Administrative Register of Kentucky

LEGISLATIVE RESEARCH COMMISSION
FRANKFORT, KENTUCKY

VOLUME 13, NUMBER 1
TUESDAY, JULY 1, 1986

IN THIS ISSUE

Administrative Regulation Review Subcommittee, July Agenda.....1

Regulation Review Procedure.....3

Emergency Regulations Now In Effect:
Corrections.....4
Human Resources.....5

As Amended:
Fish and Wildlife.....12
Human Resources.....15

Amended After Hearing:
Human Resources.....17

Proposed Amendments:
Higher Education Assistance Authority.....18
Revenue.....26
Kentucky Retirement Systems.....36
Board of Nursing Home Administrators.....41
Natural Resources - Water.....44
Justice.....48
Corrections.....52
Motor Vehicle Commission.....60
Labor - Occupational Safety and Health.....61
Human Resources.....90

Proposed Regulations Received Through June 15:
Higher Education Assistance Authority.....92
Revenue.....99
Fish and Wildlife.....100
Corrections.....101
Transportation.....102
Insurance.....104
Human Resources.....110

Minutes of the Administrative Regulation Review Subcommittee.....113

CUMULATIVE SUPPLEMENT

Locator Index - Effective Dates.....A2
KRS Index.....A4
Subject Index.....A5

UNLESS WRITTEN NOTIFICATION OF INTENT TO ATTEND A PUBLIC HEARING IS RECEIVED BY THE PROMULGATING AGENCY AT LEAST FIVE (5) DAYS BEFORE THE HEARING DATE, THE HEARING MAY BE CANCELLED.

MEETING NOTICE: The next meeting of the Administrative Regulation Review Subcommittee is July 1 and 2, 1986. For information, call 502-564-8100, ext. 312.

The **ADMINISTRATIVE REGISTER OF KENTUCKY** is the monthly advance sheets service for the 1987 Edition of **KENTUCKY ADMINISTRATIVE REGULATIONS SERVICE.**

HOW TO CITE: Cite all material in the **ADMINISTRATIVE REGISTER OF KENTUCKY** by Volume number and Page number. Example: Volume 2, Kentucky Register, page 318 (short form: 2 Ky.R. 318).

KENTUCKY ADMINISTRATIVE REGULATIONS are codified according to the following system and are to be cited by Title, Chapter and Regulation number, as follows:

Title		Chapter		Regulation
806	KAR	50	:	155
Cabinet, Department, Board or Agency		Bureau, Division, or Major Function		Specific Area of Regulation

---

ADMINISTRATIVE REGISTER OF KENTUCKY
(ISSN 0096-1493)
c 1986 Legislative Research Commission, All Rights Reserved

The Administrative Register of Kentucky is published monthly by the Legislative Research Commission, Frankfort, Kentucky 40601. Subscription rate, postpaid in the United States: $48 per volume of 12 issues, beginning in July and ending with the June issue of the subsequent year.
Second class postage paid at Frankfort, Kentucky.
POSTMASTER: Send address changes to Administrative Register of Kentucky, Room 300, State Capitol, Frankfort, Kentucky 40601.

KENTUCKY LEGISLATIVE RESEARCH COMMISSION

Chairmen

Senator Joe Prather
Senate President Pro Tem

Representative Donald J. Blandford
Speaker of the House

Senate Members

John A. "Eck" Rose
Assistant President Pro Tem

Joe Wright
Majority Floor Leader

Joe Lane Travis
Minority Floor Leader

David K. Karem
Majority Caucus Chairman

Clyde Middleton
Minority Caucus Chairman

Helen Garrett
Majority Whip

Jon W. Ackerson
Minority Whip

House Members

Pete Worthington
Speaker Pro Tem

Gregory D. Stumbo
Majority Floor Leader

Richard A. Turner
Minority Floor Leader

William "Bill" Donnermeyer
Majority Caucus Chairman

Pearl Ray LeFevers
Minority Caucus Chairman

Kenny Rapier
Majority Whip

Willard (Woody) Allen
Minority Whip

Vic Hellard, Jr. Director
Samuel L. Hensley, Assistant Director for Education and Information

ADMINISTRATIVE REGULATION REVIEW SUBCOMMITTEE

Members

Representative William Brinkley, Chairman
Senator Harold Haering
Senator William L. Quinlan
Senator Pat McCuiston
Representative James E. Bruce
Representative Edward L. Holloway
Representative Joseph U. Meyer

Staff

Susan C. Wunderlich, Regulations Compiler
June Q. Mabry
Carla Arnold
Donna Valencia
Shirley Hart
O. Joseph Hood
Gregory Karambellas

NOTE: The following agenda for the July meeting of the Administrative Regulations Review Subcommittee is subject to change. Please call (502) 564-8100, ext. 411, if you have questions.

ADMINISTRATIVE REGULATION REVIEW SUBCOMMITTEE
TENTATIVE AGENDA
July 1, 1986

EDUCATION AND HUMANITIES CABINET
Department of Education
Office of Local Services

Pupil Transportation
702 KAR 5:020. Program cost calculation.
702 KAR 5:080. Bus drivers' qualifications; responsibilities.
702 KAR 5:110. Vocational pupils, reimbursement for.
School Terms, Attendance and Operation
702 KAR 7:020. Calendar.

Office of Instruction

Instructional Services
704 KAR 3:304. Required program of studies.
704 KAR 3:320. Essential skills.
704 KAR 3:325. Effective Instructional Leadership Act.
704 KAR 3:335. State plan for the administration of Chapter 2, ECIA of 1981.
704 KAR 3:355. Essential skills remediation.
Student Services
704 KAR 7:020. Counselor; criteria and duties.
Elementary and Secondary Education Act
704 KAR 10:022. Elementary, middle and secondary schools standards.
Teacher Education
704 KAR 15:080. Paraprofessional employees and volunteer personnel.
Teacher Certification
704 KAR 20:005. Kentucky standards for preparation program approval.
704 KAR 20:045. Testing prerequisites for teacher certification; certificate application; beginning teacher internship program.
704 KAR 20:095. Elementary level on high school certification.
704 KAR 20:135. Kindergarten teachers.
704 KAR 20:222. Industrial education teachers.
704 KAR 20:305. Written examination prerequisites for teacher certification.
704 KAR 20:310. Written examination and internship prerequisites for vocational teachers.
704 KAR 20:320. Beginning teacher internship program.
704 KAR 20:330. Endorsement for individual intellectual assessment.

Office of Vocational Education

Administration
705 KAR 1:010. Three year program plan.
Fiscal Management
705 KAR 2:030. Foundation program units.

Office of Vocational Rehabilitation Services

Administration
706 KAR 1:010. Three-year plan for vocational rehabilitation services.
706 KAR 1:020. Independent living plan.

Office of Programs

Adult Education
709 KAR 1:080. State plan for community education.

SCHOOL FACILITY CONSTRUCTION COMMISSION

Commission Procedures
750 KAR 1:010. Commission procedures.

DEPARTMENT OF MILITARY AFFAIRS

National Guard
106 KAR 1:050. Educational encouragement fund.

TOURISM CABINET
Department of Fish and Wildlife Resources

Game
301 KAR 2:111. Deer and turkey hunting on special areas.

CORRECTIONS CABINET

Office of the Secretary
501 KAR 6:020 & E. Corrections policies and procedures.
501 KAR 6:030. Kentucky State Reformatory.
501 KAR 6:040. Kentucky State Penitentiary.
501 KAR 6:050. Luther Luckett Correctional Complex.
501 KAR 6:060. Northpoint Training Center.
501 KAR 6:080. Corrections Cabinet manuals.
501 KAR 6:090. Frankfort Career Development Center.

ADMINISTRATIVE REGULATION REVIEW SUBCOMMITTEE
TENTATIVE AGENDA
July 2, 1986

TRANSPORTATION CABINET

Mass Transportation

603 KAR 7:020. Nonurbanized Public Transportation Program.

PUBLIC PROTECTION AND REGULATION CABINET
Public Service Commission

Utilities

807 KAR 5:067. Purchased water adjustment for privately-owned utilities.

807 KAR 5:068. Purchased water adjustment for water districts and water associations.

Department of Housing, Buildings, and Construction

Plumbing

815 KAR 20:001. Sections declared independent.

815 KAR 20:030. License application; qualifications for examination, examination requirements, expiration, renewal, revival or reinstatement of licenses.

CABINET FOR HUMAN RESOURCES
Department for Health Services

Hospitalization of mentally Ill and Mentally Retarded

902 KAR 12:080. Policies and procedures for mental health/mental retardation facilities.

Certificate of Need and Licensure

902 KAR 20:210. General health services licensure. (Deferred from the June meeting.)

Milk and Milk Products

902 KAR 50:030. Standards for raw milk for manufacturing purposes.

902 KAR 50:050. Manufacturing plant requirements.

902 KAR 50:110. Grade A milk and milk products standards.

Department for Employment Services

Unemployment Insurance

903 KAR 5:260. Unemployment insurance procedures.

Department for Social Insurance

Medical Assistance

904 KAR 1:013 & E. Payments for acute care and mental hospital inpatient services.

904 KAR 1:036 & E. Amounts payable for skilled nursing and intermediate care facility services.

904 KAR 1:220. Terms and conditions of provider participation; provider appeals. (Amended After Hearing)

Public Assistance

904 KAR 2:016 & E. Standards for need and amount; AFDC.

904 KAR 2:020. Child support.

904 KAR 2:022. Kentucky administrative process for child support.

904 KAR 2:140 & E. Supplementary policies for programs administered by the Department for Social Insurance.

904 KAR 2:150 & E. Incorporation by reference of materials relating to the Aid to Families with Dependent Children Program.

904 KAR 2:170 & E. Incorporation by reference of materials relating to the Child Support Program.

Food Stamp Program

904 KAR 3:020 & E. Eligibility requirements.

904 KAR 3:090 & E. Incorporation by reference of materials relating to the Food Stamp Program.

Department for Social Services

Child Welfare

905 KAR 1:180 & E. DSS policy and procedures manual. (Repeals 905 KAR 1:190)

Department for Medicaid Services

Medicaid Services

907 KAR 1:004. Resource and income standard of medically needy.

907 KAR 1:028. Other laboratory and x-ray services.

907 KAR 1:250 & E. Incorporation by reference of materials relating to the Medical Assistance Program.

REGULATION REVIEW PROCEDURE

Filing and Publication

Administrative bodies shall file with the Regulations Compiler all proposed administrative regulations, including public hearing information (described below), the tiering statement required by KRS 13A.210, the regulatory impact analysis as required by KRS 13A.240, and the fiscal note required by KRS 13A.250.

All proposed administrative regulations received by the deadline required in KRS 13A.050, as well as the information required above, shall be published in the Administrative Register.

Following publication in the Administrative Register, all proposed administrative regulations shall be referred by the Legislative Research Commission to the appropriate committee or subcommittee for review.

Public Hearing

The administrative body shall schedule a public hearing on proposed administrative regulations, proposed amendments to administrative regulations, and proposed repeal of administrative regulations to be held not less than twenty (20) nor more than thirty (30) days following publication of the administrative regulation. The time, date, and place of the hearing and the name and address of the agency contact person shall be included on the last page of the administrative regulation when filed with the Compiler's office.

Any person interested in attending the scheduled hearing must submit written notification of such to the administrative body at least five (5) days before the scheduled hearing. If no written notice is received at least five (5) days before the hearing, the administrative body may cancel the hearing.

If the hearing is cancelled, the administrative body shall notify the Compiler immediately by telephone of the cancellation with a follow-up letter and the Compiler will place the letter of cancellation in the file of the original administrative regulation. If the hearing is held, the administrative body shall submit within fifteen (15) days following the hearing a statement of consideration summarizing the comments received at the hearing and the administrative body's responses to the comments.

No transcript of the hearing need be taken unless a written request for a transcript is made, and the person requesting the transcript shall have the responsibility of paying for same. A recording may be made in lieu of a transcript.

If an administrative body has several proposed administrative regulations published at the same time, the proposed administrative regulations may be grouped at the convenience of the administrative body for purposes of hearings.

Review Procedure

If a proposed administrative regulation is amended as a result of the public hearing, the amended version shall be published in the next Administrative Register; and following publication shall be sent to the appropriate committee for review at its next meeting. If a proposed administrative regulation is not amended as a result of the hearing or if the hearing is cancelled, the regulation shall be sent to the appropriate committee for review at its next meeting. The administrative regulation shall be considered as adopted and in effect as of adjournment on the day the subcommittee meets.

EMERGENCY REGULATIONS NOW IN EFFECT

(NOTE: Emergency regulations expire 90 days from publication or upon replacement or repeal.)

STATEMENT OF EMERGENCY

In order to continue to operate the Corrections Cabinet in accordance with KRS Chapter 196, the Corrections Cabinet needs to implement this emergency regulation. An ordinary administrative regulation cannot suffice because the effected agency policy must be revised as soon as possible to allow the cabinet to take immediate corrective action in the manner in which inmates are classified within the Kentucky correctional system; bring the cabinet's policy and general procedures for the searches of inmates, visitors, employees and vehicles that enter the Correction Cabinet's institutions in line with recent supreme court rulings; change the cabinet's extraordinary occurrence reporting procedure to adhere to current Kentucky Revised Statutes; provide guidance to the cabinet's institutional duty officers in their use of state vehicles and to allow the Frankfort Career Development Center to immediately implement institutional policy in preparation for a pending accreditation audit by the Commission on

Accreditation for Corrections. This emergency regulation will be replaced by the ordinary administrative regulation filed with the Legislative Research Commission on May 15, 1986 in accordance with KRS Chapter 13A.

MARTHA LAYNE COLLINS, Governor
GEORGE W. WILSON, Secretary

CORRECTIONS CABINET

501 KAR 6:020E. Corrections policies and procedures.

RELATES TO: KRS Chapters 196, 197, 439
PURSUANT TO: KRS 196.035, 197.020, 439.470, 439.590, 439.640
EFFECTIVE: May 16, 1986
NECESSITY AND FUNCTION: KRS 196.035, 197.020, 439.470, 439.590, and 439.640 authorize the secretary to adopt, amend or rescind regulations necessary and suitable for the proper administration of the cabinet or any division therein. These regulations are in conformity with those provisions.

Section 1. Pursuant to the authority vested in the Corrections Cabinet the following policies and procedures are incorporated by reference on May 15 [April 14], 1986 and hereinafter should be referred to as Corrections Policies and Procedures. Copies of the procedures may be obtained from the Office of the General Counsel, Corrections Cabinet, State Office Building, Frankfort, Kentucky 40601.
(1) The corrections policies and procedures:

1.1 Legal Assistance for Corrections Staff
1.2 News Media
1.6 Extraordinary Occurrence Reports (Amended 5/15/86)
1.9 Institutional Duty Officer (Added 5/15/86)
1.11 Population Counts and Reporting Procedures
2.1 Inmate Canteen
3.1 Code of Ethics
3.2 Inclement Weather and Emergency Conditions Policy
3.7 Employment of Relatives
3.10 Staff Clothing and Personal Appearance
3.12 Institutional Staff Housing
3.14 Corrections Cabinet Payroll Deduction Policy and Procedure
4.1 Attendance at Professional Meetings
4.2 Staff Training and Development
4.3 Firearms and Chemical Agents Training
4.4 Educational Assistance Program
6.1 Open Records Law
8.4 Emergency Preparedness
9.1 Use of Force
9.3 Transportation of Convicted Offenders
9.4 Transportation of Inmates to Funerals or Bedside Visits
9.5 Return of Escapees by Automobile
9.6 Contraband
9.7 Storage, Issue and Use of Weapons Including Chemical Agents
9.8 Search Policy (Amended 5/15/86)
9.9 Transportation of Inmates
9.10 Security Inspections
9.15 Institutional Entry and Exit Policy and Procedures
9.18 Informants
10.1 Inmates Serving a Sentence of Death
10.2 Special Management Inmates
10.3 Safekeepers
10.4 Special Needs Inmates
11.2 Nutritional Adequacy of the Diet for Inmates
11.3 Special Diet Procedures
12.1 Resident Clothing
13.1 Pharmacy Policy and Formulary
13.2 Health Maintenance Services
13.3 Medical Alert System
13.4 Health Program Audits
14.2 Personal Hygiene Items
14.3 Marriage of Inmates
14.4 Legal Services Program
14.6 Inmate Grievance Procedure (Added 4/14/86)
15.1 Hair and Grooming Standards
15.2 Offenses and Penalties
15.3 Meritorious Good Time
15.4 Governor's Meritorious Good Time Award
15.5 Restoration of Forfeited Good Time
15.6 Adjustment Procedures and Programs
16.1 General Inmate Visiting Procedure
16.2 Inmate Correspondence
16.3 Telephone Calls
17.1 Inmate Personal Property
17.2 Assessment Center Operations
17.3 Controlled Intake of Inmates
18.4 Classification of the Inmate
18.5 Custody/Security Guidelines (Amended 5/15/86)
18.6 Classification Document
18.7 Transfers
18.8 Guidelines for Transfers Between Institutions (Amended 5/15/86)
18.9 Out-of-State Transfers
18.10 Pre-Parole Progress Reports
18.11 Kentucky Correctional Psychiatric Center Transfer Procedures
18.12 Referral Procedure for Inmates Adjudicated Guilty But Mentally Ill
18.13 Population Categories
19.1 Government Services Projects
19.2 Community Services Projects
20.1 Study Release
20.6 Vocational Study Release
22.1 Privilege Trips
25.1 Gratuities
25.2 Public Official Notification of Release of an Inmate
25.3 Pre-Release
25.4 Inmate Furloughs
25.6 Community Center Program
25.7 Expedient Release
25.8 Extended Furloughs
27.1 Supervision: Case Classification
27.2 Risk/Needs Administration
27.4 Supervision Plan: General
27.8 Travel Restrictions
27.9 Conditions of Supervision
27.10 Preliminary Revocation Procedures
27.11 Apprehension and Transportation of Violators of Probation, Parole and Conditional Release
27.12 Fugitive Section/Probation and Parole
27.13 Supervision Fee
27.18 Absconder Procedures
27.19 Technical Violators
27.20 Intensive Supervision (Amended 4/14/86)
28.2 Investigations: General
28.3 Pre-Sentence Investigations (To the Court)
28.4 Pre-Parole (Pre-Sentence) Investigation (To the Institution and State Parole Board)
28.5 Special Report to the Parole Board
28.7 Out-of-State Investigations

FCDC 02-10-01 Fiscal Management and Control

(Added 5/15/86)
FCDC 02-11-01 Fiscal Management: Accounting Procedures (Added 5/15/86)
FCDC 02-12-01 Fiscal Management: Agency Funds (Added 5/15/86)
FCDC 02-13-01 Purchasing and Receiving (Added 5/15/86)
FCDC 03-01-02 Security Manual Part 1: Staff Guidelines (Added 5/15/86)
FCDC 03-10-01 Dress Code (Added 5/15/86)
FCDC 03-15-01 Travel Expense Reimbursement (Added 5/15/86)
FCDC 03-16-01 Employee Grievance Procedure (Added 5/15/86)
FCDC 03-21-01 Time and Attendance (Added 5/15/86)
FCDC 11-03-01 Food Services (Added 5/15/86)
FCDC 13-01-01 Use of Pharmaceutical Products (Added 5/15/86)
FCDC 13-10-01 Treatment Protocol Regarding First-Aid Procedures, Routine Health Care (Added 5/15/86)
FCDC 13-11-01 Health Education: Provision of Special Health Care Needs (Added 5/15/86)
FCDC 13-12-01 Physician's Clinic (Added 5/15/86)
FCDC 13-13-01 Physician Referrals, Emergency Room Visits, and Hospitalization (Added 5/15/86)
FCDC 13-14-01 Health Records (Added 5/15/86)
FCDC 13-15-01 Routine and Emergency Dental Appointments (Added 5/15/86)
FCDC 13-16-01 Routine and Emergency Eye Examinations (Added 5/15/86)
FCDC 13-17-01 Health Requirements of Food Service Workers (Added 5/15/86)
FCDC 14-04-01 Legal Services Program (Added 5/15/86)
FCDC 15-03-01 Good Time - Credits (Meritorious, Governor's and Statutory) (Added 5/15/86)
FCDC 16-02-02 Mail Policy (Added 5/15/86)
FCDC 18-04-01 Institutional Classification/ Reclassification Committee (Added 5/15/86)
FCDC 22-01-02 Activity Trips (Added 5/15/86)
FCDC 25-03-01 Release Preparation Program (Added 5/15/86)
Classification Manual (Amended 5/15/86)

GEORGE W. WILSON, Secretary
APPROVED BY AGENCY: May 15, 1986
FILED WITH LRC: May 16, 1986 at 3 p.m.

STATEMENT OF EMERGENCY

Under KRS 13A the administrative body is required to implement this regulation or not have the authority to operate. Therefore, in order to continue to operate the Cabinet for Human Resources in accordance with KRS Chapter 194, the Cabinet for Human Resources needs to implement this emergency regulation. An ordinary administrative regulation cannot suffice because agency policy will not be accurately reflected in a timely manner. This emergency regulation will be replaced by an ordinary administrative regulation in accordance with House Bill 334.

MARTHA LAYNE COLLINS, Governor
E. AUSTIN, JR., Secretary

CABINET FOR HUMAN RESOURCES

900 KAR 1:006E. Limitation on indirect administrative cost in contracts.

RELATES TO: HB 398, 1986 Acts of the General Assembly, Part I
PURSUANT TO: KRS 194.050; HB 398, 1986 Acts of the General Assembly, Part I
EFFECTIVE: May 23, 1986
NECESSITY AND FUNCTION: In accordance with its intent to focus the resources of the Cabinet for Human Resources on direct service provision and minimize indirect administrative expenses, the General Assembly, Regular Session, 1986 established a limit of fifteen (15) percent on indirect administrative cost for all contracts between the cabinet and non-state government agencies and individuals with certain exceptions. HB 398 requires the cabinet to promulgate administrative regulations which address allocation and define direct and indirect costs. This regulation sets forth definitions and provisions necessary to implement this indirect administrative cost limitation in contracts. This regulation applies to Cabinet for Human Resources contracts for the 1986-87 and 1987-88 fiscal years.

Section 1. Definitions. As used in this regulation, the following definitions shall apply unless the specific context dictates otherwise.
(1) "Direct costs" means those costs that can be identified specifically with and charged in whole or in part to a particular project, service, program or activity of an organization.
(2) "Indirect costs" means those costs of an organization which are not specifically identifiable with a particular project, service, program, or activity but nevertheless are necessary to the general operation of the organization and the conduct of the activities it performs.
(3) "Administrative activities" means those activities performed by an organization in the development and implementation of policy and the management of the organization necessary to fulfill the functions and obligations of the organization. These activities generally include, but are not limited to, agency and personnel management, accounting, auditing, and legal services.
(4) "Service activities" means those activities carried out by an organization which are integral and necessary to the production and/or delivery of specific products and/or services.
(5) "Indirect administrative costs" means those costs for administrative activities of an organization which are not specifically identifiable with a particular project, service, program, or activity.
(6) "Cost allocation plan" means the written description of processes for identification, accumulation, and distribution of costs together with the allocation methods used.

Section 2. Indirect Administrative Cost Limitation in Contracts. (1) The Cabinet for Human Resources will limit payment to contractors for indirect administrative cost to no more than fifteen (15) percent of the contract total. For the purpose of this regulation, contract total means total actual,

allowable expenses reimbursed by the cabinet.

(2) The provisions of this regulation are applicable to all types of contracts (except as exempted herein) between the cabinet and non-state government agencies and individuals including, but not limited to: cost reimbursement type contracts; competitively bid or negotiated fixed price contracts; program administration contracts; and, personal service contracts.

(3) When offering a contract for bid or negotiation, the cabinet shall clearly indicate that the state will limit its reimbursement of indirect administrative cost to no more than fifteen (15) percent of the total actual allowable expenses reimbursed by the cabinet. If total indirect administrative cost exceeds such limit, the additional expense shall be the responsibility of the contractor and not the Commonwealth.

(4) In cases where payment to a contractor is made on a fixed price/fixed fee basis and the fixed price/fixed fee is established based upon a consideration of a prior year and/or current year actual, allowable cost (e.g., regional mental health/mental retardation boards), such contracts shall be subject to the indirect administrative cost limitations set forth herein.

(5) There shall be no restrictions or limitations on indirect administrative costs paid for with contractor local funds and used to satisfy in-kind or matching requirements.

(6) In the event more restrictive contract provisions or federal and/or state laws and/or regulations apply to a particular contract, such laws, regulations, or contract provisions shall prevail with respect to limitations on indirect administrative cost.

(7) In the event that training involving contracted services and related agency skills and resources are requested by the cabinet and provided by a contractor in accordance with HB 398, costs related to such activity will be considered a direct cost and not subject to indirect administrative cost limitations.

(8) In the event an audit results in a finding that the indirect administrative cost limitations set forth herein has been exceeded for the period of performance under the contract, payment made by the cabinet to the contractor in consideration of such cost shall be subject to recovery from the contractor by the cabinet.

Section 3. Allocation Plan Required. A contractor shall maintain a written plan for allocation of direct and/or indirect costs in instances where the contractor organization operates more than one (1) project, service, program or activity. The general requirement for any cost allocation plan is that it shall provide for an equitable distribution of allocable direct costs and indirect costs to each project, service, program or activity that benefits from such costs and must be consistently and uniformly applied. Only those costs that are not specifically identifiable to a single project, service, program or other direct activity shall be allocated.

Section 4. Documentation Requirements for Costs. (1) All direct or allocable direct charges shall be documented by appropriate source documents to support the direct charging of the expense.

(2) The contractor shall document the method used to allocate direct and/or indirect costs.

(3) The contractor shall indicate the allowable indirect administrative cost amount and the percentage such amount represents in each contract budget and/or the final expenditure report as an indication of compliance.

(4) Reports of audits performed to meet federal and/or state requirements and which are conducted by independent public auditors, cabinet auditors, and/or the state auditor, shall contain a statement as to the compliance of the contractor with the cost limitations set forth herein.

Section 5. Subcontracts. In the event the primary contractor subcontracts with any non-state government agency or organization or individual pursuant to or relating to its contract with the Cabinet for Human Resources, the indirect administrative cost of the primary contractor shall not exceed fifteen (15) percent of the total actual, allowable expenses reimbursed by the cabinet excluding such subcontracted costs. The indirect administrative cost of the subcontractor shall not exceed fifteen (15) percent of the total actual, allowable expenses reimbursed by the primary contractor to the subcontractor. Exceptions to such division of indirect administrative cost between the primary contractor and the subcontractor shall be subject to case-by-case negotiation between the cabinet and the prime contractor. In such cases where an exception to the limits is deemed reasonable and justifiable, the negotiated limit(s) together with the reasons for the exception shall be expressed in the terms and conditions of the resulting contract. In no event shall combined indirect administrative cost of the prime contractor and subcontractor(s) in the aggregate exceed fifteen (15) percent of the total actual, allowable expenses reimbursed by the cabinet.

Section 6. Exceptions. Contracts which may be exempt from the fifteen (15) percent indirect administrative cost limitations contained herein are set forth below:

(1) Contracts for Medicaid benefits shall be exempt from the cost limitations set forth herein;

(2) A contract for a service which is predominantly administrative in nature may be exempted provided that:

(a) The Secretary of the Cabinet for Human Resources certifies such fact and also documents why such service cannot be performed by state employees; and,

(b) The Secretary of the Finance and Administration Cabinet concurs and authorizes such exception;

(3) A contract which is competitively solicited and/or competitively negotiated may be exempted only when such exemption results in award of the contract to the lowest priced and/or best proposal submitted by prospective contractors provided that:

(a) The Secretary of the Cabinet for Human Resources approves such exemption; and,

(b) The Secretary of the Finance and Administration Cabinet concurs and authorizes

such exemption; or,

(4) A contract which does not exceed a total amount of $100,000.00 and for which state funds comprise not less than seventy-five (75) percent of the fund sources available for such contract may be exempted from the fifteen (15) percent provided that:

(a) Combined actual allowable direct and indirect administrative costs shall not exceed twenty-five (25) percent of the total actual, allowable expenses reimbursed by the cabinet;

(b) The Secretary of the Cabinet for Human Resources approves such exemption; and,

(c) The Secretary of the Finance and Administration Cabinet concurs and authorizes such exemption.

E. AUSTIN, JR., Secretary
APPROVED BY AGENCY: May 14, 1986
FILED WITH LRC: May 23, 1986 at 8 a.m.

STATEMENT OF EMERGENCY

Under KRS Chapter 13A the administrative body is required to implement this regulation or not have the authority to operate. Therefore, in order to continue to operate the Cabinet for Human Resources in accordance with KRS Chapter 194, the Cabinet for Human Resources needs to implement this emergency regulation. An ordinary administrative regulation cannot suffice because agency policy will not be accurately reflected in a timely manner. This emergency regulation will be replaced by an ordinary administrative regulation in accordance with House Bill 334.

MARTHA LAYNE COLLINS, Governor
E. AUSTIN, JR., Secretary

CABINET FOR HUMAN RESOURCES
Department for Social Insurance
Division of Management and Development

904 KAR 2:016E. Standards for need and amount; AFDC.

RELATES TO: KRS 205.200(2), 205.210(1)
PURSUANT TO: KRS 205.200(2)
EFFECTIVE: May 16, 1986

NECESSITY AND FUNCTION: The Cabinet for Human Resources is required to administer the public assistance programs. KRS 205.200(2) and 205.210(1) require that the secretary establish the standards of need and amount of assistance for the Aid to Families with Dependent Children Program, hereinafter referred to as AFDC, in accordance with federal regulations and Title IV-A of the Social Security Act. This regulation sets forth the standards by which the need for and the amount of an AFDC assistance payment is established.

Section 1. Definitions. (1) "Assistance group" is composed of one (1) or more children and may include as specified relative any person specified in 904 KAR 2:006, Section 3. The assistance group shall include the dependent child, child's eligible parent(s), and all eligible siblings living in the home with the needy child. Additionally, if the dependent child's parent is a minor living in the home with his/her eligible parent(s), the minor's parent(s) shall also be included in the assistance group if the minor's parent applied for assistance. The incapacitated natural or adoptive parent of the child(ren) who is living in the home [and legally married to the specified relative] shall be included as second parent if the technical eligibility factors are met.

(2) "Sanctioned individual" means any person who is required to be included in the assistance group but who is excluded from the assistance group due to failure to fulfill an eligibility requirement.

(3) [(2)] "Full-time employment" means employment of thirty (30) hours per week or 130 hours per month or more.

(4) [(3)] "Part-time employment" means employment of less than thirty (30) hours per week or 130 hours per month or not employed throughout the entire month.

(5) [(4)] "Full-time school attendance" means a workload of at least:

(a) Twenty-five (25) clock hours per week in a General Educational Development (GED) program; or

(b) Twelve (12) semester hours or more in a college or university; or six (6) semester hours or more during the summer term; or the equivalent in a college or university if other than a semester system is used; or

(c) The number of hours required by the individual high school/vocational school to fulfill their definition of full time.

(6) [(5)] "Part-time school attendance" means a workload of anything less than "full-time school attendance."

(7) [(6)] "Gross income limitation standard" means 185 percent of the sum of the assistance standard, as set forth in Section 8 of this regulation, and any educational allowance as set forth in Section 9 of this regulation.

(8) [(7)] "Prospective budgeting" means computing the amount of assistance based on income and circumstances which will exist in the month(s) for which payment is made.

(9) [(8)] "Recoupment" means recovery of overpayments of assistance payments.

(10) [(9)] "Retrospective budgeting" means computing amount of assistance based on actual income and circumstances which existed in the second month prior to the payment month.

Section 2. Resource Limitations. Real and personal property owned in whole or in part by an applicant or recipient including sanctioned individual(s) and his/her parent(s), even if the parent(s) is not an applicant or recipient, if the applicant/recipient is a dependent child living in the home of said parent, shall be considered. The amount that can be reserved by each assistance group shall not be in excess of $1,000 equity value excluding those items specifically listed in subsection (1) as follows:

(1) Excluded resources. The following resources shall be excluded from consideration:

(a) One (1) owner-occupied home;

(b) Home furnishings, including all appliances;

(c) Clothing;

(d) One (1) motor vehicle, not to exceed $1,500 equity value;

(e) Farm machinery, livestock or other inventory, and tools and equipment other than farm, used in a self-employment enterprise;

(f) Items valued at less than fifty (50) dollars each;

(g) One (1) burial plot/space per family

member;

(h) Funeral agreements not to exceed maximum equity of $1,500 per family member;

(i) Real property which the assistance group is making a good faith effort to sell. This exemption shall not exceed a period of nine (9) months and is contingent upon the assistance group agreeing to repay AFDC benefits received beginning with the first month of the exemption. Any amount of AFDC paid during that period that would not have been paid if the disposal of property had occurred at the beginning of the period is considered an overpayment. The amount of the repayment shall not exceed the net proceeds of the sale. If the property has not been sold within the nine (9) months, or if eligibility stops for any other reason, the entire amount of assistance paid during the nine (9) month period shall be treated as an overpayment;

(j) Other items/benefits mandated by federal regulations.

(2) Disposition of resources. An applicant/recipient must not have transferred or otherwise divested himself/herself of property without fair compensation in order to qualify for assistance. If the transfer was made expressly for the purpose of qualifying for assistance and if the uncompensated equity value of the transferred property, when added to total resources, exceeds the resource limitation, the household's application shall be denied, or assistance discontinued. The time period of ineligibility shall be based on the resulting amount of excess resources and begins with the month of transfer. If the amount of excess transferred resources does not exceed $500, the period of ineligibility shall be one (1) month; the period of ineligibility shall be increased one (1) month for every $500 increment up to a maximum of twenty-four (24) months.

Section 3. Income Limitations. In determining eligibility for AFDC the following will apply:

(1) Gross income test. The total gross non-AFDC income of the assistance group, as well as income of parent(s), sanctioned individuals and/or amount deemed available from the parent(s)/legal guardian(s) of a minor parent/legal guardian living in the home with such assistance group, and/or amount deemed available from a stepparent(s) living in the home, and/or amount deemed available from an alien's sponsor and sponsor's spouse if living with the sponsor, shall not exceed the gross income limitation standard. Disregards specified in Section 4, subsection (1), shall apply. If total gross income exceeds the gross income limitation standard, the assistance group is ineligible.

(2) Applicant eligibility test. If the gross income is below the gross income limitation standard and the assistance group has not received assistance during the four (4) months prior to the month of application, the applicant eligibility test shall be applied. The total gross income after application of exclusions/disregards set forth in Section 4, subsections (1) and (2), shall be compared to the assistance standard set forth in Section 8. If income exceeds this standard, the assistance group is ineligible. For assistance groups who meet the gross income test but who have received assistance any time during the four (4) months prior to the application month, the applicant eligibility test shall not apply.

(3) Benefit calculation. If the assistance group meets the criteria set forth in subsections (1) and (2) of this section, benefits shall be determined by applying disregards in Section 4, subsections (1), (2), and (3). If the assistance group's income, after application of appropriate disregards, exceeds the assistance standard, the assistance group is ineligible. Amount of assistance for the initial two (2) months of eligibility shall be determined prospectively in accordance with 45 CFR 233.34 and for subsequent months retrospectively, in accordance with 45 CFR 233.35.

(4) A period of ineligibility shall be established in accordance with 45 CFR 233.20(a)(3)(ii)(F), for applicants/recipients whose income in the month of application or during any month for which assistance is paid exceeds the limits as set forth in subsections (2) or (3) of this section due to receipt of lump sum income. The ineligibility period shall be recalculated if any of the following circumstances occur:

(a) The standard of need increases and the amount of grant the assistance group would have received also changes.

(b) The income received has become unavailable to the assistance group for reasons beyond their control.

(c) The assistance group incurs and pays medical expenses in accordance with 42 CFR 435.831(C).

Section 4. Excluded/Disregarded Income. All gross non-AFDC income received or anticipated to be received by the assistance group, natural parent(s) and/or parent(s)/legal guardian(s) of a minor parent/legal guardian living in the home with such assistance group and/or stepparent(s) living in the home, shall be considered with the applicable exclusions/disregards as set forth below:

(1) Gross income test. All incomes listed below shall be excluded/disregarded:

(a) Disregards applicable to stepparent income and/or income of the parent(s)/legal guardian(s) of a minor parent/legal guardian living in the home with the assistance unit, as set forth in Section 5 of this regulation;

(b) Disregards applicable to alien sponsor's income, as set forth in Section 6 of this regulation;

(c) Disregards applicable to self-employment income, as set forth in 45 CFR 233.20(a)(6)(v)(B) and 45 CFR 233.20(a)(11)(i)(b)(1)(i);

(d) Work Incentive Program (WIN) incentive payments;

(e) Earnings received by a dependent child from participation in the Summer Youth Program under the Job Training Partnership Act (JTPA) for a period not to exceed six (6) months within a given year;

(f) Unearned income received by a dependent child from participation in a JTPA program;

(g) Reimbursement for training-related expenses made by a manpower agency to applicants or recipients in institutional and work experience training programs under the WIN program;

(h) Value of the monthly allotment of food

stamp coupons or value of United States Department of Agriculture (USDA) donated foods;

(i) Non-emergency medical transportation payments;

(j) Principal of loans;

(k) Educational grants, loans, scholarships, including payments for actual educational costs made under the GI Bill, obtained and used under conditions that preclude their use for current living costs and all education grants and loans to any undergraduate made or insured under any program administered by the United States Commissioner of Education;

(l) Highway relocation assistance;

(m) Urban renewal assistance;

(n) Federal disaster assistance and state disaster grants;

(o) Home produce utilized for household consumption;

(p) Housing subsidies received from federal, state or local governments;

(q) Receipts distributed to members of certain Indian tribes which are referred to in Section 5 of Public Law 94-114 that became effective October 17, 1975;

(r) Funds distributed per capita to or held in trust for members of any Indian tribe under Public Law 92-254, Public Law 93-134 or Public Law 94-540;

(s) Benefits received under Title VII, Nutrition Program for the Elderly, of the Older Americans Act of 1965, as amended;

(t) Payments for supporting services or reimbursement of out-of-pocket expenses made to individual volunteers serving as foster grandparents, senior health aides, or senior companions, and to persons serving in Service Corps of Retired Executives (SCORE) and Active Corps of Executives (ACE) and any other programs under Titles II and III, pursuant to Section 418 of Public Law 93-113;

(u) Payments to volunteers under Title I of Public Law 93-113 pursuant to Section 404(g) of Public Law 93-113 <u>except when the value of such payments when adjusted to reflect the number of hours volunteers are serving is the same as or greater than the minimum wage under state or federal law, whichever is greater</u>;

(v) The value of supplemental food assistance received under the Child Nutrition Act of 1966, as amended, and the special food service program for children under the National School Lunch Act, as amended;

(w) Payments from the Cabinet for Human Resources, Department for Social Services, for child foster care, adult foster care, or subsidized adoption;

(x) <u>Payments made under the Low Income Home Energy Assistance Act (LIHEAP) and other</u> energy assistance payments which are permitted to be excluded pursuant to 45 CFR 233.53 (c)(5)(i);

(y) The first fifty (50) dollars of child support payments collected in a month which represents the current month's support obligation and is returned to the assistance group; and

(z) For a period not to exceed six (6) months within a given year, earnings of a dependent child in full-time school attendance.

(2) Applicant eligibility test. The exclusions/disregards set forth in subsection (1) of this section and those listed below shall be applied:

(a) Earnings received from participation in the Job Corps Program under JTPA by an AFDC child;

(b) Earnings of a dependent child in full-time school attendance for a period not to exceed six (6) months within a given year;

(c) Standard work expense deduction of seventy-five (75) dollars for full-time and part-time employment; and

(d) Child care, for a child(ren) or incapacitated adult living in the home and receiving AFDC, is allowed as a work expense is allowed not to exceed $160 per month per individual for full-time employment or $110 per month per individual for part-time employment.

(3) Benefit calculation. After eligibility is established, exclude/disregard all incomes listed in subsections (1) and (2), as well as:

(a) Child support payments assigned and actually forwarded or paid to the department; and

(b) First thirty (30) dollars and one-third (1/3) of the remainder of each individual's earned income not already disregarded, if that individual's needs are considered in determining the benefit amount. The one-third (1/3) portion of this disregard shall not be applied to an individual after the fourth consecutive month it has been applied to his/her earned income. The thirty (30) dollar portion of this disregard shall be applied concurrently with the one-third (1/3) disregard, however, it shall be extended for an additional eight (8) months following the four (4) months referenced in the preceding sentence. These disregards shall be applied in accordance with 45 CFR 233.20(a)(11)(i)(D) and 45 CFR 233.20(a)(11)(ii)(B) and shall not be available to the individual until he/she has not been a recipient for twelve (12) consecutive monhs; and

(c) Earnings of a child in full-time school attendance or earnings of a child in part-time school attendance, if not working full-time.

(4) Exceptions. Disregards from earnings in subsection (2)(c) and (d) and subsection (3)(b) shall not apply for any month in which the individual:

(a) Reduces, terminates, or refuses to accept employment within the period of thirty (30) days preceding such month, unless good cause exists as follows:

1. The individual is unable to engage in such employment or training for mental or physical reasons; or

2. The individual has no way to get to and from the work site or the site is so far removed from the home that commuting time would exceed three (3) hours per day; or

3. Working conditions at such job or training would be a risk to the individual's health or safety; or

4. A bona fide offer of employment at a minimum wage customary for such work in the community was not made.

(b) Fails to make a timely report of earnings unless good cause exists as follows:

1. The assistance group moved and reported the move timely, however, the move resulted in a delay in receiving or failure to receive the mandatory monthly report form; or

2. An immediate family member living in the home was institutionalized or died during the filing period; or

3. The specified relative was out of town during the entire filing period; or

4. The assistance group has been directly

affected by a natural disaster (i.e., fire, flood, storm, earthquake).

(c) Requests assistance be terminated for the primary purpose of evading the four (4) month limitation on the deduction in subsection (3)(b) of this section.

(5) Sanction exception. The earned income of sanctioned individuals shall be counted without providing the exclusion/disregards in either subsections (2) and (3) of this section.

Section 5. Income and Resources. Income and resources of a stepparent living in the home with a dependent child and/or parent(s)/legal guardian(s) living in the home with a minor parent/legal guardian but whose needs are not included in the grant are considered as follows:

(1) Income. The gross income is considered available to the assistance group, subject to the following exclusions/disregards:

(a) The first seventy-five (75) dollars of the gross earned income for full-time employment and/or the first seventy-four (74) [forty (40)] dollars of the gross earned income for part-time employment;

(b) An amount equal to the AFDC assistance standard for the appropriate family size, for the support of the stepparent or parent(s)/legal guardian(s) of a minor parent/legal guardian and any other individuals living in the home but whose needs are not taken into consideration in the AFDC eligibility determination and are or could be claimed by the stepparent or parent(s)/legal guardian(s) of a minor parent/legal guardian as dependents for purposes of determining his/her federal personal income tax liability;

(c) Any amount actually paid by the stepparent or parent(s)/legal guardian(s) of a minor parent/legal guardian to individuals not living in the home who are or could be claimed by him/her as dependents for purposes of determining his/her personal income tax liability;

(d) Payments by the stepparent and/or parent(s)/legal guardian(s) of a minor parent/legal guardian for alimony or child support with respect to individuals not living in the household; and

(e) Income of a stepparent and/or parent(s)/legal guardian(s) of a minor parent/legal guardian receiving Supplemental Security Income (SSI) under Title XVI.

(2) Sanction exception. The needs of any sanctioned individual are not eligible for the exclusion(s) listed in this section.

(3) [(2)] Resources. Resources which belong solely to the stepparent and/or parent(s)/legal guardian(s) of a minor parent/legal guardian are not considered in determining eligibility of the parent or the assistance group.

Section 6. Alien Income and Resources. The gross non-AFDC income and resources of an alien's sponsor and sponsor's spouse (if living with the sponsor) hereinafter referred to as sponsor shall be deemed available to the alien(s), subject to disregards as set forth below, for a period of three (3) years following entry into the United States. If an individual is sponsoring two (2) or more aliens, the income and resources shall be prorated among the sponsored aliens. A sponsored alien is ineligible for any month in which adequate information on the sponsor/sponsor's spouse is not provided. If an alien is sponsored by an agency or organization, which has executed an affidavit of support, that alien is ineligible for benefits for a period of three (3) years from date of entry into the United States, unless it is determined that the sponsoring agency or organization is no longer in existence or does not have the financial ability to meet the alien's needs. The provisions of this section shall not apply to those aliens identified in 45 CFR 233.51(e).

(1) Income. The gross income of the sponsor is considered available to the assistance group subject to the following disregards:

(a) Twenty (20) percent of the total monthly gross earned income, not to exceed $175;

(b) An amount equal to the AFDC assistance standard for the appropriate family size of the sponsor and other persons living in the household who are or could be claimed by the sponsor as dependents in determining his/her federal personal income tax liability, and whose needs are not considered in making a determination of eligibility for AFDC;

(c) Amounts paid by the sponsor to non-household members who are or could be claimed as dependents in determining his/her federal personal tax liability;

(d) Actual payments of alimony or child support paid to non-household members; and

(e) Income of a sponsor receiving SSI or AFDC.

(2) Resources. Resources deemed available to the alien(s) shall be the total amount of the resources of the sponsor and sponsor's spouse determined as if he/she were an AFDC applicant in this state, less $1,500.

Section 7. Earned Income Tax Credit (EITC). In the case of an applicant or recipient of AFDC, EITC payments shall be considered as earned income when received.

Section 8. Assistance Standard. The AFDC assistance standard, including amounts for food, clothing, shelter, utilities and non-medical transportation from which countable income is deducted in determining eligibility for and the amount of the AFDC assistance payment, is as follows:

Number of Eligible Persons	Monthly Standard
1 Child	$140
2 Persons	$170
3 Persons	$197
4 Persons	$246
5 Persons	$288
6 Persons	$325
7 or more Persons	$362

Section 9. Educational Allowance. An educational allowance shall be included in the assistance standard each month at the request of the caretaker relative, if the criteria in subsection (1) of this section are met and verified for said month(s) and funds are available. Households receiving the educational allowance shall be subject to time frames, procedures, and penalties established for households required to report monthly.

(1) Technical requirements. The following requirements must be met during any month for

which an education allowance is paid.

(a) The caretaker relative must be included in the assistance grant;

(b) The caretaker relative must be enrolled full time, as defined in Section 1, in high school (including primary and secondary), vocational school, or a General Educational Development (GED) program for which no wage or child care allowance is received. If attending college, the caretaker relative must be enrolled either full or part-time, as defined in Section 1;

(c) A cost must have been incurred for the care of a child(ren) who is/are under the age of thirteen (13) or a child(ren) who is/are under the age of eighteen (18), if a physician determines said child is unable to attend school due to a physical or mental disability, and is/are included in the assistance grant; and

(d) The payment for child care is made to a provider who is not a household member.

(2) Educational allowance payment standards. The amount of monthly educational allowance payment shall be based on the number of eligible children for whom care is being provided and whether or not enrollment is full or part-time. The payment standards are as follows:

Number of Children	Full-time Enrollment	Part-time Enrollment
1	$120	$70
2 or more	$150	$90

(3) Limitations. The number of months an educational allowance payment is made shall be limited according to the type of program in which the student enrolls and shall not be provided beyond completion of one (1) program at each level.

(a) High school level.

1. A student may change programs within this level, however, the cumulative number of months payment is made shall not exceed the maximum for the program in which the student last enrolls as follows:

Type of Program	Maximums
General Educational Development (GED)	12 months
High School (includes primary and secondary)	24 months

2. A student wishing to continue his/her education past the high school level may be eligible for additional payments not to exceed the maximums for the post-high school level.

(b) Post-high school level. A student may change programs within this level, however, the cumulative number of months payment is made shall not exceed the maximum for the program in which the student last enrolls as follows:

Type of Program	Maximums
Vocational School	24 months
College/University	50 months

Section 10. Recoupment. The following provisions are effective for all overpayments discovered on or after April 1, 1982, regardless of when the overpayment occurred.

(1) Necessary action will be taken promptly to correct and recoup any overpayments.

(2) Overpayments, including assistance paid pending hearing decisions, shall be recovered:

(a) The overpaid assistance unit;

(b) Any assistance unit of which a member of the overpaid assistance unit has subsequently become a member; or

(c) Any individual member of the overpaid assistance unit whether or not currently a recipient.

(3) Overpayments shall be recovered through:

(a) Repayment by the individual to the cabinet; and/or

(b) Reduction of future AFDC benefits, which shall result in the assistance group retaining, for the payment month, family income and liquid resources of not less than ninety (90) percent of the amount of assistance paid to a like size family with no income in accordance with Section 8; and/or

(c) Civil action in the court of appropriate jurisdiction.

(4) Overpayments may be waived for inactive non-fraud cases involving less than thirty-five (35) dollars in overpayment.

(5) In cases which have both an overpayment and an underpayment, the cabinet shall offset one against the other in correcting the payment to current recipients.

(6) Neither reduction in future benefits nor civil action shall be taken except after notice and an opportunity for a fair hearing is given and the administrative and judicial remedies have been exhausted or abandoned in accordance with Title 904, Chapter 2.

Section 11. Provisions contained in this regulation shall become effective May 16, 1986 [October 1, 1984].

JACK F. WADDELL, Commissioner
E. AUSTIN, JR. Secretary
APPROVED BY AGENCY: May 6, 1986
FILED WITH LRC: May 16, 1986 at 3 p.m.

STATEMENT OF EMERGENCY

Under KRS Chapter 13A the administrative body is required to implement this regulation or not have the authority to operate. Therefore, in order to continue to operate the Cabinet for Human Resources in accordance with KRS Chapter 194, the Cabinet for Human Resources needs to implement this emergency regulation. An ordinary administrative regulation cannot suffice because agency policy will not be accurately reflected in a timely manner. This emergency regulation will be replaced by an ordinary administrative regulation in accordance with KRS Chapter 13A.

MARTHA LAYNE COLLINS, Governor
E. AUSTIN, JR., Secretary

CABINET FOR HUMAN RESOURCES
Department for Social Services
Division for Field Services

905 KAR 1:180E. DSS policy and procedures manual.

RELATES TO: KRS 194.030(8), 194.060, 199.011 to 199.375, 199.420 to 199.990, 200.080 to 200.120, 205.201 to 205.204, 205.455 to 205.465, Chapters 208 and 209

PURSUANT TO: KRS 194.050, 199.420, 200.080, 209.030
EFFECTIVE: May 16, 1986
NECESSITY AND FUNCTION: P.L. 97-35, "Block Grants for Social Services - Title XX," authorizes grants to states for social services. KRS 194.050 authorizes the Cabinet for Human Resources to adopt such rules and regulations as are necessary to implement programs mandated by federal law, or to qualify for receipt of federal funds and as are necessary to cooperate with federal agencies for the proper administration of the cabinet and its programs. The function of this manual is to implement a statewide social services program.

Section 1. DSS Policies and Procedures Manual. For the purpose of implementing and enforcing those sections of the Kentucky Revised Statutes relating to social service programs for children and adults that apply to the Department for Social Services, the Secretary of the Cabinet for Human Resources hereby adopts, by reference, the Department for Social Services' Policy and Procedural Manual as revised through April, 1986 [March, 1986], as the current policies and procedures of that department. The manual contains policies and procedures relating to management procedures, adult services, support services, family and children's services, and youth services. The Department for Social Services' Policy and Procedures Manual may be reviewed in any departmental field office located in each of the 120 counties or at the Office of the Commissioner, Department for Social Services, 275 East Main Street, Frankfort, Kentucky, during regular working hours.

Section 2. Summary of Amendment. In Chapter V, Youth Services, Community Based, Revocation of Supervised Placement, strike pages 20 through 23 dated 6/84, and insert in lieu thereof Chapter V, Youth Services, Community Based, Revocation of Supervised Placement, pages 20 through 23 dated 4/86 which revises the procedures for the revocation hearings process. Revisions include: changing the definition of "Chairperson;" changing Juvenile Court Liaison to Juvenile Specialist and Field Office Supervisors to Family Services Office Supervisor; transportation shall be provided by appropriate staff if another source of transportation is unavailable; and rather than the Deputy Commissioner and Director of the Division of Program Management being standing chairpersons, the Commissioner will name one (1) member of the Hearing Board as Chairperson. [In Chapter V, Youth Services, insert the following as Section A: Table of Contents; Section A., General Policies and Procedures; Section A.1., Admissions; Section A.2., Treatment Services; Section A.3., Health, Medical, Safety, and Dietary Services; Section A.4., Quality Assurance; Section A.5., Training; and Section A.6., Education Services. This section sets forth operating policies and procedures for youth services provided by the Department for Social Services, Division of Children's Residential Services.]

Section 3. 905 KAR 1:190, Conduct of hearings for revocation of supervised placement, is hereby repealed.

ANNA GRACE DAY, Commissioner
E. AUSTIN, JR., Secretary
APPROVED BY AGENCY: May 8, 1986
FILED WITH LRC: May 16, 1986 at 3 p.m.

AS AMENDED

TOURISM CABINET
Department of Fish and Wildlife Resources
(As Amended)

301 KAR 2:047. Specified areas; seasons, limits for birds and small game.

RELATES TO: KRS 150.010, 150.025, 150.170, 150.175, 150.176, 150.330, 150.340, 150.360, 150.370
PURSUANT TO: KRS 13A.350, 150.025
EFFECTIVE: June 10, 1986
NECESSITY AND FUNCTION: This regulation pertains to the hunting seasons, bag and possession limits for upland game birds and animals on specified wildlife management areas and refuges. This regulation is necessary for the continued protection of the species listed herein, and to insure a permanent and continued supply of the wildlife resource for the purpose of furnishing sport and recreation for present and future residents of the state. The function of this regulation is to provide for the prudent taking of upland game birds and animals within reasonable limits based upon an adequate supply. This amendment is necessary because of changes in season dates and the opening or closure of certain wildlife management areas to hunting.

Section 1. All statewide and specified area regulations, seasons, bag and possession limits apply to the following wildlife management areas and refuges unless exceptions are listed herein.

Section 2. The following wildlife management areas are closed to all hunting at all times except for deer and turkey hunting as authorized by other applicable regulations:
(1) That portion of Grayson Wildlife Management Area east of the Little Sandy River and Bruin Creek portions of Grayson Lake.
[(2) That portion of Mill Creek Wildlife Management Area west of State Route 290.]
(2) [(3)] Robinson Forest Wildlife Management Area in Breathitt, Perry and Knott Counties.

Section 3. Exceptions to Statewide Small Game Hunting Regulations for Wildlife Management Areas and Refuges. (1) West Kentucky Wildlife Management Area located in McCracken County.
(a) Quail: November 1 through January 31 on Tracts 2, 3, 6 and 7.
(b) Rabbit: November 1 through January 31 on Tracts 2, 3, 6 and 7. December 22 through 31 on

Tract 5 and January 1 through 10 on Tract 4.

(c) Squirrel (gray and fox): From opening of statewide season through October 31 on Tracts 1, 2, 3, 4, 5 and 6. November 1 through December 31 on Tract 6 only.

(d) Raccoon and opossum: [November 21 through January 31 on] Tracts 1 through 6 only.

(e) All hunters and dog trainers must check in and out daily at the designated check station.

(f) All tracts designated by numbers followed by the letter "A" are closed to gun hunting.

(g) Weapon restrictions: No rifles, or ball or slug ammunition of any type shall be permitted for taking small game on this area.

(h) [Dog training:] Dog training is closed March 15 through August 31 excepting permitted field trials. [permitted on all tracts September 1 through April 30 only. Night training is permitted on Tracts 1 through 6 November 21 through January 31 only.]

(i) Tract 6 is closed to vehicular traffic March 1 through April 16.

(2) Land Between the Lakes Wildlife Management Area located in Trigg and Lyon Counties. Areas open to hunting for the following species are located north of the state line to Barkley Canal, except that no hunting is allowed in developed public use areas, safety zones and posted areas unless otherwise noted.

(a) Squirrel (gray and fox): From opening of statewide season through September 30; December 1 [November 30] through January 31; and October 1 [2] through November 11 only by legally licensed and equipped deer archery hunters.

(b) Quail: December 1 [November 30] through the last day of February.

(c) Rabbit: December 1 [November 30] through the last day of February.

(d) Raccoon and opossum: Tuesday, Friday and Saturday nights only during the period December 1 [November 30] through January 31. Daily bag limit one (1) person per night. Raccoon and opossum hunters must check in and out nightly at designated check station. Harvest report cards must be displayed in vehicle windshield while hunting and submitted at the check station upon completion of each night's hunt. Season will be closed in some hunt areas on dates listed in the LBL Hunting Guide.

(e) Field [Raccoon field] trials: September 1 through October and November 30 through March 31. Scheduled basis only. Written requests must be received by Land Between the Lakes at least ten (10) days prior to the proposed hunt date. Approval must be obtained from Land Between the Lakes and the Department of Fish and Wildlife Resources District Supervisor. Field trials must be recognized club hunts and each participant must be on a club roster for that hunt.

(f) Fox chasing: From sunset to sunrise; third Saturday in August through October 1 south of Highway 68 to state line.

(g) Gray fox [and coyote] taking: Daylight hours only; gun and archery on December 1 [November 30] through January 31 [February]. [October 2 through November 11 only by legally licensed and equipped deer archery hunters. Coyotes may be taken during any quota deer hunt by legally licensed and equipped quota deer hunters.]

(h) Woodchuck [and coyote]: [Hunting during] Daylight hours only. March 15 through March 31. All harvested animals must be removed from the area. October 1 [2] through November 11 and December 13 [14] through December 31 only by legally licensed and equipped deer archery hunters. Gun hunting is prohibited in Hunt Area 8 and in that portion of Hunt Area 9 designated as the ORV area.

(i) Coyote: Daylight hours only by legally licensed hunters during any open season with weapons specified for that season.

(j) [(i)] Bird dog, [and] beagle and raccoon hound training season: During the entire month of October [in Hunt Area 8 only]. Bird dogs and beagles in Hunt Area 8 only. Raccoon hounds in Hunt Area 9 only.

(k) [(j)] All dogs[, while hunting,] must wear a collar bearing the owner's name, address, and telephone number. Dogs may not be used for hunting October 1 [2] through November 11, except in authorized field trials and designated dog training Hunt Areas.

(l) [(k)] Trapping for furbearers:

1. Only those persons who are selected by a drawing are permitted to trap furbearers on Land Between the Lakes.

2. Authorized trappers may trap in assigned areas only and must report their harvest in accordance with Land Between the Lakes instructions.

3. Trapping season: December 28 [22] through January 11 [December 29] for all furbearers.

4. Trapping devices: [Land sets are restricted to] No. 3 or smaller foot-hold [smooth-jawed leghold] traps[, No. 220 or smaller Conibear-type traps,] and live traps are permitted [or snares]. The jaws of No. 1 1/2 and larger foot-hold [leghold] traps used on land must be offset three-sixteenths (3/16) inch or be of the soft catch-type trap. Water sets are restricted to No. 3 or smaller foot-hold [smooth-jawed leghold] traps, No. 330 or smaller Conibear-type traps, and snares.

5. Weapons restrictions: The use of crossbows, center-fire rifles, center-fire handguns, and shotguns with slugs or shot larger than BBs is prohibited for the taking of all species listed in this subsection except that woodchucks [and coyotes] may be taken with center-fire rifles during the specified spring season.

(3) Reelfoot National Wildlife Refuge located in Fulton County.

(a) Squirrel (gray and fox): Fourth Saturday in August through October 15 only in areas designated by signs as open to public hunting.

(b) Raccoon: Four (4) consecutive nights beginning on the last Wednesday in September and four (4) consecutive nights beginning on the first Wednesday in October on the Long Point Refuge unit, with hunting allowed only during the hours of 7:30 p.m. to 12:00 midnight. No bag or possession limits.

(c) Hunters are required to check in and out at designated check stations.

(d) No other hunting is permitted except as authorized by other applicable regulations.

(4) Ballard County Wildlife Management Area located in Ballard County.

(a) Areas designated by signs are closed to hunting. [Squirrel (gray and fox): From opening of statewide season through October 14 on the whole management area except for designated areas that will be closed.]

(b) [All statewide hunting seasons, bag and possession limits apply only to] The wooded area south of Terrell Landing Road and designated by signs reading "Wildlife Management Area for

Public Hunting" is open in conjunction with statewide seasons.

(5) Central Kentucky Wildlife Management Area located in Madison County.

[(a) Squirrel (gray and fox): From opening of statewide season through October 14.]

(a) [(b)] This area is closed to all hunting except dove [(see statewide dove regulation)] and squirrel.

(b) Dog training is closed March 15 through August 31 excepting permitted field trials.

[(c) Trapping, with the authorization of the area manager, is permitted.]

[(d) Dog training and scheduled field trials are permitted.]

(6) Curtis Gates Lloyd Wildlife and Recreation Area located in Grant County. [Areas closed to hunting are designated by refuge signs. All statewide hunting seasons apply to remainder of the area.]

(a) Areas closed to hunting are designated by refuge signs.

(b) Dog training is closed March 15 through August 31 excepting permitted field trials.

(7) Pioneer Weapons Wildlife Management Area located in Bath and Menifee Counties. Hunters on this area are restricted to pioneer weapons only. These include muzzle-loading rifles, muzzle-loading pistols, muzzle-loading shotguns, longbows and crossbows. Muzzle-loading shotguns for taking squirrels, quail, grouse and rabbits must not use shot larger than No. 2 in size.

(8) Fort Campbell Wildlife Management Area located in Christian and Trigg Counties. There will be no hunting on Mondays or Tuesdays except when Monday or Tuesday is a federal holiday or as follows: December 22-23 and 29-30 [23, 24, 30, and 31, then hunting will be permitted]. There will be no hunting on December 25 and January 1.

(a) Seasons, bag and possession limits:

1. Squirrel (gray and fox): August 16 [17] through September 26 [27], November 26 [27] through December 12 [13], December 13 [14] through 31 on selected areas[; January 2 through 31].

2. Quail: November 26 [27] through December 12 [13], December 13 [14] through 31 on selected areas; January 2 through February 28.

3. Rabbit: November 26 [27] through December 12 [13], December 13 [14] through 31 on selected areas; January 2 through February 28; bag limit five (5); possession limit ten (10).

4. Raccoon, gray fox and opossum: Taking with gun and/or dogs, November 26 [27] through December 12 [13], December 13 [14] through 31 on selected areas. January 2 through 31; limit one (1) per person.

5. [Gray fox,] Coyote and woodchuck: May 3 [4] through August 15 [16] and during any other authorized hunt.

6. Red fox: November 26 [27] through December 12 [13], December 13 [14] through 31 on selected areas. January 2 through 31.

(b) Permission must be obtained for each hunt at building #6645 and hunters must stay within their assigned area. A hunting permit costing fifteen (15) dollars is required [and is good for all species hunting for the season].

(c) All hunters between the ages of twelve (12) and eighteen (18) must possess a valid hunter safety certificate.

(9) Clay Wildlife Management Area located in Nicholas County.

(a) Quail and rabbit: November 1 through January 31.

(b) Grouse: October 1 [15] through January 15 [31].

(c) All hunters and dog trainers must check in and out daily at the designated check station.

(d) Dog training is closed March 15 through August 31. [Closed to the training of all dogs March 1 through July 31.]

(10) Pine Mountain Wildlife Management Area located in Letcher County is closed to training of all dogs March 15 [1] through August 31 [July 31].

(11) Redbird Wildlife Management Area located in Leslie and Clay Counties, **Beaver Creek Management Area located in McCreary and Pulaski Counties** and Dewey Lake Wildlife Management Area in Floyd County.

(a) Squirrel (gray and fox); Open September 1 through September 30 and December 8 through December 31 only. [, grouse, quail, raccoon, and rabbit hunting and trapping for furbearers are permitted from the third Thursday in November through December 4.]

(b) Grouse, quail, raccoon, and rabbit hunting and trapping for furbearers: December 8 through December 31 only. [Firearms: Only shotguns incapable of holding more then three (3) shells are permitted.]

(c) Dog training: December 8 through December 31 only. [This area is closed to all other hunting except deer and turkey as authorized by other applicable regulations.]

(d) Firearms: Shotguns only.

(e) Closed to all other hunting except deer and turkey as authorized by other applicable regulations.

(12) [Beaver Creek Wildlife Management Area located in McCreary and Pulaski Counties;] Mill Creek Wildlife Management Area located in Jackson County; Cane Creek Wildlife Management Area located in Laurel County; [Paintsville Lake Wildlife Management Area located in Johnson and Morgan Counties;] and all private inholdings within these areas.

(a) Grouse: October 1 through January 15 only. [Squirrel (gray and fox), grouse, quail, raccoon, and rabbit hunting and trapping for furbearers are permitted from the third Thursday in November through December 4.]

(b) Quail and rabbit: November 1 through January 31 only. [Firearms: Only shotguns incapable of holding more than three (3) shells are permitted.]

(c) [This area is] Closed to all other hunting except deer, waterfowl and turkey as authorized by other applicable regulations.

(d) Dog training: These areas closed to all dog training.

[(13) Dewey Lake Wildlife Management Area located in Floyd County.]

[(a) Squirrel (gray and fox), grouse, quail, raccoon and rabbit hunting and trapping for furbearers are permitted the third Thursday in November through December 8.]

[(b) Only shotguns incapable of holding more than three (3) shells are permitted.]

[(c) This area is closed to all other hunting except deer and turkey as authorized by other applicable regulations.]

(13) [(14)] Fort Knox Wildlife Management Area located in Hardin, Bullitt and Meade Counties is closed to grouse hunting.

(14) [(15)] Pennyrile Forest Wildlife

Management Area located in Christian County is closed to grouse hunting.

(15) [(16)] Higginson-Henry Wildlife Management Area located in Union County.

(a) Quail and rabbit: November 1 through January 31 only.

(b) [Grouse:] No grouse hunting is permitted.

(c) Dog training is closed March 15 through August 31 excepting permitted field trials. [Closed to the training of all dogs March 1 through July 31.]

(d) All hunters and dog trainers must check in and out daily at the designated check station.

(16) [(17)] Yellowbank Wildlife Management Area located in Breckinridge County.

(a) Quail and rabbit: November 1 through January 31 only.

(b) No grouse hunting is permitted.

(c) [(b)] All hunters and dog trainers must check in and out daily at the designated check station.

(d) [(c)] Dog training is closed March 15 through August 31. [Closed to the training of all dogs March 1 through July 31.]

(17) Kleber Wildlife Management Area located in Owen and Franklin Counties.

(a) Quail and rabbit: November 1 through January 31.

(b) All hunters and dog trainers must check in and out daily at the designated check station.

(c) Dog training is closed March 15 through August 31.

(18) Swan Lake Wildlife Management Area located in Ballard County.

(a) Areas designated by signs are closed to hunting.

(b) Closed to all dog training.

[(18) Cane Creek Wildlife Management Area, including all private inholdings, in Laurel County.]

[(a) Squirrel (gray and fox), grouse, quail, raccoon and rabbit hunting and trapping for furbearers are permitted from the third Thursday in November through December 4.]

[(b) Firearms: Only shotguns incapable of holding more than three (3) shells are permitted.]

[(c) This area is closed to all other hunting except deer and turkey as authorized by other applicable regulations.]

(19) Westvaco Public Hunting Areas. Persons hunting on Westvaco Public Hunting Areas must possess a valid Westvaco Hunting Permit.

[(19) Mill Creek Wildlife Management Area located in Jackson County is closed to the training of all dogs February 1 through October 21.]

[[](20) Paintsville Wildlife Management Area located in Johnson and Morgan Counties.[]]

[[](a) Squirrel (gray and fox), grouse, quail, raccoon and rabbit hunting and trapping for furbearers are permitted from the third Thursday in November through December 4.[]]

[[](b) Only shotguns incapable of holding more than three (3) shells are permitted.[]]

[[](c) This area is closed to all other hunting except deer, turkey and waterfowl as authorized by other applicable regulations.[]]

DON R. McCORMICK, Commissioner
G. WENDELL COMBS, Secretary
CHARLES E. PALMER, JR., Chairman

APPROVED BY AGENCY: April 10, 1986
FILED WITH LRC: April 10, 1986 at 3 p.m.

CABINET FOR HUMAN RESOURCES
Department for Medicaid Services
(As Amended)

904 KAR 1:019. Pharmacy services.

RELATES TO: KRS 205.520
PURSUANT TO: KRS 194.050, **205.560(1)(a), (b), (c)**
EFFECTIVE: June 10, 1986
NECESSITY AND FUNCTION: The Cabinet for Human Resources has responsibility to administer the program of Medical Assistance under Title XIX of the Social Security Act. KRS 205.520 empowers the cabinet, by regulation, to comply with any requirement that may be imposed or opportunity presented by federal law for the provision of medical assistance to Kentucky's indigent citizenry. This regulation sets forth the provisions relating to pharmacy services for which payment shall be made by the Medical Assistance Program in behalf of both the categorically needy and medically needy.

Section 1. Prescribed Drugs. Drugs prescribed by a physician, osteopath, or dentist shall be provided with the following limitations:

(1) The drug must be included on the Kentucky Medical Assistance Program Outpatient Drug List;

(2) Prescribing quantities may be limited by the program;

(3) Patients placed in "lock-in" status due to over-utilization are to receive services only from their lock-in provider except in the case of emergency or referral;

(4) Practitioner authorization, i.e., actual signature of the prescriber, shall be required on all prescriptions not phoned in, on all Schedule II controlled substances prescriptions, and when the physician override (certification of brand name necessity) procedure is being used. For telephone prescriptions (but not including the preceding) the pharmacist shall enter on the prescription form the name of the prescriber and the initials of the pharmacist;

(5) No prescription shall be refilled more than five (5) times, or more than six (6) months after the original prescription is written;

(6) Drugs, provided to recipients in institutions in which drugs are considered a part of the reasonable allowable costs under the Kentucky Medical Assistance Program, shall not be billed as an outpatient pharmacy benefit;

(7) Effective May 1, 1975, legend drugs, of a type not included on the Kentucky Medical Assistance Program Outpatient Drug List, and which meet established criteria, shall be considered covered when preauthorized by qualified medical professionals within the Department for Medicaid Services [Division of Medical Assistance].

Section 2. Drug Pricing Information. Drug manufacturers and distributors shall be required to provide the Medical Assistance Program with accurate and complete pricing and/or cost information with regard to the drug manufacturer or distributor's drugs which are considered for inclusion on the Outpatient Drug List, or which may be preauthorized, upon request of the

program.

(1) When a drug manufacturer or distributor provides inaccurate information with regard to drug pricing and/or cost and such fact has been documented to the program, the program may remove the drug for which inaccurate information has been provided from the Outpatient Drug List for a period of six (6) months, and may refuse to preauthorize such drug for a period of six (6) months. A drug manufacturer or distributor may request reinstatement of such drug after the six (6) month suspension period, and the program shall restore to its former status such drug if complete and accurate pricing information has been provided to the program by the drug manufacturer or distributor.

(2) When a drug manufacturer or distributor fails to provide complete pricing and/or cost information concerning a drug within thirty (30) days of the request from the program, the program may remove the drug from the Outpatient Drug List and/or refuse to preauthorize such drug. The drug may be returned to the Outpatient Drug List and/or preauthorized upon receipt by the program of the required pricing and/or cost information.

(3) "Drug manufacturer or distributor" means those companies which the KMAP requests to provide directly to the KMAP pricing or cost information which will be used in establishing the estimated acquisition cost upper limit as required by federal regulations.

FONTAINE BANKS, Commissioner
E. AUSTIN, JR., Secretary
APPROVED BY AGENCY: April 8, 1986
FILED WITH LRC: April 15, 1986 at 11 a.m.

CABINET FOR HUMAN RESOURCES
Department for Medicaid Services
(As Amended)

904 KAR 1:038. Hearing and vision services.

RELATES TO: KRS 205.520
PURSUANT TO: KRS 194.050
EFFECTIVE: June 10, 1986

NECESSITY AND FUNCTION: The Cabinet for Human Resources has responsibility to administer the program of Medical Assistance in accordance with Title XIX of the Social Security Act. KRS 205.520 empowers the cabinet, by regulation, to comply with any requirement that may be imposed or opportunity presented by federal law for the provision of medical assistance to Kentucky's indigent citizenry. This regulation sets forth the provisions relating to the hearing services and vision care services for which payment shall be made by the Medical Assistance Program in behalf of both categorically needy and medically needy.

Section 1. Hearing Services. (1) Audiological benefits: Coverage shall be limited to the following services provided to children under age twenty-one (21) by certified audiologists:

(a) Complete hearing evaluation;

(b) Hearing aid evaluation;

(c) A maximum of three (3) follow-up visits within the six (6) month period immediately following fitting of a hearing aid, such visits to be related to the proper fit and adjustment of that hearing aid;

(d) One (1) follow-up visit six (6) months following fitting of a hearing aid, to assure patient's successful use of the aid.

(2) Hearing aid benefits: Effective June 1, 1981, coverage shall be provided to children under age twenty-one (21) on a pre-authorized basis for any monaural hearing aid model recommended by a certified audiologist so long as that model is available through a participating hearing aid dealer. Binaural hearing aids are not covered.

Section 2. Vision Care Services. Coverage for all age groups shall be limited to prescription services, services to frames and lenses, and diagnostic services provided by ophthalmologists and optometrists, to the extent the optometrist is licensed to perform the services and to the extent the services are covered in the ophthalmologist portion of the physician's program. Eyeglasses are provided only to children under age twenty-one (21) on a pre-authorized basis. Coverage for eyeglasses is limited to two (2) pairs of eyeglasses per year per person. This limitation includes the initial eyeglasses and one (1) replacement per year or two (2) replacements per year. Coverage for initial and extensive visits shall be limited to one (1) visit per patient per provider per twelve (12) month period.

[Section 3. If the funds allocated in the budget for eye examinations, prescriptions (for glasses), and other services are exhausted for the group aged twenty-one (21) and over, vision care services provided by ophthalmologists and optometrists will be terminated for that age group; this limitation shall not be interpreted to limit treatment of diseases of the eye by ophthalmologists. Vision care services for the group aged twenty-one (21) and over if terminated, shall be reinstituted at such time as funds again become available.]

FONTAINE BANKS, Commissioner
E. AUSTIN, JR., Secretary
APPROVED BY AGENCY: April 8, 1986
FILED WITH LRC: April 15, 1986 at 11 a.m.

AMENDED AFTER HEARING

CABINET FOR HUMAN RESOURCES
Department for Medicaid Services
(Amended After Hearing)

904 KAR 1:220. Terms and conditions of provider participation; provider appeals.

RELATES TO: KRS 205.510 to 205.990
PURSUANT TO: KRS 194.050, 205.520
NECESSITY AND FUNCTION: Through KRS 205.520, the Secretary for Human Resources may establish regulations to comply with requirements imposed or opportunities presented by federal law to take advantage of funds available for medical assistance. Through an amendment to 42 U.S.C. 1395c and 1395j, Section 2175 of the Omnibus Budget Reconciliation Act of 1981 allows each state to restrict provider participation in its Medical Assistance Program if it is determined the provider committed fraud or abused the program. To allow the state the ability to respond for good cause against a provider through an administrative action short of adjudication of criminal liability and thereby assuring the continued integrity of the Medical Assistance Program, this regulation is enacted. This provision reiterates the authority of the cabinet to determine the terms and conditions of vendor participation in the Kentucky Medical Assistance Program, and sets forth the procedure by which an aggrieved provider may appeal the termination, suspension, denial or nonrenewal of his or her provider agreement.

Section 1. The Cabinet for Human Resources may determine the terms and conditions for participation of vendors in the Kentucky Medical Assistance Program. The cabinet may suspend, terminate, deny or not renew a vendor's provider agreement for good cause. For purposes of this regulation, "good cause" is defined as:
(1) Misrepresenting to concealing facts in order to receive or to enable others to receive benefits;
(2) Furnishing or ordering services under Medicaid that are substantially in excess of the recipient's needs or that fail to meet professionally recognized health care standards;
(3) Misrepresenting factors concerning a facility's qualifications as a provider;
(4) Failure to comply with the terms and conditions for vendor participation in the program and to effectively render service to recipients;
(5) Submitting false or questionable charges to the agency.

Section 2. Suspension Based on Felony Conviction. [When a provider participating in the Kentucky Medical Assistance Program (KMAP) is convicted of a felony involving fraudulent practice relating to the KMAP, such provider is to be suspended from participation in the KMAP for a minimum of two (2) years. At the end of the suspension period, the provider may initiate enrollment procedures with the KMAP.]
(1) When a provider, which is not a facility or institution, participating in the Kentucky Medical Assistance Program (KMAP) is convicted of a felony involving fraudulent practice relating to the KMAP, such provider is to be suspended from participation in the KMAP for a minimum of two (2) years. At the end of the suspension period, the provider may initiate enrollment procedures with the KMAP.
(2) When a provider, which is a facility or institution, participating in the KMAP has an owner or employee who is convicted of a felony involving fraudulent practice relating to the KMAP, such owner or employee is to be precluded from participation in the KMAP for a minimum of two (2) years. In the case of an owner, this means that he/she must divest himself or herself of the ownership interest; in the case of an employee, this means the employee relationship must end. If appropriate action ending the owner or employee relationship is not taken within sixty (60) days after conviction of the felony involving fraudulent practice relating to the KMAP, the facility or institution is to be suspended from participation in the KMAP for a minimum of two (2) years except that the suspension may be for a lesser period of time if the relationship with the convicted owner or employee is severed. If a facility or institution is suspended, such provider may initiate enrollment procedures with the KMAP at the end of the suspension period (a minimum of two (2) years, or less if the relationship with the convicted individual is severed prior to the expiration of that period of time); when a convicted individual who is an owner or employee severs his/her relationship with the institution or facility, the individual may not singly or as an owner or employee of a facility or institution participate in the KMAP for a minimum period of two (2) years. An individual precluded from participation in the KMAP as a convicted owner or employee may not establish an owner/employee relationship with any other KMAP participating facility or institution during the period of suspension. If he/she does so, the facility or institution is to be advised of the individual's exclusion from participation and afforded a reasonable opportunity (i.e., a period of sixty (60) days) to sever the relationship; if the relationship is not severed, the facility or institution will be precluded from KMAP participation in accordance with the criteria previously stated herein.
(3) A facility or institution may request that the KMAP waive (or otherwise hold in abeyance) the suspension based on the necessity for services by the convicted individual; the suspension may be waived (or otherwise held in abeyance) by the KMAP if it appears that failure to do so would result in Medicaid recipients in the community having inadequate access to services of the type provided by the facility or institution.

Section 3. [2.] Upon notice of a decision to suspend, terminate, deny or not renew a provider agreement by the cabinet, any individual provider aggrieved thereby may file an appeal. The following procedure will govern the appeal of any such individual provider who has received said notice from the cabinet of termination, suspension, denial or nonrenewal of his or her provider agreement or of his or her suspension

from the Kentucky Medical Assistance Program, except in the case of an adverse action taken under Title XVIII (Medicare), binding upon the Medical Assistance Program. Adverse action taken against an individual provider under Medicare must be appealed through the mechanism set forth in 42 CFR, Part 405 Subpart O.

Section 4. [3.] Notification. The Kentucky Medical Assistance Program shall notify a provider in writing at least fifteen (15) days prior to the effective date of any decision to terminate, suspend, deny or not renew a provider agreement. the notice will state:
(1) The reasons for the decision;
(2) The effective date;
(3) The extent of its applicability to participation in the Medical Assistance Program
(4) The earliest date on which the cabinet will accept a request for reinstatement;
(5) The requirements and procedures for reinstatement; and
(6) The appeal rights available to the excluded party.

Section 5. [4.] Evidentiary Hearing. Any provider aggrieved by a decision by the cabinet to suspend, terminate, deny or not renew a provider agreement pursuant to Section 1 of this regulation may, upon written request made within five (5) days from receipt of the written consideration decision, request an evidentiary hearing. Such hearing shall be held within thirty (30) days of receipt of the written request, and a decision shall be rendered within thirty (30) days from the date all evidence and testimony is submitted. Technical rules of evidence shall not apply. The hearing shall be held before an impartial decision-maker appointed by the Secretary for Human Resources. When an evidentiary hearing his held under this section, a provider shall be entitled to the following:
(1) Timely written notice as to the basis of the adverse decision and disclosure of the evidence upon which the decision was based;
(2) An opportunity to appear in person and introduce evidence to refute the basis of the adverse decision;
(3) A provider may be represented by counsel;
(4) A provider shall have an opportunity to be heard in person, to call witnesses, and to introduce documentary and other demonstrative evidence;
(5) A provider shall have an opportunity to cross-examine witnesses;
(6) The decision of the impartial hearing officer shall be in writing and shall set forth the reasons for the decision and the evidence upon which the determination is based.

Section 6. [5.] The decision of the hearing officer shall be the final decision of the Cabinet for Human Resources.

Section 7. [6.] The rights upon appeal by skilled nursing facilities (SNF's), intermediate care facilities (ICF's), and intermediate care facilities for the mentally retarded (ICF/MR's) shall be governed by the provisions of 42 CFR 431.154 (informal reconsideration), and thereafter, 42 CFR 431.153 (evidentiary hearing).

R. HUGHES WALKER, Commissioner
E. AUSTIN, JR., Secretary
APPROVED BY AGENCY: June 6, 1986
FILED WITH LRC: June 6, 1986 at 11 a.m.

PROPOSED AMENDMENTS

KENTUCKY HIGHER EDUCATION ASSISTANCE AUTHORITY
(Proposed Amendment)

11 KAR 3:040. Lender participation requirements.

RELATES TO: KRS 164.740(15), 164.744(1), 164.748(5), 164.766
PURSUANT TO: KRS 164.748(4)
NECESSITY AND FUNCTION: The Kentucky Higher Education Assistance Authority (authority), in accordance with its contract of insurance, insures the repayment of educational loans originated by eligible lenders. This regulation sets forth the conditions under which the authority will execute a contract of insurance with an eligible lender.

Section 1. The authority will execute a contract of insurance with any organization which:
(1) Qualifies as an eligible lender in accordance with 20 USC section 1085 (section 435 of the Higher Education Act of 1965) as amended and KRS 164.740(7);
(2) Is approved to lend money in the Commonwealth of Kentucky;
[(3) Is located in Kentucky;]
(3) [(4)] Is capable of meeting the requirements of due diligence in the making, servicing, and collection of authority insured loans;
(4) [(5)] Provides the disclosures required by 20 USC section 1083a (section 433A of the Higher Education Act of 1965) as amended; and
(5) [(6)] Is financially and administratively capable of meeting its obligations and complying with the requirements of the authority's programs.

Section 2. Loan guarantees shall be issued by the authority only to organizations which have in force a contract of insurance with the authority.

Section 3. Nothing in this regulation shall be interpreted so as to restrict the eligibility of the Student Loan Marketing Association, or other eligible lenders pursuant to 20 USC section 1085, from holding loans insured by the authority provided such loans have been transferred to such holder in accordance with terms which have been agreed to in writing between the authority and such holders.

PAUL P. BORDEN, Executive Director
APPROVED BY AGENCY: April 22, 1986
FILED WITH LRC: May 29, 1986 at 11 a.m.
PUBLIC HEARING SCHEDULED: A public hearing regarding this regulation is scheduled to be held at 1050 U.S. 127 South, Frankfort, Kentucky, on Wednesday, July 30, 1986, at 10 a.m. Any interested persons wishing to comment or attend the hearing pursuant to KRS Chapter 13A must submit their written comments or statement of intent to attend to: The Executive Director, Kentucky Higher Education Assistance Authority, 1050 U.S. 127 South, Frankfort, Kentucky 40601, no later than Friday, July 25, 1986. Absent such response from the public, the hearing may be cancelled.

REGULATORY IMPACT ANALYSIS

Agency Contact Person: Richard F. Casey
(1) Type and number of entities affected: Approximately 285 participating lenders including a minimal number of out-of-state lenders.
(a) Direct and indirect costs or savings to those affected: No change.
1. First year:
2. Continuing costs or savings:
3. Additional factors increasing or decreasing costs (note any effects upon competition):
(b) Reporting and paperwork requirements: No change.
(2) Effects on the promulgating administrative body:
(a) Direct and indirect costs or savings:
1. First year: Minimal increase in number of participating lenders will result in only minimal effect on cost.
2. Continuing costs or savings: Same as first year.
3. Additional factors increasing or decreasing costs: The minimal increase in volume of lender participating in the Guaranteed Student Loan Program will result in a proportionate increase in related administrative requirements.
(b) Reporting and paperwork requirements:
(3) Assessment of anticipated effect on state and local revenues: A minimal level of net revenue to agency associated with program administration may occur.
(4) Assessment of alternative methods; reasons why alternatives were rejected: There are no viable alternatives.
(5) Identify any statute, administrative regulation or government policy which may be in conflict, overlapping, or duplication: None
(a) Necessity of proposed regulation if in conflict:
(b) If in conflict, was effort made to harmonize the proposed administrative regulation with conflicting provisions:
(6) Any additional information or comments: This regulation defines conditions lenders must meet to participate in the loan program. Amendment eliminates requirement that a participating lender be located in Kentucky. This change is made necessary by recent changes in federal program regulations and banking laws which have permitted out-of-state entities to purchase Kentucky lending institutions who serve Kentucky students.

Tiering:
Was tiering applied? No. Concept of tiering does not apply to this situation.

KENTUCKY HIGHER EDUCATION ASSISTANCE AUTHORITY
(Proposed Amendment)

11 KAR 5:010. Authority, purpose, name of grant programs

RELATES TO: KRS 164.740 to 164.764, 164.780, 164.785
PURSUANT TO: KRS 13A.100, 164.748(4)
NECESSITY AND FUNCTION: The Kentucky Higher Education Assistance Authority administers grant programs to provide financial assistance to students to attend Kentucky educational institutions. This regulation sets forth the purpose and names of these grant programs.

Section 1. The State Student Incentive Grant Program (SSIG) authorized under KRS 164.740 to 164.764 provides eligible Kentucky residents grant assistance in order to pursue eligible courses of study at Kentucky educational institutions.

Section 2. The Kentucky Tuition Grant Program (KTG) authorized under KRS 164.780 and 164.785 provides qualified Kentucky residents who bear the major costs of attending accredited independent colleges and universities within the Commonwealth a tuition or fees grant as supplementary aid where need exists.

Section 3. Awards from the State Student Incentive Grant Program, the Kentucky Tuition Grant Program, or a combination of the two (2) may be referred to as KHEAA grants.

Section 4. The KHEAA grant programs are administered in accordance with procedures established by the authority and delineated in the 1986-87 [1985-86] KHEAA Grant Manual, the text and appendix B being incorporated herein by reference. A current copy of the manual shall be maintained on file with the Legislative Research Commission. Copies of the manual may be obtained upon request to the authority. Participating educational institutions shall maintain a current copy of the manual on file and, upon request, make a copy of the manual available for review by students.

PAUL P. BORDEN, Executive Director
APPROVED BY AGENCY: April 22, 1986
FILED WITH LRC: May 29, 1986 at 11 a.m.
PUBLIC HEARING SCHEDULED: A public hearing regarding this regulation is scheduled to be held at 1050 U.S. 127 South, Frankfort, Kentucky, on Wednesday, July 30, 1986, at 10 a.m. Any interested persons wishing to comment or attend the hearing pursuant to KRS Chapter 13A must submit their written comments or statement of intent to attend to: The Executive Director, Kentucky Higher Education Assistance Authority, 1050 U.S. 127 South, Frankfort, Kentucky 40601, no later than Friday, July 25, 1986. Absent such response from the public, the hearing may be cancelled.

REGULATORY IMPACT ANALYSIS

Agency Contact Person: Richard F. Casey
(1) Type and number of entities affected: An undetermined number of grant applicants and 54 educational institutions in Kentucky.
(a) Direct and indirect costs or savings to those affected: None
1. First year:
2. Continuing costs or savings:
3. Additional factors increasing or decreasing costs (note any effects upon competition):
(b) Reporting and paperwork requirements: Minimal
(2) Effects on the promulgating administrative body:
(a) Direct and indirect costs or savings: None
1. First year: None
2. Continuing costs or savings: None
3. Additional factors increasing or decreasing costs: An increased number of students will be eligible for a constant dollar volume.
(b) Reporting and paperwork requirements: Minimal requirements associated with the administration of the program.
(3) Assessment of anticipated effect on state and local revenues: None
(4) Assessment of alternative methods; reasons why alternatives were rejected: N/A
(5) Identify any statute, administrative regulation or government policy which may be in conflict, overlapping, or duplication: None
(a) Necessity of proposed regulation if in conflict:
(b) If in conflict, was effort made to harmonize the proposed administrative regulation with conflicting provisions:
(6) Any additional information or comments: This regulation merely sets forth the purposes and names of certain grant programs as well as making the 1986-87 Grant Program Manual regulatory.

Tiering:
Was tiering applied? No. No burden is imposed by this regulation. It merely establishes program participation standards applicable to all on an equal basis.

KENTUCKY HIGHER EDUCATION ASSISTANCE AUTHORITY
(Proposed Amendment)

11 KAR 5:030. Student eligibility requirements.

RELATES TO: KRS 164.740 to 164.764, 164.780, 164.785
PURSUANT TO: KRS 13A.100, 164.748(4)
NECESSITY AND FUNCTION: The Kentucky Higher Education Assistance Authority administers grant programs to provide financial assistance to students to attend Kentucky educational institutions. This regulation sets forth eligibility requirements for KHEAA Grant programs. Capitalized acronyms, words, and phrases have the meaning assigned to them in 11 KAR 5:020.

Section 1. Eligibility of Students. In order to qualify for a KHEAA grant, a student shall:
(1) Be a resident of the Commonwealth of Kentucky;
(2) Be enrolled as a full-time student in an eligible course of study;
(3) Be enrolled in an undergraduate program at an educational institution and not have previously earned a first baccalaureate or professional degree;
(4) Be determined by the authority, in accordance with procedures delineated in the KHEAA Grant Program Manual, to have established financial need for the KHEAA grant program assistance [pursuant to 11 KAR 5:050 and 11 KAR 5:060];
(5) Have remaining eligibility. A student enrolled in a two (2) year institution shall be limited to four (4) semesters or six (6) quarters of grant eligibility. A student enrolled in a four (4) year institution shall be limited to eight (8) semesters or twelve (12) quarters of KHEAA grant program eligibility. An exception may be granted by the executive director if the bachelor's program leads to a first degree and is designed to be completed in a ten (10) semester period, in which case the eligibility may be extended for cause by the executive director to ten (10) semesters. A student enrolled in an eligible course of study of a duration not otherwise covered by this regulation shall have the same number of semesters or quarters of KHEAA grant program eligibility as are normally required for a student to complete that eligible course of study;
(6) Not receive financial assistance to meet educational expenses in excess of need;
(7) Maintain satisfactory progress in an eligible course of study according to the published standards and practices of the educational institution at which the student is enrolled; and
(8) Satisfy all financial obligations to the authority and to any educational institution. Ineligibility under this subsection may be waived for cause by the executive director;
(9) Be a citizen of the United States or an eligible noncitizen. For purposes of this section, an eligible noncitizen shall mean an individual who is either:
(a) A U.S. national;
(b) A U.S. permanent resident with an Alien Registration Receipt Card (I-151 or I-551);
(c) A permanent resident of the Northern Mariana Islands;
(d) A permanent resident of the Trust Territory of the Pacific Islands; or
(e) Other eligible noncitizens who must have one of the following documents from the U.S. Immigration and Naturalization Service:
1. Arrival-Departure Record (I-94) showing:
a. "Refugee", or
b. "Adjustment applicant", or
c. "Conditional entrant", or
d. "Indefinite parole".
2. An official statement that the applicant has been granted asylum in the U.S.
Students who are in the U.S. on an F1 or F2 student visa only or a J1 or J2 exchange visitor visa only are not eligible for KHEAA Grant assistance.
(10) Meet the federal selective service registration compliance requirement if receiving State Student Incentive Grant funds. Those receiving Kentucky Tuition Grant (KTG) funds only do not have to meet this requirement.

Section 2. A KHEAA grant recipient, who, on

the basis of information submitted on the KHEAA grant application, is potentially eligible for a Pell grant must apply for the Pell grant prior to disbursement of the spring semester portion of the KHEAA grant. Recipients subject to this regulation will be notified by the authority in advance of cancellation of the undisbursed portion of the KHEAA grant. If within a reasonable time following such notification the student fails to provide documentation of filing for a Pell grant, the undisbursed portion of the KHEAA grant shall be cancelled.

Section 3. (1) A student who fails to enroll, withdraws or changes enrollment status may owe a repayment of cash disbursements made to the student for educationally related expenses. If the student received financial aid, a portion of the repayment is due to the financial aid programs.

(2) The amount of the repayment shall be determined in accordance with the institution's refund and/or repayment policies relative to financial aid funds. If, however, a KHEAA grant recipient officially or unofficially withdraws from an institution before the first day of classes of the award period, or the student's enrollment is terminated with no assessment of tuition and fees by the institution, then the award shall be deemed an overaward and a full refund or repayment of the KHEAA grant shall be required, notwithstanding any institutional policy to the contrary.

(3) If, under the institution's financial aid repayment policy or this regulation, the student owes a repayment, the KHEAA grant or a portion thereof must be repaid to the authority by the student. The institution must calculate the amount of repayment due to the authority and notify the student and the authority in a timely fashion regarding the amount due to the authority.

PAUL P. BORDEN, Executive Director
APPROVED BY AGENCY: April 22, 1986
FILED WITH LRC: May 29, 1986 at 11 a.m.
PUBLIC HEARING SCHEDULED: A public hearing regarding this regulation is scheduled to be held at 1050 U.S. 127 South, Frankfort, Kentucky, on Wednesday, July 30, 1986, at 10 a.m. Any interested persons wishing to comment or attend the hearing pursuant to KRS Chapter 13A must submit their written comments or statement of intent to attend to: The Executive Director, Kentucky Higher Education Assistance Authority, 1050 U.S. 127 South, Frankfort, Kentucky 40601, no later than Friday, July 25, 1986. Absent such response from the public, the hearing may be cancelled.

REGULATORY IMPACT ANALYSIS

Agency Contact Person: Richard F. Casey
(1) Type and number of entities affected: An undetermined number of grant applicants.
(a) Direct and indirect costs or savings to those affected: None
1. First year:
2. Continuing costs or savings:
3. Additional factors increasing or decreasing costs (note any effects upon competition):
(b) Reporting and paperwork requirements: Negligible.
(2) Effects on the promulgating administrative body: None
(a) Direct and indirect costs or savings:
1. First year:
2. Continuing costs or savings:
3. Additional factors increasing or decreasing costs:
(b) Reporting and paperwork requirements: Negligible
(3) Assessment of anticipated effect on state and local revenues: None
(4) Assessment of alternative methods; reasons why alternatives were rejected: N/A
(5) Identify any statute, administrative regulation or government policy which may be in conflict, overlapping, or duplication: None
(a) Necessity of proposed regulation if in conflict:
(b) If in conflict, was effort made to harmonize the proposed administrative regulation with conflicting provisions:
(6) Any additional information or comments: This regulation sets forth student eligiblity requirements for the KHEAA State Grant Program. Existing regulation is amended to conform to Federal requirements with respect to State Student Incentive Grant programs and to reflect the repeal of other program requirements.

Tiering:
Was tiering applied? No. Regulation sets forth program participation eligibility requirements; no burden is imposed by this regulation.

KENTUCKY HIGHER EDUCATION ASSISTANCE AUTHORITY
(Proposed Amendment)

11 KAR 7:010. Incentive loan program; mathematics and science.

RELATES TO: KRS 156.611
PURSUANT TO: KRS 156.611(10), 164.748(4)
NECESSITY AND FUNCTION: KRS 156.611 establishes the Math/Science [sets up an] incentive loan program for awarding incentive loans to persons declaring an intention to serve and who actually render service in the critical teacher shortage fields of mathematics and science. Section 39 of House Bill 6, enacted in the 1985 extraordinary session of the General Assembly, amended KRS 156.611 to transfer administration of this program from the Department of Education to the Kentucky Higher Education Assistance Authority. It is necessary to the [uninterrupted] administration of the program that the Assistance Authority promulgate this regulation[, as an interim measure,] to prescribe rules for the administration of the program [while the Assistance Authority conducts extensive program planning, evaluation and development of a permanent administrative structure for the program. For this reason, this regulation closely corresponds to 704 KAR 15:090 promulgated by the Department of Education].

Section 1. The Kentucky Higher Education Assistance Authority (authority) shall, to the extent of appropriations for such purpose, award Math/Science Incentive Loans (loans) to persons enrolled or accepted for enrollment in a Qualified Teacher Education Program on a full-time basis at a participating institution approved by the State Board of Education to offer Qualified Teacher Education Programs, who

declare an intention to teach in one (1) of the critical shortage fields in the public schools of the Commonwealth, and who meet the eligibility requirements set forth herein. Persons already possessing certification in one (1) of the critical shortage fields may be awarded loans to pursue certification in a different critical shortage field only upon a statement by the local school district superintendent of exceptional need for a teacher in that field.

Section 2. Definitions. (1) "Public school" means a common school operated under the laws of the Commonwealth of Kentucky.

(2) "Semester" means a period of about eighteen (18) weeks, which usually makes up one-half (1/2) of a public school year or one-half (1/2) of a participating institution's academic year.

(3) "Qualified teaching service" means employment in a critical shortage field in grades seven (7) through twelve (12) in a public school in a position requiring a Kentucky teacher's certificate for a major portion of a school day for at least seventy (70) days during a semester.

(4) "Participating institution" means an institution of higher education located in Kentucky, which is approved by the State Board of Education to offer teacher education programs, and which has in force an agreement with the authority providing for administration of this program.

(5) "Critical shortage field" means the teaching fields of mathematics and science specified in KRS 156.611.

(6) "Qualified teacher education program" means a program of study in a mathematics or science major or area of concentration leading to teacher certification in one (1) of the critical shortage fields.

Section 3. [1.] Teacher Recertification Eligibility. (1) Up to thirty (30) percent of the annual appropriation for KRS 156.611 will be loaned to [used to assist] certified teachers who do not possess certification in one of the critical shortage fields, [set forth in KRS 156.611 and] who have been admitted to a qualified [an appropriate] teacher education program, approved by the State Board of Education, at a participating institution [either as a part-time student during the regular school term or] as a summer school student, and who plan to complete requirements for certification in the specified critical shortage field.

(2) Eligible applicants for such loans must already possess a Kentucky teacher certificate.

(3) For first time eligible applicants, priority for such loans will be given in rank order established on the basis of the following weighted criteria:

(a) Relative need for teachers within the critical shortage field as determined by the Department of Education or a survey of local school district superintendents. Weight: maximum thirty (30) points out of 100.

(b) The applicant's cumulative grade point average for undergraduate study. Weight: maximum twenty-five (25) points for grade point averages in the 3.5 to 4.0 range; maximum twenty (20) points for averages in the 3.0 to 3.4 range; and maximum fifteen (15) points for averages in the 2.5 to 2.9 range.

(c) National Teacher Examination (NTE) or Graduate Record Examination (GRE) scores. Scores of applicants from minority population groups will be measured relative to the average scores for such minority population groups, when available. Weight: maximum twenty (20) points for scores in the ninety (90) to ninety-nine (99) percentile range; maximum fifteen (15) points for scores in the eighty (80) to eighty-nine (89) percentile range; maximum ten (10) points for scores in the seventy (70) to seventy-nine (79) percentile range.

(d) Consideration to teachers teaching out of field in one of the critical shortage fields on or before December 1, 1984. Weight: maximum fifteen (15) points out of 100.

(e) Proximity to completion of certification requirements in one of the critical shortage fields. Weight: maximum ten (10) points out of 100.

[(3) For first time applicants priority for such loans will be given to the rank order established on the basis of the following appropriately weighted criteria.]

[(a) The higher of either the applicant's grade point average for undergraduate work, or NTE/GRE scores. Weight: fifty (50) out of a maximum of 100.]

[(b) Consideration to teachers teaching out of field in one of the fields identified in KRS 156.011 on or before December 1, 1984. Weight: fifteen (15) out of a maximum of 100.]

[(c) Consideration to teachers from minority population groups. Weight: fifteen (15) out of a maximum of 100.]

[(d) Proximity to completion of certification requirements in one of the identified fields. Weight: ten (10) out of a maximum of 100.]

[(e) Need for teachers in chosen field as determined by the Department of Education. Weight: ten (10) out of a maximum of 100.]

(4) Once all the criteria in subsection (3) of this section have been evaluated and two (2) or more applicants are [appear] equally ranked [qualified], selection between the applicants will be made on the basis of the date the application is received by the participating institution [accompanying letters of recommendation from persons associated professionally with the applicant].

(5) Certified teachers, who received a loan under this program pursuant to prior regulations, to pursue certification in a critical shortage field on a part-time basis during the regular school year, shall be eligible to receive additional loans in accordance with this regulation to complete such certification. Such loans shall not exceed tuition and institutional fees payable by such a recipient in a qualified teacher education program. [Applications for such loans by eligible teachers will be received and verified each semester by the institution where the teacher intends to enroll. The institutions shall forward the applications and supporting documentation of the eligible applicants to the Department of Education.]

[(6) Applicants who have successfully completed one (1) or more semesters in the program, maintain a two and five-tenths (2.5) grade point average and make normal progress toward completion of certification requirements

shall receive priority over new applicants.]

(6) [(7)] The amount of a summer loan under this section for a recipient [part-time student] shall not exceed the total cost of attendance determined by the participating institution [tuition and institutional fees payable by such a recipient in the required courses taken each semester]. The maximum [amount of] summer loan for teachers enrolled full time in a qualified teacher education program [the required courses] shall be $833 per summer session. The aggregate maximum for loans under this section shall be $2500 [semester].

[(8) The last date for receipt of applications for loans by the Assistance Authority under Section 1 of this regulation shall be no later than six (6) weeks before the beginning of the relevant semester.]

Section 4. [2.] Student Certification Eligibility. (1) At least seventy (70) percent of the annual appropriation for KRS 156.611 will be used to provide incentive loans to persons enrolled full time as a sophomore, junior, or senior [during the regular school term] in a qualified teacher education program[s] approved by the State Board of Education at a participating institution [institutions in Kentucky] with the intention of obtaining certification to teach in one of the critical shortage fields [identified in KRS 156.611].

(2) Eligible applicants for loans must have a grade point average of at least two and five-tenths (2.5) computed on a 4.0 scale. [Applicants who have successfully completed one (1) or more years in this program shall receive priority over new applicants. For first time applicants, priorities will be given according to rank order established in accordance with subsection (4) of this section.]

[(3) The number of loans awarded to students at each institution will be in proportion to the number of certified teachers produced by the institution in the most recent year for which such information is available.]

(3) [(4)] The [college or education department at each] participating institution shall establish a screening committee to verify that applicants from that institution are [a student is] eligible for a loan under this section. The committee will certify that eligible loan applicants have a reasonable chance for completing the qualified teacher education program in the selected major. The committee shall rank [order] all eligible first-time applicants based on the following criteria:

(a) Relative need for teachers within the critical shortage fields as determined by the Department of Education or a survey of local district superintendents. Weight: maximum fifty (50) points.

(b) Cumulative high school grade point average or, for persons holding a bachelor's degree, cumulative undergraduate grade point average. Weight: maximum thirty (30) points for averages in the 3.5 to 4.0 range; maximum twenty (20) points for averages in the 3.0 to 3.4 range; and maximum ten (10) points for averages in the 2.5 to 2.9 range.

(c) College entrance examination score or, for persons holding a bachelor's degree, Graduate Record Examination (GRE) score. Scores of applicants from minority population groups will be measured relative to the norms for such minority population groups, when available. Weight: maximum twenty (20) points for scores in the ninety (90) to ninety-nine (99) percentile range; maximum fifteen (15) points for scores in the eighty (80) to eighty-nine (89) percentile range; maximum ten (10) points for scores in the seventy (70) to seventy-nine (79) percentile range.

[(a) Grade point average or, for persons holding a bachelor's degree, the higher of the grade point average for undergraduate work or the NTE/GRE scores. Weight: fifty (50) out of a maximum of 100.]

[(b) College entrance scores. Weight: twenty (20) out of a maximum of 100.]

[(c) Consideration to students from minority groups. Weight: twenty (20) out of a maximum of 100.]

[(d) Need for teachers in chosen field as determined by the Department of Education. Weight: ten (10) out of a maximum of 100.]

(4) [(5)] Once all criteria in subsection (3) [(4)] of this section have been evaluated and two (2) or more applicants are [appear] equally ranked [qualified], priority shall be given first to graduates of Kentucky high schools and second to Kentucky residents, and then based upon the date the application is received by the participating institution [applicants with letters of recommendation indicating that the applicant possesses aptitudes related to excellence in teaching mathematics/science].

[(6) The recipient shall maintain at least a two and five-tenths (2.5) grade point average and make normal progress toward receiving certification in one (1) of the areas listed in KRS 156.611 in order to remain in the loan program.]

[(7) The screening committee shall forward in rank order, the applications and names of all eligible applicants to the Kentucky Higher Education Assistance Authority and to the financial aid officer at the selected institutions no later than the second week of July for academic year loans and no later than the second week of April for summer semester loans.]

(5) [(8)] The amount of loan under this section for a student shall not exceed the student's total cost of attendance determined by the participating institution. The maximum amount of loan for recipients under this section shall be $1,250 per semester or $2,500 per academic year [annually]. Summer school loans shall not exceed $833, and shall be in addition to the academic year maximum. The aggregate maximum for loans under this section shall be $7,500.

Section 5. Application. Applications for loans will be received, evaluated and verified by the screening committee at the participating institution where the applicant intends to enroll. Applications must be submitted by a deadline set annually by the authority. The participating institution shall forward the applications, ranking, and supporting documentation of the eligible applicants to the authority. Loans for summer session attendance shall be made upon separate application.

Section 6. Renewal. Applicants who have successfully completed one (1) or more summer sessions or semesters in the program, maintain a

two and five-tenths (2.5) grade point average computed on a 4.0 scale and make normal progress toward completion of certification requirements in one (1) of the critical shortage fields, as determined by the participating institution, qualify for subsequent loans, upon application, and shall receive priority over new applicants. Loans pursuant to Section 3 of this regulation shall be renewed for a maximum of two (2) summer sessions.

Section 7. [3.] Use of Loan Proceeds. Proceeds of a loan under Sections 3 or 4 [1 or 2] of this regulation shall be used by the recipient first [exclusively] for payment of tuition and other institutional charges payable by the recipient to the participating institution, and thereafter for other educational related expenses.

Section 8. [4.] Reallocation of Funds. [Funds allotted to institutions and not utilized by them,] (1) principal and interest paid by recipients, and any money not utilized under Section 3 [1] of this regulation shall be used to make [grant] additional loans under Section 4 [2] of this regulation. [Recipients for the loans will be selected from applications forwarded by the institutions using the same eligibility and selection criteria as outlined in Section 2 of this regulation.]

(2) In the event that funds are not sufficient to award all applicants, loans shall first be awarded to those qualifying applicants who previously received loans. In the event that funds are insufficient to award all prior recipients who are qualified applicants, then loans shall be prorated in accordance with the cumulative amount previously received by the applicant. If funds are sufficient to award new applicants, an award shall be made first to the applicant with the highest score on the selection criteria and, thereafter, in descending order to persons having lower scores until all available funds are exhausted.

Section 9. Disbursements. Disbursements of loans shall be made at the beginning of each semester or summer session and such disbursement shall be evidenced by a promissory note, prescribed by the authority, in which the loan recipient shall agree to repay the loan or render qualified teaching service in lieu thereof.

Section 10. Notifications. Recipients shall notify the authority within thirty (30) days of:

(1) Change in enrollment status;

(2) Cessation of enrollment in a qualified teacher education program;

(3) Employment in a qualified teaching service position; or,

(4) Change of address.

Section 11. Withdrawals. Loan recipients who, prior to completion, cease to be enrolled on a full-time basis in a qualified teacher education program at a participating institution, shall immediately become liable for the repayment to the authority of the sum of all loans received plus interest accrued thereon unless such recipient has an approved deferment pursuant to 11 KAR 7:020. For purposes of this section, teachers seeking recertification in accordance with Section 3 of this regulation are considered enrolled on a full-time basis for so long as they continue to enroll full time in consecutive summer sessions while making normal progress toward completion of certification requirements as determined by the participating institution.

Section 12. Repayment. Recipients who do not begin employment in a qualified teaching service position within the six (6) month period following completion of a qualified teacher education program in a participating institution (excluding periods of deferment pursuant to 11 KAR 7:020) shall immediately become liable to the authority for repayment of principal and interest accrued, pursuant to the earliest promissory note then outstanding. In each semester thereafter, during which a recipient does not render qualified teaching service, repayment of an additional promissory note shall become due, proceeding sequentially from the promissory note having the earliest date to the most recent date.

Section 13. Repayment Schedule. Written notification of demand shall be sent by the authority to the loan recipient's last known address and shall be effective upon mailing. The authority may agree, in its sole discretion, to accept repayment in installments in accordance with a schedule established by the authority. In the event that more than one (1) promissory note has come due for repayment and remains unpaid, then payments shall first be applied to the earliest unpaid promissory note. Payments shall be applied first to accrued interest and then to principal.

Section 14. Cancellation. In order to receive cancellation of a promissory note and the interest thereon, a loan recipient must render qualified teaching service in a public school during a semester. One such promissory note shall be cancelled for each semester during which qualified teaching service is verified to the authority. Such cancellations of promissory notes shall be in sequential order beginning with the earliest promissory note. Verification of qualified teaching service shall be submitted to the authority in writing, signed by the local school district superintendent or building principal, within thirty (30) days of the date a loan recipient completes such qualified teaching service.

Section 15. Interest. The interest rate on loans made under KRS 156.611 after July 1, 1986, shall be twelve (12) percent per annum simple interest. The interest rate shall remain fixed for the duration of the loan. Interest accruing on the unpaid principal of each promissory note shall be computed from the date of disbursement of the respective promissory note, and such interest shall continue to accrue until the promissory note is paid in full pursuant to Sections 11 or 13 of this regulation or cancelled pursuant to Section 15 of this regulation. In the event that the loan is not repaid or cancelled in accordance with the terms of the promissory note and related repayment schedule, if any, and judgment is rendered on the debt, then the annual interest rate shall, from the date of such judgment, be increased to nineteen (19) percent.

Section 16. Records. A participating institution shall maintain complete and accurate records pertaining to the eligibility, enrollment and progress of students receiving aid under this program and the disbursement of funds and institutional charges as may be necessary to audit the disposition of funds hereunder. Such records shall be maintained for at least five (5) years after the student ceases to be enrolled at the participating institution.

Section 17. Refunds. A participating institution shall refund to the authority, within forty (40) days of a recipient's last date of attendance, any amount attributable to this program which is determined to be due under the institution's refund policy.

Section 18. Information Dissemination and Recruitment. The authority shall disseminate information through high school counselors and school superintendents about this program to potential recipients. Participating institutions shall provide assurances that program information will be disseminated to freshmen and sophomores enrolled at that institution. Participating institutions shall actively recruit students from minority population groups for participation in this program.

[Section 5. Qualifying service as a certified teacher in one (1) of the critical shortage areas shall be rendered within the Commonwealth of Kentucky in a public, accredited school in grades seven (7) through twelve (12), and verification of services by the local school district superintendent or building principal shall be submitted in writing to the Kentucky Higher Education Assistance Authority.]

[Section 6. The interest rate on loans made under KRS 156.611 shall be the prime rate effective the first banking day in July each year plus one (1) percent. The interest rate so determined shall apply to all loans made during the following fall, spring and summer semester and shall remain fixed for the duration of the loan. Interest accruing on the unpaid principle of each loan shall be computed from the date of disbursement of the respective loan, and such interest shall continue to accrue until the loan is paid in full.]

[Section 7. Repayment of loans may be deferred by the Kentucky Higher Education Assistance Authority for appropriate cause when it is in the best interest of the program, and it shall be the recipient's responsibility to request deferrals.]

[Section 8. Each disbursement of loans authorized under this regulation shall be evidenced by a promissory note prescribed by the Kentucky Higher Education Assistance Authority. Repayment of all outstanding notes shall become immediately due upon the recipient's ceasing to be enrolled as required in Sections 1(1) or 2(1) of this regulation. Otherwise, repayment of each note shall become due or forgiveness of each note shall occur, in sequential order beginning with the earliest note, in each of six (6) consecutive semesters, excluding periods of deferment, immediately following the recipient's completion of the required program of studies. Said repayment or forgiveness shall be determined on the basis of whether the recipient has rendered qualifying service in accordance with Section 5 of this regulation. Written notification of demand for repayment shall be sent by the Kentucky Higher Education Assistance Authority to the recipient's last known address, and shall be effective upon mailing. The Kentucky Higher Education Assistance Authority may agree to accept repayment in installments in accordance with a schedule established by the Assistance Authority. In the event that more than one (1) note has come due for repayment and remain unpaid, then payments shall first be applied to the earliest unpaid note. Payments shall be applied first to accrued interest and then to principal.]

[Section 9. In the event that funds are not sufficient to satisfy all applications, the loans shall first be awarded to those qualifying applicants who previously received loans. In the event that funds remain insufficient to satisfy all applications of those previously receiving loans, then, loans shall be prorated in accordance with the cumulative amount previously received by the applicant.]

PAUL P. BORDEN, Executive Director
APPROVED BY AGENCY: April 22, 1986
FILED WITH LRC: May 29, 1986 at 11 a.m.
PUBLIC HEARING SCHEDULED: A public hearing regarding this regulation is scheduled to be held at 1050 U.S. 127 South, Frankfort, Kentucky, on Wednesday, July 30, 1986, at 10 a.m. Any interested persons wishing to comment or attend the hearing pursuant to KRS Chapter 13A must submit their written comments or statement of intent to attend to: The Executive Director, Kentucky Higher Education Assistance Authority, 1050 U.S. 127 South, Frankfort, Kentucky 40601, no later than Friday, July 25, 1986. Absent such response from the public, the hearing may be cancelled.

REGULATORY IMPACT ANALYSIS

Agency Contact Person: Richard F. Casey
(1) Type and number of entities affected: Kentucky postsecondary educational institutions offering programs in mathematics and/or science and an undetermined number of applicants.
(a) Direct and indirect costs or savings to those affected:
1. First year: Minimal
2. Continuing costs or savings: Minimal
3. Additional factors increasing or decreasing costs (note any effects upon competition): N/A
(b) Reporting and paperwork requirements: Normal administrative costs associated with the administration of a student financial assistance program.
(2) Effects on the promulgating administrative body:
(a) Direct and indirect costs or savings: Minimal
1. First year:
2. Continuing costs or savings:
3. Additional factors increasing or decreasing costs:
(b) Reporting and paperwork requirements: Minimal - those associated with the administration of a student financial assistance program.

(3) Assessment of anticipated effect on state and local revenues: N/A
(4) Assessment of alternative methods; reasons why alternatives were rejected: No viable alternatives.
(5) Identify any statute, administrative regulation or government policy which may be in conflict, overlapping, or duplication: None
(a) Necessity of proposed regulation if in conflict:
(b) If in conflict, was effort made to harmonize the proposed administrative regulation with conflicting provisions:
(6) Any additional information or comments:

Tiering:
Was tiering applied? No. This regulation implements a program providing benefits to applicants on an equal basis.

REVENUE CABINET
Department of Professional and Support Services
(Proposed Amendment)

103 KAR 15:050. Filing dates and extensions.

RELATES TO: KRS 141.042, 141.170, 141.300
PURSUANT TO: KRS Chapter 13A
NECESSITY AND FUNCTION: This regulation is specifically required by KRS 141.042 and 141.300 to provide filing dates and extensions for declarations of estimated income tax for income tax returns.

Section 1. Filing Dates. Income tax returns must be filed with the Revenue Cabinet by the fifteenth day of the fourth month following the close of the taxable year unless an extension of time is granted. If the due date is Saturday, Sunday, or a legal holiday, the due date is the next business day. If the envelope bearing the return is postmarked on or before the due date, late filing penalties will not apply.

Section 2. Extensions: Individual Income Tax Returns. The cabinet is authorized to grant extensions of time for filing income tax returns. Individual taxpayers may obtain extensions by either of the following methods:
(1) Specific request. Taxpayers may file extension requests with the Income Withholding Tax Section, Department of Processing and Enforcement, Kentucky Revenue Cabinet, Post Office Box 1190, Frankfort, Kentucky 40602, before the due date of the return. Extension requests must contain the reasons for the request. Upon approval, taxpayers will be notified by mail. A copy of the approved extension must be attached to the return when it is filed. Extensions requested under this method are automatically granted for six (6) months (twelve (12) months for individuals outside the United States). Statutory interest shall be paid from the original due date until the tax is paid.
(2) Federal extensions. Taxpayers will be granted the same extension of time for filing Kentucky income tax returns as they are granted for filing federal income tax returns. A specific request to the cabinet is not required, under this method, but a copy of the federal extension approval(s), or request for an automatic extension must be attached to the return when it is filed. Extensions requested under this method are only for the extension period(s) granted by the Internal Revenue Service and are not automatically granted for six (6) months. Tax due plus statutory interest must be paid from the normal due date until the return is filed. Failure to file and pay the tax by the extended due date will result in late filing penalties.

Section 3. Extensions: Individual Declaration. An application for an extension of time for filing a declaration of estimated income tax shall be filed with the Individual Withholding Tax Section, Department of Processing and Enforcement, Kentucky Revenue Cabinet, Post Office Box 1190, Frankfort, Kentucky 40602. The application shall contain the basis for the extension request. An extension of time for filing declarations of estimated tax will be granted only under exceptional circumstances. If approved, the extension will be granted for thirty (30) days from the normal due date. The approval also extends the time for paying installments of estimated tax for thirty (30) days.

Section 4. Extensions: Corporation Income and License Tax Returns. A corporation may file an extension request with the Corporation Income Tax Section, Department of Processing and Enforcement, Kentucky Revenue Cabinet, Post Office Box 130<u>2</u> [7], Frankfort, Kentucky 40602. The extension request must be filed on or before the due date of the return and ninety (90) percent of the income tax due for the taxable year <u>(or the income tax shown on the return for the preceding year)</u> must be paid by that date. Payment includes credit(s) for declaration payment(s) or overpayment(s) of prior taxable year(s) credited to the current taxable period. A copy of an approved extension will not be returned to the corporation, but a copy of the extension request must be attached to the return when it is filed. Under the provisions of KRS 141.170, the cabinet is not authorized to grant an extension of time for filing a corporation income tax return unless the taxpayer both files the extension request on or before the return due date and also prepays at least ninety (90) percent of the income tax due for the year <u>(or pays the amount of income tax shown on the return for the preceding taxable year covering a twelve (12) month period)</u> by such return due date. <u>(No prepayment is required if the return for the preceding year shows no tax liability.)</u> Failure to comply with either of these requirements may require application of the penalty imposed by KRS 141.990(2). Any penalty assessed shall not apply to amounts paid on or before the original due date of the return. Statutory interest shall be paid from the original due date until the tax is paid. A timely extension request is automatically an extension for filing the corporation license tax return for the same taxable year. The corporation is not required to prepay the license tax to obtain a license tax extension. If an extension is invalid for income tax purposes, this will not invalidate the extension for license tax. A corporation may elect to pay the license tax due when an extension is requested. Tax due plus interest shall be paid from the due date until the license tax return is filed and payment submitted. Corporations

which are members of a consolidated group or affiliates of another corporation must each file separate extension requests.

Section 5. Extensions: Corporation Declarations. An application for an extension of time for filing a corporation declaration of estimated income tax shall be filed with the Corporation Income Tax Section, Department of Processing and Enforcement, Kentucky Revenue Cabinet, Post Office Box 1302 [7], Frankfort, Kentucky 40602, and shall contain the basis for the extension request. An extension of time for filing a declaration of estimated tax will be granted only under exceptional circumstances. If approved, the extension will be granted for thirty (30) days from the normal due date. The approval also extends the time for paying installments of estimated tax for thirty (30) days.

GARY W. GILLIS, Secretary
APPROVED BY AGENCY: June 12, 1986
FILED WITH LRC: June 12, 1986 at 3 p.m.
PUBLIC HEARING SCHEDULED: A public hearing on this regulation will be held on July 23, 1986 at 10 a.m. in Room 406 of the Capitol Annex, Frankfort, Kentucky. If no written notice of intent to attend the public hearing is received within five days before the scheduled hearing, the hearing will be cancelled. Those interested in attending shall notify in writing: Scott Akers, Revenue Cabinet, Division of Tax Policy and Legal Services, New Capitol Annex Building, Frankfort, Kentucky 40620.

REGULATORY IMPACT ANALYSIS

Agency Contact Person: Scott Akers
(1) Type and number of entities affected: This amendment results from 1986 legislation and affects approximately 15,000 corporations which no longer will be required to pay 90% of the current year income tax to obtain an extension for filing the return. Corporations may elect to pay, with the extension request, either the income tax paid on the prior year return or 90% of the tax for the current year. This new law eliminates the situation in which a return is considered late and subject to penalties because the corporation failed to pay 90% of current year tax with its extension request if it elects to pay based upon the prior year liability and files its return within six months from the original due date.
(a) Direct and indirect costs or savings to those affected:
1. First year: Reduces number of corporations subject to penalties and reduces audit time.
2. Continuing costs or savings: Same as first year.
3. Additional factors increasing or decreasing costs (note any effects upon competition): None
(b) Reporting and paperwork requirements: Less correspondence and fewer disputes concerning penalty assessments.
(2) Effects on the promulgating administrative body:
(a) Direct and indirect costs or savings:
1. First year: Less correspondence will be received and less audit time will be required.
2. Continuing costs or savings: Same as first year.
3. Additional factors increasing or decreasing costs: None
(b) Reporting and paperwork requirements: Slightly less paperwork.
(3) Assessment of anticipated effect on state and local revenues: Slight postponement.
(4) Assessment of alternative methods; reasons why alternatives were rejected: None
(5) Identify any statute, administrative regulation or government policy which may be in conflict, overlapping, or duplication: None
(a) Necessity of proposed regulation if in conflict: N/A
(b) If in conflict, was effort made to harmonize the proposed administrative regulation with conflicting provisions: N/A
(6) Any additional information or comments:

Tiering:
Was tiering applied? No. The law applies to all corporate taxpayers.

REVENUE CABINET
Department of Professional and Support Services
(Proposed Amendment)

103 KAR 16:070. Apportionment; sales factor.

RELATES TO: KRS 141.120
PURSUANT TO: KRS Chapter 13A
NECESSITY AND FUNCTION: KRS 141.120(8) requires that all business income of multi-state corporations be apportioned to Kentucky by multiplying the income by a fraction, the numerator of which is the property factor plus the payroll factor plus a weighted [the] sales factor and the denominator of which is four (4) [three (3)]. This regulation provides detailed guidelines for determining the sales factor of a multi-state corporation.

Section 1. General. (1) KRS 141.120(1)(g) defines "sales" to mean all gross receipts not allocated under subsections (3) through (7) of KRS 141.120. Thus, for the purposes of the sales factor, the term "sales" generally means all gross receipts derived by a corporation from transactions and activities in the course of its regular trade or business operations which produce business income.
(2) In the case of a corporation whose business activity consists of manufacturing and selling or purchasing and reselling goods or products, "sales" includes all gross receipts from the sales of goods or products (or other property which would properly be included in inventory if on hand at the close of the taxable year) held by the corporation primarily for sale in the ordinary course of its trade or business. Gross receipts for this purpose means gross sales, less returns and allowances, and includes all interest income, service charges, carrying charges, or time-price differential charges incidental to such sales. Federal and state excise taxes (including sales taxes) shall be included as part of such receipts if such taxes are passed on to the buyer or included as part of the selling price of the product.
(3) The General Assembly, during the 1985 Extraordinary Session, modified the sales factor portion of the apportionment formula. The revised formula doubles the weight of the sales factor and assigns equal weight to the property and payroll factors. The sales factor now

represents fifty (50) percent of the total apportionment formula while the property and payroll factors each represent twenty-five (25) percent. This revision is effective for taxable years beginning after July 31, 1985.

Section 2. General Business Operations. (1) The term "sales," as a general rule, also includes gross receipts derived from business transactions or activities which are incidental to the principal business activity and which are includible in business income. However, substantial amounts of gross receipts from an incidental or occasional sale of a fixed asset, used in the taxpayer's regular trade or business, will be excluded from the sales factor since the inclusion of such gross receipts will not fairly apportion to Kentucky the income derived from business activity in Kentucky. For example, gross receipts from the sale of a factory or plant will be excluded. Conversely, the inclusion in the sales factor of insubstantial amounts of gross receipts arising from incidental or occasional transactions or activities may not materially affect the income fairly attributable to the business conducted in Kentucky. A corporation may include or exclude the gross receipts from such transactions as the sale of office furniture, business automobiles, etc.

(2) If a corporation regularly derives receipts from the sale of equipment used in its business, they are included in the sales factor. For example, a truck express company owns a fleet of trucks and sells its trucks under a regular replacement program. The gross receipts from the sales of the trucks are included in the sales factor.

(3) In including or excluding gross receipts, the corporation shall be consistent in the treatment of such gross receipts in filing returns or reports to all states to which the taxpayer reports. In the event the corporation is not consistent in its reporting, it shall disclose in its Kentucky return the nature and extent of the inconsistency.

Section 3. Sales in Other Business Activities. As applied to a corporation engaged in business activity, other than the manufacturing and selling or purchasing and reselling of property, "sales" include gross receipts from the corporation's business activity:

(1) If business activity consists of providing services, such as the operation of an advertising agency, the performance of equipment service contracts, or research and development contracts; "sales" includes gross receipts from the performance of such services including fees, commissions, and similar items.

(2) In the case of cost plus fixed fee contracts, such as the operation of a government-owned plant for a fee, gross receipts includes the entire reimbursed cost, plus the fee.

(3) If the business activity is renting of real or tangible personal property, "sales" includes the gross receipts from the rental, lease, or licensing of the property.

(4) If the business activity is the sale, assignment, or licensing of intangible personal property such a patents and copyrights, "sales" includes the gross receipts therefrom.

Section 4. Sales Factor: Numerator. The numerator of the sales factor will generally include the gross receipts from sales which are attributable to Kentucky, and includes all interest income, service charges, carrying charges, or time-price differential charges incidental to such sales regardless of where the accounting records are maintained or the location of the contract or other evidence of indebtedness.

Section 5. Assignment of Sales of Tangible Personal Property to Kentucky. (1) Gross receipts from sales of tangible personal property (except sales to the United States Government) are in Kentucky the property is delivered or shipped to a purchaser within Kentucky regardless of the f.o.b. point or other conditions of sale.

(2) Gross receipts from the sales of tangible personal property to the United States Government are in Kentucky if the property is shipped from an office, store, warehouse, factory, or other place of storage in Kentucky. Only sales for which the United States Government makes direct payment to the seller, pursuant to the terms of its contract, constitute sales to the United States Government. Thus, as a general rule, sales by a subcontractor to the prime contractor, the party to the contract with the United State Government, do not constitute sales to the United States Government.

(a) Example: A corporation contracts with General Services administration to deliver trucks which were paid for by the United States Government. The United States Government is the purchaser.

(b) Example: The corporation is a subcontractor and contracts to build a component of a rocket for $1,000,000. The sale by the subcontractor to the prime contractor is not a sale to the United States Government. When the United States Government is the purchaser of property which remains in the possession of the corporation in Kentucky for further processing under another contract, or for other reasons, "shipment" is deemed to be made when the property is accepted by the United States Government.

(3) Property shall be deemed to be delivered or shipped to a purchaser within Kentucky if the recipient is located in Kentucky, even though the property is ordered from outside Kentucky. Example: The corporation, with inventory in State A, sold $100,000 of its products to a purchaser with branch stores in several states including Kentucky. The purchase order was placed by the purchaser's central purchasing department located in State B. $25,000 or the purchase order was shipped directly to purchaser's branch store in Kentucky. The branch store in Kentucky is the "purchaser within this state" with respect to $25,000 of the corporation sales.

(4) Property is delivered or shipped to a purchaser in Kentucky if the shipment terminates in Kentucky, even though the property is later transferred by the purchaser to another state. Example: The corporation makes a sale to a purchaser who maintains a central warehouse in Kentucky where all merchandise purchases are received. The purchaser reships the goods to its branch stores in other states for sale. All

products shipped to the purchaser's warehouse in Kentucky are property "delivered or shipped to a purchaser within this state."

(5) The term "purchaser within this state" includes the ultimate recipient of the property if the corporation in Kentucky, at the designation of the purchaser, delivers to or has the property shipped to the ultimate recipient in Kentucky. Example: A corporation in Kentucky sold merchandise to a purchaser in State A. The corporation directed the manufacturer of the merchandise in State B to ship the merchandise to the purchaser's customer in this state pursuant to purchaser's instruction. The sale by the corporation is "in this state."

(6) When property being shipped by a seller from the state of origin to a consignee in another state is diverted while enroute to a purchaser in Kentucky, the sales are in Kentucky. Example: The corporation, a produce grower in State A, begins shipment of perishable produce to the purchaser's place of business in State B. While enroute the produce is diverted to the purchaser's place of business in Kentucky where the corporation is subject to tax. The sale by the corporation is assigned to Kentucky.

(7) Recaptured Sales. Receipts from sale of property shipped from Kentucky to a state where taxpayer is not taxable are excluded from Kentucky sales. [for taxable years beginning after December 31, 1973. (1974 General Assembly amendment to KRS 141.120.)]

Section 6. Sales Other Than Sales of Tangible Personal Property. (1) General. KRS 141.120(8)(c)3. includes gross receipts from sales, other than sales of tangible personal property, in the numerator of the sales factor. Under that section, gross receipts are assigned to Kentucky if the income producing activity which gave rise to the receipts is performed entirely in Kentucky. If the income producing activity is performed within and without Kentucky, receipts are attributed to Kentucky if the greater proportion of the income producing activity is performed in Kentucky, based on costs of performance.

(2) Income Producing Activity; Defined. The term "income producing activity" means the act or acts directly engaged in by the corporation for the ultimate purpose of obtaining gains or profit. Such activity does not include activities performed on behalf of a corporation, such as those conducted on its behalf by an independent contractor. Accordingly, the income producing activity includes but is not limited to the following:

(a) Personal services by employees or the use of tangible and intangible property in performing a service.

(b) The sale, rental, leasing, or licensing or other use of real property.

(c) The rental, leasing, licensing or other use of tangible personal property.

(d) The sale or licensing of intangible personal property.

(3) Income Producing Activity-Location. The income producing activity is deemed performed at the situs of real, tangible, and intangible personal property or the place where personal services are rendered. The situs of real and tangible personal property is at its physical location. The situs of intangible personal property is the corporation's commercial domicile unless the property has acquired a "business situs" in: (i) the place where intangible personal property is employed as capital; or (ii) the place where the property is located if possession and control of the property is localized in connection with a trade or business so that substantial use or value attaches to the property. Example: A corporation whose principal business activity is the manufacture and sale of hot water heaters pledges bonds in Kentucky as security for the payment of taxes in connection with its business activities in Kentucky. The property has a business situs in Kentucky, therefore, interest income from such bonds is attributable to Kentucky.

(4) Costs of Performance Defined. The term "cost of performance" means direct costs determined consistent with generally accepted accounting principles and in accordance with accepted conditions or practices in the trade or business of the corporation.

(5) Assignment of Sales.

(a) If receipts from sales, other than sales of tangible personal property, do not constitute a principal source of business income and such receipts are included in the denominator of the receipts factor, these receipts are in Kentucky if:

1. The income producing activity is performed wholly within Kentucky; or

2. The income producing activity is performed both in and outside of Kentucky and a greater proportion of the income producing activity is performed in Kentucky than in any other state, based on costs of performance.

a. Example: The corporation is engaged in the heavy construction business in which it uses cranes, tractors, and earth-moving vehicles. It makes short-term rentals of the equipment when not needed on any project. The corporation rented some of the equipment to X for three (3) weeks. The equipment was used by X for two (2) weeks in Kentucky and one (1) week in State Y. The direct costs in connection with the equipment during the rental period were $500 weekly. Accordingly, the greater proportion of such costs was incurred in Kentucky. All of the rental receipts are business income and, for purposes of the sales factor, are included in the numerator.

b. Example: A corporation with commercial domicile in Kentucky manufactures and sells industrial chemicals. It owns patents on certain products. The corporation licensed production of the chemicals in foreign countries in return for royalties which are a relatively minor amount of its income. The royalties are business income and, for purposes of the sales factor, are included in the numerator.

(b) Receipts from sales, other than sales of tangible personal property which constitute a principal source of business income, are attributed to Kentucky as follows:

1. Gross receipts from sale, lease, rental or other use of real property are in Kentucky if the real property is located in Kentucky.

2. Gross receipts from rental, lease, licensing or other use of tangible personal property shall be assigned to Kentucky if the property is in Kentucky during the entire period of rental, lease, license or other use. If the property is within and without Kentucky during such period, gross receipts attributable to

Kentucky shall be based upon the ratio which the time the property was physically present or was used in Kentucky bears to the total time or use of the property everywhere during such period.

3. Gross receipts for the performance of personal services are attributable to Kentucky to the extent such services are performed in Kentucky. If the services are performed partly within and without Kentucky, such receipts shall be attributed to Kentucky based upon the ratio which the time spent in performing such services in Kentucky bears to the total time spent in performing such services everywhere. Time spent in performing services includes time spent in performing contracts or other obligations which gave rise to such gross receipts. Personal service not directly connected with the performance of the contract or other obligation; such as, time spent in negotiating the contract is excluded from the computations.

a. Example: the corporation, a road show, presents theatrical performance at various locations in State X and in Kentucky during the taxable year. All gross receipts from performances presented in Kentucky are attributed to Kentucky.

b. Example: The corporation, a public opinion survey corporation conducted a poll by its employees in State S and in Kentucky for $9,000. The project required 600 man hours to obtain the basic data and prepare the survey report. 200 of the 600 man hours were spent in Kentucky. The receipts attributable to Kentucky are $3,000 (200 man hours divided by 600 man hours times $9,000).

4. Gross receipts from intangible personal property shall be attributed to Kentucky based upon the ratio which the total property and payroll factors in Kentucky bears to the total of the property and payroll factors everywhere for the taxable year.

5. This regulation shall also apply to sales, other than sales of tangible personal property, to the United States Government.

GARY W. GILLIS, Secretary

APPROVED BY AGENCY: June 12, 1986

FILED WITH LRC: June 12, 1986 at 3 p.m.

PUBLIC HEARING SCHEDULED: A public hearing on this regulation will be held on July 23, 1986 at 10 a.m. in Room 406 of the Capitol Annex, Frankfort, Kentucky. If no written notice of intent to attend the public hearing is received within five days before the scheduled hearing, the hearing will be cancelled. Those interested in attending shall notify in writing: Scott Akers, Revenue Cabinet, Division of Tax Policy and Legal Services, New Capitol Annex Building, Frankfort, Kentucky 40620.

REGULATORY IMPACT ANALYSIS

Agency Contact Person: Scott Akers

(1) Type and number of entities affected: The General Assembly, during its 1985 Extraordinary Session, enacted legislation to double weight the sales factor thus making the denominator of the corporation income tax apportionment formula four (4) instead of three (3). This applies to all multistate corporate taxpayers. Prior law apportioned income based upon an apportionment formula which gave equal weight to the sales, property, and payroll factors.

(a) Direct and indirect costs or savings to those affected:

1. First year: None

2. Continuing costs or savings: None

3. Additional factors increasing or decreasing costs (note any effects upon competition): None

(b) Reporting and paperwork requirements: No change.

(2) Effects on the promulgating administrative body:

(a) Direct and indirect costs or savings:

1. First year: None

2. Continuing costs or savings: None

3. Additional factors increasing or decreasing costs: None

(b) Reporting and paperwork requirements: No additional reporting or paperwork.

(3) Assessment of anticipated effect on state and local revenues: Decrease in state revenues by approximately $2.3 million per year.

(4) Assessment of alternative methods; reasons why alternatives were rejected: None

(5) Identify any statute, administrative regulation or government policy which may be in conflict, overlapping, or duplication: None

(a) Necessity of proposed regulation if in conflict: N/A

(b) If in conflict, was effort made to harmonize the proposed administrative regulation with conflicting provisions: N/A

(6) Any additional information or comments:

Tiering:
Was tiering applied? No. Tiering is not applicable since the law applies to all corporate taxpayers.

REVENUE CABINET
Department of Professional and Support Services
(Proposed Amendment)

103 KAR 16:080. Apportionment; property factor.

RELATES TO: KRS 141.120

PURSUANT TO: KRS Chapter 13A

NECESSITY AND FUNCTION: KRS 141.120(8) requires that all business income of multi-state corporations be apportioned to Kentucky by multiplying the income by a fraction, the numerator of which is the property factor plus the payroll factor plus a weighted [the] sales factor and the denominator of which is four (4) [three (3)]. This regulation provides detailed guidelines for determining the property factor of a multi-state corporation.

Section 1. General. The property factor includes all real and tangible personal property owned or rented and used during the taxable year to produce business income, except pollution control property located in Kentucky for which a a tax exemption certificate is issued by the Revenue Cabinet (formerly by the Natural Resources and Environmental Protection Cabinet). The term "real and tangible personal property" includes land, buildings, machinery, stocks of goods, equipment and other real and tangible personal property used in the production of business income but does not include coin or currency. Property used in production of nonbusiness income which is directly allocated shall be excluded from the factor. Property used in both the production of business and nonbusiness income shall be included in the factor only to the extent the property was used

in connection with the production of business income. The method of determining the value to be included in the factor will depend upon the facts of each case. The property factor shall include the average value of property includible in the factor.

Section 2. Property Used for Business Income. (1) Property shall be included in the property factor if it is actually used or is available for or capable of being used during the taxable year for the production of business income. Property held as reserves or standby facilities or property held as a reserve source of materials shall be included in the factor. For example, a plant temporarily idle or raw material reserves not currently being processed are included in the factor. Property or equipment under construction during the income year (except inventoriable goods in process) shall be excluded from the factor until it is actually used for the production of business income. If the property is partially used for the production of business income while under construction, the value of the property to the extent used shall be included in the property factor. Property used in the production of business income shall remain in the property factor until its permanent withdrawal is established by an identifiable event such as its sale or conversion to the production of nonbusiness income;

(a) Example: On June 28, 1985 [30, 1975], the corporation closed its manufacturing plant in State X and held it for sale. The property remained vacant until its sale on October 29, 1986 [1976]. The value of the manufacturing plant is included in the property factor until November 3, 1986 [1, 1976].

(b) Example: Same as above except that the property was rented until it was sold. The rental income is business income and the plant is included in the property factor until November 1, 1986 [1976].

(c) Example: On June 28, 1985 [30, 1975], the corporation closed its manufacturing plant and leased the building under a five (5) year lease on October 1, 1985 [1975]. The plant is included in the property factor until October 1, 1985 [1975].

(d) Example: The corporation operates a chain of retail grocery stores. On June 28, 1985 [30, 1975], the corporation closes Store A. It is then remodeled into three (3) small retail stores such as a dress shop, dry cleaning, and barber shop, which are leased on November 3, 1985 [1975]. The property is removed from the property factor on July 1, 1985 [1975].

(2) In Example (a), the plant was sold shortly after it was put up for sale. Cases will vary as to the lapse of time until there is a sale. If a closed plant remains unsold for five (5) years after it is put up for sale, it is removed from the property factor.

Section 3. Consistency in Reporting. The corporation shall be consistent in the valuation of property and in excluding or including property in the property factor in filing returns or reports in all states. In the event the corporation is not consistent in its reporting, it shall disclose in its Kentucky return the nature and extent of the inconsistency.

Section 4. Property Factor: Numerator. (1) The numerator of the property factor shall include the average value of the corporation's real and tangible personal property owned or rented and used in Kentucky during the taxable year for the production of business income.

(2) Property in transit between locations of the corporation to which it belongs shall be considered at the destination for purposes of the property factor. Property in transit between a buyer and seller which is included by a corporation in the denominator of its property factor in accordance with its regular accounting practices shall be included in the numerator according to the state of destination.

(3) The value of mobile or movable property such as construction equipment, trucks or leased electronic equipment which are located within and without Kentucky during the taxable year shall be determined, for purposes of the numerator of the factor, on the basis of total time within the state during the taxable year. An automobile assigned to a traveling employee shall be included in the numerator of the factor of the state to which the employee's compensation is assigned under the payroll factor or in the numerator of the state in which the automobile is licensed.

Section 5. Valuation of Owned Property. (1) Property owned by the corporation shall be valued at original cost. As a general rule "original cost" is deemed to be the basis of the property for federal income tax purposes (prior to any federal adjustments) at the time of acquisition by the corporation and adjusted by subsequent capital additions or improvements thereto and partial disposition thereof, by reason of sale, exchange, abandonment, etc.

(a) Example: On January 1, 1976 [1966], corporation acquired a factory building in Kentucky at a cost of $500,000 and on July 1, 1978 [1968], expended $100,000 for major remodeling of the building. It files its return for 1985 [1975] on the calendar year basis. Depreciation deduction of $22,000 was claimed on the building for its return for 1985 [1975]. The value of the building includible in the numerator and denominator of the property factor is $600,000 as the depreciation deduction is not taken into account in determining the value of the building.

(b) Example: In 1985 [1977], X corporation merges into Y corporation in a taxfree reorganization under the Internal Revenue Code. At the time of the merger, X owns a factory which X built in 1980 [1972] at a cost of $1,000,000. X has been depreciating the factory at a rate of two (2) percent per year, and its basis in X's hands at the time of the merger is $900,000. Since the property is acquired by Y in a transaction in which, under the Internal Revenue Code, its basis in Y's hands is the same as its basis in X's hands, Y includes the property in Y's property factor at X's original cost, without adjustment for depreciation, i.e., $1,000,000.

(c) Example: Corporation Y acquires the assets of corporation X in a liquidation by which Y is entitled to use its stock cost as the basis of the X assets under Section 334(b)(2) of the 1954 Internal Revenue Code (i.e., stock possessing eighty (80) percent control is purchased and liquidated within two (2) years). Under these

circumstances, Y's cost of the assets is the purchase price of the X stock, prorated over the X assets.

(2) If original cost of property is unascertainable, nominal, or zero, the property is included in the factor at its fair market value at the date of acquisition by the corporation.

(3) Inventory of stock of goods shall be included in the factor by valuation method used for federal income tax purposes.

(4) Property acquired by gift or inheritance shall be included in the factor at its basis for depreciation for federal income tax purposes.

Section 6. Rented Property. (1)(a) Property rented by a corporation is valued at eight (8) times the net annual rental rate. The net annual rental rate is the total annual rental paid, less total annual rental received from subrentals. In exceptional cases this may result in a negative value or a clearly inaccurate valuation. In those instances any other method which will properly reflect the value may be required by the cabinet or may be requested by the corporation, but in no case shall the net annual rental rate be less than an amount which bears the same ratio to the total annual rental rate paid by the taxpayer as the rental property used by the corporation bears to all the rental property:

(b) Example: The corporation rents a ten (10) story building at an annual rental rate of $1,000,000. It occupies two (2) stories and sublets eight (8) stories for $1,000,000 a year. The net annual rental rate must not be less than two-tenths (2/10) of the annual rental rate for the entire year or $200,000.

(2) If property is used at no charge or rented for a nominal rate, the property shall be included in the property factor on the basis of a reasonable market rental rate.

(3) The "annual rental rate" is the amount paid as rental for the property for a twelve (12) month period, or the "annual rent." If property is rented for less than a twelve (12) month period, the net rent paid for the actual period of rental shall constitute the "annual rental rate" for the taxable year. However, if a corporation has rented property for a term of twelve (12) or more months and the current tax period covers a period of less than twelve (12) months due, for example, to a reorganization or change of accounting period, the net rent paid for the short tax period shall be annualized. If the rental term is for less than twelve (12) months, the rent shall not be annualized beyond its term. Rent shall not be annualized because of the uncertain duration when the rental term is on a month to month basis.

(a) Example: Corporation A which ordinarily files its return on a calendar year is merged into corporation B on April 30. The net rent paid under a lease with five (5) years remaining is $2,500 a month. The rent for the tax period January 1 to April 30 is $10,000. After the rent is annualized the net rent is $30,000 ($2,500 times thirteen (13)).

(b) Example: Same facts as in Example (a) except that the lease would have terminated on August 31. In this case the annualized net rent is $20,000 ($2,500 times eight (8)).

(4) "Annual rent" is the actual sum of money or other consideration payable, directly or indirectly, by the corporation or for its benefit for the use of the property and includes:

(a)1. Any amount payable for the use of real or tangible personal property whether designated as a fixed sum of money or as a percentage of sales, profits or otherwise.

2. Example: A corporation pursuant to the terms of a lease, pays a lessor $1,000 per month as a base rental and at the end of the year pays the lessor one (1) percent of its gross sales of $400,000. The annual rent is $16,000 ($12,000 plus one (1) percent of $400,000 or $4,000).

(b) Any amount payable as additional rent or in lieu of rents, such as interest, taxes, insurance, repairs or any other items which are required to be paid by the terms of the lease or other arrangement, and does not include amounts paid as service charges, such as utilities, janitor services, etc. If a payment includes rent and other charges unsegregated, the amount of rent shall be determined by consideration of the relative values of the rent and the other items.

1. Example: A corporation, pursuant to the terms of a lease, pays the lessor $12,000 a year rent plus taxes in the amount of $2,000 and interest on a mortgage in the amount of $1,000. The annual rent is $15,000.

2. Example: A corporation stores part of its inventory in a public warehouse. The total charge for the year was $1,000 of which $700 was for the use of storage space and $300 for inventory insurance, handling and shipping charges, and COD collections. The annual rent is $700.

(5) "Annual rent" does not include incidental day-to-day expenses such as hotel or motel accommodations, daily rental of automobiles, etc.

(6) Leasehold improvements shall, for the purposes of the property factor, be treated as property owned by the corporation regardless of whether the corporation is entitled to remove the improvements or the improvements revert to the lessor upon expiration of the lease. The original cost of leasehold improvements shall be included in the factor.

Section 7. Averaging Property Values. (1) As a general rule the average value of property owned or leased and used by a corporation shall be determined by averaging the values at the beginning and ending of the income year. However, the cabinet may require or allow averaging by monthly values if it is required to properly reflect the average value of the corporation's property for the taxable year.

(2) Averaging by monthly values will be generally applied if substantial fluctuations in the values of the property exist during the taxable year or where property is acquired after the beginning of the taxable year or disposed of before the end of the taxable year:

(a) Example: The monthly value of the corporation's property was as follows: January $2,000; February $2,000; March $3,000; April $3,500; May $4,500; June $10,000; July $15,000; August $17,000; September $23,000; October $25,000; November $13,000; December $2,000. Total $120,000.

(b) The average value of property includible in the property factor for the taxable year is determined as follows: $120,000 divided by twelve (12) equals $10,000.

GARY W. GILLIS, Secretary
APPROVED BY AGENCY: June 12, 1986
FILED WITH LRC: June 12, 1986 at 3 p.m.
PUBLIC HEARING SCHEDULED: A public hearing on this regulation will be held on July 23, 1986 at 10 a.m. in Room 406 of the Capitol Annex, Frankfort, Kentucky. If no written notice of intent to attend the public hearing is received within five days before the scheduled hearing, the hearing will be cancelled. Those interested in attending shall notify in writing: Scott Akers, Revenue Cabinet, Division of Tax Policy and Legal Services, New Capitol Annex Building, Frankfort, Kentucky 40620.

REGULATORY IMPACT ANALYSIS

Agency Contact Person: Scott Akers
(1) Type and number of entities affected: The General Assembly, during its 1985 Extraordinary Session, enacted legislation to double weight the sales factor thus making the denominator of the corporation income tax apportionment formula four (4) instead of three (3). This applies to all multistate corporate taxpayers. Prior law apportioned income based upon an apportionment formula which gave equal weight to the sales, property, and payroll factors. Technical changes are also included in the amended regulation.
(a) Direct and indirect costs or savings to those affected:
1. First year: None
2. Continuing costs or savings: None
3. Additional factors increasing or decreasing costs (note any effects upon competition): None
(b) Reporting and paperwork requirements: No change
(2) Effects on the promulgating administrative body:
(a) Direct and indirect costs or savings:
1. First year: None
2. Continuing costs or savings: None
3. Additional factors increasing or decreasing costs: None
(b) Reporting and paperwork requirements: No additional reporting or paperwork.
(3) Assessment of anticipated effect on state and local revenues: Decrease in state revenues by approximately $2.3 million per year.
(4) Assessment of alternative methods; reasons why alternatives were rejected: None
(5) Identify any statute, administrative regulation or government policy which may be in conflict, overlapping, or duplication: None
(a) Necessity of proposed regulation if in conflict: N/A
(b) If in conflict, was effort made to harmonize the proposed administrative regulation with conflicting provisions: N/A
(6) Any additional information or comments:

Tiering:
Was tiering applied? No. Tiering is not applicable since the law applies to all corporate taxpayers.

REVENUE CABINET
Department of Professional and Support Services
(Proposed Amendment)

103 KAR 16:090. Apportionment; payroll factor.

RELATES TO: KRS 141.120
PURSUANT TO: KRS Chapter 13A
NECESSITY AND FUNCTION: KRS 141.120(8) requires that all business income of multi-state corporations be apportioned to Kentucky by multiplying the income by a fraction, the numerator of which is the property factor plus a weighted [the] payroll factor plus the sales factor and the denominator of which is four (4) [three (3)]. This regulation provides a detailed explanation of the payroll apportionment factor.

Section 1. General. (1) The payroll factor shall include the total amount paid by the corporation for compensation during the taxable year.
(2) The total amount "paid" to employees is determined by the corporation's accounting method. If the corporation has adopted the accrual method of accounting, all compensation properly accrued shall be deemed to have been paid. Notwithstanding the corporation's method of accounting, compensation paid to employees may be included in the payroll factor by the cash method if the corporation is required to report compensation under such method for unemployment compensation purposes. The corporation shall be consistent in the treatment of compensation paid in filing returns or reports to all states. If the corporation is not consistent in its reporting, it shall disclose in its Kentucky return the nature and extent of the inconsistency.

Section 2. Compensation. (1) The term "compensation" means wages, salaries, commissions and any other form of remuneration paid to employees for personal services. Payments made to an independent contractor or any other person not properly classifiable as an employee are excluded. Only amounts paid directly to employees are included in the payroll factor. Amounts considered paid directly include the value of board, rent, housing, lodging, and other benefits or services furnished to employees by the corporation in return for personal services provided that such amounts constitute income to the recipient under the Federal Internal Revenue Code. In the case of employees not subject to the Federal Internal Revenue Code, e.g., those employed in foreign countries, the determination of whether such benefits or services would constitute income to the employees shall be made as though such employees were subject to the Federal Internal Revenue Code.
(2) The payroll factor includes only compensation which is attributable to business income subject to apportionment. The compensation of any employee whose activities are connected primarily with nonbusiness income shall be excluded from the factor.
(a) Example: The corporation uses some of its employees in constructing a storage building which will be used for production of business income. The wages paid to those employees is treated as a capital expenditure. The amount of such wages is included in the payroll factor.

(b) Example: The corporation owns various securities from which nonbusiness income is derived. The management of the investment portfolio is the only duty of Mr. X, an employee. The salary paid to Mr. X is excluded from the payroll factor.

Section 3. Employee. The term "employee" means: (1) Any officer of a corporation, or

(2) Any individual who, under the usual common-law rules applicable in determining the employer-employee relationship, has the status of an employee. Generally, a person will be considered an employee if he is included by the corporation as an employee for purposes of the payroll taxes imposed by the Federal Insurance Contributions Act; except that, since certain individuals are included within the term "employees" in the Federal Insurance Contributions Act who would not be employees under the usual common-law rules, it may be established that a person who is included as an employee for purposes of the Federal Insurance Contributions Act is not an employee for purposes of this regulation.

Section 4. Payroll Factor-Numerator. (1) The numerator of the payroll factor is the total amount paid in Kentucky during the taxable year by the corporation for compensation. The tests in KRS 141.120(8)(b), to be applied in determining whether compensation is paid in Kentucky are derived from the model unemployment compensation act. Accordingly, if compensation paid to employees is included in the payroll factor by the cash method of accounting, or if the corporation is required to report compensation under such method for unemployment compensation purposes, it shall be presumed that the total wages reported by the corporation to Kentucky for unemployment compensation purposes constitutes compensation paid in Kentucky except for compensation excluded by this regulation. The presumption may be overcome by satisfactory evidence that an employee's compensation is not properly reportable to Kentucky for unemployment compensation purposes.

(2) Compensation is paid in Kentucky if any one of the following tests, applied consecutively, are met:

(a) The employee's service is performed entirely within Kentucky.

(b) The employee's service is performed both within and without Kentucky, but the service performed without Kentucky is incidental to the employee's service in Kentucky. The word "incidental" means any service which is temporary or transitory in nature, or which is rendered in connection with an isolated transaction.

(c) If the employee's services are performed both within and without Kentucky, the employee's compensation will be attributed to Kentucky:

1. If the employee's base of operations is in Kentucky; or

2. If there is no base of operations in any state in which some part of the service is performed but the place from which the service is directed or controlled is in Kentucky; or

3. If the base of operations or the place from which the service is directed or controlled is not in any state in which some part of the service is performed, but the employee's residence is in Kentucky.

(3) The term "base of operation" is the place of more or less permanent nature from which the employee starts his work and to which he customarily returns in order to receive instructions from the corporation or communications from his customers or other persons, or to replenish stock or other materials, repair equipment, or perform any other functions necessary to the exercise of his trade or profession at some other point or points.

(4) The term "place from which the service is directed or controlled" refers to the place from which the power to direct or control is exercised by the corporation.

Section 5. Payroll Factor-Denominator. (1) The denominator of the payroll factor is the total compensation paid everywhere during the taxable year. Accordingly, compensation paid to employees whose services are performed entirely in a state where the corporation is exempt from taxation, for example, by Public Law 86-272, are included in the denominator of the payroll factor.

(2) Example: A corporation, has employees in its state of legal domicile (State A) and is taxable in State B. In addition the corporation has other employees whose services are performed entirely in State C where the corporation is exempt from taxation by Public Law 86-272. The compensation paid employees in State C will be assigned to State C where their services are performed (i.e. included in the denominator only of the payroll factor) even though the corporation is not taxable in State C.

GARY W. GILLIS, Secretary

APPROVED BY AGENCY: June 12, 1986

FILED WITH LRC: June 12, 1986 at 3 p.m.

PUBLIC HEARING SCHEDULED: A public hearing on this regulation will be held on July 23, 1986 at 10 a.m. in Room 406 of the Capitol Annex, Frankfort, Kentucky. If no written notice of intent to attend the public hearing is received within five days before the scheduled hearing, the hearing will be cancelled. Those interested in attending shall notify in writing: Scott Akers, Revenue Cabinet, Division of Tax Policy and Legal Services, New Capitol Annex Building, Frankfort, Kentucky 40620.

REGULATORY IMPACT ANALYSIS

Agency Contact Person: Scott Akers

(1) Type and number of entities affected: The General Assembly, during its 1985 Extraordinary Session, enacted legislation to double weight the sales factor thus making the denominator of the corporation income tax apportionment formula four (4) instead of three (3). This applies to all multistate corporate taxpayers. Prior law apportioned income based upon an apportionment formula which gave equal weight to the sales, property, and payroll factors.

(a) Direct and indirect costs or savings to those affected:

1. First year: Slight savings in Kentucky corporation income tax.

2. Continuing costs or savings: Same

3. Additional factors increasing or decreasing costs (note any effects upon competition): None

(b) Reporting and paperwork requirements: Slight increase.

(2) Effects on the promulgating administrative body:
(a) Direct and indirect costs or savings:
1. First year: Nominal increase in audit time.
2. Continuing costs or savings: Same
3. Additional factors increasing or decreasing costs: None
(b) Reporting and paperwork requirements: Slight amount of additional paperwork.
(3) Assessment of anticipated effect on state and local revenues: Decrease in state revenues by approximately $2.3 million per year.
(4) Assessment of alternative methods; reasons why alternatives were rejected: None
(5) Identify any statute, administrative regulation or government policy which may be in conflict, overlapping, or duplication: None
(a) Necessity of proposed regulation if in conflict: N/A
(b) If in conflict, was effort made to harmonize the proposed administrative regulation with conflicting provisions: N/A
(6) Any additional information or comments:

Tiering:
Was tiering applied? No. The law applies to all corporate taxpayers.

REVENUE CABINET
Department of Professional and Support Services
(Proposed Amendment)

103 KAR 17:080. Retirement income.

RELATES TO: KRS 6.525, 21.470, 61.690, 141.021, 164.2871
PURSUANT TO: KRS Chapter 13A
NECESSITY AND FUNCTION: This regulation describes certain retirement income which is exempt or partially exempt from Kentucky income tax and provides rules for calculating the exempt portion of such income.

Section 1. General. Retirement income, with exceptions explained below, is included in gross income under the provisions of the Internal Revenue Code.

Section 2. Exempt Retirement Income. Retirement income received from the Social Security Administration and the Railroad Retirement Board (including supplemental benefits) is exempt from income tax. The following retirement income is specifically exempt by Kentucky law which established the retirement systems:
(1) Kentucky teachers retirement income;
(2) Kentucky state employees and county employees retirement income; [and]
(3) Kentucky judicial retirement income;
(4) Kentucky legislative retirement income; and
(5) Kentucky state supported institutions of higher education retirement income (effective with income received after July 14, 1986).

Section 3. Military and Civil Service Retirement. Federal retirement income and military service retirement income received by persons fifty (50) years of age or older may be excluded; limited to $4,000 of such retirement income. The $4,000 maximum exclusion is reduced by earned income, as defined in Section 911(d)(2) [(b)] of the Internal Revenue Code. The reduction applies as follows:

If Earned Income from Other Sources is:	The Maximum Retirement Exclusion is:
$3,000 or less	$4,000
$3,001 to $4,000	3,000
$4,001 to $5,000	2,000
$5,001 to $6,000	1,000
Over $6,000	-0-

GARY W. GILLIS, Secretary
APPROVED BY AGENCY: June 12, 1986
FILED WITH LRC: June 12, 1986 at 3 p.m.
PUBLIC HEARING SCHEDULED: A public hearing on this regulation will be held on July 23, 1986 at 10 a.m. in Room 406 of the Capitol Annex, Frankfort, Kentucky. If no written notice of intent to attend the public hearing is received within five days before the scheduled hearing, the hearing will be cancelled. Those interested in attending shall notify in writing: Scott Akers, Revenue Cabinet, Division of Tax Policy and Legal Services, New Capitol Annex Building, Frankfort, Kentucky 40620.

REGULATORY IMPACT ANALYSIS

Agency Contact Person: Scott Akers
(1) Type and number of entities affected: The 1986 General Assembly enacted legislation to exempt retirement income received by any employee of a Kentucky state institution of higher learning and the amendment to the regulation also includes the previously enacted legislative retirement system. This regulation is amended to include such retirement income with other retirement income specifically exempted by Kentucky law.
(a) Direct and indirect costs or savings to those affected:
1. First year: There is a Kentucky income tax savings by retired employees of Kentucky state institutions of higher learning and retired legislators. The amount of savings depends upon amount of eligible retirement income.
2. Continuing costs or savings: Same as first year.
3. Additional factors increasing or decreasing costs (note any effects upon competition): None
(b) Reporting and paperwork requirements: These income exemptions simplify filing of Kentucky individual income tax returns by those individuals whose retirement income is exempted.
(2) Effects on the promulgating administrative body:
(a) Direct and indirect costs or savings:
1. First year: Nominal savings in audit costs since retiremet income from all Kentucky state institutions of higher learning is now exempt.
2. Continuing costs or savings: Same
3. Additional factors increasing or decreasing costs: None
(b) Reporting and paperwork requirements: Slight decrease
(3) Assessment of anticipated effect on state and local revenues: Nominal decrease in state revenue.
(4) Assessment of alternative methods; reasons why alternatives were rejected: None. Income can be exempted only by the General Assembly.
(5) Identify any statute, administrative regulation or government policy which may be in conflict, overlapping, or duplication: None

(a) Necessity of proposed regulation if in conflict: N/A
(b) If in conflict, was effort made to harmonize the proposed administrative regulation with conflicting provisions: N/A
(6) Any additional information or comments:

Tiering:
Was tiering applied? No. Tiering is not applicable since this regulation applies to all taxpayers with this type of income.

FINANCE AND ADMINISTRATION CABINET
KENTUCKY RETIREMENT SYSTEMS
(Proposed Amendment)

105 KAR 1:010. Contributions and interest rates.

RELATES TO: KRS 16.505 to 16.652, 61.510 to 61.705 [61.702], 78.510 to 78.852
PURSUANT TO: KRS 16.576, 16.640, 61.559, 61.645, 78.780
NECESSITY AND FUNCTION: KRS 16.645, 61.565 and 78.545 require the board to determine the employer contribution rate based on an actuarial valuation. KRS 61.552 requires the board to adopt a rate of interest payable on a recontribution of refund. KRS 16.560, 61.575 and 78.640 provide that the board may determine the rate of interest payable on the members' contribution account. KRS 61.670 provides that the board shall adopt such actuarial tables as are necessary for the administration of the system. This regulation sets the employer contribution rates, and rate of interest on a recontribution of refund and member contribution account and
establishes the actuarial tables for computation of retirement allowances for members of the Kentucky Employees Retirement System (KERS), County Employees Retirement System (CERS) and State Police Retirement System (SPRS).

Section 1. The employer contribution rate payable by a participating agency applicable to creditable compensation earned on or after August 1, 1986 [July 1, 1985], shall be as follows:

KRS 61.565	State Police Retirement System.....18.25%.[17 1/2%]
KRS 61.565	Kentucky Employees Retirement System.....7.45%.[7 1/4%]
KRS 61.565	County Employees Retirement System.....5.75%.[5 1/4%]
KRS 61.592	Kentucky Employees Retirement System.....14%
KRS 61.592	County Employees Retirement System.....14%

Section 2. The interest rate on a recontribution of refund as provided under KRS 61.552 shall be as follows:
(1) For time elapsed from date of refund through June 30, 1982, six (6) percent compounded annually.
(2) For time elapsed from July 1, 1982 (or date of refund if after July 1, 1982) through July 31, 1986 seven and one-half (7 1/2) percent compounded annually.
(3) For the time elapsed from August 1, 1986 (or date of refund if after August 1, 1986) eight (8) percent compounded annually.
(4) The interest rate on recontribution of refund made by an employee who has been reinstated by order of the Personnel Board or by court order or by order of the Human Rights Commission shall be at the rate of zero (0) percent, if the refund is recontributed within a reasonable period of time.

Section 3. The legal rate of interest as referenced in Section 7 of regulation 200 KAR 12:010 (a regulation relating to computing back pay after reinstatement) shall be the actuarial assumed interest rate set forth in Section 1 of 105 KAR 1:040.

Section 4. Interest creditable on a member's accumulated contributions in accordance with KRS 16.560, 61.575, and 78.640 shall be at the rate between two and one-half (2 1/2) percent and [of] six (6) percent as determined by the board.

Section 5. Reduction factors to be applied to determine immediate annuity equivalent to annuity deferred to Normal Retirement age under KRS 16.577, 16.578, 61.595, 61.640 and 61.680 shall be as provided in Table G, unless the provisions of subsections (1) through (5) of this section are applicable and result in a higher percentage payable:
(1) A SPRS, CERS Hazardous or KERS Hazardous duty member who is age fifty (50) or older and would attain twenty (20) years of service (fifteen (15) years of which would be current service) prior to age fifty-five (55), if his employment had continued shall have his retirement benefit computed based on the appropriate factors as follows:

TABLE A

Years Required to Complete 20 Years Service	Percentage Payable
1	94.5%
2	89.0%
3	83.5%
4	78.0%
5	72.5%

(2) A KERS or CERS non-hazardous member who is age fifty-five (55) or older and would attain thirty (30) years of service (fifteen (15) years of which would be current service) prior to age sixty-five (65) if employment were continued shall have benefits computed using the appropriate factor as follows:

TABLE B

Years Required to Complete 30 Years Service	Percentage Payable
0	100.0%
1	95.0%
2	90.0%

3	85.0%
4	80.0%
5	75.0%
6	71.0%
7	67.0%
8	63.0%
9	59.0%
10	55.0%

(3) A KERS or CERS non-hazardous member who dies prior to age fifty-five (55) or who retires prior to age fifty-five (55) with twenty-five (25) or more years of service (at least fifteen (15) of which are current service) shall have benefits computed using the appropriate factor as follows:

TABLE C

Years Required to Complete 30 Years Service	Percentage Payable
0	100.0%
1	95.0%
2	90.0%
3	85.0%
4	80.0%
5	75.0%

(4) A KERS or CERS non-hazardous member with less than twenty-five (25) years of service who dies prior to age fifty-five (55) or who retires prior to age fifty-five (55) based on TRS, SPRS, CERS Hazardous or KERS Hazardous Early retirement eligibility, and would have attained thirty (30) or more years of service (fifteen (15) of which would be current service) on or before reaching his 65th birthday, if employment were continued, shall have benefits computed by first multiplying his deferred benefit by the percentage payable as determined from Table B based on the number of years required to complete thirty (30) years of service and then multiply this result by the percentage payable as determined from Table D based on said member's age at the time of death or early retirement.

TABLE D

Years Prior to Age 55	Percentage Payable
1	97.0%
2	94.0%
3	91.0%
4	88.0%
5	85.0%
6	82.0%
7	79.0%
8	76.0%
9	73.0%
10	70.0%

(5) A SPRS, CERS Hazardous or KERS Hazardous member who dies prior to age fifty (50) and would have attained twenty (20) or more years of service (fifteen (15) of which would be current service) on or before reaching his 55th birthday, if employment were continued, shall have benefits payable as determined from Table E based on the number of years required to complete twenty (20) years of service and then multiply this result by the percentage payable as determined from Table F based on said member's age at the time of death.

TABLE E

Years Required to Complete 20 Years Service	Percentage Payable
0	100.0%
1	95.0%
2	90.0%
3	85.0%
4	80.0%
5	75.0%
6	71.0%
7	67.0%
8	63.0%
9	59.0%
10	55.0%

TABLE F

Years Prior to Age 50	Percentage Payable
1	97.0%
2	94.0%
3	91.0%
4	88.0%
5	85.0%
6	82.0%
7	79.0%
8	76.0%
9	73.0%
10	70.0%

TABLE G

Early Age	Normal Retirement Age 65	55
64	95.0%	
63	90.0%	
62	85.0%	
61	80.0%	
60	75.0%	
59	71.0%	
58	67.0%	
57	63.0%	
56	59.0%	
55	55.0%	
54	51.3%	94.5%
53	47.9%	89.0%
52	44.9%	83.5%
51	42.1%	78.0%
50	39.5%	72.5%
49	37.1%	68.8%
48	34.9%	65.2%
47	33.0%	61.7%
46	31.3%	58.2%
45	29.9%	54.7%
44	28.7%	51.3%
43	27.6%	47.9%
42	26.7%	44.9%
41	25.8%	42.1%
40	25.1%	39.5%
39	24.4%	37.1%
38	23.8%	34.9%
37	23.2%	33.0%
36	22.5%	31.3%
35	21.9%	29.9%
34	21.2%	28.7%
33	20.6%	27.6%
32	20.0%	26.7%

31	19.5%	25.8%
30	19.0%	25.1%
29	18.5%	24.4%
28	18.0%	23.8%
27	17.5%	23.2%
26	17.0%	22.5%
25	16.5%	21.9%

The member's exact age in years and months shall be determined and the above factors shall be used to extrapolate in order to determine the appropriate factors.

(6) Benefits paid in the event of death prior to retirement pursuant to subsection (1) through (5) of this section, shall be reduced as required by KRS 61.640 and as determined in "Contingent Annuity Factors," "Integrated Survivor Factors" and "Ten Year Certain Factors" incorporated herein by reference in this regulation.

(7) The provisions of this section shall become effective for members retiring on August 1, 1986 [1984] and thereafter.

BOBBY J. McKEE, General Manager
JOHN D. ROBEY, Chairman

APPROVED BY AGENCY: May 20, 1986
FILED WITH LRC: May 30, 1986 at 3 p.m.
PUBLIC HEARING SCHEDULED: A public hearing is scheduled for 3 p.m. on Monday, July 21, 1986, for persons interested in the subject matter of this proposed regulation. The hearing will be held at the Kentucky Retirement Systems office at 1260 Louisville Road in Frankfort, Kentucky. Submit comments or questions to Bobby J. McKee, General Manager, Kentucky Retirement Systems, 1260 Louisville Road, Frankfort, Kentucky 40601.

REGULATORY IMPACT ANALYSIS

Agency Contact Person: Bobby J. McKee

(1) Type and number of entities affected: Approximately 800 state, city and county agencies.

(a) Direct and indirect costs or savings to those affected:

1. First year: +$2.4 million for CERS agencies. +$1.6 million for KERS agencies. +$161,000 for SPRS.

2. Continuing costs or savings: Costs equal to above.

3. Additional factors increasing or decreasing costs (note any effects upon competition): None

(b) Reporting and paperwork requirements: No change.

(2) Effects on the promulgating administrative body: Cash receipts will increase sufficiently to fund increased benefits and maintain actuarial soundness.

(a) Direct and indirect costs or savings:

1. First year:

2. Continuing costs or savings:

3. Additional factors increasing or decreasing costs:

(b) Reporting and paperwork requirements: No change.

(3) Assessment of anticipated effect on state and local revenues: +0.50% for CERS nonhazardous agencies. +0.20% for KERS nonhazardous agencies. +0.75% for SPRS.

(4) Assessment of alternative methods; reasons why alternatives were rejected: Statutes dictate procedures. No alternative considered.

(5) Identify any statute, administrative regulation or government policy which may be in conflict, overlapping, or duplication: None

(a) Necessity of proposed regulation if in conflict:

(b) If in conflict, was effort made to harmonize the proposed administrative regulation with conflicting provisions:

(6) Any additional information or comments: Employer contributions increased in accordance with KRS 61.565.

Tiering:
Was tiering applied? No. Regulation applies equally to all participating agencies and otherwise establishes internal operating procedures in accordance with statutory requirements.

LOCAL MANDATE IMPACT STATEMENT

Regulation No.: 105 KAR 1:010
SUBJECT/TITLE: Contributions and interest rates.
SPONSOR: Kentucky Retirement Systems
NOTE SUMMARY
LOCAL GOVERNMENT MANDATE: Yes
TYPE OF MANDATE: KRS 61.565
LEVEL(S) OF IMPACT: City; County; Urban County Government
BUDGET UNIT(S) IMPACT: Will impact city, county and urban-county governments that employ nonhazardous participants in the County Employee Retirement Systems. Employer contribution is increased by 0.50% of salaries.
FISCAL SUMMARY:

Fiscal Estimates	First Fiscal Year 1986-1987
Revenues (+/-)	0
Expenditures (+/-)	+$1,910,085
Net Effect	-$1,910,085

MEASURE'S PURPOSE: Increase the employer contribution rate August 1, 1986, in accordance with KRS 61.565 to cover increased liability resulting from benefit factor increase for nonhazardous employees. The increase was recommended by an actuarial impact study done in response to HB 348.
PROVISION/MECHANICS: Agencies have been notified in writing of the increase. Collection will be done by existing methods with no increase in administrative cost or paperwork.
FISCAL EXPLANATION: Actuarial study conducted in response to provisions of HB 348 necessitated the 0.50% increase in CERS nonhazardous employer contribution rate to provide for a positive rate margin in the retirement system.
DATA SOURCE(S): Actuarial Valuation, Minutes of Board Meeting, letter from actuary.
PREPARER: Bobby J. McKee

*Cost estimate based on estimated annual salaries in June 30, 1985 Actuarial Valuation by William M. Mercer-Meidinger, Inc., Actuarial Consultant.

FINANCE AND ADMINISTRATION CABINET
KENTUCKY RETIREMENT SYSTEMS
(Proposed Amendment)

105 KAR 1:040. Actuarial assumptions and tables.

RELATES TO KRS 16.505 to 16.652, 61.510 to 61.705 [61.692], 78.510 to 78.852
PURSUANT TO: KRS 16.040, 61.645, 61.670, 78.780

NECESSITY AND FUNCTION: KRS 16.645(3), 61.670 and 78.545(23) requires the Board to adopt actuarial tables for the administration of the County Employees Retirement System (CERS), Kentucky Employees Retirement System (KERS) and State Police Retirement System (SPRS) and for the annual determination of assets and liabilities of the systems. This regulation includes the actuarial assumptions adopted by the board and these assumptions establish the basis for all actuarial tables used in the administration of the three (3) retirement systems.

Section 1. The following actuarial assumptions are adopted by the Board of Trustees of the Kentucky Retirement Systems as required under KRS 61.670 and shall be used to determine actuarial tables as are necessary for the administration of the Kentucky Employees Retirement System as provide by KRS 61.510 to 61.705 [61.692], the County Employees Retirement System under KRS 78.510 to 78.852 and the State Police Retirement System under KRS 16.505 to 16.652. These assumptions shall also be used for the annual actuarial valuation for determination of assets and liabilities of these retirement systems.

(1) Kentucky Employees Retirement System and County Employees Retirement System non-hazardous position members actuarial assumptions:

Interest: Eight (8) [Seven and one-half (7 1/2)] percent.

Valuation of Investments: Book value.

Mortality: Pre-retirement - 1971 Group Annuity Mortality Table. Post-retirement - same as pre-retirement. Mortality for members receiving disability allowances - Social Security Administration Disability Mortality Rates - Actuarial Study No. 75.

Turnover: Select and Ultimate Table as follows:

Age	Years of Service	Terminations per 1,000
All ages	0 to 1	250 [350]
All ages	1 to 2	80 [100]
All ages	2 to 3	60 [80]
All ages	3 to 4	50 [65]
All ages	4 to 5	50

5 OR MORE YEARS OF SERVICE

Age	Terminations per 1,000	Age	Terminations per 1,000
[20]	[60]	40	37.5 [50]
[21]	[60]	41	37.5 [49]
[22]	[60]	42	37.5 [48]
[23]	[60]	43	37.5 [47]
[24]	[60]	44	37.5 [46]
25	45 [60]	45	33.8 [45]
26	45 [60]	46	33.8 [44]
27	45 [60]	47	33.8 [43]
28	45 [60]	48	33.8 [42]
29	45 [60]	49	33.8 [42]
30	45 [60]	50	30 [40]
31	45 [60]	51	30 [38]
32	45 [60]	52	30 [36]
33	45 [60]	53	30 [34]
34	45 [60]	54	30 [32]
35	45 [60]	55	22.5 [30]
36	45 [58]	56	22.5 [25]
37	45 [56]	57	22.5 [20]
38	45 [54]	58	22.5 [15]
39	45 [52]	59	22.5 [10]
		60	3.8 [5]
		61 and over	0

Disability: Annual rates varying by age as follows:

KERS & CERS & SPRS
(Non-Duty & Duty)

Age	Rate	Age	Rate
[20]	[0.00025]	45	0.00138 [0.00173]
[21]	[0.00025]	46	0.00138 [0.00194]
[22]	[0.00025]	47	0.00138 [0.00215]
[23]	[0.00026]	48	0.00138 [0.00261]
[24]	[0.00027]	49	0.00138 [0.00307]
25	0.00022 [0.00028]	50	0.00282 [0.00353]
26	0.00022 [0.00029]	51	0.00282 [0.00399]
27	0.00022 [0.00030]	52	0.00282 [0.00445]
28	0.00022 [0.00031]	53	0.00282 [0.00517]
29	0.00022 [0.00032]	54	0.00282 [0.00589]
30	0.00026 [0.00033]	55	0.00529 [0.00661]
31	0.00026 [0.00034]	56	0.00529 [0.00733]
32	0.00026 [0.00035]	57	0.00529 [0.00805]
33	0.00026 [0.00039]	58	0.00529 [0.00924]
34	0.00026 [0.00043]	59	0.00529 [0.01043]
35	0.00038 [0.00047]	60	0.00930 [0.01162]
36	0.00038 [0.00051]	61	0.00930 [0.01281]
37	0.00038 [0.00055]	62	0.00930 [0.01400]
38	0.00038 [0.00066]	63	0.00930 [0.01519]
39	0.00038 [0.00077]	64	0.00930 [0.01638]
40	0.00070 [0.00088]	65	0.00000
41	0.00070 [0.00099]		
42	0.00070 [0.00110]		
43	0.00070 [0.00131]		
44	0.00070 [0.00152]		

Retirement Rates: Early Retirement - At age 55-64 [55-65], 20% [25%] are assumed to retire as soon as eligible for unreduced benefits. For

other retirement rates, see table below.

Retirement Rates

Age	Retirement Rate
55-57	.03
[55-61]	[.05]
58-59	.04
60-61	.05
62	.25
63-64	.10 [.20]
65	.50 [.70]
66-67	.20 [.35]
68	.25 [.45]
69	.40 [.60]
70 & over	1.00

Salary Increase: 7 1/2% annually.

(2) State Police Retirement System, Kentucky Employees Retirement System and County Employees Retirement System hazardous members actuarial assumptions:

Interest: Eight (8) [Seven and one-half (7 1/2)] percent.

Valuation of Investments: Book value.

Mortality: Pre-retirement - 1971 Group Annuity Mortality Table, plus a duty death rate of 5 deaths per 10,000 employees per year. Post-retirement - 1971 Group Annuity Mortality Table. Mortality of members receiving disability allowances - Social Security Administration Mortality Rates - Actuarial Study No. 75.

Turnover: Annual rates varying by age as follows:

Age	Rate	Age	Rate
[20]	[0.0405]	40	0.0150 [0.0200]
[21]	[0.0405]	41	0.0150 [0.0180]
[22]	[0.0405]	42	0.0150 [0.0160]
[23]	[0.0405]	43	0.0150 [0.0140]
[24]	[0.0405]	44	0.0150 [0.0120]
25	0.0304 [0.0405]	45	0.0075 [0.0100]
26	0.0304 [0.0414]	46	0.0075 [0.0080]
27	0.0304 [0.0423]	47	0.0075 [0.0060]
28	0.0304 [0.0432]	48	0.0075 [0.0040]
29	0.0304 [0.0441]	49	0.0075 [0.0020]
30	0.0338 [0.0450]	50	0.0000
31	0.0338 [0.0425]	51	0.0000
32	0.0338 [0.0400]	52	0.0000
33	0.0338 [0.0375]	53	0.0000
34	0.0338 [0.0350]	54	0.0000
35	0.0244 [0.0325]	55	0.0000
36	0.0244 [0.0300]		
37	0.0244 [0.0275]		
38	0.0244 [0.0250]		
39	0.0244 [0.0225]		

Disability: Annual rates varying by age as follows: [Same as KERS-CERS non-hazardous.]

Age	Rate
25	0.00028
30	0.00033
35	0.00047
40	0.00088
45	0.00173
50	0.00353
55	0.00661
60	0.01162

Retirement Rates: SPRS - Assumed 40% [50%] will retire upon completion of twenty (20) [twenty-five (25)] years of service; all others will retire upon completion of twenty (20) [twenty-five (25)] years of service and attainment of age 50, or upon attainment of age 55. CERS Hazardous - Assumed that 50% will retire as soon as eligible for unreduced benefits and balance will continue to age 55; Normal Retirement as soon as eligible. KERS Hazardous - Assumed 40% [50%] will retire as soon as eligible for unreduced benefits and balance would continue until age 60.

Salary Increase: 7 1/2% annually.

*The actuarial assumptions for salary increases are based on analysis of retirement system accounts for the period ended June 30, 1985 [1981] and are not to be construed as a policy of the Commonwealth of Kentucky or local government as to the rate of salary increases an employee may expect to receive.

BOBBY J. McKEE, General Manager
JOHN D. ROBEY, Chairman

APPROVED BY AGENCY: May 20, 1986

FILED WITH LRC: May 30, 1986 at 3 p.m.

PUBLIC HEARING SCHEDULED: A public hearing is scheduled for 3 p.m. on Monday, July 21, 1986, for persons interested in the subject matter of this proposed regulation. The hearing will be held at the Kentucky Retirement Systems office at 1260 Louisville Road in Frankfort, Kentucky. Submit comments or questions to Bobby J. McKee, General Manager, Kentucky Retirement Systems, 1260 Louisville Road, Frankfort, Kentucky 40601.

REGULATORY IMPACT ANALYSIS

Agency Contact Person: Bobby J. McKee

(1) Type and number of entities affected: None

(a) Direct and indirect costs or savings to those affected:

1. First year:

2. Continuing costs or savings:

3. Additional factors increasing or decreasing costs (note any effects upon competition):

(b) Reporting and paperwork requirements: None

(2) Effects on the promulgating administrative body: Brings actuarial assumptions in line with 5-year experience study.

(a) Direct and indirect costs or savings: None

1. First year:
2. Continuing costs or savings:
3. Additional factors increasing or decreasing costs:
(b) Reporting and paperwork requirements: None
(3) Assessment of anticipated effect on state and local revenues: None
(4) Assessment of alternative methods; reasons why alternatives were rejected: Board authorized to adopt actuarial assumptions by statute.
(5) Identify any statute, administrative regulation or government policy which may be in conflict, overlapping, or duplication: None
(a) Necessity of proposed regulation if in conflict:
(b) If in conflict, was effort made to harmonize the proposed administrative regulation with conflicting provisions:
(6) Any additional information or comments: Also repeals KAR 1:080, 1:090 and 1:100 which have been included in the statutes by SB 158, 1986 General Assembly.

Tiering:
Was tiering applied? No. N/A

GENERAL GOVERNMENT CABINET
Board of Licensure for
Nursing Home Administrators
(Proposed Amendment)

201 KAR 6:010. Licensure.

RELATES TO: KRS Chapter 216A
PURSUANT TO: KRS Chapter 216A
NECESSITY AND FUNCTION: KRS Chapter 216A authorizes the Kentucky Board of Licensure for Nursing Home Administrators to regulate the practice of nursing home administration in Kentucky, including the adoption of standards for licensure. The purpose of this regulation is to establish uniform requirements for the licensing of nursing home administrators.

Section 1. Requirements for Issuance of License. An applicant for a license as a nursing home administrator shall in addition to meeting the requirements provided by KRS 216A.080:
(1) Establish a bona fide residency or express an intent to reside in Kentucky, unless employed by a health care facility located in Kentucky.
(2) Have satisfactorily completed a course of study for, and have been awarded a baccalaureate degree <u>from an accredited college or university</u>; and have six (6) months of continuous management experience in a health care facility within three (3) years from the date of application. Said management experience shall include at least partial responsibility for personnel management, budget preparation and fiscal management, and public relations. [; or]
[(3) Have satisfactorily completed an associate degree program or a minimum of sixty (60) college semester hours with concentration in health services, social services, or business, and one (1) year of continuous management experience in a health care facility within three (3) years from the date of application. Said management experience shall include at least partial responsibility for personnel management, budget preparation and fiscal management and public relations.]
[(4) For purposes of meeting the educational requirements above, appropriate vocational/technical programs will be accepted with the following stipulations:]
[(a) The courses/training be health, business or social services related.]
[(b) Programs requiring appropriate designation such as licensure, registration, certification, etc., will be approved only after the applicant has received that designation by the appropriate credentialing body.]
[(c) Applicants with a one (1) year program must also have at least thirty-two (32) college credit hours, at least half of which must be in general subjects such as English, math, science, psychology, etc.]
[(d) Applicants with a two (2) year program must also have at least sixteen (16) college credit hours in general subjects such as English, math, science, psychology, etc.]
<u>(3)</u> [(5)] Pay a license fee of $100 at the time of application, seventy-five (75) dollars of which shall be refunded in the event the applicant is not subsequently licensed.
[(6) Effective October 1, 1985, the baccalaureate degree referred to in subsection (2) of this section must be related to health, business or social services and beginning October 1, 1985, the provisions of subsections (3) and (4) of this section, and that portion of Section 3(1)(d) of this regulation dealing with subsections (3) and (4) of this section will no longer be applicable.]

Section 2. Examination Subjects. (1) Every applicant for a license as a nursing home administrator shall successfully pass a written examination which shall include, but need not be limited to, the following subjects:
(a) Applicable standards of environmental health and safety;
(b) Local health and safety regulations;
(c) General administration;
(d) Psychology of patient care;
(e) Principles of patient care;
(f) Personal and social care;
(g) Therapeutic and supportive care and services in long-term care;
(h) Departmental organization and management; and
(i) Community interrelationships.
(2) Any applicant who has failed to pass the written examination will not be permitted to take the examination again until three (3) months have elapsed. If the applicant fails to pass the examination after three (3) attempts, no further attempts to pass the examination shall be permitted by the board unless the board finds that exceptional circumstances exist at which time the applicant may be allowed to take the examination.

Section 3. Temporary Permits. (1) The board may issue a temporary permit to an individual to practice the art of nursing home administration when the applicant:
(a) Has made written application to the board on the forms provided;
(b) Is at least twenty-one (21) years of age;
(c) Intends to become employed by a health care facility located in Kentucky;
[(d) Has met the minimum education requirements for licensure contained in Section 1(2), (3), (4), (6) of this regulation and has had at least six (6) months of management

experience in a health care facility within three (3) years preceding the date of application, such experience, including at least partial responsibility for personnel management, budget preparation, and fiscal management and public relations; or]

(d) [(e)] Has been awarded a baccalaureate degree from an accredited college or university;

(e) [(f)] Has furnished the board a letter of recommendation from the facility owner or supervisor where he intends to work, with sufficient information to support the fact that an emergency situation exists; and

(f) [(g)] Has paid the temporary permit fee of fifty (50) dollars.

(2) Temporary permits shall be issued in the name of the applicant to be employed at a specific facility for a period of six (6) months.

(3) A refund of twenty-five (25) dollars may be made to the holder of a temporary permit, in the event such permittee receives a nursing home administrators license issued during the first ninety (90) days of the permit period.

(4) A temporary permit may not be extended or renewed beyond the initial period of six (6) months and may not be transferred from one (1) facility to another nor from one (1) individual to another.

Section 4. Renewal, Expiration and Reinstatement of Licenses. (1) All licenses shall be renewed every two (2) years from date of issue or from date of last renewal. It is the responsibility of the licensee, prior to such date of renewal to have:

(a) Made written application for renewal on the prescribed forms;

(b) Paid a biennial renewal fee of $100;

(c) Submitted evidence, satisfactory to the board, of attendance or completion of a continuing education program of study approved by the board which contained either a minimum of four (4) college semester hours in courses directly related to buiness administration, economics, marketing, computer science, social services, psychology, and health profession related programs such as nursing, premedicine, etc., or fifty (50) clock hours, all of which must have been achieved during the immediate preceding biennial period. Any clock hours obtained during the last thirty (30) days of any renewal period, in excess of the number of hours required for renewal purposes, may be credited toward the new renewal period during the renewal process.

(2) The board may make exceptions, grant waivers or provide extensions to the requirements in subsection (1) above when extenuating circumstances are sufficiently evidenced by the licensee to warrant such action.

(3) Expired licenses may be reinstated within a period of sixty (60) days from date of expiration, provided all conditions are met. Failure on the part of the licensee to pay the biennial licensure fee and show evidence of completing the required continuing education credits during the sixty (60) day grace period shall automatically cause such license to terminate. Thereafter, a candidate for relicensure shall make application to the board and meet current licensure requirements.

Section 5. Endorsement. The board may license by endorsement, without examination, a nursing home administrator currently licensed by examination by the proper authorities of any other state upon payment of a fee of $100, and provided the applicant demonstrates to the board:

(1) That he is familiar with state and local health and safety regulations relating to nursing homes;

(2) That his license has not been revoked or suspended in any other state; and

(3) That he meets current educational and experience requirements contained in Section 1 of this regulation.

Section 6. Refusal, Suspension, and Revocation of Licenses. The board may suspend, revoke, or refuse to issue or renew a license of a nursing home administrator, or may reprimand or otherwise discipline a licensee after due notice and an opportunity to be heard at a formal hearing, upon substantial evidence that such applicant or licensee:

(1) Has violated any of the provisions of the law pertaining to the licensing of nursing home administrators or the rules and regulations of the board pertaining thereto;

(2) Has willfully or repeatedly violated any of the provisions of the law, code, rules, or regulations of the licensing or supervising authority or agency of the state or political subdivision thereof having jurisdiction of the operation and licensing of nursing homes;

(3) Has been convicted of a felony involving moral turpitude;

(4) Has practiced fraud, deceit, or misrepresentation in securing or procuring a nursing home administrator license;

(5) Is incompetent to engage in the practice of nursing home administration or to act as a nursing home administrator;

(6) Has practiced fraud, deceit, or misrepresentation in his capacity as a nursing home administrator;

(7) Has committed acts of misconduct in the operation of a nursing home under his jurisdiction;

(8) Is addicted or dependent upon the use of alcohol, controlled substances or other drugs; or

(9) Has wrongfully transferred or surrendered possession, either temporarily or permanently, his license to any other person.

Section 7. Complaints and Hearing Procedures. Any person, public officer, or association, or the board may prefer charges against any licensee:

(1) Such charges shall be in writing and shall be submitted to the board.

(2) The board, or any person or persons appointed by it for the said purpose, may hold a preliminary hearing to determine whether a formal hearing on the charges is necessary.

(3) The board may dismiss the charges and take no action thereon, by formal hearing or otherwise, in which event the charges and the order dismissing the charges shall be filed with the board.

(4) If the board decides that the charges shall be heard formally, the board may hear the charges or designate a hearing officer to hear the charges and set a time and place for a hearing.

(5) A copy of the charges, together with notice of the time and place of the hearing, shall be served on the accused at least thirty

(30) days before the date fixed for the hearing.
(6) Upon the conclusion of the hearing, the board may revoke the license of the accused, or suspend such license for a fixed period, or reprimand, or take other disciplinary action, or dismiss the charges.
(7) An order of suspension made by the board may contain such provisions as to reinstatement of the license as the board shall direct.

Section 8. Conduct of Hearing. At any hearing conducted pursuant to this regulation, any party to the proceedings may appear personnally and with counsel and shall be given the opportunity to introduce evidence and witnesses and to cross-examine witnesses:
(1) At any formal hearing conducted pursuant to this regulation, if a party shall appear without counsel, the board or person designated as a hearing officer shall advise such party of his right to be represented by counsel; and that if he desires to proceed without counsel that he may call witnesses, cross-examine witnesses, and introduce evidence in his behalf.
(2) Appearances shall be noted on the official record of hearing.
(3) The board or designated hearing officer may grant adjournments upon request of any party to the proceedings, provided that an adjournment shall not be for an indefinite period of time, but shall be set down for a day certain.
(4) If an adjournment is requested in advance of the hearing date, such request shall be submitted in writing and shall specify the reason for such request.
(5) In considering an application for adjournment of a hearing the board or hearing officer shall consider whether the purpose of the hearing will be affected or defeated by the granting of such adjournment.
(6) The board or designated hearing officer shall issue subpoenas and subpoena duces tecum upon request of any party to the proceedings of any hearing set down by the board.
(7) The board or hearing officer shall not be bound by the strict rules of evidence in the conduct of a hearing, but the determination and recommendations of the hearing officer shall be founded upon sufficient legal evidence to sustain them.
(8) Upon the conclusion of a hearing the board shall take such action upon such written findings and determinations as it deems proper.

Section 9. Display of Licenses. Every person licensed as a nursing home administrator shall display such license and certificate of biennial registration in a conspicuous place in the office or place of business or employment of such licensee.

Section 10. Duplicate Licenses. The board may issue a duplicate license upon payment of a fee of ten (10) dollars.

Section 11. Inactive Licensure Status. (1) A licensed nursing home administrator in good standing may be placed on inactive status upon request to the board and payment of a biennial fee of twenty (20) dollars, which is not refundable.
(2) Licensees on inactive status shall be subject to the same renewal provisions as those on active status, except that no continuing education credits are required during the inactive period.
(3) A licensee on inactive status may revert to active status by:
(a) Making written application to the board;
(b) Payment of a biennial licensure fee of $100;
(c) Successfully passing an examination administered by the board.
(4) The effective date of the return to active status will be the date board approval is granted and will establish a new anniversary date for renewal purposes only, and the original licensure date remains unchanged.

ROBERT ELLIOTT, Chairman
APPROVED BY AGENCY: May 13, 1986
FILED WITH LRC: June 11, 1986 at 3 p.m.
PUBLIC HEARING SCHEDULED: A hearing has been scheduled on July 23, 1986 at the offices of the Board of Licensure for Nursing Home Administrators, Berry Hill Annex, Frankfort, Kentucky 40601. Anyone interested in attending this hearing should notify Ms. Debbie Gordon in writing at the above address at least five days before the hearing.

REGULATORY IMPACT ANALYSIS

Agency Contact Person: Debbie Gordon
(1) Type and number of entities affected: None/N/A
(a) Direct and indirect costs or savings to those affected:
1. First year:
2. Continuing costs or savings:
3. Additional factors increasing or decreasing costs (note any effects upon competition):
(b) Reporting and paperwork requirements:
(2) Effects on the promulgating administrative body: None/N/A
(a) Direct and indirect costs or savings:
1. First year:
2. Continuing costs or savings:
3. Additional factors increasing or decreasing costs:
(b) Reporting and paperwork requirements:
(3) Assessment of anticipated effect on state and local revenues: None/N/A
(4) Assessment of alternative methods; reasons why alternatives were rejected: None/N/A
(5) Identify any statute, administrative regulation or government policy which may be in conflict, overlapping, or duplication: None/N/A
(a) Necessity of proposed regulation if in conflict:
(b) If in conflict, was effort made to harmonize the proposed administrative regulation with conflicting provisions:
(6) Any additional information or comments: None

Tiering:
Was tiering applied? No. N/A.

NATURAL RESOURCES AND ENVIRONMENTAL PROTECTION CABINET
Department for Environmental Protection
Division of Water
(Proposed Amendment)

401 KAR 5:090. Control of water pollution from oil and gas facilities.

RELATES TO: KRS Chapters 151, 224
PURSUANT TO: KRS 151.125, 224.033, 224.060
NECESSITY AND FUNCTION: KRS 224.033 requires that the cabinet promulgate regulations pertaining to the issuance of permits and the prevention, abatement and control of water pollution. This regulation provides for preventing, abating, and controlling water pollution from oil and gas facilities.

Section 1. Applicability. (1) The provisions of this regulation shall apply to the owner or operator of any facility which causes or is capable of causing produced water.
(2) Owners or operators of dry gas wells as defined in Section 2(8) of this regulation shall be exempt from the requirements of this regulation except under Sections 4, 5(2)(b), and 8(3) of this regulation.

Section 2. Definitions. The following definitions describe terms used in this regulation. Terms not defined below shall have the meaning given to them by KRS Chapters 151 and 224 or the meaning attributed by common use.
(1) "Area of review" means a fixed radius around the facility of not less than one-fourth (1/4) mile.
(2) "Barrel" means forty-two (42) U.S. gallons.
(3) "Cabinet" means the Natural Resources and Environmental Protection Cabinet.
(4) "Director" means the secretary of the cabinet or an authorized representative. For purposes of permit issuance decisions, the director is the Director of the Division of Water.
(5) "Disposal well" means a borehole drilled or proposed to be drilled, or a well converted to be used, for the sole purpose of disposing of any water, gas, produced water or other fluid by injection or other method into a subsurface zone.
(6) "Division" means Division of Water, Natural Resources and Environmental Protection Cabinet.
(7) "Drilling pit" means an earthen excavation for the collection of fluids associated with the drilling, construction, completion, acidizing, or fracturing of an oil or gas well.
(8) "Dry gas well" means a gas well producing one (1) barrel or less of produced water at maximum production conditions during a given twenty-four (24) hour period.
(9) "Enhanced recovery well" means a well used for the injection of fluids to improve or maintain reservoir productivity.
(10) "Facility" means any well, tank, pit, structure, appurtenance or improvement used in the exploration, drilling, or production of oil or gas or used for treating, storing or disposing of produced water.
(11) "Gas" means all natural gas, including casinghead gas, and all other hydrocarbons not defined herein as oil.
(12) "Geologically isolated" means a zone separated from drinking water aquifers and free of known open faults or fractures and free of any unprotected wells within the area of review.
(13) "Holding pit" means an earthen excavated depression designed to receive and store produced water at a facility.
(14) "Kentucky Pollutant Discharge Elimination System (KPDES)" means the Kentucky program for issuing, modifying, revoking and reissuing, terminating, monitoring and enforcing permits to discharge and imposing and enforcing pretreatment requirements. The KPDES regulations are 401 KAR 5:050 to 5:085.
(15) "Oil" means natural crude oil or petroleum and other hydrocarbons, regardless of specific gravity, which are produced at the well in liquid form and which are not the result of condensation of gas after it leaves the underground reservoir.
(16) "Operate" means any act relating to the construction, operation or maintenance of any facility.
(17) "Operator" means any person who operates any facility.
(18) "Owner" means any person who possesses any interest in:
(a) The right to develop, operate, or produce oil or gas; or
(b) Any facility.
(19) "Person" means as defined in KRS 224.005(12).
(20) "Pollutant" means as defined in KRS 224.005(28).
(21) "Produced water" means any and all water and pollutants and combination thereof resulting, obtained or produced from the exploration, drilling, or production of oil or gas.
(22) "Register" means to file forms with the division which contain information as to oil and gas well geographic location, production, produced water production, methods used for treating, storing or disposing of produced water, and other information deemed necessary by the division.
(23) "Stripper well" means any oil well producing ten (10) barrels or less per day of oil.
(24) "Tank battery" means an installation where oil is collected from wellheads and separated from produced water.
(25) "Total dissolved solids" means the total dissolved (filtrable) solids as determined by use of the method specified in 40 CFR Part 136.
(26) "Treatment lagoon" or "effluent lagoon," as used in 401 KAR 5:029, Section 1(1)(bb) and as applied to facilities subject to this regulation, means a secondary recovery or waterflood impoundment existing on April 8, 1985, owned or operated by a person eligible to receive a KPDES permit for a discharge from that impoundment, if used for the purpose of diluting produced water, and if the owner or operator has received prior approval from the cabinet of its request for designation as such.
(27) [(26)] "Waters of the Commonwealth" means waters of the Commonwealth as defined in KRS 224.005(26).
(28) [(27)] "Well" means a borehole drilled, or proposed to be drilled for the purpose of producing gas or oil or one through which gas or oil is being produced, or a borehole drilled or proposed to be drilled for the purpose of injecting any water, gas, produced water or other fluid therein or one into which any water,

gas, produced water or other fluid is being injected.

(29) [(28)] "Zone" means a subsurface layer or stratum capable of producing or receiving fluids.

Section 3. Prohibition. No person shall construct, modify, or operate a facility in violation of state or federal water quality standards or other applicable standards in this regulation.

Section 4. Registration. (1) All operators shall register their facilities with the division using a form approved by the director containing name of operation, location of lease, oil and produced water production rates, method of produced water disposal, and other necessary information. The operator shall register each tank battery with associated wells, pits, and other similar structures as one (1) facility. Those facilities not associated with a tank battery shall be registered individually.

(2) Operators who previously registered their facilities with the division on the form entitled "Division of Water, Crude Oil Producers Brine Disposal Registration Form" shall not be required to register under this section unless there has been a change in operators or in the reported quantity of produced water, or a modification to the facility has occurred which affects the operations used for treating, storing or disposing of produced water.

(3) Operators shall post waterproof signs, at each facility, of a size and type approved by the director. The signs shall identify the operator's name, address, permit and registration number, phone number, and other information required by the director.

(4) New facilities are required to register with the division within sixty (60) days after the facility begins producing oil and/or gas.

(5) Dry gas wells are exempted from the registration requirements of this section. [Existing dry gas wells are required to register with the division by June 1, 1985.]

Section 5. Produced Water Disposal. Produced water shall be disposed into an enhanced recovery well, a disposal well permitted under Section 11(3) of this regulation, a well permitted under the 40 CFR 146 underground injection control program, by a surface discharge permitted under Section 8 of this regulation, by evaporation, by reverse osmosis, or by any other method first approved by the cabinet, provided that no such method approved by the cabinet will violate water quality standards. A KPDES permit is not required for a point source discharge meeting the exclusion of 401 KAR 5:055, Section 1(2)(h). [(1) Produced water shall be disposed of into either an enhanced recovery well, a disposal well permitted under Section 11(3) of this regulation, or a well permitted under 40 CFR 146, the Underground Injection Control Program.]

[(2) If either of the following conditions apply to a facility, surface discharges of produced water will be allowed, but are subject to the requirements of Section 8 of this regulation. It is the obligation of the applicant to demonstrate to the director, with appropriate supporting data, that one (1) of the following applies:]

[(a) The cost of constructing and operating a disposal well system to meet the requirements of Section 11(4) of this regulation or the legal or actual inability to use a non-owned disposal well would necessitate a shutdown of operations at that particular facility; or]

[(b) Less than one (1) barrel per twenty-four (24) hour period of produced water is generated, except for those facilities included in Subpart C - Onshore Subcategory of 40 CFR 435.]

Section 6. Disposal of Produced Water Off the Facility. (1) No person shall transport produced water away from a tank battery to any location other than a cabinet-permitted disposal system or an individual Underground Injection Control (UIC) permitted site, or a disposal system in another state.

(2) No operator shall authorize or allow the transportation of produced water away from a facility where it is produced unless such operator has first submitted the following information to the director and obtained approval:

(a) Operator's name, mailing address, and telephone number.

(b) Transporter's name, mailing addres, telephone number.

(c) Name of disposer, mailing address, telephone number, disposal site, and permit number.

(d) Vehicle identification information, including license number and vehicle description.

(e) Quantity of produced water to be transported.

(3) The operator of a disposal well may receive produced water from other facilities in accordance with the notification procedures of subsection (2) of this section.

(4) Spills during transfer of produced water shall be reported in accordance with 401 KAR 5:015.

Section 7. Approval Requirements for Continuation of Existing Facilities. (1) Applicability. The provisions of this section shall apply to operators of facilities in existence prior to the effective date of this regulation.

(2) Continuation requirements. Operators may continue to operate existing facilities for a period not to exceed one (1) year from the date of the submittal of a compliance plan provided all the following provisions are met:

(a) A written request to continue operating existing facilities is submitted to the director. This request shall include a detailed description of existing operations for treating, storing or disposing of produced water.

(b) A plan is submitted to the director which proposes a schedule and outlines the procedures for meeting the requirements of this and other applicable regulations.

(c) Both the written request and plan shall be submitted to the director by June 1, 1984.

(d) Approval for continuation of operation of existing facilities has been obtained from the director pursuant to subsection (3) of this section and the operator has on display at the facility the division's approval identification number.

(3) Approval procedures. After receiving the written request and plan specified in subsection (2) of this section, the director will:

(a) Review the plan and request any additional

information from the operator, if needed, within twenty (20) working days of receipt of the plan;

(b) Develop a compliance schedule for each facility or contiguous facility operation; and

(c) Issue a written approval to the operator containing the compliance schedule and an identification number within forty (40) working days after the plan is deemed complete.

(4) Nothing in this section shall be construed to authorize any discharge from any facility except pursuant to Section 8 of this regulation.

Section 8. Surface Discharges of Produced Water. (1) The provisions of 401 KAR 5:026, 5:029, 5:031, and 5:050 through 5:085, inclusive, shall apply according to their terms to the owner or operator of any facility which causes or is capable of causing produced water. The provisions of this section apply to the operator of any facility discharging produced water into surface water of the Commonwealth. Where there is a specific conflict between a provision of this section and the provisions of 401 KAR 5:026, 5:029, 5:031, or 5:050 through 5:085, inclusive, this section shall control.

(2) A KPDES permit, issued pursuant to 401 KAR 5:050 through 5:085, inclusive, is required prior to beginning a discharge of pollutants into waters of the Commonwealth. A KPDES permit will include effluent limitations developed pursuant to 401 KAR 5:065, Sections 2 and 4. A permit may contain a zero discharge condition or may be denied, where authorized by the KPDES regulation.

(3) For purposes of setting KPDES permit limitations, the chloride criterion of 600 mg/l, set forth in 401 KAR 5:031, Section 4, Table I, shall be utilized as a thirty (30) day average.

(4) An owner or operator applying for a KPDES permit may request an exception to the water quality criteria of 401 KAR 5:031. Applications for the exception shall be processed by the cabinet as a part of the KPDES application, if the applicant applies for both at the same time. For exception to water quality criteria applications which are received by the cabinet at other times, the review procedure of 401 KAR 5:075 applies. A public hearing, after public notice, shall be conducted prior to granting any exception to criteria request.

(5) A KPDES applicant may combine outfalls on one (1) application, if all outfalls are owned or operated by the applicant, and if the outfalls discharge to a common watershed and are similar in effluent quality and environmental impact. If the cabinet disapproves the combination the applicant may seek review of that decision pursuant to KRS 224.081(2).

(6) Notwithstanding 401 KAR 5:085, Section 4, applicants shall pay a base KPDES application fee of $350. An additional fee may be assessed by the cabinet for combined outfalls, if the time required to process the application exceeds that necessary for processing a single-outfall application. Exceptions to criteria applications submitted pursuant to subsection (4) of this section shall pay a water quality variance fee pursuant to 401 KAR 5:085, Section 6.

[Applicability. The provisions of this section apply to operators of facilities discharging produced water into surface waters of the Commonwealth.]

[(2) General requirements. No produced water shall be discharged from a facility unless one of the requirements of Section 5(2) of this regulation is met and such discharge is authorized by and in accordance with the KPDES regulations 401 KAR 5:050 through 401 KAR 5:085. A KPDES permit is not required for the discharge of produced water through a permitted disposal well. KPDES permits may be issued to operators of facilities provided the facility meets the criteria for inclusion within Subpart F - Stripper Subcategory of 40 CFR Part 435.]

[(3) Any operator of oil and gas facilities who files a compliance plan indicating an intent to discharge produced water under a KPDES permit shall submit, with the KPDES application, information regarding the technological, economic and geologic factors which limit the operator's capability to inject the produced water.]

[(4) No KPDES permit shall be issued to the operator of an oil and gas facility that would be a new source or new discharger if the discharge from its construction or operation would cause or contribute to a violation of water quality standards.]

Section 9. Holding Pits. (1) Applicability. The provisions of this section apply to the operators of holding pits which are constructed after the effective date of this regulation, and to the operators of existing pits that are incapable of demonstrating pursuant to Section 7 of this regulation that those pits do not contaminate surface or groundwaters.

(2) Exemption. Spill Prevention Control and Countermeasure (SPCC) pits developed pursuant to Section 13 of this regulation are exempted from the requirements of this section.

(3) General requirements. Operators of holding pits shall supplement the registration form required under Section 4 of this regulation with information regarding the construction and operation of any holding pit and any other information deemed necessary by the director. This information shall be submitted to the director on forms provided by the director not less than thirty (30) days prior to the date the permit is desired.

(4) Permits. The director will issue permits to operators of holding pits to contain any condition necessary to satisfy any requirement of this regulation notwithstanding any less stringent provision of the law to the contrary.

(5) Conditions applicable to holding pits.

(a) Construction requirements.

1. Holding pits shall be constructed in accordance with KRS Chapter 151 and Division of Waste Management regulation 401 KAR 30:030.

2. Holding pits shall be constructed with an impermeable synthetic liner having a minimum thickness of twenty (20) mils.

3. Holding pits shall be designed with a continuous bermed area at least two (2) feet above ground level.

(b) Operating requirements.

1. No holding pit shall discharge produced water into waters of the Commonwealth except in accordance with a KPDES permit, nor shall any holding pit be used for the ultimate disposal of produced waters.

2. All surface water shall be diverted away from the holding pit so that the holding pit shall have no additional drainage area.

3. Waste shall be removed from the holding pit

to maintain a one (1) foot minimum feeboard. Disposal of wastes shall be in accordance with Kentucky laws and regulations.

(c) Closure requirements.

1. Except as provided in subsection (2) of this section, any holding pit no longer used for the purpose for which it was intended shall be backfilled, graded, and revegetated. The vegetative cover shall be capable of stablizing the soil surface from erosion. This closure shall be conducted within the time period specified in the permit issued pursuant to subsection (3) of this section.

2. A holding pit may remain as a permanent structure or be used for other purposes upon written approval from the director.

3. Disposal of all wastes shall be in accordance with Kentucky laws and regulations.

(6) A tank, of a size and type approved by the director, may be used in lieu of a holding pit.

Section 10. Drilling Pits. Facilities shall be constructed for the collection of fluids, other than produced water, associated with well construction, acidizing and chemically enhanced recovery in areas where waters of the Commonwealth may be affected. If the life of the facilities is longer than thirty (30) days following completion of exploration or drilling activities they shall meet all requirements of Section 9 of this regulation. Upon written request, the director may, with good cause, extend the allowable life of the facility to a maximum ninety (90) days if the extension will not cause or contribute to contamination of waters of the Commonwealth. The closure requirements for these facilities shall be as specified in Section 9(5)(c) of this regulation.

Section 11. Disposal Wells. (1) Applicability. The provisions of this section apply to operators of disposal wells until issuance of an individual Underground Injection Control (UIC) permit by the agency having jurisdiction under the Safe Drinking Water Act (42 U.S.C. Section 300f, et seq.).

(2) General requirements. Operators of disposal wells shall supplement the registration form required under Section 4 of this regulation with information regarding the construction and operation of any disposal well, a plan showing the location of all existing and abandoned wells within the area of review and any other information deemed necessary by the director. This information shall be submitted to the director on forms provided by the division not less than thirty (30) days prior to the date the permit is desired.

(3) Permits. The director will issue permits to operators of disposal wells to contain any condition necessary to satisfy any requirement of this regulation notwithstanding any less stringent provision of law to the contrary.

(4) Conditions applicable to all disposal wells. Disposal wells shall reinject all produced waters into a formation which is geologically isolated and contains more than 10,000 mg/l of total dissolved solids or meets the criteria of an exempted aquifer as set forth in 40 CFR 146.4. If a formation is unacceptable for injection solely because abandoned and improperly plugged boreholes have established communication between it and other strata, the operator is obligated to find and properly plug these boreholes within the area of review established by the division. Disposal well failure or shutdown shall be reported immediately to the director. All plugging, casing, and operation of wells shall be done in accordance with Department of Mines and Minerals regulations 805 KAR 1:020, 1:060, and 1:070.

Section 12. Inspection and Enforcement. The cabinet may inspect any facility pursuant to KRS 224.033 and shall provide written notification of any violation to the operator. Following the determination of any violation of any applicable provision of law, the cabinet may initiate any enforcement action including an order to abate and alleviate such condition or activity pursuant to KRS 224.071 and any other applicable remedy including civil penalties pursuant to KRS 224.994.

Section 13. Spills and Leaks. (1) General provision. Operators of facilities shall develop and implement Spill Prevention Control and Countermeasure (SPCC) Plans when required under 40 CFR Part 112.

(2) Reporting.

(a) Operators shall report to the division all spills and bypasses of oil and produced water from facilities in accordance with 401 KAR 5:015.

(b) Operators shall report all spills, discharges and bypasses of oil from a facility in accordance with the procedures in 40 CFR Part 110.

Section 14. Permit Fees. (1) The provisions of this section shall apply to the operator of each facility required to have a permit by this regulation except for any facility permitted under a general permit.

(a) Every operator who is issued a permit under the provisions of this regulation shall be assessed a permit fee in accordance with the provisions set forth in subsection (2) of this section.

(b) Upon making the determination that a permit can be issued under this regulation, the director will notify upon receipt of the total amount of the permit fee. Failure by the applicant to pay the assessed permit fee on or before the due date may result in the denial of the permit.

(2) The fee for each type of permit is listed below:

Facility and Type of Permit	Permit Fee
Construction of "holding pit"	$100
Operation of existing "disposal well"	$125
Construction of "disposal well"	$200

(3) In addition to the requirements of this regulation, facilities issued KPDES permits will be assessed a fee pursuant to 401 KAR 5:085.

(4) Duplicate permit fee. Upon application for the issuance of a duplicate permit for activities covered under this regulation, the duplicate permit shall be issued by the cabinet upon receipt of a fifteen (15) dollar permit fee.

(5) Terms of payment.

(a) Payment of a permit fee as provided for by this section will be made within thirty (30) days of the billing date.

(b) Certified checks or money orders, if used,

shall be payable to the Kentucky State Treasurer.

CHARLOTTE E. BALDWIN, Secretary
APPROVED BY AGENCY: May 21, 1986
FILED WITH LRC: June 11, 1986 at 10 a.m.
PUBLIC HEARING SCHEDULED: A public hearing will be scheduled for July 24, 1986 at 7 p.m. at the auditorium, Capital Plaza Tower, Frankfort, Kentucky 40601. Anyone wishing to attend the public hearing should contact Donald F. Harker, Jr., Director, Division of Water, 18 Reilly Road, Frankfort, Kentucky 40601 no later than July 19.

REGULATORY IMPACT ANALYSIS

Agency Contact Person: Donald F. Harker, Jr., Director

(1) Type and number of entities affected: The amendment to 401 KAR 5:090 is proposed as a result of the Consent Decree between the Natural Resources and Environmental Protection Cabinet and the Kentucky Oil & Gas Association and other plaintiffs mentioned in civil actions no. 85-CI-172 and no. 85-CI-129. The proposed amendment redefines the terms of eligibility by which oil and natural gas facilities would be permitted to surface discharge their produced water. The proposed amendment also establishes fees for applicants for and recipients of such eligibility. Technical changes also are made by the proposed amendment to Sections 2, 5, and 8. Entities affected are those parties in association with the plaintiffs mentioned in the Consent Decree to civil actions no. 85-CI-172 and no. 85-CI-129.

(a) Direct and indirect costs or savings to those affected:

1. First year: Costs for applicants for an exception to criteria for water quality standards include a $350 base fee for application for a KPDES discharge permit. Applicants would pay $70 of the base fee with the application, and the balance would be due upon issuance of the permit. The cabinet may also assess a fee, where applicable, to successful applicants for combined outfalls into a common watershed. Savings may be realized by facilities, in cases of regulatory hardship faced by producers and communities, in the form of reduced costs (capital and/or operating and maintenance) of treatment of produced water.

2. Continuing costs or savings: Continued savings to those facilities mentioned above may be realized in the form of reduced operating and maintenance costs.

3. Additional factors increasing or decreasing costs (note any effects upon competition): None

(b) Reporting and paperwork requirements: Oil and gas producers seeking an exception to criteria would submit an application to the Natural Resources and Environmental Protection Cabinet. Applicants would be required to provide information on their facilities which would be used to evaluate each applicant's eligibility for a variance. The application form will be provided by the cabinet.

(2) Effects on the promulgating administrative body:

(a) Direct and indirect costs or savings:

1. First year: The collection of a fee for a KPDES permit would partially offset the costs of processing applications for exception to water quality criteria and for a KPDES permit. Collection of a fee for combined outfalls into a common watershed would defray in part the costs of determining individual outfall limits within an affected watershed.

2. Continuing costs or savings: None

3. Additional factors increasing or decreasing costs: None

(b) Reporting and paperwork requirements: The cabinet would process and evaluate applications for both exceptions to water quality criteria and KPDES discharge permits from oil and gas producers.

(3) Assessment of anticipated effect on state and local revenues: Fees will defray application review costs for the state program.

(4) Assessment of alternative methods; reasons why alternatives were rejected: Alternatives to the revision of surface discharge program qualifications for oil and gas producers are (1) no action and (2) appeal of actions no. 85-CI-172 and 85-CI-129. Since the Johnson Circuit Court decision enjoined the cabinet from exercising its permitting authority, the no action alternative could not be followed. The appeal option was ultimately rejected in favor of the proposed amendments due to the perception that resumption of regulation of the oil and gas industries would be delayed much longer by undertaking the appeals process than by negotiating and promulgating the proposed amendments. The proposed technical corrections can only be made by amending the existing regulation.

(5) Identify any statute, administrative regulation or government policy which may be in conflict, overlapping, or duplication: Generally, there is no conflict posed by the amendments. However, the amendments address the potential for conflict with 401 KAR 5:026, 5:029, 5:031, or 5:050 through 5:085.

(a) Necessity of proposed regulation if in conflict: N/A

(b) If in conflict, was effort made to harmonize the proposed administrative regulation with conflicting provisions: In the event of a specific conflict between this regulation and the provisions of 401 KAR 5:026, 5:029, 5:031, or 5:050 through 5:085, the amended Section 8(1) states that the provisions of 401 KAR 5:090 shall control.

(6) Any additional information or comments: None

Tiering:
Was tiering applied? No. No significant difference exists in the processing of applications of oil producers and natural gas producers; therefore, tiering is not necessary.

JUSTICE CABINET
(Proposed Amendment)

500 KAR 1:010. Definitions.

RELATES TO: KRS 61.315
PURSUANT TO: KRS 61.315(4)
NECESSITY AND FUNCTION: This regulation provides the definitions of certain terms used in 500 KAR Chapter 1 which pertain to criteria and procedures applicable to the administration of benefits paid on death of police officers who have died in the line of duty, as required by KRS 61.315(4) to be promulgated by the Justice

Cabinet.

Section 1. Definitions. The following definitions shall apply in this chapter:

(1) "Secretary" means the Secretary of the Justice Cabinet.

(2) "Cabinet" means the Justice Cabinet.

(3) "Police officer" means every full-time police officer, sheriff or deputy sheriff who works not less than forty (40) hours per week, or any auxiliary police officer appointed pursuant to KRS 95.445, [who is] elected to office or employed by any county or city or by the state or by an airport board created pursuant to KRS Chapter 183.

(4) "Full time" means a "police officer" as defined in subsection (3) of this section who is a salaried and duly sworn officer of a statutorily and lawfully organized police department for a city, county, airport board created pursuant to KRS Chapter 183 or Commonwealth of Kentucky or sheriff's office of Kentucky and is working an approved forty (40) hour week or as approved according to a uniform weekly schedule that is standard for police officers employed by the employing county, city, and airport board or state agency or sheriff's office and who is responsible for the prevention and detection of crime and the enforcement generally of the criminal laws and traffic laws of Kentucky for the general public.

(5) "Spouse" means the lawfully wedded husband or wife of the deceased officer living at the time of the officer's death, and includes a spouse living apart from the officer at the time of the officer's death for any reason or a spouse involved in divorce proceedings if a final divorce decree has not been entered.

(6) "Children" means any natural, adopted or posthumous child or child born out of wedlock of the deceased police officer who, at the time of the officer's death is:

[(a)] Living, or later born alive. [; and]

[(b) Under eighteen (18) years of age; or]

[(c) Eighteen (18) years of age or older and incapable of self-support because of physical or mental disability or impairment.]

(7) "Dependent parent" means a living, natural or adoptive parent of the police officer who, at the time of the police officer's death, was regularly dependent for support upon the income of the officer for the parent's support in the nature of food, shelter, clothing, medical expenses and other ordinary and customary items for maintenance of the parent supported for a substantial period of time.

(8) "Death as a direct result of an act" means that the antecedent act, omission to act or event inflicted upon the police officer was the substantial factor in the result of the police officer's death.

(9) "Death" means the immediate death of the police officer from an act in the line of duty that resulted in his death, as well as a traumatic injury, wound, condition of the body or disease resulting therefrom or medical attention therefor that directly causes the death of the officer within one (1) year from an act in the line of duty that resulted in his death.

(10) "Act in the line of duty" means an act or omission to act by the police officer or event involving the police officer or external force upon the police officer while the officer is engaged in any action or duty which the officer is obligated or authorized by rule, regulation, condition of employment or service, or law to perform, and for which the officer is compensated by the public agency or office the police officer serves. Specifically, an act is not in the line of duty if the death was caused by:

(a) A non work-related disease or condition or a routine work-related disease or condition commonly regarded as a concomitant of the officer's occupation;

(b) Intentional misconduct of the police officer;

(c) The police officer's intention to bring about his death;

(d) The police officer's willfulness or wanton disregard to bring about his death;

(e) If voluntary intoxication of the police officer was a contributing cause of death; or

(f) If the actions or omissions of the beneficiary was a substantial factor to the death of the police officer, recovery being precluded as to that beneficiary only.

(11) "Office of the Secretary" as used herein means the person designated by the secretary of the cabinet to receive, process and make eligibility determinations on claims for benefits to be paid on death of a police officer pursuant to KRS 61.315. The address of the Office of the Secretary for filing claims is: Office of the Secretary, Justice Cabinet, Death Benefits Claim Adjustor, Commonwealth Credit Union Building, 417 High Street, 3rd Floor, Frankfort, Kentucky 40601.

(12) "Auxiliary police officer" means a duly and lawfully appointed auxiliary police officer appointed pursuant to KRS 95.445 pursuant to an ordinance by a legislative body of a city of the second, third, fourth, fifth, or sixth class or urban-county government, except a city of the fifth or sixth class in a county containing a first class city.

NORMA C. MILLER, Secretary

APPROVED BY AGENCY: June 11, 1986

FILED WITH LRC: June 13, 1986 at 8 a.m.

PUBLIC HEARING SCHEDULED: A public hearing on this regulation has been scheduled on July 25, 1986, at 1 p.m., in the Library Conference Room, Justice Cabinet, 417 High Street, 3rd Floor, Frankfort, Kentucky. Anyone interested in attending this hearing, shall notify in writing at least five days before the hearing, the following individual: Lucy B. Richardson, Attorney, Justice Cabinet, 417 High Street, 3rd Floor, Frankfort, Kentucky 40601.

REGULATORY IMPACT ANALYSIS

Agency Contact Person: Lucy B. Richardson

(1) Type and number of entities affected: Survivors of police officers or sheriffs who have died in the line of duty are affected.

(a) Direct and indirect costs or savings to those affected:

1. First year:

2. Continuing costs or savings:

3. Additional factors increasing or decreasing costs (note any effects upon competition):

(b) Reporting and paperwork requirements: Minimal cost to the survivor to present paperwork to prove entitlement to death benefits.

(2) Effects on the promulgating administrative

body:
(a) Direct and indirect costs or savings:
1. First year:
2. Continuing costs or savings:
3. Additional factors increasing or decreasing costs:
(b) Reporting and paperwork requirements: These requirements will facilitate prompt and efficient processing of death benefits.
(3) Assessment of anticipated effect on state and local revenues: N/A
(4) Assessment of alternative methods; reasons why alternatives were rejected: N/A
(5) Identify any statute, administrative regulation or government policy which may be in conflict, overlapping, or duplication: None
(a) Necessity of proposed regulation if in conflict:
(b) If in conflict, was effort made to harmonize the proposed administrative regulation with conflicting provisions:
(6) Any additional information or comments:

Tiering:
Was tiering applied? No. The new regulation only applies to one class of persons, i.e., survivors of dead officers.

JUSTICE CABINET
(Proposed Amendment)

500 KAR 1:020. Filing and processing of death benefit claims.

RELATES TO: KRS 61.315
PURSUANT TO: KRS 61.315(4)
NECESSITY AND FUNCTION: This regulation provides criteria and procedures applicable to filing and processing of death benefit claims for the proper administration of benefits legally required to be paid to the proper party or parties on the death of police officers who have died in the line of duty, as required by KRS 61.315(4) to be promulgated by the Justice Cabinet.

Section 1. Submission of Claim by Proper Party. The secretary of the cabinet shall determine who is the proper party or parties to submit a claim for death benefits in accordance with the following requirements:
(1) The claim shall be submitted and executed by the claimant or the claimant's legally designated representative upon submission of written proof of such designation.
(2) If the claimant is under a disability in terms of mental or physical incapacity or as a result of being a minor, then the claim shall be submitted and executed by the claimant's legally appointed guardian, committee, trustee or other legal representative upon submission of written proof of such disability and of the legal authority of representation in the nature of affidavits and certified court records or legal documents.

Section 2. Proof of Relationship. In filing the claim for death benefits the claimant or claimant's representative shall submit the following proof of relationship:
(1) If the claimant is a spouse of the police officer, the spouse shall submit proof of marriage in the form of a duly issued and certified marriage license or certificate, any other certified government or official report or affidavit of the marriage officiate or affidavit of two (2) witnesses of the marriage. Such documentation presented shall establish the names of parties married and the date and place of marriage. if the claimant spouse or officer was previously married, certified divorce decrees of all previous marriages shall be submitted.
(2) If the claimant is a child of the police officer, documentation of the relationship and age shall be provided in the form of certified official vital statistics records, adoption decrees, birth certificates, paternity decree, or other government agency records that reveal the age and relationship of the child with the deceased officer. Affidavits of two (2) disinterested credible witnesses or an affidavit of the officer prior to death may provide proof of the officer's recognition of the child as his natural or adopted child if none of the foregoing documentation is in existence.
(3) If the claimant is a dependant parent, proof of such relationship shall be provided in the form of certified vital statistics records, birth certificates, adoption decree or other official government records revealing the parental relationship. Affidavits of two (2) disinterested, credible witnesses may provide proof of the officer's recognition of the claimant as his parent if the foregoing documentation is not in existence.
(4) If dependency is to be established as in the case of a dependent parent such dependency shall be documented and proven as follows:
(a) A sworn statement of dependency by the dependent parent or the deceased officer, if one was made; and
(b) Financial records or other records that reveal all sources of income and support available for the claimant for the twelve (12) months preceding the officer's death; and
(c) The amount of income and value of support derived from each source listed; and
(d) The nature of support provided by each source; and
(e) Other documents that may be deemed necessary.
(5) If the claimant is claiming through an auxiliary police officer appointed pursuant to KRS 95.445, the claimant shall provide the ordinance establishing the auxiliary police force and sufficient official records revealing whether the officer was appointed by the appropriate officials and whether the appointment was for a third, fourth, fifth or sixth class city or urban-county government, and whether a first class city is within the county wherein the auxiliary police officer was appointed.

Section 3. Proof of Death as a Direct Result of an Act in the Line of Duty. The claimant shall provide proof of death of the police officer as a direct result of an act in the line of duty by providing the following:
(1) A certified copy of the officer's death certificate; and
(2) Certified employment records substantiating the officer's full-time status as required by statute and regulation; and
(3) A certified autopsy report, if requested by the cabinet, or other sworn medical evidence

as to the cause of death, and a coroner's report or other formal investigative report, if made; and

(4) A certified investigative report prepared by the employing police agency or sheriff's office regarding the circumstances leading to the death.

(5) Other documents that may be deemed necessary.

Section 4. Filing the Claim. (1) In order to file a claim for benefits paid on death of a police officer, the claimant shall file completed forms provided by the office of the secretary of the cabinet including the claim for death benefits and report of police officer's death along with the appropriate documentary proof herein provided for.

(2) The claim for death benefits shall be filed within the office of the secretary six (6) months from the date of the death of the police officer for which the claim is made, unless the secretary extends the filing deadline for good cause shown by the claimant.

(3) The office of the secretary may at any time require additional evidence to be submitted with regard to entitlement, the right to receive payment, the amount to be paid, or any other material issue.

(4) Whenever a claimant for benefits herein has submitted no evidence or insufficient evidence of any material issue or fact, the office of the secretary shall inform the claimant what evidence is required for a determination as to such issue or fact and shall request the claimant to submit such evidence within forty-five (45) days from the date of the request of the office of the secretary.

(5) The claimant's failure to submit evidence on a material issue or fact as requested by the office of the secretary shall be a basis for determining that the claimant fails to satisfy the conditions required to award death benefits to the claimant.

(6) After the claim has been filed and the office of the secretary determines the claimant has submitted (or failed to submit) all reports, documents and/or evidence required to be submitted, the office of the secretary shall render a decision on the claim within forty-five (45) days.

(7) A claim for benefits may be withdrawn at any time upon written notice to the secretary signed by the claimant or claimant's representative.

(8) Upon making a finding of eligibility, the office of the secretary shall, in writing, notify the claimant at claimant's last known address of its disposition of the claim. Payment shall be made to the claimant as soon thereafter as practicable, with the Justice Cabinet presenting the claim to the Finance Cabinet within five (5) working days.

(9) In those cases where the office of the secretary has found the claimant ineligible for a death benefit, the office of the secretary shall notify the claimant in writing at claimant's last known address of its disposition and shall set forth findings of fact and conclusions of law supporting the decision, as well as claimant's right to a hearing and review by the secretary.

Section 5. Priority and Amount of Claim Benefits. Upon final determination of eligibility for benefits, the benefits are to be paid in the manner as follows:

(1) $25,000 to the surviving spouse of the police officer who died; <u>or</u>

(2) If the police officer has no surviving spouse, then $25,000 to the surviving children, divided in equal portions according to the number of surviving children; <u>provided, however, if the surviving children are less than eighteen (18) years of age, the state treasurer shall:</u>

<u>(a) Pay $10,000 to the surviving children in equal amounts; and</u>

<u>(b) Hold $15,000 in trust divided into equal accounts at appropriate interest rates for each surviving child until such child reaches the age of eighteen (18) years. If a child dies before reaching the age of eighteen (18) years, his account shall be paid to his estate;</u> or

(3) If the police officer who died has no surviving spouse or surviving children, then $25,000 to the surviving dependent parents of the police officer, divided in equal portions according to the number of surviving dependent parents.

NORMA C. MILLER, Secretary

APPROVED BY AGENCY: June 11, 1986

FILED WITH LRC: June 13, 1986 at 8 a.m.

PUBLIC HEARING SCHEDULED: A public hearing on this regulation has been scheduled on July 25, 1986, at 1 p.m., in the Library Conference Room, Justice Cabinet, 417 High Street, 3rd Floor, Frankfort, Kentucky. Anyone interested in attending this hearing, shall notify in writing at least five days before the hearing, the following individual: Lucy B. Richardson, Attorney, Justice Cabinet, 417 High Street, 3rd Floor, Frankfort, Kentucky 40601.

REGULATORY IMPACT ANALYSIS

Agency Contact Person: Lucy B. Richardson

(1) Type and number of entities affected: Survivors of police officers or sheriffs who have died in the line of duty are affected.

(a) Direct and indirect costs or savings to those affected:

1. First year:

2. Continuing costs or savings:

3. Additional factors increasing or decreasing costs (note any effects upon competition):

(b) Reporting and paperwork requirements: Minimal cost to the survivor to present paperwork to prove entitlement to death benefits.

(2) Effects on the promulgating administrative body:

(a) Direct and indirect costs or savings:

1. First year:

2. Continuing costs or savings:

3. Additional factors increasing or decreasing costs:

(b) Reporting and paperwork requirements: These requirements will facilitate prompt and efficient processing of death benefits.

(3) Assessment of anticipated effect on state and local revenues: N/A

(4) Assessment of alternative methods; reasons why alternatives were rejected: N/A

(5) Identify any statute, administrative regulation or government policy which may be in conflict, overlapping, or duplication: None

(a) Necessity of proposed regulation if in conflict:

(b) If in conflict, was effort made to harmonize the proposed administrative regulation with conflicting provisions:
(6) Any additional information or comments:

Tiering:
Was tiering applied? No. The new regulation only applies to one class of persons, i.e., survivors of dead officers.

CORRECTIONS CABINET
(Proposed Amendment)

501 KAR 6:020. Corrections policies and procedures.

RELATES TO: KRS Chapters 196, 197, 439
PURSUANT TO: KRS 196.035, 197.020, 439.470, 439.590, 439.640
NECESSITY AND FUNCTION: KRS 196.035, 197.020, 439.470, 439.590, and 439.640 authorize the secretary to adopt, amend or rescind regulations necessary and suitable for the proper administration of the cabinet or any division therein. These regulations are in conformity with those provisions.

Section 1. Pursuant to the authority vested in the Corrections Cabinet the following policies and procedures are incorporated by reference on June 13 [May 15], 1986 and hereinafter should be referred to as Corrections Policies and Procedures. Copies of the procedures may be obtained from the Office of the General Counsel, Corrections Cabinet, State Office Building, Frankfort, Kentucky 40601.

1.1 Legal Assistance for Corrections Staff
1.2 News Media
1.6 Extraordinary Occurrence Reports [(Amended 5/15/86)]
1.9 Institutional Duty Officer [(Added 5/15/86)]
1.11 Population Counts and Reporting Procedures
2.1 Inmate Canteen
3.1 Code of Ethics
3.2 Inclement Weather and Emergency Conditions Policy
3.3 Holding of Second Jobs by Bureau Employees
3.7 Employment of Relatives
3.10 Staff Clothing and Personal Appearance
3.12 Institutional Staff Housing
3.14 Corrections Cabinet Payroll Deduction Policy and Procedure
4.1 Attendance at Professional Meetings
4.2 Staff Training and Development
4.3 Firearms and Chemical Agents Training
4.4 Educational Assistance Program
6.1 Open Records Law
8.4 Emergency Preparedness
9.1 Use of Force
9.3 Transportation of Convicted Offenders
9.4 Transportation of Inmates to Funerals or Bedside Visits
9.5 Return of Escapees by Automobile
9.6 Contraband
9.7 Storage, Issue and Use of Weapons Including Chemical Agents
9.8 Search Policy (Amended 6/13/86) [(Amended 5/15/86)]
9.9 Transportation of Inmates
9.10 Security Inspections
9.15 Institutional Entry and Exit Policy and Procedures
9.18 Informants
10.1 Inmates Serving a Sentence of Death
10.2 Special Management Inmates
10.3 Safekeepers
10.4 Special Needs Inmates
11.2 Nutritional Adequacy of the Diet for Inmates
11.3 Special Diet Procedures
12.1 Resident Clothing
13.1 Pharmacy Policy and Formulary
13.2 Health Maintenance Services
13.3 Medical Alert System
13.4 Health Program Audits
14.2 Personal Hygiene Items
14.3 Marriage of Inmates
14.4 Legal Services Program
[14.6 Inmate Grievance Procedure (Deleted 5/15/86)]
15.1 Hair and Grooming Standards
15.2 Offenses and Penalties
15.3 Meritorious Good Time
15.4 Governor's Meritorious Good Time Award
15.5 Restoration of Forfeited Good Time
15.6 Adjustment Procedures and Programs
16.1 General Inmate Visiting Procedure
16.2 Inmate Correspondence
16.3 Telephone Calls
17.1 Inmate Personal Property
17.2 Assessment Center Operations
17.3 Controlled Intake of Inmates
18.4 Classification of the Inmate
18.5 Custody/Security Guidelines [(Amended 5/15/86)]
18.6 Classification Document
18.7 Transfers
18.8 Guidelines for Transfers Between Institutions [(Amended 5/15/86)]
18.9 Out-of-State Transfers
18.10 Pre-Parole Progress Reports
18.11 Kentucky Correctional Psychiatric Center Transfer Procedures
18.12 Referral Procedure for Inmates Adjudicated Guilty But Mentally Ill
18.13 Population Categories
19.1 Government Services Projects
19.2 Community Services Projects
20.1 Study Release
20.6 Vocational Study Release
22.1 Privilege Trips
25.1 Gratuities
25.2 Public Official Notification of Release of an Inmate
25.3 Pre-Release
25.4 Inmate Furloughs
25.6 Community Center Program
25.7 Expedient Release
25.8 Extended Furloughs
27.1 Supervision: Case Classification
27.2 Risk/Needs Administration
27.4 Supervision Plan: General
27.8 Travel Restrictions
27.9 Conditions of Supervision
27.10 Preliminary Revocation Procedures
27.11 Apprehension and Transportation of Violators of Probation, Parole and Conditional Release
27.12 Fugitive Section/Probation and Parole
27.13 Supervision Fee
27.18 Absconder Procedures
27.19 Technical Violators
27.20 Intensive Supervision
28.2 Investigations: General
28.3 Pre-Sentence Investigations (To the Court)

28.4 Pre-Parole (Pre-Sentence) Investigation (To the Institution and State Parole Board)
28.5 Special Report to the Parole Board
28.7 Out-of-State Investigations

GEORGE W. WILSON, Secretary
APPROVED BY AGENCY: June 13, 1986
FILED WITH LRC: June 13, 1986 at noon
PUBLIC HEARING SCHEDULED: A public hearing on this regulation has been scheduled for July 23, 1986 at 9 a.m. at the auditorium in the State Office Building. Those interested in attending this hearing shall notify in writing: Barbara Jones, Office of General Counsel, 5th Floor, State Office Building, Frankfort, Kentucky 40601.

REGULATORY IMPACT ANALYSIS

Agency Contact Person: Barbara W. Jones
(1) Type and number of entities affected: 2,038 employees of the Corrections Cabinet, 4,704 inmates, 3,378 parolees, 5,318 probationers, and all visitors to state correctional institutions.
(a) Direct and indirect costs or savings to those affected:
1. First year: None
2. Continuing costs or savings: None
3. Additional factors increasing or decreasing costs (note any effects upon competition): None
(b) Reporting and paperwork requirements: None
(2) Effects on the promulgating administrative body:
(a) Direct and indirect costs or savings:
1. First year: None. All of the costs involved with the implementation of the regulation are included in the operational budget.
2. Continuing costs or savings: Same as (2)(a)1.
3. Additional factors increasing or decreasing costs: Same as (2)(a)1.
(b) Reporting and paperwork requirements: Monthly submission of policy revisions.
(3) Assessment of anticipated effect on state and local revenues: None
(4) Assessment of alternative methods; reasons why alternatives were rejected: None
(5) Identify any statute, administrative regulation or government policy which may be in conflict, overlapping, or duplication: None
(a) Necessity of proposed regulation if in conflict:
(b) If in conflict, was effort made to harmonize the proposed administrative regulation with conflicting provisions:
(6) Any additional information or comments: None

Tiering:
Was tiering applied? No. All policies are administered in a uniform manner.

CORRECTIONS CABINET
(Proposed Amendment)

501 KAR 6:030. Kentucky State Reformatory.

RELATES TO: KRS Chapters 196, 197, 439
PURSUANT TO: KRS 196.035, 197.020, 439.470, 439.590, 439.640
NECESSITY AND FUNCTION: KRS 196.035, 197.020, 439.470, 439.590, and 439.640 authorize the secretary to adopt, amend or rescind regulations necessary and suitable for the proper administration of the cabinet or any division therein. These regulations are in conformity with those provisions.

Section 1. Pursuant to the authority vested in the Corrections Cabinet the following policies and procedures are incorporated by reference on June 13 [May 15], 1986 and hereinafter should be referred to as Kentucky State Reformatory Policies and Procedures. Copies of the procedures may be obtained from the Office of the General Counsel, Corrections Cabinet, State Office Building, Frankfort, Kentucky 40601.

KSR 01-00-09 Public Information and News Media Relations
KSR 01-00-10 Entry Authorization for All Cameras and Tape Recorders Brought into the Institution
KSR 01-00-14 Extraordinary Occurrence Report
KSR 01-00-15 Cooperation and Coordination with Oldham County Court
KSR 01-00-18 Assistant Duty Officers
KSR 01-00-19 Personal Service Contract Personnel
KSR 01-00-20 Consent Decree Notification to Inmates
KSR 02-00-01 Inmate Canteen
KSR 02-00-03 Screening Disbursements from Inmate Personal Accounts
KSR 02-00-11 Inmate Personal Accounts
KSR 02-00-12 Institutional Funds and Issuance of Checks
KSR 03-00-01 Shift Assignment/Reassignment
KSR 03-00-02 Employee Dress and Personal Appearance
KSR 03-00-05 Intra-Agency Promotional Opportunity Announcements
KSR 03-00-06 Employee Time and Attendance
KSR 03-00-07 Travel Expense Reimbursement
KSR 03-00-08 Employee Tuition Assistance Reimbursement
KSR 03-00-10 Workers' Compensation
KSR 03-00-11 Equal Employment Opportunity Complaints
KSR 03-00-12 Employee Greivance Procedure
KSR 03-00-14 Prohibited Employee Conduct, Disciplinary Actions, and Appeal Process
KSR 03-00-15 Affirmative Action Program
KSR 03-00-16 Confidentiality of Personnel Records
KSR 03-00-19 Establishment of Personnel Records and Employee Right to Challenge Information Contained Therein
KSR 03-00-20 Personnel Selection, Retention and Promotion
KSR 03-00-21 Equal Employment Opportunities for Institutional Job Assignments and Job Classification Promotions
KSR 03-00-23 Work Planning and Performance Review (WPPR)
KSR 03-00-24 Inclement Weather and Employee Work Attendance
KSR 03-00-25 Medical Examination Requirements for New Employees
KSR 04-00-02 Staff Training and Development
KSR 05-00-02 Research Activities
KSR 05-00-03 Management Information Systems
KSR 06-00-01 Inmate Master File
KSR 06-00-02 Records Audit
KSR 06-00-03 Kentucky Open Records Law
KSR 07-00-02 Institutional Tower Room

	Regulations
KSR 07-00-03	Guidelines for Contractors
KSR 08-00-07	Inmate Family Emergency - Life Threatening Illness or Death in Inmate's Immediate Family
KSR 08-00-08	Notification of Inmate Family in Case of Serious Injury, Critical Medical Emergency, Major Surgery, or Death of an Inmate
KSR 08-00-09	Emergency Preparedness Training
KSR 09-00-04	Horizontal Gates/Box 1 Entry and Exit Procedure
KSR 09-00-05	Gate I Entrance and Exit Procedure
KSR 09-00-14	Use of Force
KSR 09-00-21	Crime Scene Camera
KSR 09-00-22	Collection, Preservation, and Identification of Physical Evidence
KSR 09-00-23	Drug Abuse Testing
KSR 09-00-25	Inmate Motor Vehicle Operator's License
KSR 09-00-26	Contraband Outside Institutional Perimeter (Added 6/13/86)
KSR 10-00-02	Special Management Inmates - Operations, Rules and Regulations for Unit D (Amended 6/13/86)
KSR 10-00-03	Special Needs Unit (Amended 6/13/86)
KRS 10-00-04	Unit D Admission/Release Ticket
KSR 11-00-01	Meal Planning for the General Population
KSR 11-00-02	Special Diets
KSR 11-00-03	Food Service Inspections
KSR 11-00-04	Dining Room Dress Code for Inmates
KSR 11-00-06	Health Standards/Regulations for Food Service Employees
KSR 11-00-07	Early Chow Line Passes for Medically Designated Inmates
KSR 12-00-01	Inmate Summer Dress Regulations
KSR 12-00-02	Sanitation and General Living Conditions
KSR 12-00-03	State Items Issued to Inmates
KSR 12-00-07	Regulations for Inmate Barbershop
KSR 13-00-01	Identification of Mentally Retarded Inmates
KSR 13-00-02	Regulations for Hospital Patients
KSR 13-00-03	Medication for Inmates Leaving Institution Grounds
KSR 13-00-04	Dental Care for Inmates
KSR 13-00-05	Medical and Dental Sick Call
KSR 13-00-07	Referral of Inmates Considered to Have Severe Emotional Disturbances
KSR 13-00-08	Institutional Laboratory Procedures
KSR 13-00-09	Institutional Pharmacy Procedures
KSR 13-00-10	Requirements for Medical Personnel
KSR 13-00-11	Preliminary Health Evaluation and Establishment of Inmate Medical Record
KSR 13-00-12	Vision Care/Optometry Services
KSR 13-00-14	Periodic Health Examinations for Inmates
KSR 13-00-15	Medical Alert System
KSR 13-00-16	Suicide Prevention and Intervention Program
KSR 14-00-01	Inmate Rights
KSR 14-00-02	A/C Center and Unit D Inmate Access to Legal Aide Services
KSR 14-00-04	Inmate Grievance Procedure
KSR 15-00-01	Operational Procedures and Rules and Regulations for Unit A, B, and C
KSR 15-00-02	Regulations Prohibiting Immate Control or Authority Over Other Inmate(s)
KSR 15-00-03	Governor's Meritorious Good Time Award
KSR 15-00-04	Restoration of Forfeited Good Time
KSR 15-00-05	Differential Status for SU (QUIT) Inmates
KSR 15-00-06	Inmate I.D. Cards [(Amended 5/15/86)]
KSR 15-00-07	Inmate Rules and Discipline - Adjustment Committee Procedures
KSR 15-00-08	Firehouse Living Area
KSR 16-00-01	Visiting Regulations
KSR 16-00-02	Inmate Correspondence and Mailroom Operations
KSR 16-00-03	Inmate Access to Telephones
KSR 17-00-01	Housing Unit Assignment
KSR 17-00-03	Notifying Inmates' Families of Admission and Procedures for Mail and Visiting
KSR 17-00-04	Assessment/Classification Center Operations, Rules and Regulations
KSR 17-00-05	Dormitory 10 Operations
KSR 17-00-06	Identification Department Admission and Discharge Procedures
KSR 17-00-07	Inmate Personal Property
KSR 18-00-01	Special Management Inmates - Unit D Classification
KSR 18-00-04	Returns from Other Institutions
KSR 18-00-05	Transfer of Residents to Kentucky Correctional Psychiatric Center
KSR 18-00-06	Classification
KSR 18-00-07	Special Notice Form
KSR 19-00-01	Inmate Work Incentives
KSR 19-00-02	On-the-Job Training Program
KSR 19-00-03	Safety Inspections of Inmate Work Assignment Locations
KSR 20-00-01	Vocational School Referral and Release Process
KSR 20-00-03	Academic School Programs
KSR 20-00-04	Criteria for Participation in Jefferson Community College Program
KSR 20-00-08	Integration of Vocational and Academic Education Programs
KSR 21-00-01	Legal Aide Office and Law Library Services and Supervision
KSR 21-00-02	Inmate Library Services
KSR 21-00-03	Library Services for Unit D
KSR 22-00-03	Inmate Organizations
KSR 23-00-02	Chaplain's Responsibility and Inmate Access to Religious Representatives
KSR 23-00-03	Religious Programming
KSR 25-00-01	Discharge of Residents to Hospital or Nursing Home
KSR 25-00-02	Violations of Law or Code of Conduct by Inmates on Parole Furlough
KSR 25-00-03	Pre-Parole Progress Report

GEORGE W. WILSON, Secretary

APPROVED BY AGENCY: July 13, 1986

FILED WITH LRC: June 13, 1986 at noon

PUBLIC HEARING SCHEDULED: A public hearing on this regulation has been scheduled for July 23, 1986 at 9 a.m. at the auditorium in the State Office Building. Those interested in attending this hearing shall notify in writing: Barbara Jones, Office of General Counsel, 5th Floor, State Office Building, Frankfort, Kentucky 40601.

REGULATORY IMPACT ANALYSIS

Agency Contact Person: Barbara W. Jones

(1) Type and number of entities affected: 498 employees of the Kentucky State Reformatory, 1,423 inmates, and all visitors to state

correctional institutions.
(a) Direct and indirect costs or savings to those affected:
1. First year: None
2. Continuing costs or savings: None
3. Additional factors increasing or decreasing costs (note any effects upon competition): None
(b) Reporting and paperwork requirements: None
(2) Effects on the promulgating administrative body:
(a) Direct and indirect costs or savings:
1. First year: None. All of the costs involved with the implementation of the regulation are included in the operational budget.
2. Continuing costs or savings: Same as (2)(a)1.
3. Additional factors increasing or decreasing costs: Same as (2)(a)1.
(b) Reporting and paperwork requirements: Monthly submission of policy revisions.
(3) Assessment of anticipated effect on state and local revenues: None
(4) Assessment of alternative methods; reasons why alternatives were rejected: None
(5) Identify any statute, administrative regulation or government policy which may be in conflict, overlapping, or duplication: None
(a) Necessity of proposed regulation if in conflict:
(b) If in conflict, was effort made to harmonize the proposed administrative regulation with conflicting provisions:
(6) Any additional information or comments: None

Tiering:
Was tiering applied? No. All policies are administered in a uniform manner.

CORRECTIONS CABINET
(Proposed Amendment)

501 KAR 6:040. Kentucky State Penitentiary.

RELATES TO: KRS Chapters 196, 197, 439
PURSUANT TO: KRS 196.035, 197.020, 439.470, 439.590, 439.640
NECESSITY AND FUNCTION: KRS 196.035, 197.020, 439.470, 439.590, and 439.640 authorize the secretary to adopt, amend or rescind regulations necessary and suitable for the proper administration of the cabinet or any division therein. These regulations are in conformity with those provisions.

Section 1. Pursuant to the authority vested in the Corrections Cabinet the following policies and procedures are incorporated by reference on June 13 [May 15], 1986 and hereinafter should be referred to as Kentucky State Penitentiary Policies and Procedures. Copies of the procedures may be obtained from the Office of the General Counsel, Corrections Cabinet, State Office Building, Frankfort, Kentucky 40601.

KSP 000000-06	Administrative Regulations
KSP 010000-04	Public Information and Media Communication
KSP 020000-01	General Guidelines for KSP Employees
KSP 020000-02	Service Regulations, Attendance, Hours of Work, Accumulation and Use of Leave
KSP 020000-03	Work Planning and Performance Review (WPPR)
KSP 020000-04	Employee Disciplinary Procedure
KSP 020000-05	Proper Dress for Uniformed and Non-Uniformed Personnel
KSP 020000-06	Employee Grievance Procedure
KSP 020000-07	Personnel Registers and Advertisements
KSP 020000-09	Maintenance, Confidentiality, and Informational Challenge of Material Contained in Personnel Files
KSP 020000-10	Overtime Policy
KSP 020000-15	Legal Assistance
KSP 020000-20	Equal Employment Opportunity Complaints
KSP 020000-23	Recruitment and Employment of Ex-Offenders
KSP 020000-24	Educational Assistance Program
KSP 020000-29	Promotional Opportunity Announcement Program
KSP 030000-01	Inventory Records and Control
KSP 030000-04	Requisition and Purchase of Supplies and Equipment
KSP 030000-05	Inmate Personal Funds
KSP 030000-06	Inmate Commissary Program
KSP 040000-02	Inmate Records Section (Amended 6/13/86)
KSP 040000-08	Inmate Equal Opportunity Policy
KSP 050000-14	Searches of Inmates, Visitors, Staff, Vehicles, Cells and Area Shakedown and Preservation of Evidence (Amended 6/13/86)
KSP 060000-01	Special Security Unit
KSP 060000-02	Operational Procedures for Disciplinary Segregation, Administrative Segregation, Administrative Control and Behavioral Control Units
KSP 060000-04	Protective Custody Unit
KSP 060000-11	Criteria for Disciplinary Segregation and Incentive Time Reduction Program
KSP 060000-12	Maximum Protective Custody
KSP 070000-01	Hospital Services
KSP 070000-02	Sick Call
KSP 070000-03	Health Evaluations
KSP 070000-04	Consultations
KSP 070000-05	Emergency Medical Procedure
KSP 070000-13	Pharmacy Procedures
KSP 070000-14	Medical Records
KSP 070000-16	Psychiatric and Psychological Services
KSP 070000-17	Dental Services for Special Management Units
KSP 070000-19	Optometric Services
KSP 070000-20	Menu Preparation and Planning
KSP 070000-24	Food Service, General Sanitation, Safety, and Protection Standards and Requirements
KSP 070000-25	Food Service Inspections
KSP 070000-30	Therapeutic Diets
KSP 090000-01	Inmate Work Programs
KSP 090000-03	Correctional Industries
KSP 100000-02	Visiting Program (Amended 6/13/86)
KSP 100000-03	Disposition of Unauthorized Property
KSP 100000-04	Inmate Grooming and Dress Code
KSP 100000-05	Procedures for Providing Clothing, Linens and Other Personal Items (Amended 6/13/86)
KSP 100000-06	Mail (Amended 6/13/86)
KSP 100000-07	Inmate Telephone Access
KSP 100000-08	Behavioral Counseling Record

KSP 100000-09	Due Process/Disciplinary Procedures
KSP 100000-11	Authorized and Unauthorized Property for Inmates [(Amended 5/15/86)]
KSP 100000-14	Property Room: Clothing Storage and Inventory
KSP 100000-15	Uniform Standards for Fire Safety, Sanitation and Security of all Cells
KSP 100000-18	Inmate Grievance Committee Hearings
KSP 100000-20	Legal Services Program (Amended 6/13/86)
KSP 100000-21	Photocopies for Non-Indigent Inmates with Special Court Deadlines (Deleted 6/13/86)
KSP 100000-22	Special Management Unit Legal Services Program [(Amended 5/15/86)]
KSP 100000-23	Inmate Legal Office/Legal Library [(Added 5/15/86)]
[KSP 100000-24	Resident Legal Services Office Library (Deleted 5/15/86)]
[KSP 100000-25	WKFC Resident - Access to Kentucky State Penitentiary Legal Library (Deleted 5/15/86)]
KSP 110000-03	Governor's Meritorious Good Time Award Committee
KSP 110000-04	Pre-Parole Progress Report
KSP 110000-06	General Guidelines of the Classification Committee
KSP 110000-07	Statutory Good Time Restoration
KSP 110000-08	Award of Meritorious Good Time (Amended 5/15/86)
KSP 110000-10	Special Needs Inmates
KSP 110000-11	Classification Committee - Transfer Requests
KSP 110000-12	Classification Committee - Inmate Work Assignments
KSP 110000-13	Classification Document
KSP 110000-14	Vocational School Placement
KSP 110000-15	Transfers to Kentucky Correctional Psychiatric Center (KCPC)
KSP 110000-16	Consideration of Further Treatment Requirements for Inmates Prior to Release
KSP 110000-19	Custody/Security Guidelines
KSP 120000-04	Academic Education
KSP 120000-07	Community Center Program
KSP 120000-08	Inmate Furloughs
KSP 120000-11	Religious Services - Staffing
KSP 120000-18	Religious Services - Religious Programming
KSP 120000-20	Marriage of Inmates
KSP 120000-24	Muslim Services
KSP 120000-31	Extended Furloughs
KSP 120000-32	Discharge of Inmates by Shock Probation
KSP 130000-10	Execution Plan

GEORGE W. WILSON, Secretary
APPROVED BY AGENCY: June 13, 1986
FILED WITH LRC: June 13, 1986 at noon
PUBLIC HEARING SCHEDULED: A public hearing on this regulation has been scheduled for July 23, 1986 at 9 a.m. at the auditorium in the State Office Building. Those interested in attending this hearing shall notify in writing: Barbara Jones, Office of General Counsel, 5th Floor, State Office Building, Frankfort, Kentucky 40601.

REGULATORY IMPACT ANALYSIS

Agency Contact Person: Barbara W. Jones
(1) Type and number of entities affected: 300 employees of the Kentucky State Penitentiary, 800 inmates, and all visitors to state correctional institutions.
(a) Direct and indirect costs or savings to those affected:
1. First year: None
2. Continuing costs or savings: None
3. Additional factors increasing or decreasing costs (note any effects upon competition): None
(b) Reporting and paperwork requirements: None
(2) Effects on the promulgating administrative body:
(a) Direct and indirect costs or savings:
1. First year: None. All of the costs involved with the implementation of the regulation are included in the operational budget.
2. Continuing costs or savings: Same as (2)(a)1.
3. Additional factors increasing or decreasing costs: Same as (2)(a)1.
(b) Reporting and paperwork requirements: Monthly submission of policy revisions.
(3) Assessment of anticipated effect on state and local revenues: None
(4) Assessment of alternative methods; reasons why alternatives were rejected: None
(5) Identify any statute, administrative regulation or government policy which may be in conflict, overlapping, or duplication: None
(a) Necessity of proposed regulation if in conflict:
(b) If in conflict, was effort made to harmonize the proposed administrative regulation with conflicting provisions:
(6) Any additional information or comments: None

Tiering:
Was tiering applied? No. All policies are administered in a uniform manner.

CORRECTIONS CABINET
(Proposed Amendment)

501 KAR 6:050. Luther Luckett Correctional Complex.

RELATES TO: KRS Chapters 196, 197, 439
PURSUANT TO: KRS 196.035, 197.020, 439.470, 439.590, 439.640
NECESSITY AND FUNCTION: KRS 196.035, 197.020, 439.470, 439.590, and 439.640 authorize the secretary to adopt, amend or rescind regulations necessary and suitable for the proper administration of the cabinet or any division therein. These regulations are in conformity with those provisions.

Section 1. Pursuant to the authority vested in the Corrections Cabinet the following policies and procedures are incorporated by reference on June 13 [May 15], 1986 and hereinafter should be referred to as Luther Luckett Correctional Complex Policies and Procedures. Copies of the procedures may be obtained from the Office of the General Counsel, Corrections Cabinet, State Office Building, Frankfort, Kentucky 40601.

LLCC 01-08-01 Institutional Legal Assistance

LLCC 01-09-01	Public Information and News Media Access
LLCC 01-12-01	Duty Officer Responsibilities
LLCC 02-01-02	Fiscal Management: Accounting Procedures
LLCC 02-01-03	Fiscal Management: Agency Funds
LLCC 02-01-04	Fiscal Management: Insurance
LLCC 02-03-01	Fiscal Management: Audits
LLCC 02-06-01	Property Inventory
LLCC 03-01-01	General Guidelines for LLCC Employees (Amended 6/13/86)
LLCC 03-01-02	Service Regulations, Attendance Accumulation and use of Leave (Amended 6/13/86) [(May 15, 1986)]
LLCC 03-02-01	Proper Dress for Uniformed Personnel
LLCC 03-03-01	Employee Grievance Mechanism
LLCC 03-04-01	Employee Records [(Amended 5/15/86)]
LLCC 03-05-01	Personnel Registers [(Amended 5/15/86)]
LLCC 03-06-01	Work Planning: Employee Evaluations and Evaluation Control
LLCC 03-08-01	Shift Transfers
LLCC 03-08-02	Rotation of Correctional Officers Between Central Security and Unit Management Staff
LLCC 03-09-01	Promotion Board [(Amended 5/15/86)]
LLCC 03-10-01	Affirmative Action: EEO [(Amended 5/15/86)]
LLCC 03-12-01	Confidentiality of Information Roles and Services of Consultants, Contract Personnel and Volunteers
LLCC 08-01-01	Offender Records
LLCC 08-04-01	Storage of Expunged Records
LLCC 10-03-09	Duties and Responsibilities of Building 1 and 2 Officer
LLCC 11-03-01	LLCC Population Categories
LLCC 11-07-01	Adjustment Procedures for Minor Rule Violations
LLCC 11-09-01	Rules and Regulations of the Unit
LLCC 11-13-01	Inmate Dress and Use of Access Areas
LLCC 11-15-01	Post-Parole Furloughs
LLCC 11-16-01	Restoration of Forfeited Good Time
LLCC 11-18-02	Use of Monitor Telephone
LLCC 11-19-01	Unit Shakedowns/Control of Excess Property
LLCC 11-20-01	Program Services for "Special Needs"/Mentally Ill Inmates
LLCC 12-01-01	Special Management Inmates
LLCC 12-04-01	Guidelines for (7E) PC Unit/General Living Conditions
LLCC 13-04-01	Food Service: Meals
LLCC 13-04-02	Food Service: Menu, Nutrition and Special Diets
LLCC 13-05-02	Medical Screening of Food Handlers
LLCC 13-06-01	Food Service: Inspections and Sanitation
LLCC 13-07-01	Food Service: Purchasing, Storage and Farm Products
LLCC 14-01-01	Sanitation, Living Condition Standards, and Cloting Issue
LLCC 14-05-01	Institutional Inspections
LLCC 15-01-01	Health Maintenance Services; Sick Call and Pill Call
LLCC 15-02-01	Mental Health/Psychological Services
LLCC 15-03-01	Pharmacy
LLCC 15-03-02	Use of Psychotropic Medications
LLCC 15-04-01	Dental Services
LLCC 15-05-02	Licensure and Training Standards
LLCC 15-06-02	Specialized Health Services
LLCC 15-06-03	Emergency Medical/Dental Care Services
LLCC 15-06-04	First Aid/CPR Training Program
LLCC 15-06-05	Suicide Prevention and Intervention Program
LLCC 15-07-01	Health Records
LLCC 15-08-01	Special Diets
LLCC 15-12-01	Special Needs Unit
LLCC 15-14-01	Informed Consent
LLCC 15-15-01	Medical Restraints
LLCC 15-16-01	Health Education/Special Health Programs
LLCC 16-01-01	Inmate Rights and Responsibilities
LLCC 16-02-01	Inmate Grievance Procedure
LLCC 16-03-01	Inmate Legal Services
LLCC 17-01-01	Due Process/Disciplinary Procedure
LLCC 18-01-01	Inmate Correspondence [(Amended 5/15/86)]
LLCC 18-01-02	Issuance of Legal Mail to Inmate Population [(Added 5/15/86)]
LLCC 18-02-01	Inmate Visiting
LLCC 18-02-03	Extended Visit and Furloughs
LLCC 18-02-04	Meritorious Visits
LLCC 18-03-03	Inmate Visiting (DSU/ASU)
LLCC 20-01-01	Personal Property Control
LLCC 20-02-01	Authorized Inmate Personal Property [(Amended 5/15/86)]
LLCC 20-03-01	Unauthorized Items
LLCC 20-04-02	Inmate Canteen
LLCC 20-05-01	Inmate Control of Personal Funds
LLCC 20-05-02	Storage and Disposition of Monies Received on Weekends, Holidays, and Between 4 p.m. and 8 a.m. Weekdays
LLCC 20-06-01	Procedure for Sending Appliances to Outside Dealers for Repair
LLCC 21-02-01	Classification/Security Levels
LLCC 21-03-01	Classification Process
LLCC 22-01-01	OJT/Job Assignments
LLCC 23-01-01	Academic School
LLCC 26-01-01	Religious Services
LLCC 28-01-01	Privileged Trips
LLCC 28-03-01	Temporary Release/Community Center Release
LLCC 28-04-01	Pre-Parole Progress Report
LLCC 28-04-02	Parole Eligibility Dates

GEORGE W. WILSON, Secretary

APPROVED BY AGENCY: June 13, 1986

FILED WITH LRC: June 13, 1986 at noon

PUBLIC HEARING SCHEDULED: A public hearing on this regulation has been scheduled for July 23, 1986 at 9 a.m. at the auditorium in the State Office Building. Those interested in attending this hearing shall notify in writing: Barbara Jones, Office of General Counsel, 5th Floor, State Office Building, Frankfort, Kentucky 40601.

REGULATORY IMPACT ANALYSIS

Agency Contact Person: Barbara W. Jones

(1) Type and number of entities affected: 198 employees of the Luther Luckett Correctional Complex, 577 inmates, and all visitors to state correctional institutions.

(a) Direct and indirect costs or savings to those affected:

1. First year: None
2. Continuing costs or savings: None
3. Additional factors increasing or decreasing costs (note any effects upon competition): None

(b) Reporting and paperwork requirements: None

(2) Effects on the promulgating administrative

body:
(a) Direct and indirect costs or savings:
1. First year: None. All of the costs involved with the implementation of the regulation are included in the operational budget.
2. Continuing costs or savings: Same as (2)(a)1.
3. Additional factors increasing or decreasing costs: Same as (2)(a)1.
(b) Reporting and paperwork requirements: Monthly submission of policy revisions.
(3) Assessment of anticipated effect on state and local revenues: None
(4) Assessment of alternative methods; reasons why alternatives were rejected: None
(5) Identify any statute, administrative regulation or government policy which may be in conflict, overlapping, or duplication: None
(a) Necessity of proposed regulation if in conflict:
(b) If in conflict, was effort made to harmonize the proposed administrative regulation with conflicting provisions:
(6) Any additional information or comments: None

Tiering:
Was tiering applied? No. All policies are administered in a uniform manner.

CORRECTIONS CABINET
(Proposed Amendment)

501 KAR 6:070. Kentucky Correctional Institution for Women.

RELATES TO: KRS Chapters 196, 197, 439
PURSUANT TO: KRS 196.035, 197.020, 439.470, 439.590, 439.640
NECESSITY AND FUNCTION: KRS 196.035, 197.020, 439.470, 439.590, and 439.640 authorize the secretary to adopt, amend or rescind regulations necessary and suitable for the proper administration of the cabinet or any division therein. These regulations are in conformity with those provisions.

Section 1. Pursuant to the authority vested in the Corrections Cabinet the following policies and procedures are incorporated by reference on June 13 [April 14], 1986 and hereinafter should be referred to as Kentucky Correctional Institution for Women Policies and Procedures. Copies of the procedures may be obtained from the Office of the General Counsel, Corrections Cabinet, State Office Building, Frankfort, Kentucky 40601.

KCIW 01-06-01	Legal Assistance for Corrections Staff
KCIW 01-08-01	News Media Access
KCIW 02-01-01	Comprehensive Insurance Coverage
KCIW 02-02-01	Fiscal Management: Audits
KCIW 02-02-03	Fiscal Management: Checks
KCIW 02-02-04	Institution Purchasing Procedures
KCIW 02-03-01	Inventory Control of Non-Expendable Personal Property
KCIW 02-03-03	Criteria for Selection of Bidders and Vendors
KCIW 02-04-01	Accounting Procedures
KCIW 02-05-01	Inmate Canteen/Staff Canteen
KCIW 02-07-01	Release of C.E.T.A. Money Earned
KCIW 03-01-01	Travel Expense Reimbursement
KCIW 03-02-01	General Orders for Staff
KCIW 03-02-02	Inclement Weather and Emergency Conditions
KCIW 03-03-01	Employee Grievance Procedure
KCIW 03-05-01	Employee Personnel File
KCIW 03-06-01	Affirmative Action and the Equal Employment Opportunity Complaint Procedure
KCIW 03-08-01	Employee Performance Evaluations
KCIW 03-09-01	Payroll and Personnel Manning Records
KCIW 03-10-01	Promotion Committee
KCIW 03-11-01	Personnel Registers
KCIW 03-12-01	Criminal History Checks on all Personnel and the Recruitment and Employment of Ex-Offenders
KCIW 06-01-01	Inmate Records
KCIW 06-01-02	Transfers to Community Centers and the Minimum Security Unit
KCIW 06-01-03	Storage of Expunged Records
KCIW 10-01-01	Special Management Unit General Operation and Regulations
KCIW 10-01-02	Special Management Unit Programs, Placement and Review
KCIW 11-01-01	Food Service Operation Inspections
KCIW 11-01-02	Budgeting, Accounting, and Purchasing Procedures for Food Products
KCIW 11-02-01	Menu Preparation/Special Diets
KCIW 11-03-01	General Guidelines for Food Service Operations Manager
KCIW 11-03-02	General Guidelines for Food Service Workers
KCIW 11-04-01	Health Standards, Regulations for Food Service Workers
KCIW 12-01-01	Control of Pests and Vermin
KCIW 12-02-01	Laundry Facilities/Clothing Issuance
KCIW 12-02-03	Donated Items
KCIW 12-04-01	Sanitation and General Living Conditions
KCIW 13-01-01	Provision of Medical and Dental Care
KCIW 13-01-02	Preliminary Health Screening and Appraisal
KCIW 13-01-03	Use of Pharmaceutical Products
KCIW 13-03-01	Emergency Care
KCIW 13-03-02	Infirmary Care and Outside Services
KCIW 13-03-03	Outside Hospital Security
KCIW 13-04-01	Medical Alert System
KCIW 13-04-02	Psychiatric/Psychological Services
KCIW 13-06-01	Informed Consent
KCIW 13-07-01	Detoxification and Alcohol or Chemical Dependency Guidelines
KCIW 13-08-01	Medical Exams for New Employees
KCIW 14-01-02	Inmate Rights
KCIW 14-02-01	Access to Attorneys and Designated Counsel Substitutes
KCIW 14-03-01	Inmates Are Not Subject to Discrimination Based on Race, Religion, National Origin, Sex, Handicap, or Political Beliefs
KCIW 14-04-01	Inmate Grievance Procedure
KCIW 15-01-01	Offenses and Penalties
KCIW 15-01-02	Adjustment Committee Procedures and Programs
KCIW 15-03-01	Inmate Rule Book
KCIW 15-04-01	Incentive Levels System
KCIW 16-01-01	Inmate Correspondence
KCIW 16-01-02	Inmate Mail Distribution
KCIW 16-01-03	Staff Mail
KCIW 16-02-01	Inmate Access to Telephone
KCIW 16-02-02	Intra-Institution Phone Calls

KCIW 16-03-01	Inmate Visiting Regulations (Amended 6/13/86)
KCIW 16-03-02	Unauthorized Items for Picnic Lunches, Food Packages and Regular Packages
KCIW 16-04-01	Inmate Indigent Fund
KCIW 16-05-01	Vendor Packages, Appliance Orders and Drug Store Orders
KCIW 17-01-01	Assessment Center Operation and Reception Programs
KCIW 17-01-02	Assessment/Classification Center Operations, Rules and Regulations
KCIW 17-01-03	Assessment and Classification Unit Property Guidelines
KCIW 17-02-01	Identification Department Admissions
KCIW 17-03-01	Notifying Inmates Families of Admission and Procedures for Mail and Visiting
KCIW 17-05-01	Inmate Personal Property
KCIW 18-01-02	Institutional Housing Assignments
KCIW 18-02-01	Classification Procedures
KCIW 18-05-01	Special Needs Inmates
KCIW 18-06-01	Institutional Status Codes
KCIW 19-01-01	Inmate Work/Program Assignments
KCIW 19-03-01	Landscape and Maintenance Work Details
KCIW 20-01-01	Education Programs
KCIW 20-01-03	Vocational Education: Curriculum Flexible Schedule, Up-grade Programs and Release Preparation Program
KCIW 20-01-04	Entry - Exit Vocational School
KCIW 20-01-05	Vocational Programs: Approved, Assessed and Contain Guidelines for Vocational Records
KCIW 20-01-06	Vocational Education: Staffing Patterns/Requirements
KCIW 20-01-07	Vocational Counselor
KCIW 20-01-08	Vocational Education: Community Resources and the Integration with Academic Progress
KCIW 20-01-09	Vocational Education: Support Equipment
KCIW 20-01-10	Control of Flammable, Hazardous, Toxic and Caustic Materials in the Vocational Area
KCIW 22-01-04	Inmate Club Activities
KCIW 23-01-01	Religious Services
KCIW 25-01-01	Pre-Parole Progress Report
KCIW 25-02-01	Temporary Release/Community Center
KCIW 25-02-02	Furloughs
KCIW 25-03-01	Escorted Leave into the Community

GEORGE W. WILSON, Secretary
APPROVED BY AGENCY: June 13, 1986
FILED WITH LRC: June 13, 1986 at noon
PUBLIC HEARING SCHEDULED: A public hearing on this regulation has been scheduled for July 23, 1986 at 9 a.m. at the auditorium in the State Office Building. Those interested in attending this hearing shall notify in writing: Barbara Jones, Office of General Counsel, 5th Floor, State Office Building, Frankfort, Kentucky 40601.

REGULATORY IMPACT ANALYSIS

Agency Contact Person: Barbara W. Jones
(1) Type and number of entities affected: 76 employees of the Kentucky Correctional Institution for Women, 163 inmates, and all visitors to state correctional institutions.
(a) Direct and indirect costs or savings to those affected:
1. First year: None
2. Continuing costs or savings: None
3. Additional factors increasing or decreasing costs (note any effects upon competition): None
(b) Reporting and paperwork requirements: None
(2) Effects on the promulgating administrative body:
(a) Direct and indirect costs or savings:
1. First year: None. All of the costs involved with the implementation of the regulation are included in the operational budget.
2. Continuing costs or savings: Same as (2)(a)1.
3. Additional factors increasing or decreasing costs: Same as (2)(a)1.
(b) Reporting and paperwork requirements: Monthly submission of policy revisions.
(3) Assessment of anticipated effect on state and local revenues: None
(4) Assessment of alternative methods; reasons why alternatives were rejected: None
(5) Identify any statute, administrative regulation or government policy which may be in conflict, overlapping, or duplication: None
(a) Necessity of proposed regulation if in conflict:
(b) If in conflict, was effort made to harmonize the proposed administrative regulation with conflicting provisions:
(6) Any additional information or comments: None
Tiering:
Was tiering applied? No. All policies are administered in a uniform manner.

CORRECTIONS CABINET
(Proposed Amendment)

501 KAR 6:080. Corrections Cabinet Manuals.

RELATES TO: KRS Chapters 196, 197, 439
PURSUANT TO: KRS 196.035, 197.020, 439.470, 439.590, 439.640
NECESSITY AND FUNCTION: KRS 196.035, 197.020, 439.470, 439.590, and 439.640 authorize the secretary to adopt, amend or rescind regulations necessary and suitable for the proper administration of the cabinet or any division therein. These regulations are in conformity with those provisions.

Section 1. Pursuant to the authority vested in the Corrections Cabinet the following policies and procedures are incorporated by reference on June 13 [May 15], 1986 and hereinafter should be referred to as Corrections Cabinet Manuals. Copies of the procedures may be obtained from the Office of the General Counsel, Corrections Cabinet, State Office Building, Frankfort, Kentucky 40601.

Offender Records Manual - None.
Stock Procedure Manual - Yes [None].
Food Services Manual - None.
Classification Manual - Yes [None].

GEORGE W. WILSON, Secretary
APPROVED BY AGENCY: June 13, 1986
FILED WITH LRC: June 13, 1986 at noon
PUBLIC HEARING SCHEDULED: A public hearing on this regulation has been scheduled for July 23, 1986 at 9 a.m. at the auditorium in the State Office Building. Those interested in attending

this hearing shall notify in writing: Barbara Jones, Office of General Counsel, 5th Floor, State Office Building, Frankfort, Kentucky 40601.

REGULATORY IMPACT ANALYSIS

Agency Contact Person: Barbara W. Jones
(1) Type and number of entities affected: 2,038 employees of the Corrections Cabinet, 4,704 inmates, 3,378 parolees, 5,318 probationers, and all visitors to state correctional institutions.
(a) Direct and indirect costs or savings to those affected:
1. First year: None
2. Continuing costs or savings: None
3. Additional factors increasing or decreasing costs (note any effects upon competition): None
(b) Reporting and paperwork requirements: None
(2) Effects on the promulgating administrative body:
(a) Direct and indirect costs or savings:
1. First year: None. All of the costs involved with the implementation of the regulation are included in the operational budget.
2. Continuing costs or savings: Same as (2)(a)1.
3. Additional factors increasing or decreasing costs: Same as (2)(a)1.
(b) Reporting and paperwork requirements: Monthly submission of policy revisions.
(3) Assessment of anticipated effect on state and local revenues: None
(4) Assessment of alternative methods; reasons why alternatives were rejected: None
(5) Identify any statute, administrative regulation or government policy which may be in conflict, overlapping, or duplication: None
(a) Necessity of proposed regulation if in conflict:
(b) If in conflict, was effort made to harmonize the proposed administrative regulation with conflicting provisions:
(6) Any additional information or comments: None

Tiering:
Was tiering applied? No. All policies are administered in a uniform manner.

MOTOR VEHICLE COMMISSION
(Proposed Amendment)

605 KAR 1:150. Temporary sales location.

RELATES TO: KRS 190.010 to 190. 080
PURSUANT TO: KRS 190.020, 190.073
NECESSITY AND FUNCTION: KRS 190.020 gives the Motor Vehicle Commission, under administrative regulations promulgated by it, supervisory authority over licenses issued by said commission pursuant to the provisons of KRS 190.010 to 190.080. KRS 190.073 mandates the Motor Vehicle Commission to promulgate such regulations. KRS 190.058(8) further mandates the commission to insure that the distribution and sale of new motor vehicles is conducted as provided by statute and under the commisson's rules. KRS 190.015 states that it is the finding and declaration of the legislature that the commission regulate the distribution and sale of all vehicles within this state in order to promote the public interest and public welfare. A liscensed motor vehicle dealer is required to have an established place of business at which the business of such a dealer may be lawfully carried on, and may change the location of his business only under the endorsement of change of location by the licensor (KRS 190.035 and 190.030(7) respectively). Modern marketing techniques and economic conditions have resulted in the growing use of temporary locations by a <u>dealer or</u> combination of dealers for limited sales promotions. The purpose of this regulation is to fulfill the requirements of KRS Chapter 190 which mandates the commission to supervise such sales and activities and to insure that all business conducted pursuant to a temporary sale location permit conforms to the requirements of the statutes and regulations governing the activities of motor vehicle dealers.

Section 1. The licensor may issue[, at its discretion, for good cause shown,] a temporary sale location permit for the purpose of a limited sales promotion as provided for herein.

Section 2. (1) Application for a temporary sale location permit must be made on forms provided by the licensor and must be filed with the licensor a minimum of ten (10) days before the next regularly scheduled meeting of the Motor Vehicle Commission before the requested permit period. Application shall be made by the motor vehicle dealer <u>or dealers</u> [licensees] participating <u>in the temporary sale</u>.
(2) The application for a temporary sale location permit shall contain the following information:
(a) The names and addresses of all participating licensed dealers;
(b) The inclusive dates of the proposed temporary sale activity;
(c) The location of the proposed temporary sale activity;
(d) Proof of insurance coverage on the proposed temporary sale premises, of the same type as required by KRS 190.033, effective for the length of the proposed temporary sale activity;
(e) A lease or other written memorandum signed by the owner of the property upon which the temporary sale activity is to occur, evidencing said owner's permission for the proposed temporary sale activity to occur.
(f) A statement signed by the proper local official showing that the proposed temporary sale activity may be lawfully carried on in accordance with the terms of all applicable building codes, zoning and other land use regulatory ordinances.

Section 3. [The temporary sale location permit shall be issued only to two (2) or more licensed motor vehicle dealers who both shall be licensed in the same municipality or county.] The permit shall state upon its face the duration of its validity which in no event shall exceed five (5) successive days, the location for which it is issued and the <u>name or</u> names of the participating <u>licensee or licensees</u> [licensed dealers].

Section 4. The temporary sale location permit shall authorize the participating <u>licensee or licensees</u> [motor vehicle dealers] to engage in the sales activity for which they are licensed,

at a location other than their respective established place of business only in the municipality or county of their established place of business for the duration of the permit. Franchised motor vehicle dealers may not conduct a sale at a temporary sale location in the relevant market area assigned by the manufacturer to another franchised motor vehicle dealer of the same line make without permission of such other franchised motor vehicle dealer. [The use of the permit provided for herein shall be restricted in any area where utilization of the permit without the permission of a franchized dealer would impose an unnecessary competitive environment between the franchised motor vehicle dealer and another franchised motor vehicle dealer whose permanent place of business is outside the franchised area, and who is a franchised dealer of the same line make.]

Section 5. All business conducted under a temporary sale location permit must conform to the requirements of the statutes and regulation governing the activities of motor vehicle dealer licensees.

Section 6. The fee for a temporary sale location permit shall be $100 per participating dealer.

JAMES O. BUTTS, Chairman
APPROVED BY AGENCY: June 13, 1986
FILED WITH LRC: June 13, 1986 at 11 a.m
PUBLIC HEARING SCHEDULED: A public hearing on this amended regulation will be held on July 23, 1986 at 10 a.m. at the office of the Motor Vehicle Commission, 114 W. Clinton Street, Frankfort, Kentucky. Those interested in attending this hearing shall contact: David Garnett, Executive Director, Kentucky Motor Vehicle Commission, 114 W. Clinton Street, Frankfort, Kentucky 40601.

REGULATORY IMPACT ANALYSIS

Agency Contact Person: David Garnett
(1) Type and number of entities affected:
(a) Direct and indirect costs or savings to those affected: All Kentucky Retail Motor Vehicle Dealers, approximately 2,700 in number.
1. First year: The amendment is not expected to have any bearing on cost or savings.
2. Continuing costs or savings: See 1(a)1, above.
3. Additional factors increasing or decreasing costs (note any effects upon competition): See 1(a)1, above.
(b) Reporting and paperwork requirements: The amendment is not expected to change any reporting or paperwork requirements.
(2) Effects on the promulgating administrative body: The amendment will not affect costs or savings to the agency, nor will it affect reporting and paperwork requirements.
(a) Direct and indirect costs or savings:
1. First year: See (2) above.
2. Continuing costs or savings: See (2) above.
3. Additional factors increasing or decreasing costs: See (2) above.
(b) Reporting and paperwork requirements: See (2) above.
(3) Assessment of anticipated effect on state and local revenues: The amendment is not expected to affect state or local revenue.
(4) Assessment of alternative methods; reasons why alternatives were rejected: The alternative to this proposed amendment is the existing regulation. The amendment is proposed with due consideration for current economic conditions, and the belief of the agency is that the amended regulation will adequately serve to protect the public interest and public welfare and will otherwise protect and preserve the investments and properties of the citizens of this state.
(5) Identify any statute, administrative regulation or government policy which may be in conflict, overlapping, or duplication: None
(a) Necessity of proposed regulation if in conflict: N/A
(b) If in conflict, was effort made to harmonize the proposed administrative regulation with conflicting provisions: N/A
(6) Any additional information or comments: None

Tiering:
Was tiering applied? No. The proposed amendment would affect all classes of licensees in a uniform manner. There is no disproportionate impact on the regulated entities.

LABOR CABINET
Department of Workplace Standards
Kentucky Occupational Safety and Health
(Proposed Amendment)

803 KAR 2:015. General industry standards.

RELATES TO: KRS Chapter 338
PURSUANT TO: KRS Chapter 13A
NECESSITY AND FUNCTION: KRS 338.051 and 338.061 authorize the Kentucky Occupational Safety and Health Standards Board to adopt and promulgate occupational safety and health rules, regulations, and standards. Consistent with this authority the following regulations contain those standards to be enforced by the Division of Occupational Safety and Health Compliance. The Occupational Safety and Health Standards Board hereby adopts the following regulations applicable to general industry. Necessary for effective enforcement of the purposes and policies of the Occupational Safety and Health Act which is to insure so far as is possible, safe and healthful working conditions of Kentucky workers (KRS 338.011).

Section 1. Batteries. Changing and charging storage batteries (for automotive-type battery charging installations, in-vehicle charging of batteries, and battery jump starting of vehicles).
(1) Facilities shall be provided for flushing electrolyte from the eyes and skin with water when changing or charging storage batteries. An adequate water supply shall be within the work area.
(2) No battery shall be charged or discharged within a closed or unvented container. The batteries shall be charged:
(a) In the open; or
(b) In a mechanically-ventilated space; or
(c) In a space providing at least twenty (20) cubic feet per ampere of charging capacity.
(3) A face shield or goggles shall be provided and available at each charging unit. The use of the face shield or goggles shall be required for

connection and disconnection of vehicle or charger leads to the battery terminals and for the addition or pouring of electrolyte.

(4) Employees shall wear face shields or goggles during installation and removal of batteries from vehicles, while connecting and disconnecting battery charger or jumper cable leads, and while handling electrolyte.

(5) Employees shall be instructed to:

(a) Turn off the battery charger to connect or disconnect the battery;

(b) Wash acid spills immediately; and

(c) Flush electrolyte from eyes and skin with water for ten (10) minutes.

Section 2. Safety and Testing of Supply Lines in Excess of 600 Volts. (1) Definitions:

(a) Disconnected means disconnected from any electrical source of supply;

(b) Guarded: Protected by personnel, covered, fenced, or enclosed by means of suitable castings, barrier, rails, screens, mats, platforms, or other suitable devices in accordance with standard barricading techniques designed to prevent dangerous approach or contact by persons or objects. (Note: Wires, which are insulated but not otherwise protected, are not considered as guarded);

(c) Hold cards (also called "hold tags"): A card or tagtype device, usually having a predominant color of white or red which warns against or which cautions against the operation of a particular switch, device, circuit, tool, machine, etc.;

(d) Near: A distance no closer than that shown in the table in subsection (3)(c) of this section;

(e) Qualified person: A person who, because of experience and training is familiar with the construction and operation of the apparatus or equipment and the hazards involved in the performance of the job.

(2) Purpose:

(a) The intent and purpose of this regulation is to provide and establish safety procedures for testing equipment to protect electrical workers from hazards resulting from exposure to high voltage;

(b) This regulation shall apply to non-utility electrical workers who are engaged in electrical construction and/or maintenance of electrical conductors and equipment rated at 600 volts and above.

(3) Energized conductors and equipment:

(a) Only qualified employees shall work on or near high voltage conductors or equipment;

(b) Personal protective equipment shall be provided by the employer and used by the employee when working on or near energized, ungrounded high voltage conductors or equipment;

(c) No employee shall approach or take any conductive object, without an approved insulating handle, within the minimum distance specified in the table below, unless the energized part is insulated or guarded from the employee, or the employee is effectively insulated from the live parts. Rubber gloves (sleeves if necessary) rated for the voltage involved shall be considered effective insulation of the employee from the energized part.

Minimum Clear Distance From Live Parts

Voltage Phase to Phase (Kilovolts)	Distance Phase to Employee
0.6 to 34.5	2'
34.5 to 46	2 1/2'
46 to 69	3'
69 to 115	3' 4"
115 to 138	3' 6"
138 to 169	3' 8"

(4) De-energized conductor or equipment:

(a) Existing conditions shall be determined before starting work on electrical conductor and/or equipment;

(b) Before any work is performed, all electrical switches, breakers and associated disconnecting devices shall be opened, made inoperable and hold tagged out by the person in charge. Employees shall be trained and thoroughly instructed in the tagging procedure. One (1) qualified person, for example: foreman, general foreman or first class electrician, of each crew shall be responsible for attaching hold tags and/or hold cards to the disconnecting means. When more than one (1) crew is involved in the work, multiple hold tags or hold cards shall be placed in the handle of the disconnecting equipment. The use of such tags must be respected. Equipment or items so tagged must not be activated or used without full and proper authority of a responsible person whose signature appears on the tag;

(c) Conductors shall be short circuited and grounded wherever possible;

(d) Capacitors may be components of apparatus of the disconnected electrical system. Before employees are allowed to work, the capacitors shall be discharged, short circuited and grounded;

(e) When de-energizing conductors and equipment and the means of disconnecting from the energy source is not visible open, a voltage test shall be made before starting work. An operational check shall be made of the voltage tester prior to and following the voltage test to determine reliability of the testing device. The test device must be handled and used while wearing or using approved protective equipment during the test;

(f) All conductors and equipment shall be treated as energized until tested, short circuited and effectively grounded except when the circuit involved is isolated from all possible sources of energizing voltage from another circuit, induced voltage or back feed;

(g) The voltage condition of de-energized conductors and/or equipment shall be determined with testing equipment designed for the applicable voltage;

(h) Upon completion of work on de-energized conductors and equipment, the person responsible shall ascertain that all employees under his jurisdiction are clear and that all protective short circuit and grounding lines are removed. The qualified person(s) shall then remove his hold tag(s). Only at this time shall conductors and equipment be re-energized.

Section 3. Safety Belts, Lanyards and Lifelines. (1) Employees working from open-sided unguarded floors, pipe racks, and ledges,

platforms, walkways, machinery, stockshelves, or similar unguarded working surfaces which are elevated ten (10) feet or more above a lower level shall be secured by safety belts and lanyards, lifelines where necessary, or shall be protected by safety nets.

(2) Lanyards shall have a nominal breaking strength of 5,400 lbs. The combination of safety belts and lanyards, lifelines where necessary, shall be designed to permit a fall of not more than five (5) feet.

(3) All safety belt and lanyard hardware, except rivets, shall be capable of withstanding a tensile loading of 4,000 lbs. without cracking, breaking or taking a permanent deformation.

(4) Lifelines, where necessary, shall be secured above the point of operation to an anchorage of structural member capable of supporting a minimum dead weight of 5,400 lbs.

(5) This standard shall not pre-empt any applicable standard now in effect.

Section 4. Off-Highway Motor Vehicles and Equipment. [Off-Highway Equipment Vehicles, and Material Handling Equipment.] (1) General requirements. [29 CFR 1926.600 "Equipment" as published in the 1981 Title 29 Code of Federal Regulations, Part 1926, is adopted by reference.]

(a) Heavy machinery, equipment, or parts thereof, which are suspended or held aloft by use of slings, hoists, or jacks shall be substantially blocked or cribbed to prevent falling or shifting before employees are permitted to work under or between them. Bulldozers and scraper blades, end-loader buckets, dump bodies, and similar equipment, shall be either fully lowered or blocked when being repaired or when not in use. All controls shall be in a neutral position, with the motors stopped and brakes set, unless work being performed requires otherwise.

(b) Whenever the equipment is parked, the parking brake shall be set. Equipment parked on inclines shall have the wheels chocked and the parking brake set.

(c) All cab glass shall be safety glass, or equivalent, that introduces no visible distortion affecting the safe operation of any machine covered by this subpart.

(d) All equipment covered by this subpart shall comply with the requirements of §29 CFR 1910.180(j)(1) when working or being moved in the vicinity of power lines or energized transmitters.

(2) Motor vehicles. [29 CFR 1926.601 "Motor Vehicles" as published in the 1981 Title 29 Code of Federal Regulations, Part 1926, is adopted by reference.]

(a) Coverage. Motor vehicles as covered by this part are those vehicles that operate within an off-highway jobsite. The requirements of this section do not apply to equipment for which rules are prescribed in subsection (3) of this section.

(b) General requirements. All vehicles shall have a service brake system, an emergency brake system, and a parking brake system. These systems may use common components, and shall be maintained in operable condition.

(c) Whenever visibility conditions warrant additional light, all vehicles, or combinations of vehicles, in use shall be equipped with at least two (2) headlights and two (2) taillights in operable condition.

(d) All vehicles, or combination of vehicles, shall have brake lights in operable condition regardless of light conditions.

(e) All vehicles shall be equipped with an adequate audible warning device at the operator's station and in an operable condition.

(f) No employer shall use any motor vehicle equipment having an obstructed view to the rear unless:

1. The vehicle has a reverse signal alarm audible above the surrounding noise level; or

2. The vehicle is backed up only when an observer signals that it is safe to do so.

(g) All vehicles with cabs shall be equipped with windshields and powered wipers. Cracked and broken glass shall be replaced. Vehicles operating in areas or under conditions that cause fogging or frosting of the windshields shall be equipped with operable defogging or defrosting devices.

(h) All haulage vehicles, whose pay load is loaded by means of cranes, power shovels, loaders, or similar equipment, shall have a cab shield and/or canopy adequate to protect the operator from shifting or falling materials.

(i) Tools and material shall be secured to prevent movement when transported in the same compartment with employees.

(j) Vehicles used to transport employees shall have seats firmly secured and adequate for the number of employees to be carried.

(k) The employer will provide and insure the use of seat belts and anchorages meeting the requirements of 49 CFR Part 571 (Department of Transportation, Federal Motor Vehicle Safety Standards).

(l) Trucks with dump bodies shall be equipped with positive means of support, permanently attached, and capable of being locked in position to prevent accidental lowering of the body while maintenance or inspection work is being done.

(m) Operating levers controlling hoisting or dumping devices on haulage bodies shall be equipped with a latch or other device which will prevent accidental starting or tripping of the mechanism.

(n) Trip handles for tailgates of dump trucks shall be so arranged that, in dumping, the operator will be in the clear.

(o) Each employer shall assure that the following parts, equipment, and accessories are in safe operating condition and free of apparent damage that could cause failure while in use: service brakes, including trailer brake connections; parking system (hand brake); emergency stopping system (brakes); tires; horn; steering mechanism; coupling devices; seat belts; operating controls; and safety devices. All defects shall be corrected before the vehicle is placed in service. These requirements also apply to equipment such as lights, reflectors, windshield wipers, defrosters, fire extinguishers, etc., where such equipment is necessary.

(3) Material handling equipment. [29 CFR 1926.602 "Material Handling Equipment" as published in the 1981 Title 29 Code of Federal Regulations, Part 1926, is adopted by reference.]

(a) Equipment; general. These rules apply to the following types of equipment: scrapers, loaders, crawler or wheel tractors, bulldozers, off-highway trucks, graders, agricultural and

industrial tractors, and similar equipment. The promulgation of specific rules for compactors and rubber-tired "skid-steer" equipment is reserved pending consideration of standards currently being developed.

(b) Seating and seat belts. Each employer shall insure safe seating with seat belts on all equipment covered by this section. J386, Society of Automotive Engineers Handbook, 1986, Seat Belts for Construction Equipment. Seat belts for agricultural and light industrial tractors shall meet the seat belt requirements of Society of Automotive Engineers J1194, Society of Automotive Engineers Handbook, 1986, Operator Protection for Agricultural and Light Industrial Tractors.

(c) Seat belts need not be provided for equipment which is designed only for standup operation.

(d) Seat belts need not be provided for equipment which does not have roll-over protective structure (ROPS) or adequate canopy protection.

(e) Brakes. All equipment mentioned in subsection (a) of this section shall have a service braking system capable of stopping and holding the equipment fully loaded, as specified in Society of Automotive Engineers SAE J237, Loader Dozer, Society of Automotive Engineers Handbook, 1986, J236, Graders, Society of Automotive Engineers Handbook, 1986, and J319b, Scrapers, Society of Automotive Engineers Handbook, 1986. Brake systems for self-propelled rubber-tired off-highway equipment manufactured after January 1, 1987 shall meet the applicable minimum performance criteria set forth in the following Society of Automotive Engineers Recommended Practices:

Self Propelled Scrapers	SAE J319B, Society of Automotive Engineers Handbook, 1986.
Self-Propelled Graders	SAE J236, Society of Automotive Engineers Handbook, 1986.
Trucks and Wagons	SAE J166, Society of Automotive Engineers Handbook, 1986.
Front-End Loaders and Dozers	SAE J237, Society of Automotive Engineers Handbook, 1986.

(f) Roll-over protective structures for off-highway trucks. The promulgation of standards for roll-over protective structures for off-highway trucks is reserved pending further study and development.

(g) Audible alarms.

1. All bidirectional machines, such as rollers, compactors, front-end loaders, bulldozers, and similar equipment, shall be equipped with a horn, distinguishable from the surrounding noise level, which shall be operated as needed when the machine is moving in either direction. The horn shall be maintained in an operative condition.

2. No employer shall permit material handling equipment or compacting equipment which has an obstructed view to the rear to be used in reverse gear unless the equipment has in operation a reverse signal alarm distinguishable from the surrounding noise level or an employee signals that it is safe to do so.

(h) Scissor points. Scissor points on all front-end loaders, which constitute a hazard to the operator during normal operation, shall be guarded.

Section 5. Roll-over Protective Structures; Overhead Protection. (1) Roll-over protective structure (ROPS) for material handling equipment.

(a) Coverage. This section applies to the following types of material handling equipment: To all rubber-tired, self-propelled scrapers, rubber-tired front-end loaders, rubber-tired dozers, wheel-type agricultural and industrial tractors, crawler tractors, crawler-type loaders, and motor graders, with or without attachments, that are used in general industry work. This requirement does not apply to sideboom pipelaying tractors.

(b) The promulgation of specific standards for roll-over protective structures for compactors and rubber-tired skid-steer equipment is reserved pending consideration of standards currently being developed.

(c) Equipment manufactured on or after January 1, 1987. Material handling machinery described in paragraph (a) of this subsection and manufactured on or after January 1, 1987, shall be equipped with roll-over protective structures which meet the minimum performance standards prescribed in subsections (2) and (3) of this section as applicable.

(d) Equipment manufactured before January 1, 1987. All material handling equipment described in paragraph (a) of this subsection and manufactured or placed in service (owned or operated by the employer) prior to January 1, 1987, shall be fitted with roll-over protective structures no later than January 1, 1988. Machines manufactured before July 1, 1969: Reserved pending further study, development, and review.

(e) Roll-over protective structures and supporting attachment shall meet the minimum performance criteria detailed in subsections (2) and (3) of this section, as applicable or shall be designed, fabricated, and installed in a manner which will support, based on the ultimate strength of the metal, at least two (2) times the weight of the prime mover applied at the point of impact.

(f) The design objective shall be to minimize the likelihood of a complete overturn and thereby minimize the possibility of the operator being crushed as a result of a roll-over or upset.

(g) The design shall provide a verticle clearance of at least fifty-two (52) inches from the work deck to the ROPS at the point of ingress or egress.

(h) Remounting. ROPS removed for any reason, shall be remounted with equal quality, or better, bolts or welding as required for the original mounting.

(i) Labeling. Each ROPS shall have the following information permanently affixed to the structure:

1. Manufacturer or fabricator's name and address;

2. ROPS model number, if any;

3. Machine make, model, or series number that the structure is designed to fit.

(j) Machines meeting certain existing governmental requirements. Any machine in use, equipped with roll-over protective structures, shall be deemed in compliance with this

subsection if it meets the roll-over protective structure requirements of the state of California, the U.S. Army Corps of Engineers, or the Bureau of Reclamation of the U.S. Department of the Interior in effect on April 5, 1972. The requirements in effect are:

1. State of California: Construction Safety Orders, issued by the Department of Industrial Relations pursuant to Division 5, Labor Code, §6312, state of California.

2. U.S. Army Corps of Engineers: General Safety Requirements, EM-385-1-1 (March 1967).

3. Bureau of Reclamation, U.S. Department of the Interior: Safety and Health Regulations for Construction. Part II (September 1971).

(2) Minimum performance criteria for roll-over protective structures for designated scrapers, loaders, dozers, graders, and crawler tractors.

(a) General. This section prescribes minimum, performance criteria for roll-over protective structures (ROPS) for rubber-tired self-propelled scrapers; rubber-tired front-end loaders and rubber-tired dozers; crawler tractors, crawler-type loaders, and motor graders. The vehicle and ROPS as a system shall have the structural characteristics prescribed in paragraph (f) of this subsection for each type of machine described in this paragraph.

(b) The static laboratory test prescribed herein will determine the adequacy of the structures used to protect the operator under the following conditions:

1. For rubber-tired self-propelled scrapers, rubber-tired front-end loaders, and rubber-tired dozers: Operating between zero (0) and ten (10) miles per hour over hard clay were roll-over would be limited to a maximum roll angle of 360 degrees down a slope of thirty (30) degrees maximum.

2. For motor graders: Operating between zero (0) and ten (10) miles per hour over hard clay where roll-over would be limited to 360 degrees down a slope of thirty (30) degrees maximum.

3. For crawler tractors and crawler-type loaders: Operating between zero (0) and ten (10) miles per hour over hard clay where roll-over would be limited to a maximum roll angle of 360 degrees down a slope of forty-five (45) degrees.

(c) Facilities and apparatus.

1. The following material is necessary:

a. Material, equipment, and tiedown means adequate to insure that the ROPS and its vehicle frame absorb the applied energy.

b. Equipment necessary to measure and apply loads to the ROPS. Adequate means to measure deflections and lengths should also be provided.

c. Recommended, but not mandatory, types of test setups are illustrated in Figure W-1 for all types of equipment to which this section applies; and in Figure W-2 for rubber-tired self-propelled scrapers; Figure W-3 for rubber-tired front-end loaders, rubber-tired dozers, and motor graders; and Figure W-4 for crawler tractors and crawler-type loaders.

2. Table W-1 contains a listing of the required apparatus for all types of equipment described in paragraph (a) of this subsection.

TABLE W-1

Means to Measure	Accuracy
Deflection of ROPS, inches	±5% of deflection measured.
Vehicle weight, pounds	±5% of the weight measured.
Force applied to frame pounds	±5% of force measured.
Dimensions of critical zone	±0.5 inches.

(d) Vehicle conditions. The ROPS to be tested must be attached to the vehicle structure in the same manner as it will be attached during vehicle use. A totally assembled vehicle is not required. However, the vehicle structure and frame which support the ROPS must represent the actual vehicle installation. All normally detachable windows, panels, or nonstructural fittings shall be removed so that they do not contribute to the strength of the ROPS.

(e) Test procedure. The test procedure shall include the following, in the sequence indicated:

1. Energy absorbing capabilities of ROPS shall be verified when loaded laterally by incrementally applying a distributed load to the longitudinal outside top member of the ROPS, as shown in Figure W-1, W-2, or W-3, as applicable. The distributed load must be applied so as to result in approximately uniform deflection of the ROPS. The load increments should correspond with approximately five-tenths (0.5) inches ROPS deflection increment in the direction of the load application, measured at the ROPS top edge. Should the operator's seat be off-center, the load shall be applied on the off-center side. For each applied load increment, the total load (lb.) versus corresponding deflection (in.) shall be plotted, and the area under the load-deflection curve shall be calculated. This area is equal to the energy (in.-lb.) absorbed by the ROPS. For a typical load-deflection curve and calculation method, see Figure W-5. In Figure W-1, incremental loading shall be continued until the ROPS has absorbed the amount of energy and the minimum applied load specified under paragraph (f) of this subsection has been reached or surpassed. (See Figures for this section following the regulation.)

2. To cover the possibility of the vehicle coming to rest on its top, the support capability shall be verified by applying a distributed vertical load to the top of the ROPS so as to result in approximately uniform deflection (see Figure W-1). The load magnitude is specified in paragraph (f)2a of this subsection.

3. The low temperature impact strength of the material used in the ROPS shall be verified by suitable material tests or material certification (see paragraph (f)2d of this subsection).

(f) Performance requirements.

1. General performance requirements.

a. No repairs or straightening of any member shall be carried out between each prescribed test.

b. During each test, no part of the ROPS shall enter the critical zone as detailed in SAE J397b, Society of Automotive Engineers Handbook, 1986. Deformation of the ROPS shall not allow the plane of the ground to enter this zone.

2. Specific performance requirements.

a. The energy requirement for purposes of meeting the requirements of paragraph (e)1 of this subsection is to be determined by referring to the plot of the energy versus weight of vehicle (see Figure W-6 for rubber-tired self-propelled scrapers; Figure W-7 for rubber-tired front-end loaders and rubber-tired dozers; Figure W-8 for crawler tractors and crawler-type loaders; and Figure W-9 for motor graders). For purposes of this subsection, force and weight are measured as pounds (lb.); energy (U) is measured as inch-pounds.

b. The applied load must attain at least a value which is determined by multiplying the vehicle weight by the corresponding factor shown in Figure W-10 for rubber-tired self-propelled scrapers; in Figure W-11 for rubber-tired front-end loaders and rubber-tired dozers; in Figure W-12 for crawler tractors and crawler-type loaders; and in Figure W-13 for motor graders.

c. The load magnitude for purposes of compliance with paragraph (e)2 of this subsection is equal to the vehicle weight. The test of load magnitude shall only be made after the requirements of subparagraph 2a of this paragraph are met.

d. Material used in the ROPS must have the capability of performing at zero degrees Fahrenheit, or exhibit Charpy V notch impact strength of eight (8) foot-pounds at minus twenty (20) degrees Fahrenheit. This is a standard Charpy specimen as described in American Society of Testing and Materials A 370, Methods and Definitions for Mechanical Testing of Steel Products (available at the Central Office of the Kentucky Occupational Safety and Health Program). The purpose of this requirement is to reduce the tendency of brittle fracture associated with dynamic loading, low temperature operation, and stress raisers which cannot be entirely avoided on welded structures.

(g) Definitions. For purposes of this subsection, "vehicle weight" means the manufacturer's maximum weight of the prime mover for rubber-tired self-propelled scrapers. For other types of equipment to which this subsection applies, "vehicle weight" means the manufacturer's maximum recommended weight of the vehicle plus the heaviest attachment.

(h) Source of standard. This standard is derived from, and restates, the following Society of Automotive Engineers Recommended Practices: SAE J1349, Society of Automotive Engineers Handbook, 1986, Minimum Performance Criteria for Roll-over Protective Structure for Rubber-Tired, Self-Propelled Scrapers; SAE J394, Society of Automotive Engineers Handbook, 1986, Minimum Performance Criteria for Roll-over Protective Structure for Rubber-Tired Front-End Loaders and Rubber-Tired Dozers; SAE J395, Society of Automotive Engineers Handbook, 1986, Minimum Performance Criteria for Roll-over Protective Structure for Crawler Tractors and Crawler-Type Loaders; and SAE J396, Society of Automotive Engineers handbook, 1986, Minimum Performance Criteria for Roll-over Protective Structures for Motor Graders. These recommended practices shall be resorted to in the event that questions of interpretation arise. The recommended practices appear in the 1986 SAE Handbook, which may be examined in the Central Office of the Kentucky Occupational Safety and Health Program.

(3) Protective frame (ROPS) test procedures and performance requirements for wheel-type agricultural and industrial tractors used in construction.

(a) General.

1. The purpose of this section is to set forth requirements for frames for the protection of operators of wheel type agricultural and industrial tractors to minimize the possibility of operator injury resulting from accidental upsets during normal operation. With respect to agricultural and industrial tractors, the provisions of subsections (2) and (4) of this section for rubber-tired dozers and rubber-tired loaders may be utilized in lieu of the requirements of this section.

2. The protective frame which is the subject of this standard is a structure mounted to the tractor that extends above the operator's seat and conforms generally to Figure W-14.

3. If an overhead weather shield is attached to the protective frame, it may be in place during tests: Provided, that it does not contribute to the strength of the protective frame. If such an overhead weather shield is attached, it must meet the requirements of paragraph (i) of this subsection.

4. For overhead protection requirements, see subsection (4) of this section.

5. If protective enclosures are used on wheel-type agricultural and industrial tractors, they shall meet the requirements of Society of Automotive Engineers Standard J1249, Society of Automotive Engineers Handbook, 1986, Protective Enclosures, Test Procedures, and Performance Requirements. This standard appears in the 1986 SAE Handbook and may be examined in the Central office of the Kentucky Occupational Safety and Health Program.

(b) Applicability. The requirements of this subsection apply to wheel-type agricultural tractors used in general industry work and to wheel-type industrial tractors used in general industry work. See paragraph (j) of this subsection for definitions of agricultural tractors and industrial tractors.

(c) Performance requirements.

1. Either a laboratory test or a field test is required in order to determine the performance requirements set forth in this paragraph.

2. A laboratory test may be either static or dynamic. The laboratory test must be under conditions of repeatable and controlled loading in order to permit analysis of the protective frame.

3. A field upset test, if used, shall be conducted under reasonably controlled conditions, both rearward and sideways to verify the effectiveness of the protective frame under actual dynamic conditions.

(d) Test procedures-general.

1. The tractor used shall be the tractor with the greatest weight on which the protective frame is to be used.

2. A new protective frame and mounting connections of the same design shall be used for each test procedure.

3. Instantaneous and permanent frame deformation shall be measured and recorded for each segment of the test.

4. Dimensions relative to the seat shall be determined with the seat unloaded and adjusted to its highest and most rearward latched position provided for a seated operator.

5. If the seat is offset, the frame loading shall be on the side with the least space between the centerline of the seat and the upright.

6. The low temperature impact strength of the material used in the protective structure shall be verified by suitable material tests or material certifications in accordance with subsection (2)(f)2d of this section.

(e) Test procedure for vehicle overturn.

1. Vehicle weight. The weight of the tractor, for purposes of ths subsection, includes the protective frame, all fuels, and other components required for normal use of the tractor. Ballast must be added if necessary to achieve a minimum total weight of 130 lbs. (59 kg.) per maximum power takeoff horsepower at rated engine speed. The weight of the front end must be at least thirty-three (33) lb. (15 kg.) per maximum power takeoff horsepower. In case power takeoff horsepower is unavailable, ninety-five (95) percent of net engine flywheel horsepower shall be used.

2. Agricultural tractors shall be tested at the weight set forth in subparagraph 1 of this paragraph.

3. Industrial tractors shall be tested with items of integral or mounted equipment and ballast that are sold as standard equipment or approved by the vehicle manufacturer for use with the vehicle where the protective frame is expected to provide protection for the operator with such equipment installed. The total vehicle weight and front end weight as tested shall not be less than the weights established in subparagraph 1 of this paragraph.

4. The test shall be conducted on a dry, firm soil bank as illustrated in Figure W-15. The soil in the impact area shall have an average cone index in the 0-6 inch (153 mm.) layer not less than 150 according to American Society of Agricultural Engineers Recommendation ASAE R313, Soil Cone Penetrometer (available in the Central Office of the Kentucky Occupational Safety and Health Program). The path of travel of the vehicle shall be 12°+2° to the top edge of the bank.

5. The upper edge of the bank shall be equipped with an eighteen (18) inch (457 mm.) high ramp as described in Figure W-15 to assist in tipping the vehicle.

6. The front and rear wheel tread settings, where adjustable, shall be at the position nearest to halfway between the minimum and maximum settings obtainable on the vehicle. Where only two (2) settings are obtainable, the minimum setting shall be used.

7. Vehicle overturn test-sideways and rearward.

a. The tractor shall be driven under its own power along the specified path of travel at a minimum speed of ten (10) m.p.h. (16 km./hr.) or maximum vehicle speed if under ten (10) m.p.h. (16 km./hr.) up the ramp as described in subparagraph 5 of this paragraph to induce sideways overturn.

b. Rear upset shall be induced by engine power with the tractor operating in gear to obtain 3-5 m.p.h. (4.8-8 km./hr.) at maximum governed engine r.p.m. preferably by driving forward directly up a minimum slope of two (2) vertical to one (1) horizontal. The engine clutch may be used to aid in inducing the upset.

(f) Other test procedures. When the field upset test is not used to determine ROPS performance, either the static test or the dynamic test, contained in paragraph (g) or (h) of this subsection, shall be made.

(g) Static test.

1. Test conditions.

a. The laboratory mounting base shall include that part of the tractor chassis to which the protective frame is attached including the mounting parts.

b. The protective frame shall be instrumented with the necessary equipment to obtain the required load deflection data at the location and directions specified in Figures W-16, W-17, and W-18.

c. The protective frame and mounting connections shall be instrumented with the necessary recording equipment to obtain the required load-deflection data to be used in calculating FSB (see paragraph (j)3 of this subsection). The gauges shall be placed on mounting connections before the installation load is applied.

2. Test procedure.

a. The side load application shall be at the upper extremity of the frame upright at a ninety (90) degree angle to the centerline of the vehicle. This side load "L" shall be applied according to Figure W-16. "L" and "D" shall be recorded simultaneously. The test shall be stopped when:

(i) The strain energy absorbed by the frame is equal to the required input energy (E_{is}); or

(ii) Deflection of the frame exceeds the allowable deflection; or

(iii) The frame load limit occurs before the allowable deflection is reached in the side load.

b. The L-D diagram, as shown by means of a typical example in Figure W-19, shall be constructed, using the data obtained in accordance with clause a of this subparagraph.

c. The modified L_m-D_m diagram shall be constructed according to clause (ii) of this subparagraph and according to figure W-20, the strain energy absorbed by the frame (E_u) shall then be determined.

d. E_{is}, FER, and FSB shall be calculated.

e. The test procedure shall be repeated on the same frame utilizing L (rear input; see Figure W-18) and E_{ir} Rear load application shall be uniformly distributed along a maximum projected dimension of twenty-seven (27) inches (686 mm.) and a maximum area of 160 square inches (1,032 sq. cm.) normal to the direction of load application. The load shall be applied to the upper extremity of the frame at the point which is midway between the centerline of the seat and the inside of the frame upright.

(h) Dynamic test.

1. Test conditions.

a. The protective frame and tractor shall meet the requirements of paragraph (e)2 or 3 of this subsection, as appropriate.

b. The dynamic loading shall be produced by use of a 4,410 lb. (2,000 kg.) weight acting as a pendulum. The impact face of the weight shall be twenty-seven (27) plus, or minus one (1) inch by twenty-seven (27) plus or minus one (1) inch (686 + or - 25 mm.) and shall be constructed so that its center of gravity is within one (1) inch (25.4 mm.) of its geometric center. The weight shall be suspended from a pivot point 18-22 feet (5.5-6.7 m.) above the point of impact on the frame and shall be conveniently and safely adjustable for height. (See Figure

W-21).

c. For each phase of testing, the tractor shall be restrained from moving when the dynamic load is applied. The restraining members shall be of 0.5-0.63 inch (12.5-16 mm.) steel cable and points of attaching restraining members shall be located an appropriate distance behind the rear axle and in front of the front axle to provide a 15°-30° angle between a restraining cable and the horizontal. The restraining member shall either be in the plane in which the center gravity of the pendulum will swing or more than one (1) restraining cable shall give a resultant force in this plane. (See Figure W-22).

d. The wheel tread setting shall comply with the requirements of paragraph (e)6 of this subsection. The tires shall have no liquid ballast and shall be inflated to the maximum operating pressure recommended by the tire manufacturer. With specified tire inflation, the restraining cables shall be tightened to provide tire deflection of 6-8 percent of nominal tire section width. After the vehicle is properly restrained, a wooden beam 6 x 6 in. (15 x 15 cm.) shall be driven tightly against the appropriate wheels and clamped. For the test to the side, an additional wooden beam shall be placed as a prop against the wheel nearest the operator's station and shall be secured to the floor so that it is held tightly against the wheel rim during impact. The length of this beam shall be chosen so that when it is positioned against the wheel rim, it is at an angle of 25°-40° to the horizontal. It shall have a length 20-25 times its depth and a width two (2) to three (3) times its depth. (See Figures W-22 and W-23.)

e. Means shall be provided indicating the maximum instantaneous deflection along the line of impact. A simple friction device is illustrated in Figure W-23.

f. No repair or adjustments may be carried out during the test.

g. If any cables, props, or blocking shift or break during the test, the test shall be repeated.

2. Test procedure.

a. General. The frame shall be evaluated by imposing dynamic loading to rear followed by a load to the side on the same frame. The pendulum dropped from the height (see definition "H" in paragraph (j)3 of this subsection) imposes the dynamic load. The position of the pendulum shall be so selected that the initial point of impact on the frame shall be in line with the arc of travel of the center of gravity of the pendulum. A quick release mechanism should be used but, if used, shall not influence the attitude of the block.

b. Impact at rear. The tractor shall be properly restrained according to subparagraphs 1c and d of this paragraph. The tractor shall be positioned with respect to the pivot point of the pendulum such that the pendulum is twenty (20) degress from the vertical prior to impact, as shown in Figure W-22. The impact shall be applied to the upper extremity of the frame at the point which is midway between the centerline of the seat and the inside of the frame upright of a new frame.

c. Impact at side. The block and restraining shall conform to subparagraphs 1c and d of this paragraph. The point of impact shall be that structural member of the protective frame likely to hit the ground first in a sideways accidental upset. The side impact shall be applied to the side opposite that used for rear impact.

(i) Performance requirements.

1. General.

a. The frame, overhead weather shield, fenders, or other parts in the operator area may be deformed but shall not shatter or leave sharp edges exposed to the operator, or violate dimensions as shown in Figures W-16 and W-17 as follows:

D = 2 in. (51 mm.) inside of frame upright to vertical centerline of seat.
E = 30 in. (762 mm.).
F = Not less than 0 in. and not more than 12 in. (305 mm.), measured at centerline front of seat backrest to crossbar along the line of load application as shown in Figure W-17.
G = 24 in. (610 mm.).

b. The material and design combination used in the protective structure must be such that the structure can meet all prescribed performance tests at zero degrees Fahrenheit in accordance with subsection (2)(f)2d.

2. Vehicle overturn performance requirements. The requirements of this paragraph must be met in both side and rear overturns.

3. Static test performance requirements. Design factors shall be incorporated in each design to withstand an overturn test as prescribed in this paragraph. The structural requirements will be generally met if FER is greater than one (1) and FSB is greater than K-1 in both side and rear loadings.

4. Dynamic test performance requirements. Design factors shall be incorporated in each design to withstand the overturn test prescribed in this paragraph. The structural requirements will be generally met if the dimensions in this paragraph are adhered to in both side and rear loads.

(j) Definitions applicable to this section.

1. SAE J1194, Society of Automotive Engineers Handbook, 1986, Operator Protection for Wheel-Type Agricultural and Industrial Tractors (1983) defines "agricultural tractor" as a "wheel-type vehicle of more than 20 engine horsepower designed to furnish the power to pull, carry, propel, or drive implements that are designed for agricultural usage." Since this subsection applies only to general industry work, the following definition of "agricultural tractor" is adopted for purposes of this regulation: "Agricultural tractor" means a wheel-type vehicle of more than twenty (20) engine horsepower, used in general industry work, which is designed to furnish the power to pull, propel, or drive implements.

2. "Industrial tractor" means that class of wheeled-type tractor of more than twenty (20) engine horsepower (other than rubber-tired loaders and dozers described in subsection (2) of this section) used in operations such as landscaping, loading, digging, grounds keeping, and highway maintenance.

3. The following symbols, terms, and explanations apply to this section:

E_{LS} = Energy input to be absorbed during side loading. E'_{LS} = 723 + 0.4 W ft.-lb. (E'_{LS} = 100 + 0.12W', m.-kg.).
E_{LR} = Energy input to be absorbed during rear

loading. E_{ir} = 0.47 W ft.-lb. (E'_{ir} = 0.14 W', m.-kg.).

W = Tractor weight as prescribed in subsection (3)(e)1 and (e)3, in lb. (W', kg.). L = Static load, lb. (kg.).

D = Deflection under L, in. (mm.).

L-D = Static load-deflection diagram.

L_mD_m = Modified static load-deflection diagram (Figure W-20). To account for increase in strength due to increase in strain rate, raise L in plastic range to L x K.

K = increase in yield strength induced by higher rate of loading (1.3 for hot rolled low carbon steel 1010-1030). Low carbon is preferable; however, if higher carbon or other material is used, K must be determined in the laboratory. Refer to Charles H. Norris, et al., Structural Design for Dynamic Loads (1959), p. 3.

L_{max} = Maximum observed static load.

Load Limit = Point on L-D curve where observed static load is 0.8 L_{max} (refer to Figure W-19).

E_u = Strain energy absorbed by the frame, ft.-lb. (m.-kg.) area under L_mD_m curve.

FER = Factor of energy ratio, FER = E_u/E_{is} also = E_u/E_{ir}

P_b = Maximum observed force in mounting connection under static load, L, lb. (kg.).

FSB = Design margin for mounting connection FSB = $(P_u/P_b)-1$.

H = Vertical height of lift of 4,410 lb. (2,000 kg.) weight, in. (H', mm.). The weight shall be pulled back so that the height of its center of gravity above the point of impact is defined as follows: H = 4.92 + 0.00190 W or (H' = 125 + 0.107 W') (Figure W-24).

(k) Source of standard. The standard in this section is derived from, and restates, Society of Automotive Engineers Standard J1194, Society of Automotive Engineers Handbook, 1986, Protective Frame Test Procedures and Performance Requirements. This standard shall be resorted to in the event that questions of interpretation arise. The standard appears in the 1986 SAE Handbook, which may be examined in the Central Office of the Kentucky Occupational Safety and Health Program.

(4) Overhead protection for operators of agricultural and industrial tractors.

(a) General.

1. Purpose. When overhead protection is provided on wheel-type agricultural and industrial tractors, the overhead protection shall be designed and installed according to the requirements contained in this subsection. The provisions of subsection (2) of this section for rubber-tired dozers and rubber-tired loaders may be used in lieu of the standards contained in this subsection. The purpose of the standard is to minimize the possibility of operator injury resulting from overhead hazards such as flying and falling objects, and at the same time to minimize the possibility of operator injury from the cover itself in the event of accidental upset.

2. Applicability. This standard applies to wheel-type agricultural tractors used in general industry work and to wheel-type industrial tractors used in general industry work.

(b) Overhead protection. When overhead protection is installed on wheel-type agricultural or industrial tractors used in general industry work, it shall meet the requirements of this paragraph. The overhead protection may be constructed of a solid material. If grid or mesh is used, the largest permissible opening shall be such that the maximum circle which can be inscribed between the elements of the grid or mesh is 1.5 in. (38 mm.) in diameter. The overhead protection shall not be installed in such a way as to become a hazard in the case of upset.

(c) Test procedures - general.

1. The requirements of subsection (3)(d), (e), and (f) of this section shall be met.

2. Static and dynamic rear load application shall be uniformly distributed along a maximum projected dimension of 27 in. (686 mm.) and a maximum area of 160 inch^2 (1,032 cm.^{2}) normal to the direction of load application. The load shall be applied to the upper extremity of the frame at the point which is midway between the centerline of the seat and the inside of the frame upright.

3. The static and dynamic side load application shall be uniformly distributed along a maximum projected dimension of 27 in. (686 mm.) and a maximum area of 160 in.^{2} (1,032 cm.^{2}) normal to the direction of load application. The direction of load application is the same as in subsection (3)(g) and (h) of this section. To simulate the characteristics of the structure during an upset, the center of load application may be located from a point 24 in. (610 mm.) (K) forward to 12 in. (305 mm.) (L) rearward of the front of the seat backrest to best utilize the structural strength. See Figure W-25.

(d) Drop test procedures.

1. The same frame shall be subjected to the drop test following either the static or dynamic test.

2. A solid steel sphere or material of equivalent spherical dimension weighing 100 lb. (45.4 kg.) shall be dropped once from a height 10 ft. (3,048 mm.) above the overhead cover.

3. The point of impact shall be on the overhead cover at a point within the zone of protection as shown in Figure W-26, which is furthest removed from major structural members.

(e) Crush test procedures.

1. The same frame shall be subjected to the crush test following the drop test and static or dynamic test.

2. The test load shall be applied as shown in Figure W-27 with the seat positioned as specified in subsection (3)(d)4 of this section. Loading cylinders shall be pivotally mounted at both ends. Loads applied by each cylinder shall be equal within two (2) percent, and the sum of the loads of the two (2) cylinders shall be two (2) times the tractor weight as set forth in subsection (3)(e)1 of this section. The maximum width of the beam illustrated in Figure W-27 shall be 6 in. (152 mm.).

(f) Performance requirements.

1. General. The performance requirements set forth in subsection (3)(i)2, 3, and 4 of this section shall be met.

2. Drop test performance requirements.

a. Instantaneous deformation due to impact of the sphere shall not enter the protected zone as illustrated in Figure W-25, W-26, and W-28.

b. In addition to the dimensions set forth in subsection (3)(i)1a of this section, the following dimensions apply to Figure W-28:

H = 17.5 in. (444 mm.).

J = 2 in. (50.8 mm.) measured from the outer periphery of the steering wheel.

3. Crush test performance requirements. The protected zone as described in Figure W-28 must not be violated.

(g) Source of standard. This standard is derived from, and restates, the portions of Society of Automotive Engineers Standard J167, Society of Automotive Engineers Handbook, 1986, which pertain to overhead protection requirements. The full title of the SAE standard is: Protective Frame with Overhead Protection-Test Procedures and Performance Requirements. The SAE standard shall be resorted to in the event that questions of interpretation arise. The SAE standard appears in the 1986 SAE Handbook, which may be examined in the Central Office of the Kentucky Occupational Safety and Health Program.

(See Figures following
Regulatory Impact Analysis)

JOHN CALHOUN WELLS, Chairman
APPROVED BY AGENCY: June 4, 1986
FILED WITH LRC: June 13, 1986 at 11 a.m.

PUBLIC HEARING SCHEDULED: A public hearing concerning these regulations has been scheduled for July 25, 1986 at 1 p.m. (EST), to be held at the Kentucky Labor Cabinet, U.S. 127 Building South, Bay 2 Conference Room, Frankfort, Kentucky. Those interested in attending must provide by July 20, 1986, written notice to Mr. Guy Schoolfield, Kentucky Labor Cabinet, Division of Education and Training, OSH Assistance Branch, U.S. 127 Building South, Frankfort, Kentucky 40601.

REGULATORY IMPACT ANALYSIS

Agency Contact Person: Guy Schoolfield

(1) Type and number of entities affected: These amendments will affect those general industry workplaces which use off-road vehicles such as front-end loaders, scrapers, bulldozers, off-highway trucks, graders, and similar equipment in non-construction related activities.

(a) Direct and indirect costs or savings to those affected: No costs or savings will be incurred by the affected establishments as a result of these amendments as these types of vehicles are manufactured complying with these regulations.

1. First year:
2. Continuing costs or savings:
3. Additional factors increasing or decreasing costs (note any effects upon competition):

(b) Reporting and paperwork requirements: No additional reports or records are required by these amendments.

(2) Effects on the promulgating administrative body:

(a) Direct and indirect costs or savings: No costs or savings to the Kentucky OSH Program will occur as a result of these amendments.

1. First year:
2. Continuing costs or savings:
3. Additional factors increasing or decreasing costs:

(b) Reporting and paperwork requirements: No additional reports or records are required by these amendments.

(3) Assessment of anticipated effect on state and local revenues: These amendments will have no effect on state and local revenues.

(4) Assessment of alternative methods; reasons why alternatives were rejected: N/A

(5) Identify any statute, administrative regulation or government policy which may be in conflict, overlapping, or duplication: No statutes, rules, regulations, or governmental policies conflict, overlap, or duplicate these amendments.

(a) Necessity of proposed regulation if in conflict:

(b) If in conflict, was effort made to harmonize the proposed administrative regulation with conflicting provisions:

(6) Any additional information or comments: None

Tiering:
Was tiering applied? No. The Occupational Safety and Health Program targets its scheduled inspections toward those industries or firms that pose higher risks to worker health and safety or from which the OSH Program has received worker complaints.

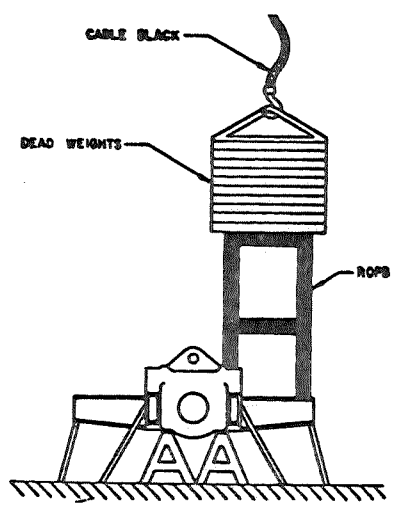

Figure W-1-Vertical loading setup for all types of equipment described in Subsection (2)(a) of this section.

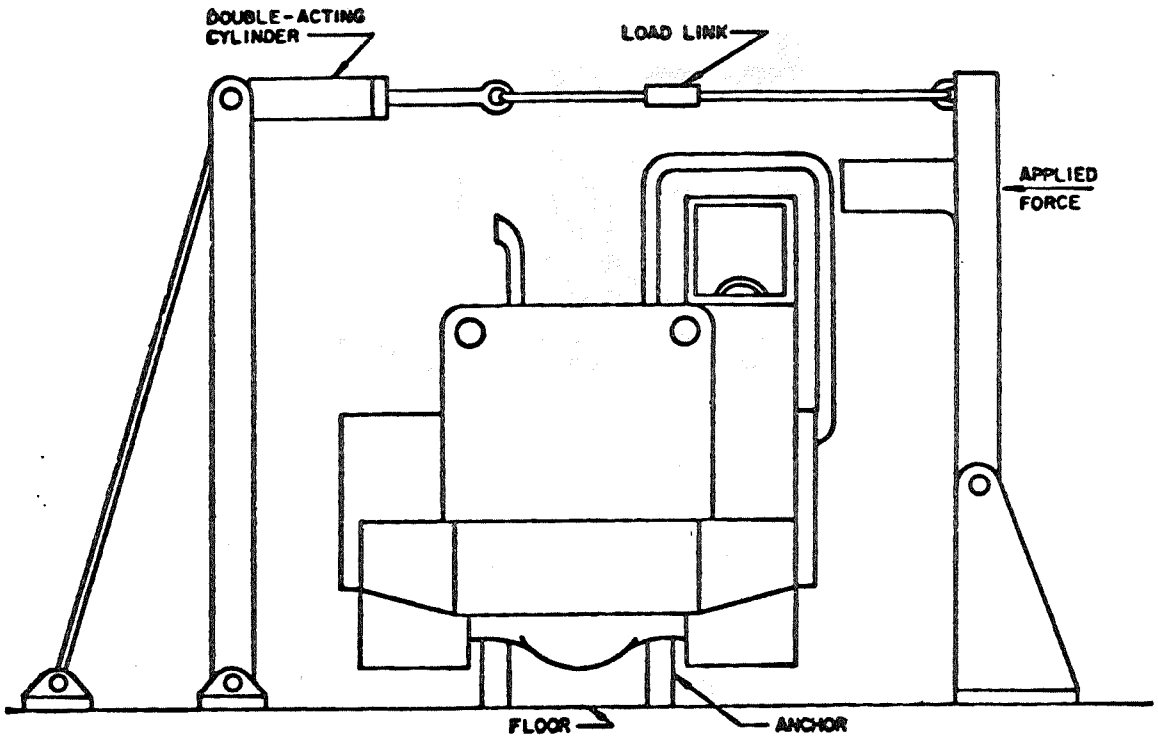

FIGURE W-2—Test setup for rubber-tired self-propelled scrapers.

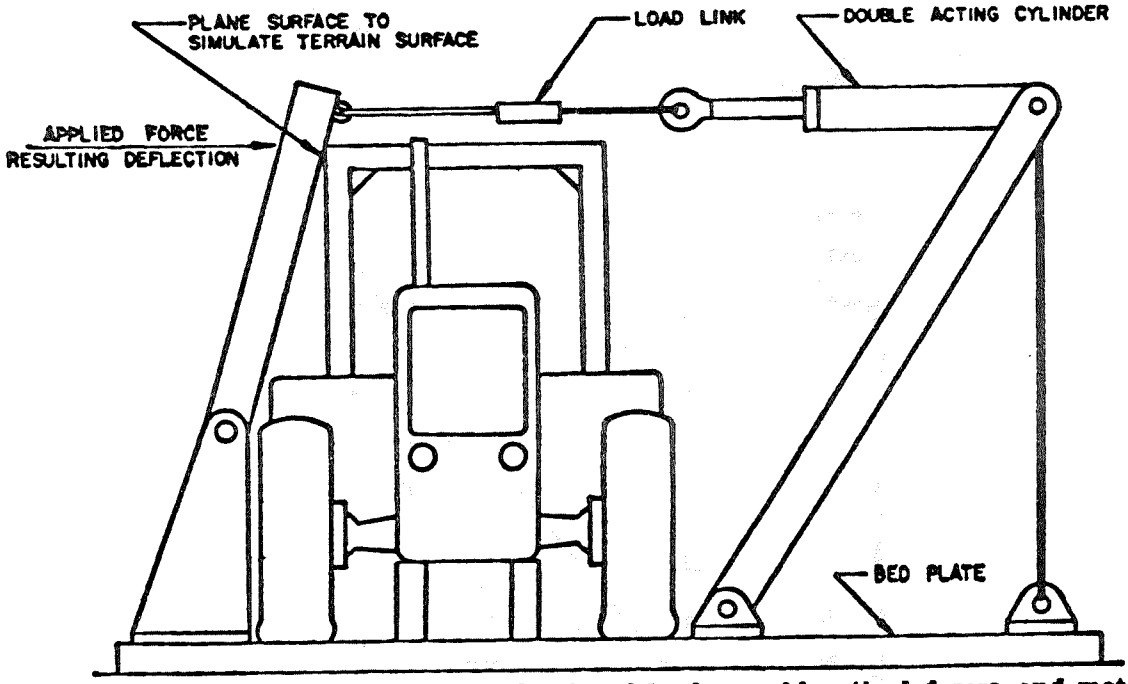

FIGURE W-3—Test setup for rubber-tired front-end loaders, rubber-tired dozers, and motor graders.

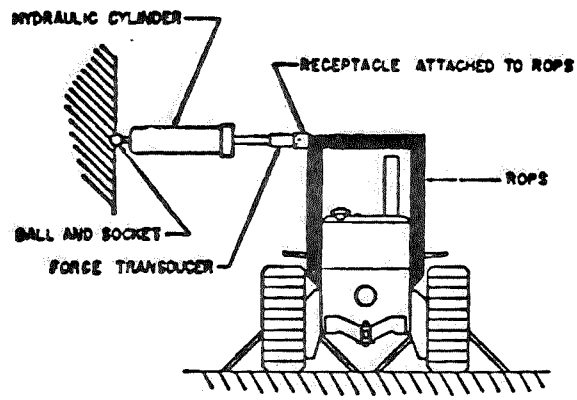

FIGURE W-4—Side-loading setup for crawler tractors and crawler loaders.

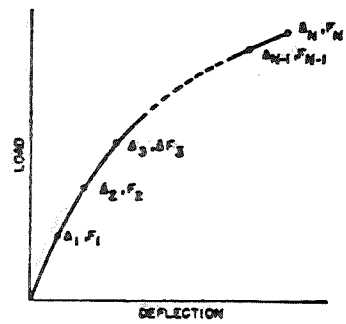

Δ - TOTAL DEFLECTION
F - FORCE APPLIED

$$\text{AREA} = \frac{\Delta_1 F_1}{2} + (\Delta_2 - \Delta_1)\frac{F_1 + F_2}{2} + (\Delta_3 - \Delta_2)\frac{F_2 + F_3}{2} + \cdots + (\Delta_N - \Delta_{N-1})\frac{F_{N-1} + F_N}{2}$$

FIGURE W-5-Determination of energy area under force deflection curve for all types of ROPS equipment defined in Subsection (2) of this section.

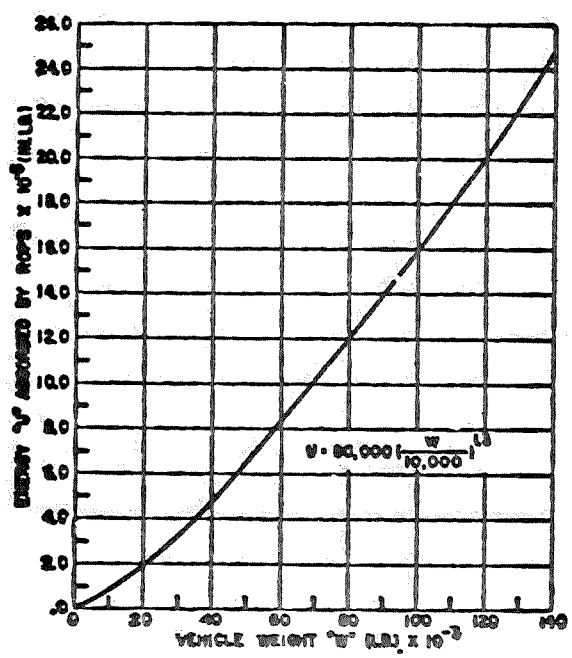

FIGURE W-6—Energy absorbed versus vehicle weight.

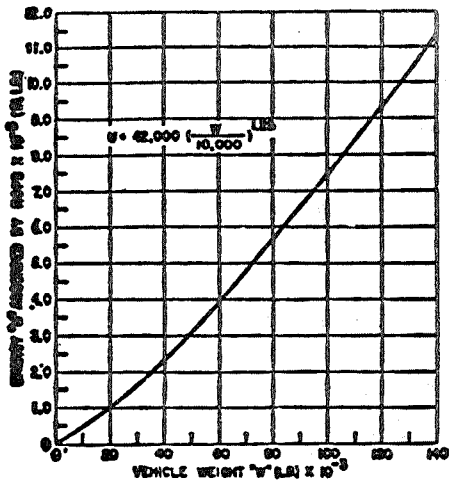

FIGURE W-7—Energy absorbed versus vehicle weight.

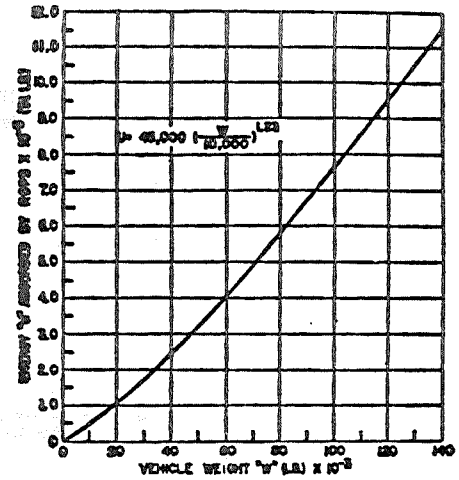

FIGURE W-8—Energy absorbed versus vehicle weight.

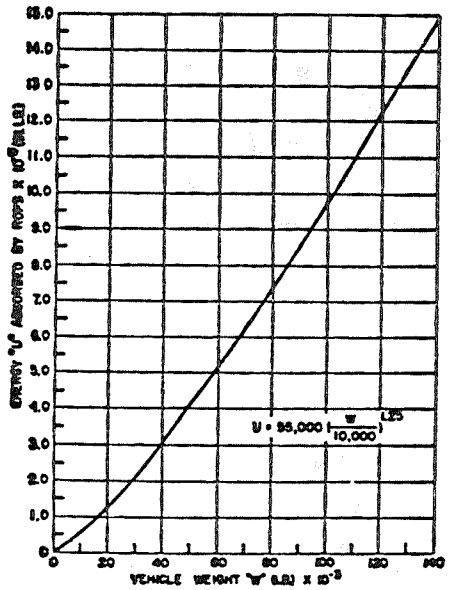

FIGURE W-9—Energy absorbed Versus Vehicle Weight.

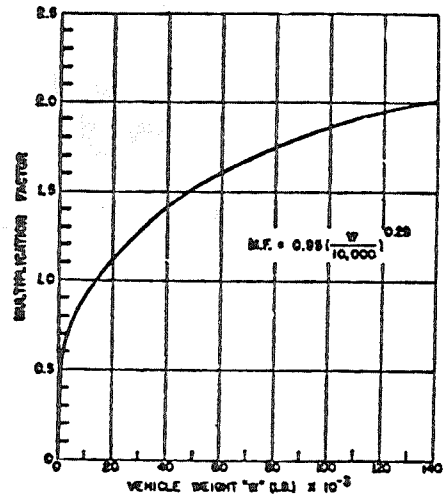

FIGURE W-10—Minimum horizontal load factor for self-propelled scrapers.

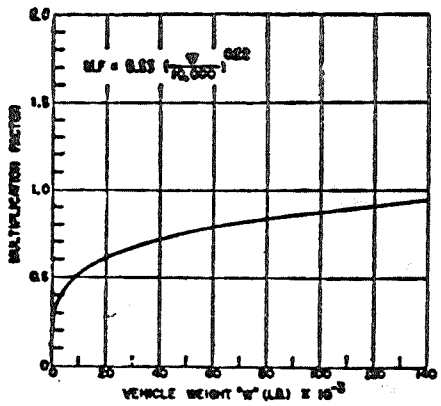

FIGURE W-11—Minimum horizontal load factor for rubber-tired loaders and dozers.

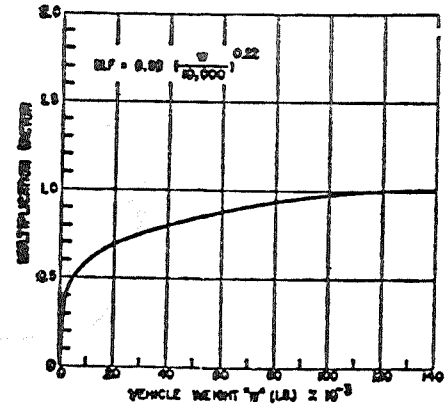

FIGURE W-12—Minimum horizontal load factor for crawler tractors and crawler-type loaders.

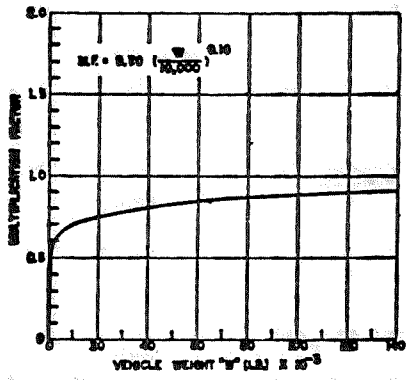

FIGURE W-13—Minimum horizontal load factor for motor graders.

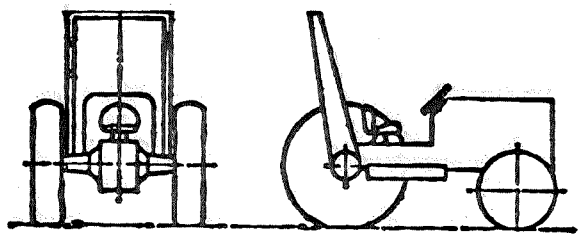

FIGURE W-14—Typical frame configuration.

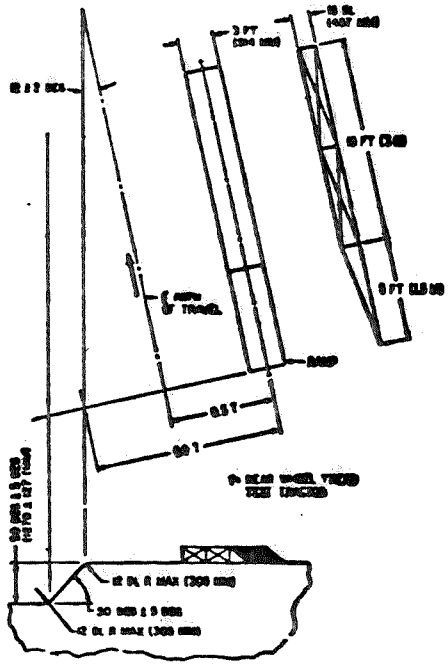

FIGURE W-15.

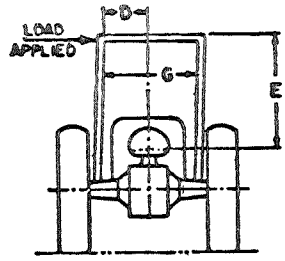

FIGURE W-16—Side load application.

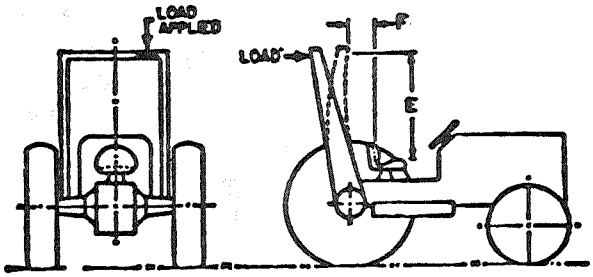

FIGURE W-17—Rear load application.

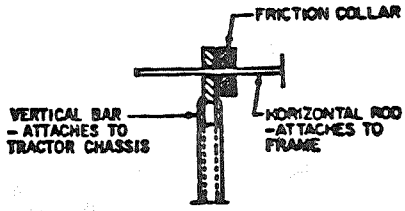

FIGURE W-18—Method of measuring instantaneous deflection.

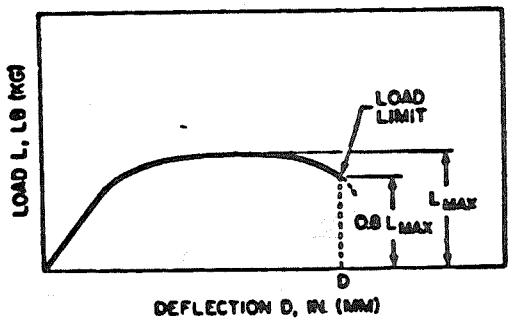

FIGURE W-19—Typical L-D diagram.

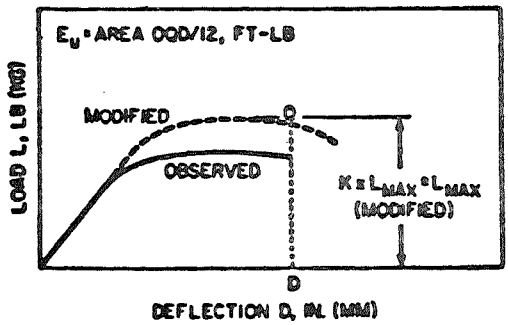

FIGURE W-20—Typical modified Lm—Dm diagram.

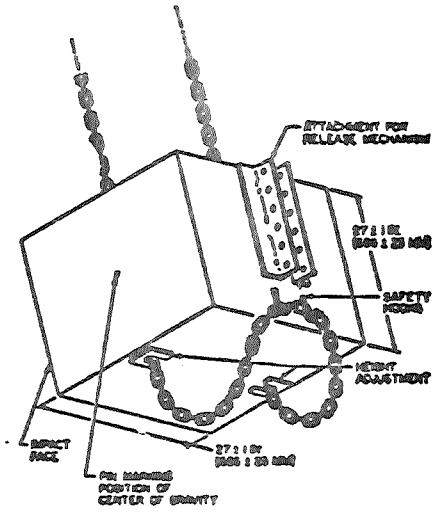

Figure W-21—Pendulum.

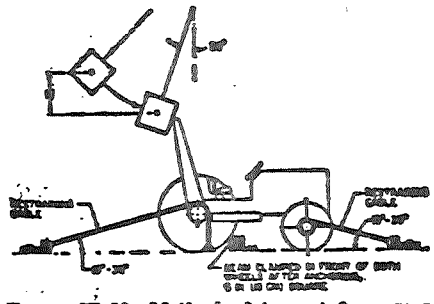

Figure W-22—Method of impact from rear.

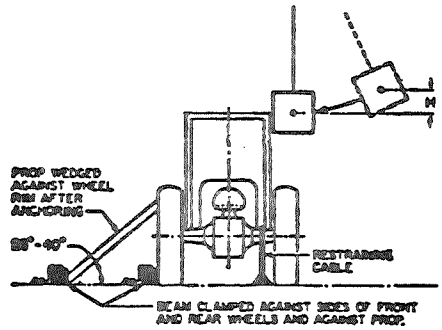

Figure W-23—Method of impact from side.

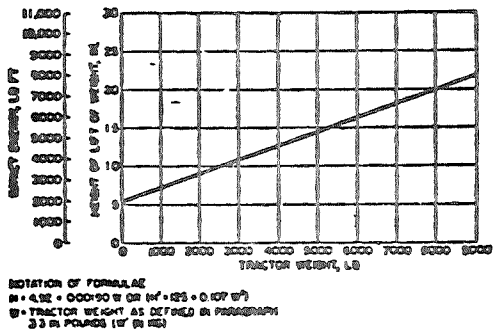

NOTATION OF FORMULAE

$H = 4.192 + 0.00190\,W$ OR $(H' = 12.5 + 0.107\,W')$

W = TRACTOR WEIGHT AS DEFINED IN PARAGRAPH 3.3 IN POUNDS (W' IN KG)

Figure W-24—Impact energy and corresponding lift height of 4,410 lb. (2,000 kg.) weight.

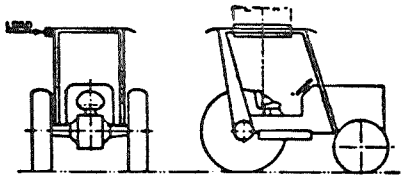

FIGURE W-25—Location for side load.

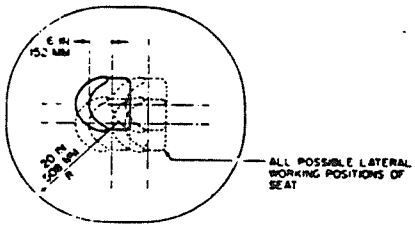

FIGURE W-26—Zone of protection for drop test.

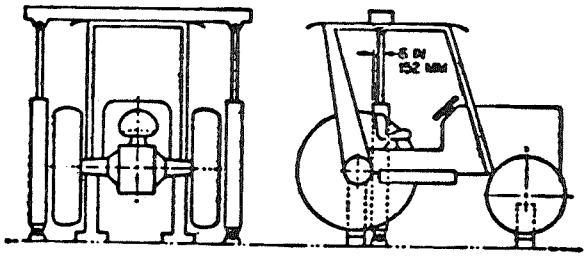

FIGURE W-27—Method of load application for crush test.

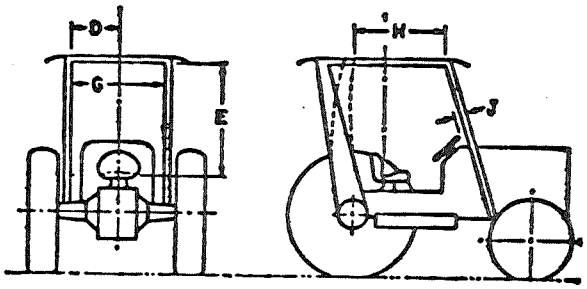

FIGURE W-28—Protected zone during crush and drop tests.

LABOR CABINET
Department of Workplace Standards
Kentucky Occupational Safety and Health
(Proposed Amendment)

803 KAR 2:020. Adoption of 29 CFR Part 1910.

RELATES TO: KRS Chapter 338
PURSUANT TO: KRS Chapter 338
NECESSITY AND FUNCTION: KRS 338.051 and 338.061 authorize the Kentucky Occupational Safety and Health Standards Board to adopt and promulgate occupational safety and health rules and regulations, and standards. Express authority to adopt by reference established federal standards and national consensus standards is also given to the board. The following regulation contains those standards to be enforced by the Division of Occupational Safety and Health Compliance in the area of general industry. The standards are arranged in numerical order in order to facilitate reference to 29 CFR 1910.

Section 1. The Occupational Safety and Health Standards Board hereby adopts Chapter 29, Part 1910 of the Code of Federal Regulations revised as of July 1, 1984, published by the Office of the Federal Register, National Archives and Records Services, General Services Administration. These standards are hereby adopted by reference with the following additions, exceptions, and deletions.

(1) 29 CFR Part 1910.1 shall read as follows:
"The provisions of this regulation adopt and extend the applicability of established federal standards contained in 29 CFR Part 1910 to all employers, employees, and places of employment throughout the Commonwealth except those excluded in KRS 338.021."

(2) 29 CFR Part 1910.2 shall read as follows: As used in this part, unless the context clearly requires otherwise:

(a) "Act" means KRS Chapter 338.

(b) "Assistant Secretary of Labor" means the Secretary of Labor, Commonwealth of Kentucky.

(c) "Employer" means any entity for whom a person is employed except those employers excluded in KRS 338.021.

(d) "Employee" means any person employed except those employees excluded in KRS 338.021.

(e) "Standard" means a standard which requires conditions or the adoption or use of one (1) or more practices, means, methods, operations, or processes, reasonably necessary or appropriate to provide safe and healthful employment. "Standard" has the same meaning as and includes the words "regulation" and "rule."

(f) "National Consensus Standard" means any occupational safety and health standard or modification thereof which has been adopted and promulgated by a nationally recognized standards-producing organization.

(g) "Established federal standard" means any operative occupational safety and health standard established by any agency of the United States Government.

(h) An employer, required under these standards to report information to the U.S. Department of Labor, or any subsidiary thereof, shall instead report such information to the Kentucky Labor Cabinet, U.S. 127 South, Frankfort, Kentucky 40601.

(3) 29 CFR 1910.19(f) "Special Provisions for Air Contaminants," is removed as published in the Federal Register, Volume 50, Number 240, December 13, 1985, is adopted by reference.

(4) [(3)] 29 CFR 1910.20 "Access to employee exposure and medical records" is amended as follows:

(a) 29 CFR 1910.20(e)(1)(i) is amended to read "Whenever an employee or designated representative requests access to an exposure or medical record, the employer shall assure that access is provided in a reasonable time, place, and manner, but no longer than fifteen (15) days after the request for access is made unless sufficient reason is given why such a time is unreasonable or impractical."

(b) 29 CFR 1910.20(e)(1)(ii) is amended to read "Whenever an employee or designated representative requests a copy of a record, the employer shall, except as specified in (v) of this section, within the period of time previously specified assure that either:"

(c) 29 CFR 1910.20(e)(1)(v) is added and shall read "Original x-ray film will be made available to the employee and/or designated representative for inspection, review, and duplication under the supervision of the employer or his representative. The employer is not required to bear the cost of duplication of x-ray film."

(d) 29 CFR 1910.20(g)(1) is amended to read "Upon an employee's first entering into employment, and at least annually thereafter, each employer shall inform each employee exposed to toxic substances or harmful physical agents of the following:"

(e) 29 CFR 1910.20(g)(2) is amended to read "Each employer shall make readily available to employees any informational materials concerning this standard which are provided to the employer by the Assistant Secretary of Labor for Occupational Safety and Health."

(5) [(4)] Subparagraph 29 CFR 1910.23(a)(7) shall be amended to read as follows: "Every temporary or permanent floor opening shall have standard railings, or shall be constantly attended by someone."

(6) [(5)] 29 CFR 1910.95 "Hearing Conservation Program" is amended as follows:

(a) 29 CFR 1910.95(h)(1) shall read: Audiometric tests shall be pure tone, air conduction, hearing threshold examinations with test frequencies including as a minimum 500, 1,000, 2,000, 3,000, 4,000, and 6,000 Hz. Testing at 8,000 Hz must be included in the audiometric tests for employers using audiometers with that capacity and all audiometric tests must include 8,000 Hz after January 15, 1985.

(b) 29 CFR 1910.95(h)(4) shall read: Audiometric examinations shall be administered in a room meeting the requirements listed in Appendix D: Audiometric Test Rooms. When an audiometric test room is located in a mobile test van, background sound pressure level measurements shall be taken at each testing location.

(c) 29 CFR 1910.95(h)(5)(ii) shall read: Audiometer calibration shall be checked acoustically at least annually in accordance with Appendix E: Acoustic Calibration of Audiometers. Test frequencies below 500 Hz and above 8,000 Hz (6,000 Hz until January 15, 1985 for audiometers without 8,000 Hz capability) may be omitted from this check. Deviations of fifteen (15) decibels or greater require an

exhaustive calibration.

(d) 29 CFR 1910.95(h)(5)(iii) shall read: An exhaustive calibration shall be performed at least every two (2) years in accordance with sections 4.1.2; 4.1.3; 4.1.4.3; 4.2; 4.4.1; 4.4.2; 4.4.3; and 4.5 of the American National Standard Specification for Audiometers, S3.6-1969. Test frequencies below 500 Hz and above 8,000 Hz (6,000 Hz until January 15, 1985 for audiometers without 8,000 Hz capability) may be omitted from this calibration.

(e) 29 CFR 1910.95(L)(1) shall read: The employer shall make available to affected employees or their representatives copies of this standard and shall also post a notice of the availability of this standard in the workplace.

(f) 29 CFR 1910.95(o) shall read: Paragraphs (c) through (n) of this section shall not apply to employers engaged in oil and gas well drilling and servicing operations, agriculture, or construction.

(g) 29 CFR 1910.95 Appendix E shall read: Acoustic Calibration of Audiometers.

This Appendix is Mandatory.

Audiometer calibration shall be checked acoustically, at least annually, according to the procedures described in this Appendix. The equipment necessary to perform these measurements is a sound level meter, octave-band filter set, and a National Bureau of Standards 9A coupler. In making these measurements, the accuracy of the calibrating equipment shall be sufficient to determine that the audiometer is within the tolerances permitted by American Standard Specification for Audiometers, S3.6-1969.

1. Sound Pressure Output Check.

a. Place the earphone coupler over the microphone of the sound level meter and place the earphone on the coupler.

b. Set the audiometer's hearing threshold level (HTL) dial to seventy (70) dB.

c. Measure the sound pressure level of the tones that each test frequency from 500 Hz through 8,000 Hz (6,000 Hz until January 15, 1985 for audiometers without 8,000 Hz capability) for each earphone.

d. At each frequency the readout on the sound level meter should correspond to the levels in Table E-1 or Table E-2, as appropriate, for the type of earphone, in the column entitled "sound level meter reading."

2. Linearity check.

a. With the earphone in place, set the frequency to 1,000 Hz and the HTL dial on the audiometer to seventy (70) dB.

b. Measure the sound levels in the coupler at each ten (10) dB decrement from seventy (70) dB to ten (10) dB, noting the sound level meter reading at each setting.

c. For each ten (10) dB decrement on the audiometer the sound level meter should indicate a corresponding ten (10) dB decrease.

d. This measurement may be made electrically with a voltmeter connected to the earphone terminals.

3. Tolerances.

When any of the measured sound levels deviate from the levels in Table E-1 or Table E-2 plus or minus three (3) dB at any test frequency between 500 and 3,000 Hz, four (4) dB at 4,000 Hz, or five (5) dB at 6,000 Hz and 8,000 Hz, an exhaustive calibration is advised. An exhaustive calibration is required if the deviations are greater than ten (10) dB at any test frequency.

TABLE E-1 - REFERENCE THRESHOLD LEVELS FOR TELEPHONICS-TDH-39 EARPHONES

Frequency, Hz	Reference threshold level for TDH-39 earphones, dB	Sound level meter reading dB
500	11.5	81.5
1000	7	77
2000	9	79
3000	10	80
4000	9.5	79.5
6000	15.5	85.5
8000	13.0	83.0

TABLE E-1 - REFERENCE THRESHOLD LEVELS FOR TELEPHONICS-TDH-39 EARPHONES

Frequency, Hz	Reference threshold level for TDH-49 earphones, dB	Sound level meter reading dB
500	13.5	83.5
1000	7.5	77.5
2000	11	81.0
3000	9.5	79.5
4000	10.5	80.5
6000	13.5	83.5
8000	13.0	83.0

(7) [(6)] 29 CFR 1910.101(b) shall be amended by revocation of referenced pamphlet P-1-1965 and the adoption of P-1-1974, herein filed by reference.

(8) [(7)] 29 CFR 1910.106 "Flammable and combustible liquids" is amended as follows: 29 CFR 1910.106(a)(3) shall read: "The term automotive service station, or service stations, shall mean that portion of property where flammable or combustible liquids used as motor fuel are stored and dispensed from fixed equipment and into the fuel tanks of motor vehicles and shall include any facilities available for the sale and servicing of tires, batteries, accessories and for minor automotive maintenance work and shall also include private stations not accessible or open to the public such as those used by commercial, industrial or governmental establishments. This section shall not apply to agriculture."

(9) [(8)] 29 CFR 1910.134 is amended as follows:

(a) 29 CFR 1910.134(c) shall read: "Proper selection of respirators shall be made according to the guidance of American National Standard Practices for Respiratory Protection Z88.2 - 1980."

(b) 29 CFR 1910.134(d) the third sentence shall read: "Breathing air shall meet at least the requirements of the specification for Grade D breathing air as described in Compressed Gas

Association Commodity Specification G-7.1 - 1973."

(c) 29 CFR 1910.134(g) shall read: Identification of Air-Purifying Respirator Canisters and Cartridges.

1. The primary means of identifying an air-purifying respirator canister or cartridge shall be by means of properly worded labels. The secondary means of identifying an air-purifying respirator canister or cartridge shall be by an identifying color or colors.

2. All who issue or use air-purifying respirators falling within the scope of this standard shall ensure that all canisters and cartridges purchased or used by them are properly labeled and colored in accordance with this standard before they are placed in service and that the labels and colors are properly maintained at all times thereafter until the canisters and cartridges have completely served their purpose. The user shall refer to the label wording to determine the type and degree of protection the canister or cartridge will afford.

3. On each air-purifying respirator canister and cartridge, the following shall appear in bold letters:

CANISTER FOR _____
(Name of atmospheric contaminant)

or

CARTRIDGE FOR _____
(Name of atmospheric contaminant)

In addition, either or both of subparagraphs a and b of this paragraph, and subparagraph (c) of this paragraph, shall appear beneath the appropriate phrase on the canister or cartridge label.

a. For respiratory protection in atmospheres containing not more than _____ by volume of
(Concentration)

_____
(Name of atmospheric contaminant)

b. For respiratory protection in atmospheres containing

_____
(Type of particulate contaminant)

c. Do not use in atmospheres containing less than nineteen and five-tenths (19.5) percent oxygen by volume at sea level.

4. Each respirator canister or cartridge, or canister or cartridge label, shall be a distinctive color as indicated in Table I-1. The color coating used shall offer a high degree of resistance to changes such as chipping, scaling, peeling, blistering, and fading, and to the effects of ordinary atmospheres to which they may be exposed under normal conditions of storage and use.

(d) 29 CFR 1910.134 Table I-1 shall read:

TABLE I-1
Color Assigned to Canister or Cartridge

Atmospheric Contaminant(s) to Be Protected Against	Color Assigned	ISCC-NBS Centroid Color Number	ISCC-NBS Centroid Color Name
Acid gases	White	263	White
Organic vapors	Black	267	Black
Ammonia gas	Green	139	Vivid green
Carbon monoxide gas	Blue	178	Strong blue
Acid gases and organic vapors	Yellow	82	Vivid yellow
Acid gases, ammonia, and organic vapors	Brown	75	Deep yellow brown
Acid gases, ammonia, carbon monoxide, and organic vapors	Red	11	Vivid red
Other vapors and gases not listed above	Olive	106	Light olive
Radioactive materials (except tritium and noble gases)	Purple	218	Strong purple
Dusts, fumes, and mists (other than radioactive materials)	Orange	48	Vivid orange

NOTES:

(1) A purple (ISCC-NBS Centroid Number 218) stripe shall be used to identify radioactive materials in combination with any vapor or gas.

(2) An orange (ISCC-NBS Centroid Number 48) stripe shall be used to identify dusts, fumes, and mists in combination with any vapor or gas.

(3) Where labels only are colored to conform with this table, the canister or cartridge body shall be gray (ISCC-NBS Centroid Number 265), or a metal canister or cartridge body may be left in its natural metallic color.

(4) The user shall refer to the wording of the label to determine the type and degree of protection the canister or cartridge will afford.

(10) [(9)] 29 CFR 1910.141(c)(2)(i) shall read as follows: "(1) Each water closet shall occupy a separate compartment with walls or partitions between fixtures sufficiently high to assure privacy."

(11) [(10)] 29 CFR 1910.151 relating to medical services and first aid shall be changed to read as follows:

"(a) The employer shall ensure the ready availability of medical personnel for advice and consultation on matters of occupational health."

"(b) Employers with eight (8) or more employees within the establishment shall have persons adequately trained to render first aid and first-aid supplies approved by the consulting physician, along with a signed list of these supplies, shall be readily available. Outside salesmen, truck drivers, seasonal labor, and others who while performing their duties, are away from the premises more than fifty (50)

percent of the time are not to be included in determining the number of employees."

"(c) All other employers shall, in the absence of an infirmary, clinic, or hospital in near proximity to the workplace which is used for the treatment of all injured employees, have a person or persons adequately trained to render first aid. First-aid supplies approved by the consulting physician shall be readily available."

"(d) Where the eyes or body of any person may be exposed to injurious corrosive materials, suitable facilities for quick drenching or flushing of the eyes and body shall be provided within the work area for immediate emergency use."

(12) [(11)] 29 CFR 1910.156(a)(2) "Application" is amended to read: "The requirements of this section apply to fire brigades; industrial fire departments; private fire departments; and municipal public fire departments and fire protection districts. Personal protective equipment requirements apply to members of fire brigades and fire departments performing interior structural fire fighting. The requirements of this section do not apply to airport crash rescue, forest fire fighting operations, or volunteer fire fighters."

(13) [(12)] 29 CFR 1910.217(b)(7)(xii) relating to machines using part revolution clutches shall be amended by adding the following:

"This provision will not prevent the employer from utilizing a reversing means of the drive motor with the clutch-brake control in the 'inch' position."

(14) [(13)] Amendments to 29 CFR 1910.243, "Guarding of Portable Powered Tools" as published in the Federal Register, Volume 50, Number 22, February 1, 1985 are adopted by reference.

(15) [(14)] Subparagraph 29 CFR 1910.252(a)(6)(iv), (d)(2) shall be corrected to read as follows:

"Wiring and electrical equipment in compressor or booster pump rooms or enclosures shall conform to the provisions of section 1910.309(a) for Class I, Division 2 locations."

(16) [(15)] 29 CFR 1910 Subpart T Appendix B "Commercial Diving Operations" as published in the Federal Register, Volume 50, Number 6, January 9 1985, is adopted by reference.

(17) 29 CFR 1910.1000, "Air Contaminants," Table Z-1 is amended as published in the Federal Register, Volume 50, Number 240, December 13, 1985, is adopted by reference.

(18) [(16)] 29 CFR 1910.1001 "Asbestos" is amended as follows: 29 CFR 1910.1001(d)(2)(iv)(a) is amended to read:

"The employer shall establish a respirator program in accordance with the requirements of the American National Standards Practices for Respiratory Protection, ANSI Z88.2 - 1980, which in incorporated by reference herein."

(19) [(17)] 29 CFR 1910.1005 4,4'-methylene bis (2-chloroaniline) and 29 CFR 1910.1003 through .1016 paragraphs (c)(6), Laboratory Activities, printed in the Federal Register, Volume 39, Number 125, June 27, 1974, are in effect.

(20) [(18)] Paragraph 1910.1005(c)(7) of the 29 CFR 1910 General Industry Standards shall read as follows:

"Premixed Solutions: Where 4,4'-methylene bis (2-chloroaniline) is present only in a single solution at a temperature not exceeding 120 degrees Celsius, the establishment of a regulated area is not required; however, (i) only authorized employees shall be permitted to handle such materials."

(21) [(19)] 29 CFR 1910.1025 "Occupational Exposure to Lead" shall be amended as follows: "Table 1 - Implementation Schedule" is amended to read:

(22) [(20)] 29 CFR 1910.1029 "Coke Oven Emissions" shall be amended as follows: Revision as published in the Federal Register, Volume 50, Number 178, September 13, 1985 are adopted by reference.

(23) 29 CFR 1910.1043, "Cotton Dust Standard" as published in the Federal Register, Volume 50, Number 240, December 13, 1985, is adopted by reference.

(24) [(21)] 29 CFR 1910.1047, "Ethylene Oxide" be amended as follows:

(a) Revisions as published in the Federal Register, Volume 50, Number 48, March 12, 1985 are adopted by reference.

(b) Revisions as published in the Federal Register, Volume 15, Number 198, October 11, 1985 are adopted by reference.

(25) Amendments to 29 CFR 1910.1200, "Hazard Communication" as published in the Federal Register, Volume 50, Number 229, November 27, 1985, are adopted by reference.

TABLE 1 - Implementation Schedule

INDUSTRY[1] ug/m³	COMPLIANCE DATES 200 ug/m³	100 ug/m³	50
Primary Lead Production	(2)	June 29, 1984	June 29, 1991
Secondary Lead Production	(2)	June 29, 1984	June 29, 1986
Lead Acid Battery Manufacture	(2)	June 29, 1983	June 29, 1986
Automobile/Manufacture/Solder Grinding	(2)	N/A	June 29, 1988
Electronics, Gray Iron Foundries, Ink Manufacture, Paints and Coatings Manufacture, Wall Paper Manufacture, Can Manufactures, and Printing	(2)	N/A	June 29, 1982
Lead Pigment Manufacture, NonFerrous Foundries, Leaded Steel Manufacture, Lead Chemical Manufacture, Ship Building and Ship Repair, Battery Breaking in the Collection and Processing of Scrap (excluding collection and processing of scrap which is part of a secondary smelting operation), Secondary Smelting of Copper, and Lead Casting	(2)	N/A	N/A

All Other Industries	(2)	N/A	June 11, 1984	None

[1] Includes ancillary activities located on the same worksite.

2. On effective date. This continues an obligation from Table Z-2 of 29 CFR 1910.1000 which had been in effect since 1971 but which was deleted upon effectiveness of this section.

JOHN CALHOUN WELLS, Chairman
APPROVED BY AGENCY: June 4, 1986
FILED WITH LRC: June 13, 1986 at 11 a.m.
PUBLIC HEARING SCHEDULED: A public hearing concerning these regulations has been scheduled for July 25, 1986 at 1 p.m. (EST), to be held at the Kentucky Labor Cabinet, U.S. 127 Building South, Bay 2 Conference Room, Frankfort, Kentucky. Those interested in attending must provide by July 20, 1986, written notice to Mr. Guy Schoolfield, Kentucky Labor Cabinet, Division of Education and Training, OSH Assistance Brance, U.S. 127 Building South, Frankfort, Kentucky 40601.

REGULATORY IMPACT ANALYSIS

Agency Contact Person: Guy Schoolfield
(1) Type and number of entities affected: These amendments will affect those general industry workplaces which have operations utilizing cotton dust, as well as operations subject to the Hazard Communication Standard.
(a) Direct and indirect costs or savings to those affected: No costs or savings to the Kentucky OSH Program will occur as a result of these amendments.
1. First year:
2. Continuing costs or savings:
3. Additional factors increasing or decreasing costs (note any effects upon competition):
(b) Reporting and paperwork requirements: No additional reports or records are required by these amendments.
(2) Effects on the promulgating administrative body:
(a) Direct and indirect costs or savings: No costs or savings to the Kentucky OSH Program will occur as a result of these amendments.
1. First year:
2. Continuing costs or savings:
3. Additional factors increasing or decreasing costs:
(b) Reporting and paperwork requirements: No additional reports or records are required by these amendments.
(3) Assessment of anticipated effect on state and local revenues: These amendments will have no effect on state and local revenues.
(4) Assessment of alternative methods; reasons why alternatives were rejected: N/A
(5) Identify any statute, administrative regulation or government policy which may be in conflict, overlapping, or duplication: No statutes, rules, regulations, or governmental policies conflict, overlap, or duplicate these amendments.
(a) Necessity of proposed regulation if in conflict:
(b) If in conflict, was effort made to harmonize the proposed administrative regulation with conflicting provisions:
(6) Any additional information or comments:
Tiering:
Was tiering applied? No. The Occupational Safety and Health Program targets its scheduled inspections toward those industries or firms that pose higher risks to worker health and safety or from which the OSH Program has received worker complaints.

CABINET FOR HUMAN RESOURCES
Department for Health Services
(Proposed Amendment)

902 KAR 8:020. Policies and procedures for local health department operations.

RELATES TO: KRS Chapter 212
PURSUANT TO: KRS 194.050, 211.090, 211.170, 211.180, 213.410
NECESSITY AND FUNCTION: KRS 211.170 directs the Cabinet for Human Resources to establish policies governing the activities of local health departments. This regulation adopts various manuals setting policies and standards for health departments.

Section 1. Local Health Policy Manual. The policies set forth in the February 15, 1986, edition of the "Local Health Policy Manual" governing the maintenance and operation of local health departments are hereby adopted by reference.

Section 2. Financial Management Manual. The policies set forth in the June [February] 15, 1986, edition of the "Financial Management Manual" governing the operation of the financial management systems used by local health departments are hereby adopted by reference.

Section 3. Patient Services Reporting System Manual. The policies set forth in the May 1, 1984, edition of the "Patient Services Reporting System Manual" governing the collection of patient health/medical services delivered by local health departments are hereby adopted by reference.

Section 4. Medical Records System Policy and Procedure Manual for Local Health Departments in Kentucky. The policies and procedures set forth in the May 1, 1984, edition of the "Medical Records System Policy and Procedure Manual for Local Health Departments in Kentucky" governing the development and maintenance of medical records in local health departments are hereby adopted by reference.

Section 5. Planning Manual for Local Health Departments. The policies set forth in the July, 1986, edition of the "Planning Manual for Local Health Departments" governing the annual program planning process and procedures of local health departments are hereby adopted by reference.

Section 6. Standards Manual for Local Health Departments. The policies set forth in the July, 1986, edition of the "Standards Manual for Local Health Departments" governing the programmatic operations of local health departments are hereby adopted by reference.

Section 7. Local Health Department Environmental Data System Operational Procedures for Weekly Environmental Activity Report, Sanitation Programs Information Formulator, and Local Health Annual Data Report. The policies set forth in the September, 1982, edition of the "Local Health Department Environmental Data System Operational Procedures for Weekly Environmental Activity Report, Sanitation Programs Information Formulator, and Local Health Annual Data Report" are hereby adopted by reference.

Section 8. On-Line Environmental Health Management Information System. The policies set forth in the February 14, 1984, edition of the "On-Line Environmental Health Management Information System" manual are hereby adopted by reference.

Section 9. MCH Maternity Manual. The policies set forth in the July 1, 1985, edition of the "MCH Maternity Manual" governing the operation of the prenatal program conducted by local health departments are hereby adopted by reference.

Section 10. Sudden Infant Death Syndrome Program. The policies set forth in the January 1, 1985, edition of the "Sudden Infant Death Syndrome Program" manual governing the operation of the Sudden Infant Death Syndrome Program conducted by local health departments are hereby adopted by reference.

Section 11. Standards for Genetic Disease Testing, Counseling and Education Services Program. The policies set forth in the October 15, 1985, edition of the "Standards for Genetic Disease Testing, Counseling and Education Services Program" manual governing the operation of genetic disease testing and counseling clinics conducted by local health departments are hereby adopted by reference.

Section 12. Standards for Regional Pediatric Clinics. The policies set forth in the October 15, 1985, edition of the "Standards for Regional Pediatric Clinics" manual governing the operation of regional pediatric programs conducted by local health departments are hereby adopted by reference.

Section 13. Standards for Preventive Health Care in Children. The policies set forth in the December 15, 1985, edition of the "Standards for Preventive Health Care in Children" manual governing the operation of well child programs conducted by local health departments are hereby adopted by reference.

Section 14. Standards for Child Restraint Program. The policy set forth in the January 1, 1986, edition of the "Standards for the Child Restraint Program" manual governing the operation of safety seat loan programs conducted by local health departments are hereby adopted by reference.

Section 15. Location of Manuals Referenced in This Regulation. A copy of each manual referenced in this regulation is on file in the Office of the Commissioner for Health Services, 275 East Main Street, Frankfort, Kentucky, and is open to public inspection.

Section 16. Summary of Amendment. (1) In relation to Section 2 relating to the Financial Management Manual, the "Accounting, Auditing and Financial Reporting Policies and Procedures Section" is being revised by adding OMB Circular A-128 "Audits of State and Local Governments", to the audit standards that local health departments must meet. With this change, the scope of the audit will be expanded to require additional work in internal systems, compliance testing and additional reporting for federally assisted programs conducted by local health departments. [5 relating to the Planning Manual for local health departments, the Manual has been revised effective July 1, 1986 as follows:]

[(a) The planning format, as specified in the Introduction, has been adjusted for program areas where services are unplanned and offered on demand; programs administered outside the constraints of the Cabinet for Human Resources will no longer require preparation of a formal plan.]

[(b) The Planning Schedule has been revised as the significant activities within the planning process have been rescheduled.]

[(c) Under categories of Environmental Plans, reporting area 685 Private Sewage has been added to provide a mechanism to recognize on-site waste systems previously installed.]

[(d) Under categories of Medical Plans, reporting areas 705 and 884 have received name changes and 878 has been reinstated.]

[(2) In relation to Section 6 relating to the Standards Manual for local health departments, this manual has been revised and republished in its entirety to be effective July, 1986. In addition to minor changes for clarity, updating statistical data and terminology, the following substantive changes were made:]

[(a) All existing Environmental Program Standards were revised for clarity without change in content except that the Private Water Standards were changed to reinstate bacteriological sample analysis upon request to the local health department.]

[(b) Standards were added for the newly created Private Sewage Program.]

[(c) Within the Genetic Disease Program Standards the following major changes were made:]

[1. The program mandate is no longer Federal SPRANS Funding;]

[2. Minimum service levels include a target of seven (7) scheduled patients per clinic; and]

[3. Service periodicity has been reduced to a total of four (4) clinics per year.]

[(d) The Hearing Conservation Program Standards were revised to clarify the role of local health departments and the Kentucky Commission for Handicapped Children in the delivery of services.]

[(e) Prenatal Program Standards have been revised to include a change in the requested format of the program plans reducing the size of the plan to be submitted simplifying the planning process without any change in the scope of services.]

[(f) The major changes within the MCH-Nutrition Standards are as follows:]

[1. A copy of the assessment of nutritional needs of the area served shall be submitted with the original program plan;]

[2. Performance criteria and personnel

operations were changed to guarantee that an appropriate level of services will be provided by a qualified nutritionist;]

[3. The Records Section was changed to require documentation of physician requests for therapeutic counseling; and]

[4. Submission of quarterly expenditure reports are no longer required.]

[(g) Problem indicators within the Immunization Program Standards relating to the percentage of two (2) year olds immunized at the health department and vaccine supply utilization efficiency have been deleted since this information is now available at the state level.]

[(h) Home Health Program Standards have been revised in their entirety. Specifically, both operational and performance criteria have been revised to reflect and promote the operation of a more efficient and cost effective home health program in conformance with Medicare's and Medicaid's stringent reimbursement and programmatic policies, rules and regulations.]

[(i) Program Standards were revised to include the purpose, rationale and goals of the Health Education Program.]

[(j) The Preventacare Program Standards have been deleted because federal funding has been eliminated.]

[(k) In addition to minor text changes, significant revisions in the Family Planning Standards are as follows:]

[1. The target population now includes all women age thirteen (13) through nineteen (19);]

[2. The percentage of need to be met has been reduced from fifty (50) percent to at least forty (40) percent which is a more realistically attainable goal; and]

[3. The cost efficiency level has been increased from sixty-eight (68) dollars to seventy (70) dollars per patient per year in keeping with the state average.]

[(l) The Tuberculosis Program Standards were revised to reflect minor changes in reporting requirements and the listing of problem indicators was deleted since it is already included within the objectives.]

[(m) Significant revisions in the WIC Program Standards are as follows:]

[1. Section I, when a local agency reaches its authorized enrollment, the local agency shall contact the state agency to determine if additional funds are available for a case load increase prior to implementing the priority system; agencies shall strive to increase priority I-III individuals to eighty-one (81) percent as follows: priority I - twenty-five (25) percent, priority II - sixteen (16) percent, priority III - forty (40) percent; and the criterion that an annual participation rate of no less than ninety-two (2) percent shall be maintained has been deleted.]

[2. Section II, to facilitate referral into other programs and to promote integration of services, it is strongly recommended that a physician or nurse perform the health assessment; and, battery operated hemoglobinometers may not be used in obtaining hemoglobin levels as a part of the WIC certification process.]

[(n) The Cancer Program Standards were revised to:]

[1. Include information on smoking and its effect on health, particularly lung cancer;]

[2. Require an adult history to be completed on all women receiving cancer services;]

[3. Increase state allocations to local health departments from twenty (20) dollars to twenty-five (25) dollars for each woman receiving cancer services in the forty-five (45) and over age group and from twelve (12) dollars to fifteen (15) dollars for each screening in the under forty-five (45) age group;]

[4. Increase the average allowable cost per patient from thirty (30) dollars to thirty-five (35) dollars; and]

[5. Recommend that the specific nomenclature used in laboratory reports be used in negotiating with a cytology laboratory.]

[(o) Within the Diabetes Program Standards the following significant changes were made:]

[1. The medical record will include an adult history form on all clients receiving comprehensive education and counseling through the local health department and a nutrition assessment when appropriate;]

[2. Diagnosed diabetics will be reported on the PSRS using the ICD-9CM Code 250, and local health department should use the 600 Code (monitoring) when providing individualized education and counseling to diabetics, with special emphasis on the elimination of tobacco use; and]

[3. A method was established for reimbursing local health departments for direct monitoring of persons with diabetes at a rate not to exceed ten (10) dollars per visit for up to 180 visits per year.]

[(p) Program Standards for the Well Child and EPSDT Programs have been changed to reflect an automated reporting system and the coding requirements of that system.]

[(q) Within the Hypertension Program, the Standards were changed to:]

[1. Require an adult history to be completed for monitored patients and to recommend completing the Eating Habits Screening Checklist as part of the nutrition assessment;]

[2. Delete requirement that health service code 800 be utilized to designate hypertensives not enrolled in the monitoring program and require that health service code 100 be utilized instead;]

[3. Require ICD-9-CM "401..." for reporting all hypertensive patients receiving health department services;]

[4. Allowable average cost per patient monitored in the local health department was increased from sixty (60) dollars to eighty-five (85) dollars; and]

[5. Local health departments are required to maintain a copy of Salt: The Brand Name Guide to Sodium Content in their libraries as a reference document.]

[(r) New standards have been added for the Child Restraint Program to ensure services are provided in accordance with acceptable standards of practice.]

[(s) Standards for Heart Disease and Rheumatic Fever have been deleted because these programs are no longer administered by the health department.]

C HERNANDEZ, Commissioner
E. AUSTIN, JR., Secretary
APPROVED BY AGENCY: May 30, 1986
FILED WITH LRC: June 6, 1986 at 11 a.m.
PUBLIC HEARING SCHEDULED: A public hearing on this regulation has been scheduled for June 21,

1986 at 9 a.m. in the Department for Health Services Auditorium, 275 East Main Street, Frankfort, Kentucky. However, this hearing will be cancelled unless interested persons notify the following office in writing by June 16, 1986 of their desire to appear and testify at the hearing: Ryan Halloran, Acting General Counsel, Cabinet for Human Resources, 275 E. Main Street, 4 West, Frankfort, Kentucky 40621.

REGULATORY IMPACT ANALYSIS
(Section 2, Financial Management Manual)

Agency Contact Person: Phillip R. Spangler
(1) Type and number of entities affected: 49 local health departments.
(a) Direct and indirect costs or savings to those affected: The required increase in the scope of the audit will result in an increase in its cost.
1. First year: Estimated 25% increase in cost per department over previous years audits.
2. Continuing costs or savings: Estimated 25% increase in cost per department over previous years audits.
3. Additional factors increasing or decreasing costs (note any effects upon competition): None
(b) Reporting and paperwork requirements: None
(2) Effects on the promulgating administrative body: None
(a) Direct and indirect costs or savings: None
1. First year:
2. Continuing costs or savings:
3. Additional factors increasing or decreasing costs:
(b) Reporting and paperwork requirements: None
(3) Assessment of anticipated effect on state and local revenues: None
(4) Assessment of alternative methods; reasons why alternatives were rejected: N/A
(5) Identify any statute, administrative regulation or government policy which may be in conflict, overlapping, or duplication: None
(a) Necessity of proposed regulation if in conflict: N/A
(b) If in conflict, was effort made to harmonize the proposed administrative regulation with conflicting provisions: N/A
(6) Any additional information or comments: None

Tiering:
Was tiering applied? No. Not applicable.

CABINET FOR HUMAN RESOURCES
Department for Mental Health
and Mental Retardation Services
Division of Institutional Care
(Proposed Amendment)

902 KAR 12:060. Per diem rate pursuant to the "Patient Liability Act of 1978."

RELATES TO: KRS 210.700 to 210.760
PURSUANT TO: KRS 13A.210, 210.720 to 210.760
NECESSITY AND FUNCTION: KRS 210.720(2) directs the Secretary of Human Resources to fix the patient cost per day for board, maintenance and treatment for each facility operated by the cabinet at frequent intervals which shall be the uniform charge for all persons receiving such services. The function of this regulation is to fix the patient cost per day for board, maintenance and treatment at facilities operated by the cabinet [at the facilities designated in this regulation in accordance with the Patient Liability Act of 1978, KRS 210.700 to KRS 210.760].

Section 1. Facilities with an All-Inclusive Per Diem Rate. The following facility shall be on an all-inclusive per diem rate:

Facility	[Per Diem Rate]
Eastern State Hospital	[$140]

Section 2. Facilities with a Routine Service Charge Per Diem with Separate Charges for Treatment [Ancillary] Services on an Individual Basis.

Facility	[Routine Services] [Per Diem]
Central State Hospital	[$165]
Central State [Hospital] - ICF/MR	[140]
Western State Hospital	[85]
Western State ICF	[55]
Outwood ICF/MR	[135]
Oakwood ICF/MR	[95]
Hazelwood ICF/MR	[125]
Glasgow ICF	[75]

The treatment [ancillary] services furnished and/or available at Department for Mental Health and Mental Retardation Services [Health Services] Facilities shall be: physicians services, EEG, EKG, occupational therapy, physical therapy, [oxygen therapy,] X-ray, laboratory, speech and hearing therapy, psychology, pharmacy and electroshock therapy. [Ancillary charge rates are based on latest audited cost report plus the health portion of the Consumer Price Index for each past audited cost report, and will be available in the Department for Health Services, Budget and Fiscal Planning Branch, and shall be available for public inspection.]

Section 3. Board, Maintenance and Treatment Charges. Cost per day for board, maintenance and treatment charges shall be fixed using the last available audited third party cost report (Medicare and Medicaid) trended and indexed for inflation for subsequent years. The basis for trending and indexing shall be current Data Resources Inc. Index for hospitals and intermediate care facilities. Current rates shall be posted at each facility and shall be available for public inspection in the Office of the Commissioner for Mental Health and Mental Retardation Services.

DENNIS D. BOYD, Commissioner
E. AUSTIN, JR., Secretary
APPROVED BY AGENCY: June 13, 1986
FILED WITH LRC: June 13, 1986 at noon
PUBLIC HEARING SCHEDULED: A public hearing on this regulation has been scheduled for July 21, 1986 at 9 a.m. in the Department for Health Services Auditorium, 275 East Main Street, Frankfort, Kentucky. However, this hearing will be cancelled unless interested persons notify the following office in writing by July 16, 1986 of their desire to appear and testify at the hearing: Ryan Halloran, Acting General Counsel,

Cabinet for Human Resources, 275 East Main Street, 4 West, Frankfort, Kentucky 40621.

REGULATORY IMPACT ANALYSIS

Agency Contact Person: Ryan Halloran
(1) Type and number of entities affected: Three acute care facilities; four intermediate care facilities for mentally retarded; and two intermediate care facilities.
(a) Direct and indirect costs or savings to those affected: None
1. First year:
2. Continuing costs or savings:
3. Additional factors increasing or decreasing costs (note any effects upon competition):
(b) Reporting and paperwork requirements: Periodic administrative order fixing rates for the facilities.
(2) Effects on the promulgating administrative body: The ability to maximize revenues to the department in the ability to fix rates so as not to penalize the department in the lower of cost or charges aspect of third party reimbursement.
(a) Direct and indirect costs or savings:
1. First year: $100,000
2. Continuing costs or savings: $100,000 per year.
3. Additional factors increasing or decreasing costs:
(b) Reporting and paperwork requirements:
(3) Assessment of anticipated effect on state and local revenues: None
(4) Assessment of alternative methods; reasons why alternatives were rejected:
(5) Identify any statute, administrative regulation or government policy which may be in conflict, overlapping, or duplication: None
(a) Necessity of proposed regulation if in conflict:
(b) If in conflict, was effort made to harmonize the proposed administrative regulation with conflicting provisions:
(6) Any additional information or comments: The ability to change rates in a quick manner will enhance the collection ability from third parties. This ability will help us meet our budgeted revenues for the upcoming years.

Tiering:
Was tiering applied? Yes. Does not apply.

CABINET FOR HUMAN RESOURCES
Department for Health Services
(Proposed Amendment)

902 KAR 16:010. Disability determinations program.

RELATES TO: KRS 194.030(6), 205.200, 205.245, 205.520
PURSUANT TO: KRS 194.050
NECESSITY AND FUNCTION: The Cabinet for Human Resources has responsibility, under KRS Chapter 205, to administer programs of public assistance in accordance with Titles IV-A and XIX of the Social Security Act, and KRS 205.245. The cabinet is also responsible, under Section 404.1503 of Chapter III of Title 20 of the Code of Federal Regulations [by agreement with the United States Department of Health and Human Services], for determinations of disability under the provisions of Titles II and XVI of the Social Security Act. This regulation incorporates into regulatory form, by reference, materials used in determinations of disability under Titles II, IV-A, XVI and XIX of the Social Security Act, and KRS 205.245. The program for making disability determinations shall be referred to herein as the disability determinations program.

Section 1. Incorporation by Reference. The cabinet shall incorporate by reference materials used in the implementation of the disability determinations program[, subject to the provisions contained in 904 KAR 2:140, Section 1, Supplementary policies for programs administered by the Department for Social Insurance].

Section 2. Listing of Incorporated Materials. The following materials are hereby incorporated by reference, effective on the date shown:
(1) Social Security Disability Rulings, effective May 1, 1986 [16, 1984];
(2) Social Security Disability Program Operations Manual, Part 04 [4], Chapters 200 through 295, and 305 through 342 [7 and 9], effective May 1, 1986 [16, 1984]; and
[(3) Social Security Disability Program Operations Manual, Part 04, Chapters 001, 003, and 005, effective May 16, 1984;]
[(4) Social Security Disability Program Operations Manual, Part 04, Chapter 004, effective May 16, 1984;]
[(5) Social Security Disability Program Operations Manual, Part 04, Chapters 006, 007, 009, and 010, effective May 16, 1984; and]
(3) [(6)] Social Security Administration instructional messages, effective May 1, 1986 [July 1, 1984].

Section 3. All documents incorporated by reference herein may be reviewed during regular working hours in the Division of Disability Determinations [Management and Development], Department for Health Services [Social Insurance], 275 [175] East Main Street, Frankfort, Kentucky.

C. HERNANDEZ, Commissioner
E. AUSTIN, JR., Secretary
APPROVED BY AGENCY May 23, 1986
FILED WITH LRC: June 6, 1986 at 11 a.m.
PUBLIC HEARING SCHEDULED: A public hearing on this reguation has been scheduled for July 21, 1986 at 9 a.m. in the Department for Health Services Auditorium, 275 East Main Street, Frankfort, Kentucky. However, this hearing will be cancelled unless interested persons notify the following office in writing by July 16, 1986 of their desire to appear and testify at the hearing: Ryan Halloran, Acting General Counsel, Cabinet for Human Resources, 275 East Main Street, 4 West, Frankfort, Kentucky 40621.

REGULATORY IMPACT ANALYSIS

Agency Contact Person: Ben Fannin
(1) Type and number of entities affected: No assistance program recipients.
(a) Direct and indirect costs or savings to those affected: None
1. First year:
2. Continuing costs or savings:
3. Additional factors increasing or decreasing

costs (note any effects upon competition):
(b) Reporting and paperwork requirements: None
(2) Effects on the promulgating administrative body:
(a) Direct and indirect costs or savings: None
1. First year:
2. Continuing costs or savings:
3. Additional factors increasing or decreasing costs:
(b) Reporting and paperwork requirements: None
(3) Assessment of anticipated effect on state and local revenues: None
(4) Assessment of alternative methods; reasons why alternatives were rejected: N/A
(5) Identify any statute, administrative regulation or government policy which may be in conflict, overlapping, or duplication: None
(a) Necessity of proposed regulation if in conflict:
(b) If in conflict, was effort made to harmonize the proposed administrative regulation with conflicting provisions:
(6) Any additional information or comments: These materials represent a complete reorganization of instructional materials on the Social Security disability program. There is no measureable cost in fact on programs administered by the Cabinet.

Tiering:
Was tiering applied? No. Not applicable to disability program.

CABINET FOR HUMAN RESOURCES
Department for Employment Services
Division of Unemployment Insurance
(Proposed Amendment)

903 KAR 5:260. Unemployment insurance procedures.

RELATES TO: KRS 341.005 through 341.990
PURSUANT TO: KRS 13A.100, 194.050(1), 341.115
NECESSITY AND FUNCTION: Title III of the Social Security Act authorizes the states to implement an unemployment insurance program. The Cabinet for Human Resources is authorized by KRS 194.050 to adopt such rules and regulations as are necessary to implement programs mandated by federal law or to qualify for receipt of federal funds and as are necessary to cooperate with federal agencies for the proper administration of the cabinet and its programs. The function of this regulation is to implement the procedures required to administer the unemployment insurance program in accordance with applicable state and federal laws and regulations.

Section 1. In order to facilitate the administration of the unemployment insurance program as authorized by Title III of the Social Security Act and KRS Chapter 341, the following operating manuals are adopted by reference:
(1) Unemployment Insurance Local Office Manual as issued February, 1984 and last revised May 8 [April 22], 1986. This manual includes procedures: for requiring proper identification of persons filing claims for benefits; for taking and processing initial, additional, reactivated and continued claims for benefits; for assigning claimants to the appropriate group for the eligibility review program; for conducting the eligibity review program; for stopping and releasing payment of benefits; for entering claim history and benefit payment information into the data base; for taking and processing interstate claims, combined wage claims, claims by former federal employees and ex-servicemembers, and claims for extended benefits and federal supplemental compensation benefits; for conducting investigations and issuing determinations regarding a claimant's separation, ability to work, availability for work, active search for work, benefit entitlement, and deductions from benefits; for processing employers' protests to claims; for taking requests for reconsideration of monetary eligibility; for establishing benefit overpayments and initiating recovery or recoupment by processing partial payment agreements or issuing liens; for initiating action on lost or returned checks; for detecting and initiating recovery of fraudulent overpayments; for filing appeals to eligibility determinations; for reporting workload time spent; for compiling claims and nonmonetary determination statistics; and for ranking of local offices based on performance criteria.
(2) Unemployment Insurance Benefit Branch Procedures Manual issued May, 1982 and last revised March 7, 1986. This manual includes procedures for administering the payment of unemployment insurance benefits; for maintaining accounts for all benefit income and expenditures; for detecting, establishing and initiating recovery of benefit overpayments; for assigning benefit charges to employer accounts; for conducting a quality review of nonmonetary determinations affecting the payment of benefits; for processing unemployment claims for former federal employees, ex-servicemembers, combined wage claimants, interstate claims, claims for Disaster Unemployment Assistance, claims under the Trade Readjustment Act and claims under the Work Incentive Program; for reconsidering monetary rate determinations; for processing payment for lost or returned benefit checks; and for investigating potential fraud and recommendation of recovery action or criminal prosecution.
(3) Unemployment Insurance Tax Collection and Accounting Branch Manual issued November, 1982 and last revised May 1 [April 4], 1986. This manual includes procedures: for setting up, transferring and cancelling employer contribution and reimbursement accounts; for collecting quarterly taxes from contributory employers and for billing reimbursing employers for benefits paid; for auditing quarterly wages and tax reports by making adjustments, assessing additional payment and penalties and crediting tax overpayments; for adjusting wages if required when a reconsideration of monetary benefit eligibility is filed; and for collecting delinquent taxes by filing tax liens, recommending suits and temporary restraining orders, garnishing wages, filing claims in bankruptcy or against monies due to delinquent employers from state agencies.
(4) Unemployment Insurance Administrative Support Branch Manual issued December, 1983 and last revised November 9, 1984. This manual includes procedures: for maintaining files of benefit claims, employer records, appeals, and unemployment insurance commission orders; for maintaining mail security operations for all checks received by the division; for gathering

statistics and conducting statistical studies; for verifying workload items for the budget process; for publishing statistical reports for the division and for general publication; for maintaining and distributing federal and state-released procedures; for maintaining all procedures manuals; for conducting the unemployment insurance quality appraisal; for training division personnel; for retaining and disposing of records; for providing data processing liaison services; for preparing state and federal budgets; for operating the Cost Model Management System; for maintaining the Cost Information System; for controlling forms control; and for monitoring purchases, expenditures and repairs.

(5) Unemployment Insurance Field Audit Manual issued February, 1984 and last revised January 11, 1985. This manual includes procedures for handling matters which cannot be handled directly or expediently by the central office tax branch, such as procedures: for locating employers; for conducting investigations of employers, and their payrolls and employment records; for determining an employer's status under the law; for assessing contributions and collecting delinquent contributions; for serving legal papers; for conducting property investigations; for auditing employer records; and for furnishing technical assistance to employers.

(6) Unemployment Insurance Director's Office Manual issued November 18, 1983, and last revised December 12, 1984. This manual includes procedures for operating the Fraud Investigations and Internal Security Unit such as procedures for: administering the unit; detecting fraud; prosecuting fraud cases; closing out fraud cases; preventing fraud; maintaining internal security; and conducting other investigations.

(7) Kentucky Unemployment Insurance Commission Administrative Branch Manual issued September 1, 1985. This manual includes procedures for the daily operations of the branch. Such procedures include staff duties and responsibilities, the review of cases, the conduct of hearings, the preparation of decisions and the proper handling of records and reports.

Section 2. All documents incorporated by reference herein are on file for public inspection in the Office of the Commissioner for Employment Services, 275 East Main Street, Frankfort, Kentucky 40621 and in local unemployment insurance offices located throughout the state.

Section 3. Summary of Amendment. Unemployment Insurance Local Office Manual. (1) Chapter 8000 [4000], Appeals [Video Operations], strike contents dated 10-30-85 [pages (4215-4215(2)) - (4216-4230) dated 3-11-86], and substitute in lieu thereof contents dated 5-5-86 [pages (4215-4215(2)) - (4230-4230) dated 4-7-86, which provides instructions for entering payorders for disqualified or invalid weeks and an address for submitting the Equipment Operations Log.] Strike pages (8000-8008) - (8008-8010) dated 4-10-86, and pages (8010-8014) - (8016-8702) dated 10-30-85, and substitute in lieu thereof pages (8000-8008) - (8016-8702) dated 5-5-86, which revises the procedures requiring a sworn statement when the appellant fails to attend a hearing or after the appeal period has expired and wishes to appeal the decision and provides instructions that only a representative of the Appeals Branch can grant a continuance or set up a telephone hearing.

(2) Chapter 14000 [5000], Charts, Form Letters, Reference Materials [Interstate and Combined Wage Claims], strike contents dated 2-28-86 [11-21-83, and entire chapter], and substitute in lieu thereof contents dated 5-8-86, and new pages ((14030) - (14030) - (14030) - (14030(10)), dated 5-8-86, which adds a new section consisting of addresses of state government agencies used in mailing notices of benefit claims [new Chapter dated 4-1-86, which provides instructions for the telecommunication of interstate claims, removes duplicated material from the Combined Wage Claims Section and revises the chapter's format to the standardized Department for Employment Services Manual format].

[(3) Chapter 6000, Claims Investigation, strike pages (6130-6131) dated 11-15-85, and pages (6131-6132) - (6132-6150) dated 9-16-85, and substitute in lieu thereof pages (6130-6131) - (6132-6150) dated 4-1-86, which provides instructions for the issuance of a form to the claimant explaining why a request for training approval was denied. Strike pages (6275-6280) - (6300-6302) dated 9-16-85, and insert in lieu thereof pages (6275-6280) - (6300-6302) dated 4-3-86, which provides for the administrator or appointee of the district judge to certify as to eligibility and sign a claim for benefits after the claimant's death. Strike pages (6015-6016) - (6017-6017) dated 12-11-85, and insert in lieu thereof pages (6015-6016) - (6017-6017) dated 4-14-86, which provides additional guidelines in determining eligibility of school employees involving a vacation or holiday period. Strike pages (6190-6190) - (6190-6193) dated 3-10-86, and insert in lieu thereof pages (6190-6190) - (6190-6193) dated 4-14-86, which provides instructions regarding the reallocation of wages from the quarter they were paid to the quarter they were earned resulting in an invalid claim becoming valid. Strike pages (6130-6131) - (6133-6150) dated 4-1-86, and pages (6150-6175) - (6179-6179) dated 3-10-86, and insert in lieu thereof pages (6130-6131) - (6179-6179) dated 4-16-86, which defines the criteria for approval or disapproval of requests for Approved Training and more fully describes the form used by the local office JTPA Coordinator. Strike pages (6034)-6039) - (6039-6040) dated 3-10-85, and insert in lieu thereof pages (6034-6039) - (6039-6040) dated 4-22-86, which adds an additional company to the list of employers with approved SUB plans.]

[(4) Chapter 7000, Fraud, strike pages (7000-7008) - (7010-7020) dated 10-18-85, and substitute in lieu thereof pages (7000-7008) - (7020-7020) dated 4-2-86, which provides instructions for identifying and notifying central office of claimants with unserved warrants.]

[(5) Chapter 8000, Appeals, strike pages (8000-8008) - (8008-8010) dated 10-30-85, and substitute in lieu thereof pages (8000-8008) - (8008-8010) dated 4-10-86, which provides instructions for preparation and distribution of appeal forms.]

[(6) Chapter 10000, Unemployment Compensation for Ex-Servicepersons, strike pages

(10030-10032) - (10032-10034) dated 1-15-86, and pages (10040-10044) - (10044-10044) dated 1-15-86, and insert in lieu thereof pages (10030-10032) - (10032-10034) dated 4-8-86, and pages (10040-10044) - (10044-10044) dated 4-8-86, which removes references to a form that is now obsolete.]

[(7) Chapter 13000, Statistical Reports, strike pages (13220-13220) - (13220-13220(2)) dated 11-14-86, and insert in lieu thereof pages (13220-13220) - (13220-13220(2)) dated 4-2-86, which adds instructions for preparation of a form.]

Section 4. Summary of Amendment. Tax Collections and Accounting Branch Manual. (1) Chapter 3000 [200], Account and Delinquency Section - Procedures Manual [Compliance Unit], strike entire Chapter 300 dated 7-29-83 [200 dated 11-30-82], and substitute in lieu thereof Chapter 3000 dated 4-4-86, which removes samples of forms, clarifies the section's operating procedures, and revises the Chapter's format to the standardized Department for Employment Services Manual format [2000, dated 4-4-86, Status and Compliance Section - Compliance Functions, which revises the chapter's format to the standardized Department for Employment Services Manual format and clarifies the section's operating procedures].

(2) Chapter 4000, Reconsideration Unit, strike entire Chapter 400 dated 5-1-84, and substitute in lieu thereof Chapter 4000 dated 5-1-86, which removes samples of forms, clarifies the unit's operating procedures and revises the chapter's format to the standardized Department for Employment Services Manual format.

JAMES P. DANIELS, Commissioner
E. AUSTIN, JR., Secretary
APPROVED BY AGENCY: June 3, 1986
FILED WITH LRC: June 13, 1986 at noon
PUBLIC HEARING SCHEDULED: A public hearing on this regulation has been scheduled for July 21, 1986, at 9 a.m. in the Health Services Auditorium, 275 East Main Street, Frankfort, Kentucky. However, this hearing will be cancelled unless interested persons notify the following office in writing by July 16, 1986, of their desire to appear and testify at the hearing: Ryan Halloran, Acting General Counsel, Office of General Counsel, Cabinet for Human Resources, 275 East Main Street, Frankfort, Kentucky 40621.

REGULATORY IMPACT ANALYSIS

Agency Contact Person: James Daniels
(1) Type and number of entities affected: Thousands of U.I. claimants.
(a) Direct and indirect costs or savings to those affected:
1. First year: None
2. Continuing costs or savings: None
3. Additional factors increasing or decreasing costs (note any effects upon competition): None
(b) Reporting and paperwork requirements: None
(2) Effects on the promulgating administrative body:
(a) Direct and indirect costs or savings:
1. First year: None
2. Continuing costs or savings: None
3. Additional factors increasing or decreasing costs: None
(b) Reporting and paperwork requirements: None
(3) Assessment of anticipated effect on state and local revenues: None
(4) Assessment of alternative methods; reasons why alternatives were rejected: None
(5) Identify any statute, administrative regulation or government policy which may be in conflict, overlapping, or duplication: None
(a) Necessity of proposed regulation if in conflict: N/A
(b) If in conflict, was effort made to harmonize the proposed administrative regulation with conflicting provisions: N/A
(6) Any additional information or comments: None

Tiering:
Was tiering applied? No. All claimants treated equally.

CABINET FOR HUMAN RESOURCES
Department for Employment Services
(Proposed Amendment)

903 KAR 5:270. Maximum weekly benefit rates.

RELATES TO: KRS 341.380
PURSUANT TO: KRS 194.050, 341.380
NECESSITY AND FUNCTION: KRS 341.380 requires the Secretary for Human Resources to determine the average weekly wage for insured employment. Fifty-five (55) percent of this amount adjusted to the nearest multiple of one (1) dollar constitutes the maximum weekly unemployment insurance benefit rate for those workers whose benefit year commences on or after July 1, 1986 [1985], and prior to July 1, 1987 [1986]. This regulation applies the mathematical computation required by statute and contains the determination of the maximum weekly benefit rate.

Section 1. The secretary finds the following to exist:
(1) The "total monthly employment" reported by subject employers for the calendar year of 1985 [1984] was 13,894,786 [13,455,245];
(2) The "average monthly employment," obtained by dividing the total monthly employment by twelve (12), was 1,157,899 [1,121,070];
(3) The "total wages" reported by subject employers for the calendar year of 1985 [1984] was $19,399,262,305 [$18,453,034,358];
(4) The "average weekly wage" for the calendar year of 1985 [1984] for insured employment, obtained by dividing the average monthly employment into total wages for such year and dividing by fifty-two (52), was $322.19 [$316.54];
(5) Fifty-five (55) percent of the average weekly wage of $322.19 [$316.54] for the calendar year of 1985 [1984] was $177.20 [$174.10];
(6) However, the "trust fund balance" as of December 31, 1985 [1984], was $76,598,469.22 [zero, (the outstanding loan from the Federal Unemployment Trust Fund was $11,067,384)] and KRS 341.380 states that if the trust fund balance on December 31 is less than $120,000,000 the maximum weekly benefit rate shall not exceed the prior year's maximum weekly benefit rate; and
(7) The prior year's maximum weekly benefit rate was $140.

Section 2. On the basis of the above findings, and in accordance with KRS 341.380(3), the maximum weekly benefit rate for those workers whose benefit year commences on or after the first day of July, 1986 [1985], and prior to the first day of July, 1987 [1986], is determined to be $140.

JAMES P. DANIELS, Commissioner
E. AUSTIN, JR., Secretary
APPROVED BY AGENCY: June 3, 1986
FILED WITH LRC: June 13, 1986 at noon
PUBLIC HEARING SCHEDULED: A public hearing on this regulation has been scheduled for July 21, 1986, at 9 a.m. in the Health Services Auditorium, 275 East Main Street, Frankfort, Kentucky. However, this hearing will be cancelled unless interested persons notify the following office in writing by July 16, 1986, of their desire to appear and testify at the hearing: Ryan Halloran, Acting General Counsel, Office of General Counsel, Cabinet for Human Resources, 275 East Main Street, Frankfort, Kentucky 40621.

REGULATORY IMPACT ANALYSIS

Agency Contact Person: James Daniels
(1) Type and number of entities affected: All eligibile U.I. recipients for the year 7-1-86 through 6-30-87.
(a) Direct and indirect costs or savings to those affected:
1. First year: None
2. Continuing costs or savings: None
3. Additional factors increasing or decreasing costs (note any effects upon competition): None
(b) Reporting and paperwork requirements: None
(2) Effects on the promulgating administrative body:
(a) Direct and indirect costs or savings: None
1. First year:
2. Continuing costs or savings:
3. Additional factors increasing or decreasing costs:
(b) Reporting and paperwork requirements: None
(3) Assessment of anticipated effect on state and local revenues: None
(4) Assessment of alternative methods; reasons why alternatives were rejected: N/A
(5) Identify any statute, administrative regulation or government policy which may be in conflict, overlapping, or duplication: None
(a) Necessity of proposed regulation if in conflict:
(b) If in conflict, was effort made to harmonize the proposed administrative regulation with conflicting provisions:
(6) Any additional information or comments: This regulation satisfies the statutory requirement of KRS 341.380(3), which mandates that the secretary determines the maximum weekly rate prior to July 1, each year.

Tiering:
Was tiering applied? No. All claimants treated equally.

CABINET FOR HUMAN RESOURCES
Department for Social Insurance
Division of Management & Development
(Proposed Amendment)

904 KAR 3:045. Coupon issuance procedures.

RELATES TO: KRS 194.050
PURSUANT TO: KRS 194.050
NECESSITY AND FUNCTION: The Cabinet for Human Resources has responsibility to administer a Food Stamp Program as prescribed by the Food Stamp Act of 1977, as amended, and 7 CFR Part 270 through 280. KRS 194.050 provides that the secretary shall, by regulation, develop policies and operate programs concerned with the welfare of the citizens of the Commonwealth. This regulation sets forth coupon issuance procedures used by the cabinet in the administration of the Food Stamp Program.

Section 1. Basic Issuance Requirements. The cabinet is responsible for the timely and accurate issuance of coupons to eligible households. In issuing coupons the cabinet must insure that:
(1) Only certified households receive benefits;
(2) Coupons are accepted, stored, and protected after delivery to receiving points within the state;
(3) Program benefits are distributed in the correct amounts; and
(4) Coupon issuance and reconciliation activities are properly conducted in accordance with 7 CFR Part 274 and accurately reported to the Food and Nutrition Service.

Section 2. Issuance System. The cabinet shall choose one (1) of the following systems to issue coupons to eligible households:
(1) Direct delivery is a system wherein eligible households pick up and redeem their ATP card at a specified issuance center. Regular mail issuance shall be available to those households which are unable to get to their assigned issuance centers, as determined by the cabinet.
(2) Direct mail is a system wherein coupons are mailed, using at least first class mail, directly to the eligible household.
(3) Alternate issuance is a system used, in accordance with 7 CFR 274.3(c)(3), when circumstances exist which indicate a household may not receive their benefits through the normal issuance system.
(a) Local office pickup is a system whereby a household's benefits are mailed to the local office for the household to pick up.
(b) Certified mail is a system whereby benefits are sent via the postal system and must be signed for before they are obtained.
(c) As determined by the cabinet, other issuance systems may be utilized to ensure receipt of benefits by the eligible household.

Section 3. Issuance Cycles. (1) For ongoing cases the monthly coupon packet/ATP card is mailed to the household/issuance center over the first ten (10) to twenty (20) days of the issuance month, based on the last digit of the recipient's social security number.
(2) New approvals, reapprovals and current month recertifications shall have their coupon packet/ATP card mailed to their home/issuance

center within thirty (30) days after the date of application in accordance with 7 CFR 273.2(g)(2).

(a) Households eligible for expedited service shall have their coupon packet/ATP card [mailed or] made available for pick-up no later than the close of business on the fifth calendar day after the date of application.

(b) Residents of drug addiction/alcoholic treatment centers and group living arrangement facilities eligible for expedited service shall have their coupon packet/ATP card made available no later than seven (7) days after the date of application.

Section 4. Replacement Issuances. A total of only two (2) replacements of any kind shall be made during a six (6) month period, except as specified in subsection 4 of this section. Replacements will be issued in accordance with 7 CFR Parts 273.11(i), 274.2(h) and 274.3(c) as follows:

(1) Non-receipt of coupons/ATP cards must be reported in the period of intended use. Replacements shall be issued no more than ten (10) days after report of non-delivery is received and shall be limited to two (2) times during a six (6) month period. If coupons/ATP cards were returned to central office, non-receipt did not occur and the limit stated above does not apply.

(2) Destruction, in an individual household disaster, of coupons/ATP cards after receipt must be reported within ten (10) days of the incident or within the period of intended use, whichever is earlier. Replacements shall be issued within ten (10) days of receipt of request and shall be limited to one (1) time during a six (6) month period. Where FNS has issued a disaster declaration and the household is eligible for emergency food stamp benefits the household shall not receive both the disaster allotment and a replacement allotment under this provision.

(3) Theft of ATP cards after receipt must be reported within ten (10) days of the incident or within the period of intended use, whichever is earlier. Replacements shall be issued within ten (10) days of receipt of request and shall be limited to one (1) time during a six (6) month period.

(4) Improperly manufactured or mutilated coupons shall be replaced with an amount equal to the affected coupons in accordance with 7 CFR Part 273.11(i)(5). There is no limit on the number of times this type of replacement may be made.

(5) Effective April 1, 1985, mutilated ATP cards which are identifiable as being for the current month, belonging to the household which requested the replacement, and which have not expired, shall be replaced provided the request for replacement was made during the period of intended use. Mutilated ATP cards which are not identifiable shall be considered as lost and not replaceable.

(6) Food purchased with food stamps which is subsequently destroyed in an individual disaster, as well as in a natural disaster affecting more than one (1) household, which affects the participating household, may be eligible for replacement of the actual value of loss, not to exceed one (1) month's food stamp allotment. The disaster must be reported within ten (10) days and verified. A replacement shall be issued or the opportunity to obtain a replacement given within ten (10) days of the reported loss and shall be limited to two (2) times during a six (6) month period. Where FNS has issued a disaster declaration and the household is eligible for emergency food stamp benefits the household shall not receive both the disaster allotment and a replacement allotment under this provision.

Section 5. Authorization-to-Participate Card. The ATP card is used in areas participating in a direct delivery system.

(1) Effective July 1, 1985 the ATP card shall be valid for the entire month of issuance unless it is issued after the twentieth day of the month. Those issued after that date are valid through the last day of the following month.

(2) The household shall be provided with a means of designating an emergency authorized representative who can transact the ATP card in their stead.

Section 6. Coupon Controls. Regardless of which issuance system is used, the cabinet shall:

(1) Establish a coupon inventory management system which insures that coupons are requisitioned and inventories are maintained in accordance with 7 CFR Parts 274.4(a);

(2) Establish control and security procedures to safeguard coupons similar to those used to protect currency outlined in 7 CFR Part 274.4(b);

(3) Arrange for the ordering of coupons and the prompt verification and written acceptance of each coupon shipment in accordance with 7 CFR Part 274.4(c);

(4) Ensure that coupon issuers and bulk storage points promptly verify and acknowledge, in writing, the contents of each coupon shipment or coupon transfer delivered to them and shall be responsible for the custody, care, control and storage of coupons pursuant to 7 CFR Part 274.5;

(5) Maintain issuance records for a period of three (3) years from the month of origin as outlined in 7 CFR Part 274.7;

(6) Control all issuance documents which establish household eligibility while the documents are transferred and processed within the state agency in accordance with 7 CFR Part 274.7(b); and

(7) Provide security and control for all issuance accountability documents pursuant to 7 CFR Part 274.7(c).

MIKE ROBINSON, Commissioner
E. AUSTIN, JR., Secretary
APPROVED BY AGENCY May 16, 1986
FILED WITH LRC: June 6, 1986 at 11 a.m.

PUBLIC HEARING SCHEDULED: A public hearing on this regulation has been scheduled for July 21, 1986 at 9 a.m. in the Department for Health Services Auditorium, 275 East Main Street, Frankfort, Kentucky. However, this hearing will be cancelled unless interested persons notify the following office in writing by July 16, 1986 of their desire to appear and testify at the hearing: Ryan Halloran, Acting General Counsel, Cabinet for Human Resources, 275 East Main Street, 4 West, Frankfort, Kentucky 40621.

REGULATORY IMPACT ANALYSIS

Agency Contact Person: Roy Butler
(1) Type and number of entities affected: Households eligible for expedited service in some instances will have their coupon/ATP cards mailed one day earlier.
(a) Direct and indirect costs or savings to those affected: None
1. First year:
2. Continuing costs or savings:
3. Additional factors increasing or decreasing costs (note any effects upon competition):
(b) Reporting and paperwork requirements: None
(2) Effects on the promulgating administrative body: None
(a) Direct and indirect costs or savings:
1. First year:
2. Continuing costs or savings:
3. Additional factors increasing or decreasing costs:
(b) Reporting and paperwork requirements:
(3) Assessment of anticipated effect on state and local revenues: None
(4) Assessment of alternative methods; reasons why alternatives were rejected: N/A
(5) Identify any statute, administrative regulation or government policy which may be in conflict, overlapping, or duplication: None
(a) Necessity of proposed regulation if in conflict:
(b) If in conflict, was effort made to harmonize the proposed administrative regulation with conflicting provisions:
(6) Any additional information or comments: None

Tiering:
Was tiering applied? No. Not applicable.

PROPOSED REGULATIONS RECEIVED THROUGH JUNE 15

KENTUCKY HIGHER EDUCATION ASSISTANCE AUTHORITY

11 KAR 5:031. Repeal of regulations.

RELATES TO: KRS 164.740 to 164.785
PURSUANT TO: KRS 164.748(4)
NECESSITY AND FUNCTION: The Kentucky Higher Education Assistance Authority (authority) administers programs of student grants pursuant to KRS 164.740 through KRS 164.785. The administrative procedures and requirements pertaining to the authority and participating institutions are delineated in the KHEAA Grant Program Manual, which is incorporated by reference and thereby made regulatory pursuant to 11 KAR 5:010. Said manual is distributed by the authority to participating institutions and made available to students. The purpose of this regulation is to repeal specific regulations that are duplicative of rules delineated in the KHEAA Grant Program Manual, and thereby preclude the possibility of error, duplicity, or conflict when modifications to program requirements are made from time to time.

Section 1. The provisions of 11 KAR 5:032, 5:035, 5:060, 5:070, 5:080, 5:085, 5:090, and 5:100 are hereby repealed.

PAUL P. BORDEN, Executive Director
APPROVED BY AGENCY: April 22, 1986
FILED WITH LRC: May 29, 1986 at 11 a.m.
PUBLIC HEARING SCHEDULED: A public hearing regarding this regulation is scheduled to be held at 1050 U.S. 127 South, Frankfort, Kentucky, on Wednesday, July 30, 1986, at 10 a.m. Any interested persons wishing to comment or attend the hearing pursuant to KRS Chapter 13A must submit their written comments or statement of intent to attend to: The Executive Director, Kentucky Higher Education Assistance Authority, 1050 U.S. 127 South, Frankfort, Kentucky 40601, no later than Friday, July 25, 1986. Absent such response from the public, the hearing may be cancelled.

REGULATORY IMPACT ANALYSIS

Agency Contact Person: Richard F. Casey
(1) Type and number of entities affected: An undetermined number of grant applicants.
(a) Direct and indirect costs or savings to those affected: None
1. First year:
2. Continuing costs or savings:
3. Additional factors increasing or decreasing costs (note any effects upon competition):
(b) Reporting and paperwork requirements:
(2) Effects on the promulgating administrative body: None
(a) Direct and indirect costs or savings:
1. First year:
2. Continuing costs or savings:
3. Additional factors increasing or decreasing costs:
(b) Reporting and paperwork requirements:
(3) Assessment of anticipated effect on state and local revenues: N/A
(4) Assessment of alternative methods; reasons why alternatives were rejected: N/A
(5) Identify any statute, administrative regulation or government policy which may be in conflict, overlapping, or duplication: N/A
(a) Necessity of proposed regulation if in conflict:
(b) If in conflict, was effort made to harmonize the proposed administrative regulation with conflicting provisions:
(6) Any additional information or comments: This regulation repeals regulations which are duplicative of rules outlined in the KHEAA Grant Program Manual.

Tiering:
Was tiering applied? No. This regulation merely repeals existing regulations and imposes no regulatory burden on any entity.

KENTUCKY HIGHER EDUCATION ASSISTANCE AUTHORITY

11 KAR 7:020. Deferment.

RELATES TO: KRS 156.611
PURSUANT TO: KRS 156.611, 164.748(4)
NECESSITY AND FUNCTION: KRS 156.611 establishes the Math/Science Incentive Loan Program and provides that the Kentucky Higher Education Assistance Authority (authority) may permit deferment of repayment for cause. This regulation defines "deferment" and establishes conditions under which specified types of deferments may be approved by the authority.

Section 1. Definitions. Unless otherwise specified, the words and phrases used herein shall have the same meaning as set forth in 11 KAR 7:010. "Deferment" means a temporary waiver of the obligation of a Math/Science Incentive Loan recipient to make payments to the authority, pursuant to one (1) or more promissory notes executed between the recipient and the authority, which is granted by the authority, for a specified period of time, upon a showing of cause by the recipient.

Section 2. Request for Deferment. The recipient must request a deferment in writing by submitting complete and accurate information on a form prescribed by the authority. The recipient's submission of a request for deferment shall constitute authorization for the authority to request and receive such verification of facts represented by the recipient as may be deemed necessary by the authority.

Section 3. Effect on Repayments. During a deferment, no principal or interest repayments shall be required but interest shall continue to accrue on the unpaid principal balance owed by the recipient. Nothing contained herein shall require the authority to grant a deferment if such deferment would legally impair the ultimate recovery of the principal and accrued interest otherwise owed by the recipient. If, during a deferment, the recipient resumes full-time enrollment in a teacher education program leading to certification in a critical shortage field at a participating institution or renders qualified teaching service, then the deferment shall nullify the commencement of repayment, such that any promissory note so deferred may be subsequently cancelled in accordance with KRS 156.611 and 11 KAR 7:010.

Section 4. Types of Deferments. The following deferments may be granted by the authority:

(1) Enrollment deferment. A deferment granted to a recipient who is enrolled on at least a half-time basis at a business school, college, vocational school or school of nursing (as those terms are defined in KRS 164.740) in the United States. The recipient must provide to the authority, at least annually, evidence of such enrollment on properly completed forms provided by the authority.

(2) Disability deferment. A deferment granted to a recipient who is temporarily totally disabled and, therefore, unable to obtain any full-time employment or to attend school; or, a deferment granted to a recipient who is unable to obtain any full-time employment or attend school due to the temporary total disability of the recipient's spouse who requires continuous (twenty-four (24) hour) nursing or similar care by the recipient. For purposes of this deferment, a recipient, or the spouse of a recipient, is temporarily totally disabled if he/she suffers an injury or illness which necessitates an extended or indefinite period of recovery which can be expected to preclude gainful employment or school attendance and, in the case of a recipient's spouse, he/she is not confined to a hospital, nursing home, intermediate care facility, or similar institution. The recipient must provide to the authority a statement from a licensed physician certifying that the recipient or spouse is temporarily totally disabled in accordance with the preceding terms and conditions. The recipient is solely responsible for securing the physician's certifications. This deferment may, at the authority's discretion, be granted for a period not to exceed three (3) years, subject to annual review of a physician's certification. After the third year of any deferment, pursuant to this subsection, the authority may, in its sole discretion, cancel the debt.

(3) Unemployment deferment.

(a) A recipient seeking, but unable to obtain, a qualified teaching service position within six (6) months following completion of a qualified teacher education program at a participating institution may be granted a single deferment for a period not to exceed one (1) year. The recipient must have applied for a qualified teaching service position with at least three (3) public school districts and must not have refused an offer of employment in a qualified teaching service position in such public school districts or in any other public school districts to which the recipient may have applied, and must provide the authority a signed statement which sets forth:

1. The recipient's current address;
2. The names of public school districts to which the recipient has applied for qualified teaching service employment; and,
3. The recipient's agreement to notify the authority when he/she obtains full-time employment in a qualified teaching service position; or,

(b) A recipient seeking, but unable to obtain, any full-time (at least thirty (30) hours per week) employment may be granted a single deferment for a period not to exceed one (1) year. The recipient must provide, on the form prescribed by the authority, a signed statement which sets forth:

1. The recipient's current address;
2. Certification that the recipient has registered with a public or private employment agency, if one is accessible, specifying the name and address of such agency; and,
3. The borrower's agreement to notify the authority within thirty (30) days of a date upon which he/she obtains full-time employment.

If full-time employment is obtained at any time during the period of a deferment approved pursuant to this section, such deferment shall be immediately terminated.

(c) The immediately preceding subsections of this section are alternative ways to qualify for a single deferment for a period not to exceed one (1) year. Pursuant to subsection (1) of this section, a recipient, who is seeking, but unable

to obtain, a qualified teaching service position, may receive a deferment even if employed full-time in another type of position. Pursuant to paragraph (b) of this subsection, a recipient, who is not actively seeking a qualified teaching service position, may receive a deferment only if actively seeking and unable to obtain any type of full-time employment.

(4) Parenting deferment. A deferment may be granted by the authority when a recipient interrupts qualified teaching service or enrollment in a qualified teacher education program at a participating institution under an approved leave of absence for purposes of rearing a preschool age child. The borrower must provide to the authority a statement, signed by an authorized representative of the public school district or participating institution, evidencing that such a leave of absence has been approved for the recipient. This deferment shall remain in effect during the period of the leave of absence not to exceed two (2) years. The recipient is solely responsible for securing, at least annually, the required verification of an approved leave of absence.

(5) Hardship deferment. If enrollment in a teacher education program leading to certification in a critical shortage field or employment in a qualified teaching service position is temporarily interrupted due to circumstances beyond the recipient's control, including, but not limited to, illness, accident or death in the family, after which the recipient intends to resume such enrollment or qualified teaching service position, then the authority may determine that a hardship exists and may grant a single deferment of a period not in excess of one (1) year.

(6) Qualified teaching service deferment. Deferments may be granted, from time to time, to a recipient who, due to current employment in a qualified teaching service position, may reasonably be expected, solely with the passage of six (6) months or less time, to qualify for cancellation benefits pursuant to 11 KAR 8:010.

PAUL P. BORDEN, Executive Director
APPROVED BY AGENCY: April 22, 1986
FILED WITH LRC: May 29, 1986 at 11 a.m.
PUBLIC HEARING SCHEDULED: A public hearing regarding this regulation is scheduled to be held at 1050 U.S. 127 South, Frankfort, Kentucky, on Wednesday, July 30, 1986, at 10 a.m. Any interested persons wishing to comment or attend the hearing pursuant to KRS Chapter 13A must submit their written comments or statement of intent to attend to: The Executive Director, Kentucky Higher Education Assistance Authority, 1050 U.S. 127 South, Frankfort, Kentucky 40601, no later than Friday, July 25, 1986. Absent such response from the public, the hearing may be cancelled.

REGULATORY IMPACT ANALYSIS

Agency Contact Person: Richard F. Casey
(1) Type and number of entities affected: Undetermined number of recipients of Math/Science Incentive Loans.
(a) Direct and indirect costs or savings to those affected: N/A
1. First year:
2. Continuing costs or savings:
3. Additional factors increasing or decreasing costs (note any effects upon competition):
(b) Reporting and paperwork requirements: Negligible. Completion and submission of a single page Request for Deferment at not less than six month intervals.
(2) Effects on the promulgating administrative body:
(a) Direct and indirect costs or savings:
1. First year: N/A
2. Continuing costs or savings: N/A
3. Additional factors increasing or decreasing costs: N/A
(b) Reporting and paperwork requirements: Minimal - those associated with routine administration of a student financial assistance program.
(3) Assessment of anticipated effect on state and local revenues: None
(4) Assessment of alternative methods; reasons why alternatives were rejected: No viable alternatives.
(5) Identify any statute, administrative regulation or government policy which may be in conflict, overlapping, or duplication: N/A
(a) Necessity of proposed regulation if in conflict:
(b) If in conflict, was effort made to harmonize the proposed administrative regulation with conflicting provisions:
(6) Any additional information or comments: Deferment provisions are identical to those prescribed for the Teacher Scholarship Program by 11 KAR 8:020.

Tiering:
Was tiering applied? No. Tiering unwarranted. Regulation provides potential benefits to all borrowers on equal basis.

KENTUCKY HIGHER EDUCATION ASSISTANCE AUTHORITY

11 KAR 8:010. Teacher scholarship program.

RELATES TO: KRS 156.613
PURSUANT TO: KRS 156.613, 164.748(4)
NECESSITY AND FUNCTION: KRS 156.613 established the Teacher Scholarship Program to encourage academically talented students to become teachers in the public schools of the Commonwealth. This regulation prescribes rules for the administration of the Teacher Scholarship Program.

Section 1. The Kentucky Higher Education Assistance Authority (authority) shall, to the extent of appropriations for such purpose, award teacher scholarships to persons enrolled or accepted for enrollment on a full-time basis at participating institutions of higher education, approved by the State Board of Education to offer teacher education programs, who declare an intention to enter the teaching profession in the public schools of the Commonwealth, and who meet the eligibility requirements set forth herein.

Section 2. Definitions. (1) "Public school" means a common school operated under the laws of the Commonwealth of Kentucky.
(2) "Semester" means a period of about eighteen (18) weeks, which usually makes up one-half (1/2) of a public school year or one-half (1/2) of a participating institution's

academic year.

(3) "Qualified teaching service" means employment in a public school in a position requiring a Kentucky Teacher's Certificate for a major portion of a school day for at least seventy (70) days during a semester.

(4) "Participating institution" means an institution of higher education located in Kentucky, which is approved by the State Board of Education to offer teacher education programs, and which has in force an agreement with the authority providing for administration of this program.

Section 3. Eligibility Criteria. Graduates of a high school, located in Kentucky, who rank academically in the top ten (10) percent of their graduating class, or who score at or above the 80th percentile on a test required for admission to the Commonwealth's public institutions of higher education, shall be eligible to apply for a teacher scholarship.

Section 4. Selection Criteria. Recipient selection will be made on the basis of the following weighted criteria: rank in class (forty (40) percent), grade point average (forty (40) percent), percentile score on the test required for admission to the Commonwealth's public institutions of higher education (twenty (20) percent). (Test scores of applicants from minority population groups will be measured relative to the scores of such minority population groups.) If funds are insufficient to award all applicants, the scholarships shall first be awarded to those qualifying applicants who previously received scholarships. If funds are insufficient to award all prior recipients who are qualified applicants, then scholarships shall be prorated in accordance with the cumulative amount previously received by such applicants. If funds are sufficient to award new applicants, an award shall be made first to the applicant with the highest score on the selection criteria and, thereafter, in a descending order to persons having lower scores until all available funds are awarded. Once all the criteria have been evaluated and two (2) or more applicants are equally ranked, selection between the applicants will be made on the basis of the date the application is received by the authority.

Section 5. Renewal. Teacher scholarships shall be renewed annually upon application for a maximum of three (3) years of undergraduate study for those who maintain at least the equivalent of a 2.5 cumulative grade point average on a scale of 4.0 and provided that the recipient, when first eligible, enrolls in a teacher education program and, thereafter, continues to be enrolled on a full-time basis in such a program. Awards for summer school attendance shall be made upon separate application.

Section 6. Award Maximums. The maximum teacher scholarship award for a summer session shall be $1,250; for a semester shall be $2,500; or, for an academic year (exclusive of a summer session) shall be $5,000. The aggregate maximum of teacher scholarship awards shall not exceed $20,000 per individual. Awards shall not exceed the student's total cost of attendance as determined by the participating institution.

Section 7. Disbursements. Disbursement of teacher scholarships shall be made at the beginning of each semester or summer session and each such disbursement shall be evidenced by a promissory note, prescribed by the authority, in which the scholarship recipient shall agree to repay the scholarship funds or render qualified teaching service in lieu thereof.

Section 8. Notifications. Recipients shall notify the authority within thirty (30) days of:

(1) Change in enrollment status;

(2) Cessation of enrollment in a teacher education program;

(3) Employment in a qualified teaching service position; or,

(4) Change of address.

Section 9. Withdrawals. Scholarship recipients who, prior to completion, cease to be enrolled on a full-time basis in a teacher education program at a participating institution, shall immediately become liable for the repayment to the authority of the sum of all teacher scholarship funds received plus interest accrued thereon unless such recipient has an approved deferment pursuant to 11 KAR 8:020.

Section 10. Repayment. Recipients who do not begin employment in a qualified teaching service position within the six (6) month period following completion of a teacher education program in a participating institution (excluding periods of deferment pursuant to 11 KAR 8:020) shall immediately become liable to the authority for repayment of principal and interest accrued, pursuant to the earliest promissory note then outstanding. In each semester thereafter, during which a recipient does not render qualified teaching service, repayment of an additional promissory note shall become due, proceeding sequentially from the promissory note have the earliest date to the most recent date.

Section 11. Repayment Schedule. Written notification of demand for repayment shall be sent by the authority to the scholarship recipient's last known address and shall be effective upon mailing. The authority may agree, in its sole discretion, to accept repayment in installments in accordance with a schedule established by the authority. In the event that more than one (1) promissory note has come due for repayment and remains unpaid, then payments shall first be applied to the earliest unpaid promissory note. Payments shall be applied first to accrued interest and then to principal.

Section 12. Cancellation. In order to receive cancellation of a promissory note and the interest accrued thereon, a scholarship recipient must render qualified teaching service in a public school during a semester. One (1) such promissory note shall be cancelled for each semester during which qualified teaching service is verified to the authority. Such cancellations of promissory notes shall be in sequential order beginning with the earliest promissory note. Verification of qualified teaching service shall be submitted to the authority in writing, signed by the local school district superintendent or

building principal, within thirty (30) days of the date a scholarship recipient completes such qualified teaching service.

Section 13. Interest. The interest rate on scholarship funds shall be twelve (12) percent per annum simple interest. Interest accruing on the unpaid principal of each promissory note shall be computed from the date of disbursement of the respective promissory note, and such interest shall continue to accrue until the promissory note is paid in full pursuant to Section 11 of this regulation or cancelled in full pursuant to Section 12 of this regulation. In the event that the scholarship is not repaid or cancelled in accordance with the terms of the promissory note and related repayment schedules, if any, and judgment is rendered on the debt, then the annual interest rate shall, from the date of such judgment, be increased to nineteen (19) percent per annum simple interest.

Section 14. Records. A participating institution shall maintain complete and accurate records pertaining to the eligibility, enrollment and progress of students receiving aid under this program and the disbursement of funds and institutional charges as may be necessary to audit the disposition of funds hereunder. Such records shall be maintained for at least five (5) years after the student ceases to be enrolled at the institution.

Section 15. Refunds. A participating institution shall refund to the authority, within forty (40) days of a recipient's last date of attendance, any amount attributable to this program which is determined to be due under the institution's refund policy.

Section 16. Information Dissemination and Recruitment. The authority shall disseminate information through high school counselors and school superintendents about this program to potential recipients. Participating institutions shall provide assurances that program information will be disseminated to freshmen and sophomores enrolled at that institution. Participating institutions shall actively recruit students from minority population groups for participation in this program.

PAUL P. BORDEN, Executive Director
APPROVED BY AGENCY: April 22, 1986
FILED WITH LRC: May 29, 1986 at 11 a.m.
PUBLIC HEARING SCHEDULED: A public hearing regarding this regulation is scheduled to be held at 1050 U.S. 127 South, Frankfort, Kentucky, on Wednesday, July 30, 1986, at 10 a.m. Any interested persons wishing to comment or attend the hearing pursuant to KRS Chapter 13A must submit their written comments or statement of intent to attend to: The Executive Director, Kentucky Higher Education Assistance Authority, 1050 U.S. 127 South, Frankfort, Kentucky 40601, no later than Friday, July 25, 1986. Absent such response from the public, the hearing may be cancelled.

REGULATORY IMPACT ANALYSIS

Agency Contact Person: Richard F. Casey
(1) Type and number of entities affected: 23 Kentucky postsecondary educational institutions offering programs in teacher certification and undetermined number of applicants.
(a) Direct and indirect costs or savings to those affected:
1. First year: Negligible
2. Continuing costs or savings: Negligible
3. Additional factors increasing or decreasing costs (note any effects upon competition):
(b) Reporting and paperwork requirements: Negligible
(2) Effects on the promulgating administrative body:
(a) Direct and indirect costs or savings: None
1. First year: $500,000 plus costs related to program administration - all funded from agency receipts.
2. Continuing costs or savings: Second year - $1,000,000 plus costs related to program administration - all funded from agency receipts.
3. Additional factors increasing or decreasing costs:
(b) Reporting and paperwork requirements: Those associated with administration of a student financial assistance program.
(3) Assessment of anticipated effect on state and local revenues: None
(4) Assessment of alternative methods; reasons why alternatives were rejected: No viable alternatives.
(5) Identify any statute, administrative regulation or government policy which may be in conflict, overlapping, or duplication: None
(a) Necessity of proposed regulation if in conflict:
(b) If in conflict, was effort made to harmonize the proposed administrative regulation with conflicting provisions:
(6) Any additional information or comments: This program is centrally administered by KHEAA. The regulation establishes various program participation requirements.

Tiering:
Was tiering applied? No. No burden is imposed by this regulation. It merely establishes program participation standards applicable to all on an equal basis.

KENTUCKY HIGHER EDUCATION ASSISTANCE AUTHORITY

11 KAR 8:020. Deferment.

RELATES TO: KRS 156.613
PURSUANT TO: KRS 156.613, 164.748(4)
NECESSITY AND FUNCTION: KRS 156.613 establishes the Teacher Scholarship Program and provides that the Kentucky Higher Education Assistance Authority (authority) may permit deferment of repayment for cause. This regulation defines "deferment" and establishes conditions under which specified types of deferments may be approved by the authority.

Section 1. Definitions. Unless otherwise specified, the words and phrases used herein shall have the same meaning as set forth in 11 KAR 8:010. "Deferment" means a temporary waiver of the obligation of a teacher scholarship recipient to make payments to the authority, pursuant to one or more promissory notes executed between the recipient and the authority, which is granted by the authority, for a specified period of time, upon a showing

of cause by the recipient.

Section 2. Request for Deferment. The recipient must request a deferment in writing by submitting complete and accurate information on a form prescribed by the authority. The recipient's submission of a request for deferment shall constitute authorization for the authority to request and receive such verification of facts represented by the recipient as may be deemed necessary by the authority.

Section 3. Effect on Repayments. During a deferment, no principal or interest repayments shall be required but interest shall continue to accrue on the unpaid principal balance owed by the recipient. Nothing contained herein shall require the authority to grant a deferment if such deferment would legally impair the ultimate recovery of the principal and accrued interest otherwise owed by the recipient. If, during a deferment, the recipient resumes full-time enrollment in a teacher education program at a participating institution or renders qualified teaching service, then the deferment shall nullify the commencement of repayment, such that any promissory note so deferred may be subsequently cancelled in accordance with KRS 156.613 and 11 KAR 8:010.

Section 4. Types of deferments. The following deferments may be granted by the authority:

(1) Enrollment deferment. A deferment granted to a recipient who is enrolled on at least a half-time basis at a business school, college, vocational school or school of nursing (as those terms are defined in KRS 164.740) in the United States. The recipient must provide to the authority, at least annually, evidence of such enrollment on properly completed forms provided by the authority.

(2) Disability deferment. A deferment granted to a recipient who is temporarily totally disabled and, therefore, unable to obtain any full-time employment or to attend school; or, a deferment granted to a recipient who is unable to obtain any full-time employment or attend school due to the temporary total disability of the recipient's spouse who requires continuous (twenty-four (24) hour) nursing or similar care by the recipient. For purposes of this deferment, a recipient, or the spouse of a recipient, is temporarily totally disabled if he/she suffers an injury or illness which necessitates an extended or indefinite period of recovery which can be expected to preclude gainful employment or school attendance and, in the case of a recipient's spouse, he/she is not confined to a hospital, nursing home, intermediate care facility, or similar institution. The recipient must provide to the authority a statement from a licensed physician certifying that the recipient or spouse is temporarily totally disabled in accordance with the preceding terms and conditions. The recipient is solely responsible for securing the physician's certifications. This deferment may, at the authority's discretion, be granted for a period not to exceed three (3) years, subject to annual review of a physician's certification. After the third year of any deferment, pursuant to this subsection, the authority may, in its sole discretion, cancel the debt.

(3) Unemployment deferment.

(a) A recipient seeking, but unable to obtain, a qualified teaching service position within six (6) months following completion of a teacher education program at a participating institution may be granted a single deferment for a period not to exceed one (1) year. The recipient must have applied for a qualified teaching service position with at least three (3) public school districts and must not have refused an offer of employment in a qualified teaching service position in such public school districts or in any other public school districts to which the recipient may have applied, and must provide the authority a signed statement which sets forth:

1. The recipient's current address;
2. The names of public school districts to which the recipient has applied for qualified teaching service employment; and
3. The recipient's agreement to notify the authority when he/she obtains full-time employment in a qualified teaching service position; or

(b) A recipient seeking, but unable to obtain, any full-time (at least thirty (30) hours per week) employment may be granted a single deferment for a period not to exceed one (1) year. The recipient must provide, on the form prescribed by the authority, a signed statement which sets forth:

1. The recipient's current address;
2. Certification that the recipient has registered with a public or private employment agency, if one is accessible, specifying the name and address of such agency; and
3. The borrower's agreement to notify the authority within thirty (30) days of a date upon which he/she obtains full-time employment.

If full-time employment is obtained at any time during the period of a deferment approved pursuant to this section, such deferment shall be immediately terminated.

(c) The immediately preceding subsections of this section are alternative ways to qualify for a single deferment for a period not to exceed one (1) year. Pursuant to paragraph (a) of this subsection, a recipient, who is seeking, but unable to obtain, a qualified teaching service position, may receive a deferment even if employed full-time in another type of position. Pursuant to paragraph (b) of this subsection, a recipient, who is not actively seeking a qualified teaching service position, may receive a deferment only if actively seeking and unable to obtain any type of full-time employment.

(4) Parenting deferment. A deferment may be granted by the authority when a recipient interrupts qualified teaching service or enrollment in a teacher education program at a participating institution under an approved leave of absence for purposes of rearing a preschool age child. The borrower must provide to the authority a statement, signed by an authorized representative of the public school district or participating institution, evidencing that such a leave of absence has been approved for the recipient. This deferment shall remain in effect during the period of the leave of absence not to exceed two (2) years. The recipient is solely responsible for securing, at least annually, the required verification of an approved leave of absence.

(5) Hardship deferment. If enrollment in a teacher education program or employment in a

qualified teaching service position is temporarily interrupted due to circumstances beyond the recipient's control, including, but not limited to, illness, accident or death in the family, after which the recipient intends to resume such enrollment or qualified teaching service position, then the authority may determine that a hardship exists and may grant a single deferment of a period not in excess of one (1) year.

(6) Qualified teaching service deferment. Deferments may be granted, from time to time, to a recipient who, due to current employment in a qualified teaching service position, may reasonably be expected, solely with the passage of six (6) months or less time, to qualify for cancellation benefits pursuant to 11 KAR 8:010.

PAUL P. BORDEN, Executive Director
APPROVED BY AGENCY: April 22, 1986
FILED WITH LRC: May 29, 1986 at 11 a.m.
PUBLIC HEARING SCHEDULED: A public hearing regarding this regulation is scheduled to be held at 1050 U.S. 127 South, Frankfort, Kentucky, on Wednesday, July 30, 1986, at 10 a.m. Any interested persons wishing to comment or attend the hearing pursuant to KRS Chapter 13A must submit their written comments or statement of intent to attend to: The Executive Director, Kentucky Higher Education Assistance Authority, 1050 U.S. 127 South, Frankfort, Kentucky 40601, no later than Friday, July 25, 1986. Absent such response from the public, the hearing may be cancelled.

REGULATORY IMPACT ANALYSIS

Agency Contact Person: Richard F. Casey
(1) Type and number of entities affected: Undetermined number of recipients of teachers scholarships.
(a) Direct and indirect costs or savings to those affected:
1. First year: N/A
2. Continuing costs or savings: N/A
3. Additional factors increasing or decreasing costs (note any effects upon competition): N/A
(b) Reporting and paperwork requirements: Minimal. Completion and submission of a single page request for deferment at not less than six month intervals.
(2) Effects on the promulgating administrative body: Deferment of payments in some cases may delay repayment of funds but, overall, is expected to improve repayment rate by precluding default.
(a) Direct and indirect costs or savings: Minimal - those associated with routine administration of a student financial assistance program.
1. First year:
2. Continuing costs or savings:
3. Additional factors increasing or decreasing costs:
(b) Reporting and paperwork requirements: Minimal - Those associated with administration of a student financial assistance program.
(3) Assessment of anticipated effect on state and local revenues: None
(4) Assessment of alternative methods; reasons why alternatives were rejected: No viable alternatives.
(5) Identify any statute, administrative regulation or government policy which may be in conflict, overlapping, or duplication: None
(a) Necessity of proposed regulation if in conflict:
(b) If in conflict, was effort made to harmonize the proposed administrative regulation with conflicting provisions:
(6) Any additional information or comments: Deferment provisions are identical to those prescribed for the math/science incentive loan program by 11 KAR 7:020.

Tiering:
Was tiering applied? No. Tiering unwarranted. Regulation provides potential benefits to all borrowers on equal basis.

KENTUCKY HIGHER EDUCATION ASSISTANCE AUTHORITY

11 KAR 9:010. Program.

RELATES TO: KRS 164.744, 164.748(6),(7),(14), 164.753(3), HB 209 of the 1986 General Assembly
PURSUANT TO: KRS 164.748(4), 164.754(3)
NECESSITY AND FUNCTION: The Kentucky Higher Education Assistance Authority has established a program of recognition awards and scholarships to recognize and reward academic excellence. Such recognition awards and scholarships will be offered to students who demonstrate the highest capabilities for successful college study. The purpose of this regulation is to establish the criteria for eligibility and selection of applicants, establish award amounts, and delineate administrative responsibilities under the program.

Section 1. A program of recognition awards and scholarships is hereby established by the Kentucky Higher Education Assistance Authority (KHEAA) to be known as the Kentucky Distinguished Student Recognition and Scholarship Award Program. This program shall be administered in accordance with the 1986-87 Kentucky Distinguished Student Recognition and Scholarship Award Program Guidelines, incorporated herein by reference. A copy of said guidelines shall be provided by KHEAA to all Kentucky high school counselors and participating colleges and universities.

Section 2. In order for an eligible college or university to participate in this program, the institution must execute a participation agreement.

PAUL P. BORDEN, Executive Director
APPROVED BY AGENCY: April 22, 1986
FILED WITH LRC: May 29, 1986 at 11 a.m.
PUBLIC HEARING SCHEDULED: A public hearing regarding this regulation is scheduled to be held at 1050 U.S. 127 South, Frankfort, Kentucky, on Wednesday, July 30, 1986, at 10 a.m. Any interested persons wishing to comment or attend the hearing pursuant to KRS Chapter 13A must submit their written comments or statement of intent to attend to: The Executive Director, Kentucky Higher Education Assistance Authority, 1050 U.S. 127 South, Frankfort, Kentucky 40601, no later than Friday, July 25, 1986. Absent such response from the public, the hearing may be cancelled.

REGULATORY IMPACT ANALYSIS

Agency Contact Person: Richard F. Casey
(1) Type and number of entities affected: An undetermined number of secondary school seniors and all public and private non-profit degree-granting institutions.
(a) Direct and indirect costs or savings to those affected:
1. First year: 50% of that portion of the students cost of attendance, as calculated using program guidelines, for which financial need has been determined, will be provided by the institution.
2. Continuing costs or savings: First year costs are expected to re-occur until graduation.
3. Additional factors increasing or decreasing costs (note any effects upon competition):
(b) Reporting and paperwork requirements: Requirements typically associated with the administration of a financial aid program. Additionally, the chief executive officer is required to submit annual certification of eligibility.
(2) Effects on the promulgating administrative body:
(a) Direct and indirect costs or savings:
1. First year: 100 scholars will each receive a $500 recognition award. KHEAA will provide 50% of remaining demonstrated financial need for the scholars.
2. Continuing costs or savings: KHEAA will continue to provide 50% of demonstrated financial need for scholars in subsequent years.
3. Additional factors increasing or decreasing costs: KHEAA will incur cost typically related to program administration and fund these costs from agency receipts.
(b) Reporting and paperwork requirements:
(3) Assessment of anticipated effect on state and local revenues: None
(4) Assessment of alternative methods; reasons why alternatives were rejected: N/A
(5) Identify any statute, administrative regulation or government policy which may be in conflict, overlapping, or duplication: Section 1(3)(b) of House Bill 209, providing for nomination of eligible high school students by the principals of accredited high schools, will be implemented beginning with the 1987-88 academic year (which will constitute the first application period following the July 15, 1986 effective date of House Bill 209). It was not feasible to develop an expedient procedure to implement this particular subsection prior to the commencement of the 1986-87 academic year.
(a) Necessity of proposed regulation if in conflict:
(b) If in conflict, was effort made to harmonize the proposed administrative regulation with conflicting provisions:
(6) Any additional information or comments: None

Tiering:
Was tiering applied? No. No burden is imposed by this regulation. It merely establishes program participation standards applicable to all on an equal basis.

REVENUE CABINET
Department of Professional and Support Services

103 KAR 43:240. Supplemental highway user motor fuel tax.

RELATES TO: KRS 138.220, 138.270, 138.565, 234.320, 234.380
PURSUANT TO: KRS Chapter 13A
NECESSITY AND FUNCTION: This regulation clarifies the rate at which the "supplemental highway user motor fuel tax" is to be levied.

Section 1. (1) General. Under the provisions of KRS 138.220(1), the tax on motor fuels is calculated at the rate of nine (9) percent of the average wholesale price of gasoline. The tax is paid and remitted to the cabinet on a monthly basis. The same requirements are to be followed in reporting and remitting an additional levy termed the "supplemental highway user motor fuel tax" which is effective July 1, 1986.
(2) Rate. The "supplemental highway user motor fuel tax" rate is determined by incremental adjustments based on a decline in the average wholesale price of gasoline. The adjustment is made by calculating the difference in the average wholesale price of gasoline determined by the Revenue Cabinet for the October-December, 1985 quarter and the average wholesale price determined applicable by the Cabinet for the July-Septemer, 1986 quarter and each quarter thereafter. For each quarter in which a decrease in the average wholesale price occurs, the supplemental highway user motor fuel tax is increased by an amount equal to one-half (1/2) of the decrease. The incremental adjustments will be made for each quarter in which a decrease in the average wholesale price of gasoline occurs until the supplemental highway user motor fuel tax reaches a total rate of five (5) cents per gallon. The total of all quarterly adjustments may not increase the supplemental highway user motor fuel tax rate beyond a maximum of five (5) cents per gallon.

GARY W. GILLIS, Secretary
APPROVED BY AGENCY: June 12, 1986
FILED WITH LRC: June 12, 1986 at 3 p.m.
PUBLIC HEARING SCHEDULED: A public hearing on this regulation will be held on July 23, 1986 at 10 a.m. in Room 406 of the Capitol Annex, Frankfort, Kentucky. If no written notice of intent to attend the public hearing is received within five days before the scheduled hearing, the hearing will be cancelled. Those interested in attending shall notify in writing: Scott Akers, Revenue Cabinet, Division of Tax Policy and Legal Services, New Capitol Annex Building, Frankfort, Kentucky 40620.

REGULATORY IMPACT ANALYSIS

Agency Contact Person: Scott Akers
(1) Type and number of entities affected: The 1986 General Assembly enacted legislation to increase the motor fuels taxes (gasoline, special fuels, and liquified petroleum gas). This legislation enacted the "Supplemental Highway User Motor Fuel Tax" which provides that the rate of the tax must be computed quarterly and the increase in the rate must be in proportion to a decline in the average wholesale price of gasoline when compared to a specified

base period. The purpose of this regulation is to make clear that the total rate increase cannot exceed five cents per gallon. Those persons affected by this regulation are consumers purchasing fuel in Kentucky for consumption on the highways.

(a) Direct and indirect costs or savings to those affected:

1. First year: The taxes paid by the motor fuels dealer, but it is passed on to the consumer. Therefore, the tax becomes the burden of the consumer purchasing fuel in Kentucky for consumption on the highways.

2. Continuing costs or savings: Same as first year.

3. Additional factors increasing or decreasing costs (note any effects upon competition): None

(b) Reporting and paperwork requirements: The rate increase should have no measurable effect on reporting and paperwork requirements.

(2) Effects on the promulgating administrative body:

(a) Direct and indirect costs or savings:

1. First year: Nominal costs.

2. Continuing costs or savings: None

3. Additional factors increasing or decreasing costs: None

(b) Reporting and paperwork requirements: No more than currently required.

(3) Assessment of anticipated effect on state and local revenues: Significant increase in road fund receipts can be anticipated. There will be a small increase in local revenues for road construction and maintenance.

(4) Assessment of alternative methods; reasons why alternatives were rejected: None. To supplement the rate increase on motor fuels, the General Assemby enacted a user tax on heavy trucks which will also enhance the road fund.

(5) Identify any statute, administrative regulation or government policy which may be in conflict, overlapping, or duplication: None

(a) Necessity of proposed regulation if in conflict: N/A

(b) If in conflict, was effort made to harmonize the proposed administrative regulation with conflicting provisions: N/A

(6) Any additional information or comments:

Tiering:
Was tiering applied? No. Tiering is not applicable since this regulation applies equally to all motor fuel consumers.

TOURISM CABINET
Department of Fish and Wildlife Resources

301 KAR 3:080. Prohibition of lead shot for waterfowl and dove hunting.

RELATES TO: KRS 150.010, 150.015, 150.025, 150.360, 150.600

PURSUANT TO: KRS 13A.350, 150.025

NECESSITY AND FUNCTION: When eaten by waterfowl and other migratory birds, spent lead shotgun pellets may have a toxic effect. This regulation is necessary to protect waterfowl, and the birds of prey which feed upon waterfowl, from lead poisoning due to the ingestion of lead shot. The function of this regulation is to specify those areas in which lead shot is prohibited for the taking of waterfowl and doves.

Section 1. Prohibition of Lead Shot for Waterfowl Hunting. Lead shot is prohibited for the taking of ducks, geese, coots and mergansers in the Western Zone. This zone consists of the area west of a boundary beginning at the Kentucky-Tennessee border at Fulton, Kentucky, extending north along the Purchase Parkway to I-24, east on I-24 to U.S. 641, north on U.S. 641 to U.S. 60, northeast on U.S. 60 to U.S. 41 and then north on U.S. 41 to the Kentucky-Indiana border.

Section 2. Prohibition of Lead Shot for Dove Hunting. Lead shot is prohibited for the taking of doves on the Ballard, Swan Lake, Peal, Sloughs, and Kaler Bottoms Wildlife Management Areas.

Section 3. Possession of Lead Shot Shells. Persons hunting waterfowl in the Western Zone or hunting doves on the wildlife management areas listed in Section 2 of this regulation shall not possess lead shot shells.

G. WENDELL COMBS, Secretary
DON R. McCORMICK, Commissioner
CHARLES E. PALMER, JR., Chairman

APPROVED BY AGENCY: August 23, 1985

FILED WITH LRC: June 3, 1986 at 3 p.m.

PUBLIC HEARING SCHEDULED: A public hearing will be held on July 23, 1986 at 3 p.m. in the Commission Room of the Department of Fish and Wildlife Resources central offices at Frankfort, Kentucky. Those interested in attending this hearing shall contact: William D. Graves, Director, Wildlife Division, Department of Fish and Wildlife Resources, Arnold L. Mitchell Building, #1 Game Farm Road, Frankfort, Kentucky 40601.

REGULATORY IMPACT ANALYSIS

Agency Contact Person: Don R. McCormick

(1) Type and number of entities affected: Approximately 10,000 persons will participate in the waterfowl and dove hunting affected by this regulation.

(a) Direct and indirect costs or savings to those affected: Direct costs involve the purchase of shot shells containing steel rather than lead shot. The cost of such shells is comparable to that for lead shot shells currently in use. A small, but unknown, number of persons may find it necessary to purchase larger gauge shotguns as steel shot shells may not be available in small gauges. Some persons may purchase new choke devices to accommodate steel shot ballistics which differ somewhat from those for lead shot.

1. First year: Persons who purchase new shotguns or accessories will incur levels of costs at their discretion the first year.

2. Continuing costs or savings: Costs will decline after the first year for those persons who elected to purchase new shotguns or accessories. Steel shot shell costs might also be expected to decline as their use becomes more widespread.

3. Additional factors increasing or decreasing costs (note any effects upon competition): None

(b) Reporting and paperwork requirements: None

(2) Effects on the promulgating administrative body: Requires time and effort in developing, publishing, and enforcing the proposed

regulation.

(a) Direct and indirect costs or savings: Primary costs are associated with enforcing the regulation. Savings would accrue to the Department in that it would be relieved of the necessity of compliance with federal lead poisoning monitoring requirements in the Western Zone.

1. First year: The estimated cost associated with establishing this regulation is $2,000. The regulation is not anticipated to add significantly to the current cost of enforcing migratory bird hunting regulations.

2. Continuing costs or savings: Resultant waiver of federally required lead poisoning monitoring will continue to result in savings to the department.

3. Additional factors increasing or decreasing costs: This action will preclude the potential costs of responding to a major migratory bird lead poisoning incident.

(b) Reporting and paperwork requirements: None

(3) Assessment of anticipated effect on state and local revenues: No significant short term effect on state or local revenues is anticipated. Public announcements of the proposed action were made in the fall of 1985 to provide retailers adequate advance notice. Prevention of a serious migratory bird lead poisoning incident will enhance long term waterfowl hunting opportunity and favorably affect state and local revenues through an increase in hunter participation and related expenditures by hunters.

(4) Assessment of alternative methods; reasons why alternatives were rejected: The department could select the no action alternative of ignoring the potential for lead poisoning in migratory birds. This alternative is contrary and irresponsible with respect to our mandate to assure a continued supply of wildlife. Recent litigation by conservation ogranizations to prevent lead poisoning of bald eagles due to their feeding on waterfowl killed or wounded with lead shot could result in the closure of waterfowl hunting seasons by the U.S. Fish and Wildlife Service in areas still using toxic lead shot. The prohibition of lead shot use is the alternative which will most benefit the migratory bird resource, waterfowl hunters, and other conservationists.

(5) Identify any statute, administrative regulation or government policy which may be in conflict, overlapping, or duplication: None known.

(a) Necessity of proposed regulation if in conflict:

(b) If in conflict, was effort made to harmonize the proposed administrative regulation with conflicting provisions:

(6) Any additional information or comments: None

Tiering:
Was tiering applied? No. This type of regulation does not appear to be adaptable to the tiering process.

CORRECTIONS CABINET

501 KAR 6:110. Roederer Farm Center.

RELATES TO: KRS Chapters 196, 197, 439
PURSUANT TO: KRS 196.035, 197.020, 439.470, 439.590, 439.640
NECESSITY AND FUNCTION: KRS 196.035, 197.020, 439.470, 439.590, and 439.640 authorizes the secretary to adopt, amend or rescind regulations necessary and suitable for the proper administration of the cabinet or any division therein. These regulations are in conformity with those provisions.

Section 1. Pursuant to the authority vested in the Corrections Cabinet the following policies and procedures are incorporated by reference on June 13, 1986 and hereinafter should be referred to as Roederer Farm Center Policies and Procedures. Copies of the procedures may be obtained from the Office of the General Counsel, Corrections Cabinet, State Office Building, Frankfort, Kentucky 40601.

RFC 01-08-01	Public Information and News Media Access
RFC 01-10-01	RFC Cooperation with Outside Bodies Including Courts, Governmental Legislative, Executive, and Community Agencies
RFC 01-06-01	Inmate Access to and Communication with RFC Staff
RFC 01-07-01	Institutional Legal Assistance
RFC 01-09-01	Staff Participation in Professional Organization and Conferences; Provisions for Leave and Reimbursement for Expenses
RFC 01-12-01	Institutional Duty Officer - Responsibilities
RFC 02-01-01	Fiscal Management: Organization
RFC 02-01-02	Fiscal Management: Accounting Procedures
RFC 02-01-03	Fiscal Management: Agency Funds
RFC 02-02-01	Inmate Accounts
RFC 02-02-02	Inmate Control of Personal Funds
RFC 02-02-03	Storage and Disposition of Monies received on Weekends, Holidays, and Between 4:00 p.m. and 8:00 p.m. Weekdays
RFC 03-01-01	General Guidelines for RFC Employees
RFC 03-01-02	Service Regulations, Attendance Accumulation and Use of Leave
RFC 03-03-01	Employee Grievance Procedures
RFC 03-04-01	Personnel Records
RFC 03-05-01	Personnel Vacancies: Promotion Board
RFC 03-06-01	Work Planning: Employee Evaluations and Evaluation Control
RFC 03-07-01	Affirmative Action - E.E.O.
RFC 03-08-01	Confidentiality of Information, Roles and Services of Consultants, Contract Personnel, and Volunteers
RFC 03-09-01	Personnel Manning Review
RFC 03-10-01	Employee's Handbook
RFC 03-11-01	Replacement of Damaged or Destroyed Personal Property
RFC 03-12-01	Corrections Cabinet Staff Members Entering the Roederer Farm Center While Being Under the Influence
RFC 03-13-01	Staff/Visitor Meals
RFC 04-01-01	Employee Training and Development
RFC 05-01-01	Information System
RFC 06-01-01	Offender Records
RFC 06-02-01	Use of Inmate Records/Security of

Inmate Records
RFC 06-03-01 Records Release of Information
RFC 11-01-01 Food Services: General Guidelines
RFC 11-02-01 Food Service: Security
RFC 11-03-01 Dining Room Guidelines
RFC 11-04-01 Food Service: Meals
RFC 11-04-02 Food Service: Menu, Nutrition and Special Diets
RFC 11-05-01 Food Service: Kitchen and Dining Room Inmate Work Responsibilities
RFC 11-05-02 Medical Screening of Food Handlers
RFC 11-06-01 Food Service: Inspections and Sanitation
RFC 11-07-01 Food Service: Purchasing, Storage and Farm Products
RFC 14-01-01 Inmate Rights and Responsibilities
RFC 14-02-01 Legal Services Program
RFC 14-03-01 Inmate Grievance Procedure
RFC 14-04-01 Inmate Participation in Authorized Research
RFC 16-02-01 Telephone Communications
RFC 16-03-02 Christmas Packages
RFC 17-01-01 Assessment/Orientation Procedure
RFC 17-02-01 Inmate Reception Process
RFC 17-03-01 Inmate Personal Property and Property Control
RFC 17-04-01 Unauthorized Items
RFC 17-05-01 Inmate Canteen
RFC 21-01-01 Library Services
RFC 22-01-02 Recreational Equipment Check-in/Check-out Procedure
RFC 22-02-01 Outside Recreation
RFC 22-02-02 Entry/Exit Procedure for Inmate Outside Recreation
RFC 22-03-01 Inmate Clubs and Organizations
RFC 22-03-02 Privilege Trips
RFC 22-04-01 Conducting Inmate Organizational Meetings and Programs
RFC 22-05-01 Woodworking Shop
RFC 22-06-01 Playing Cards
RFC 23-01-01 Religious Services
RFC 23-02-01 Security Procedures for the Chapel
RFC 23-03-01 Visitors for Religious Programs
RFC 23-04-01 Marriage of Inmates
RFC 24-01-01 Social Services and Counseling Program

GEORGE W. WILSON, Secretary
APPROVED BY AGENCY: June 13, 1986
FILED WITH LRC: June 13, 1986 at noon
PUBLIC HEARING SCHEDULED: A public hearing on this regulation has been scheduled for July 23, 1986 at 9 a.m. at the auditorium in the State Office Building. Those interested in attending this hearing shall notify in writing: Barbara Jones, Office of General Counsel, 5th Floor, State Office Building, Frankfort, Kentucky 40601.

REGULATORY IMPACT ANALYSIS

Agency Contact Person: Barbara W. Jones
(1) Type and number of entities affected: 58 employees of the Roederer Farm Center, 252 inmates, and all visitors to state correctional institutions.
(a) Direct and indirect costs or savings to those affected:
1. First year: None
2. Continuing costs or savings: None
3. Additional factors increasing or decreasing costs (note any effects upon competition): None
(b) Reporting and paperwork requirements: None
(2) Effects on the promulgating administrative body:
(a) Direct and indirect costs or savings:
1. First year: None. All of the costs involved with the implementation of the regulation are included in the operational budget.
2. Continuing costs or savings: Same as (2)(a)1.
3. Additional factors increasing or decreasing costs: Same as (2)(a)1.
(b) Reporting and paperwork requirements: Monthly submission of policy revisions.
(3) Assessment of anticipated effect on state and local revenues: None
(4) Assessment of alternative methods; reasons why alternatives were rejected: None
(5) Identify any statute, administrative regulation or government policy which may be in conflict, overlapping, or duplication: None
(a) Necessity of proposed regulation if in conflict:
(b) If in conflict, was effort made to harmonize the proposed administrative regulation with conflicting provisions:
(6) Any additional information or comments: None

Tiering:
Was tiering applied? No. All policies are administered in a uniform manner.

TRANSPORTATION CABINET

600 KAR 1:080. Repeal of transportation related administrative regulations.

RELATES TO: KRS Chapter 13A
PURSUANT TO: KRS Chapter 13A, 174.050
NECESSITY AND FUNCTION: Effective July 15, 1986, House Bill 706, enacted by the 1986 Kentucky General Assembly, transfers responsibility for removal of abandoned vehicles from the Department of Highways to the Department of State Police. Therefore, Highways' related administrative regulation must be repealed.

Section 1. 603 KAR 3:040, Abandoned vehicles; removal, is hereby repealed.

C. LESLIE DAWSON, Secretary/Commissioner
APPROVED BY AGENCY: June 6, 1986
FILED WITH LRC: June 10, 1986 at 9 a.m.
PUBLIC HEARING SCHEDULED: A public comment hearing will be held on this proposed administrative regulation on July 24, 1986 at 8:30 a.m. in the 4th floor hearing room of the State Office Building. This building is located on the corner of High and Clinton Streets in Frankfort, Kentucky. Any person who intends to attend this hearing must by July 19, 1986 in writing so notify: Sandra G. Pullen, Executive's Staff Advisor, Transportation Cabinet, Tenth Floor, State Office Building, Frankfort, Kentucky 40622.

REGULATORY IMPACT ANALYSIS

Agency Contact Person: Sandra G. Pullen
(1) Type and number of entities affected: All owners of vehicles abandoned on Kentucky highways.
(a) Direct and indirect costs or savings to those affected: None - the program is transferred from the Transportation Cabinet to

State Police.
1. First year: N/A
2. Continuing costs or savings: N/A
3. Additional factors increasing or decreasing costs (note any effects upon competition): N/A
(b) Reporting and paperwork requirements: None
(2) Effects on the promulgating administrative body: Removes responsibility of abandoned vehicles.
(a) Direct and indirect costs or savings: Minimal
1. First year: Minimal
2. Continuing costs or savings: Minimal
3. Additional factors increasing or decreasing costs: None
(b) Reporting and paperwork requirements: None
(3) Assessment of anticipated effect on state and local revenues: None
(4) Assessment of alternative methods; reasons why alternatives were rejected: None - statutory change which removed responsibility.
(5) Identify any statute, administrative regulation or government policy which may be in conflict, overlapping, or duplication: None
(a) Necessity of proposed regulation if in conflict:
(b) If in conflict, was effort made to harmonize the proposed administrative regulation with conflicting provisions:
(6) Any additional information or comments:

Tiering:
Was tiering applied? No. Not applicable.

TRANSPORTATION CABINET

600 KAR 3:010. Relocation assistance payments of the Transportation Cabinet.

RELATES TO: KRS 56.610 to 56.760, 174.080, 183.024, Section 1 of Senate Bill 16 of 1986 General Assembly
PURSUANT TO: KRS 56.610 to 56.760
NECESSITY AND FUNCTION: Pursuant to KRS 56.610 to 56.760, as amended by the 1986 General Assembly, the Transportation Cabinet is required to adopt administrative regulations and procedures to implement the provisions of KRS 56.610 to 56.760 with regard to providing for uniform relocation assistance services and compensation to persons displaced by the land acquisition programs of the Transportation Cabinet.

Section 1. The cabinet does hereby adopt and incorporate by reference the federal regulations relating to uniform relocation assistance that are set forth in 49 CFR Part 25 which became effective April 28, 1986. The cabinet does also adopt and incorporate by reference Appendix A of 49 CFR Part 25 as it relates to uniform relocation assistance. Payments shall be made and services shall be provided to persons displaced by land acquisition programs on all projects of the Transportation Cabinet in the instances and upon the conditions set forth in the incorporated federal regulations.

Section 2. The payments and services set forth above which involve a Transportation Cabinet project shall be made regardless of whether federal funds do or do not participate in the project.

Section 3. All documents incorporated by reference herein are on file for public inspection in the offices of the Transportation Cabinet, Division of Right of Way, State Office Building, Frankfort, Kentucky 40622.

Section 4. This administrative regulation shall not be effective until July 15, 1986, or later.

Section 5. 603 KAR 4:015, Relocation assistance, is hereby repealed.

C. LESLIE DAWSON, Secretary/Commissioner
APPROVED BY AGENCY: June 12, 1986
FILED WITH LRC: June 13, 1986 at 10 a.m.
PUBLIC HEARING SCHEDULED: A public comment hearing will be held on this proposed administrative regulation on July 24, 1986 at 9:00 a.m. in the 4th floor hearing room of the State Office Building. This building is located on the corner of High and Clinton Streets in Frankfort, Kentucky. Any person who intends to attend this hearing must by July 19, 1986 in writing so notify: Sandra G. Pullen, Executive's Staff Advisor, Transportation Cabinet, Tenth Floor, State Office Building, Frankfort, Kentucky 40622.

REGULATORY IMPACT ANALYSIS

Agency Contact Person: Sandra G. Pullen
(1) Type and number of entities affected: All persons displaced by Transportation Cabinet land acquisition projects.
(a) Direct and indirect costs or savings to those affected: None
1. First year: N/A
2. Continuing costs or savings: N/A
3. Additional factors increasing or decreasing costs (note any effects upon competition): N/A
(b) Reporting and paperwork requirements: Each must submit an application for relocation assistance. However, Transportation Cabinet employees will assist in completion of application form.
(2) Effects on the promulgating administrative body: None. No change in cabinet policy.
(a) Direct and indirect costs or savings: None, we have been required by the federal government to provide relocation assistance since the 1960's.
1. First year: N/A
2. Continuing costs or savings: N/A
3. Additional factors increasing or decreasing costs: N/A
(b) Reporting and paperwork requirements: None
(3) Assessment of anticipated effect on state and local revenues: None
(4) Assessment of alternative methods; reasons why alternatives were rejected: The regulation is required on all federal-aid projects. However, it could have been promulgated without application to non-federal aid projects. That option was rejected because all citizens of Kentucky should receive the same benefits when displaced by a state project.
(5) Identify any statute, administrative regulation or government policy which may be in conflict, overlapping, or duplication: None
(a) Necessity of proposed regulation if in conflict: N/A
(b) If in conflict, was effort made to harmonize the proposed administrative regulation

with conflicting provisions: N/A

(6) Any additional information or comments: Required by the U.S. Department of Transportation.

Tiering:
Was tiering applied? Yes. There are separate benefits for businesses, farms, residential property and non-profit organizations.

PUBLIC PROTECTION AND REGULATION CABINET
Department of Insurance

806 KAR 18:030. Group health insurance coordination of benefits.

RELATES TO: 1986 Ky. Acts c. 433 §1, §2, §3, and §4

PURSUANT TO: KRS Chapter 13A, 304.2-110, 304.32-250, 304.38-150

NECESSITY AND FUNCTION: 1986 Kentucky Acts c. 433 §1, §2, §3, and §4 authorize the Commissioner of Insurance to prescribe guidelines for coordination of benefits between group health insurance contracts. KRS 304.2-110 provides that the Commission of Insurance may make reasonable regulations necessary for or as an aid to the effectuation of any provision of the Kentucky Insurance Code. KRS 304.32-250 provides that the Commissioner of Insurance may promulgate reasonable regulations he deems necessary for the proper administration of KRS Chapter 304.32. KRS 304.38-150 provides that the Commissioner of Insurance may promulgate reasonable regulations which he deems necessary for the proper administration of KRS Chapter 304.38. This regulation establishes guidelines for coordination of benefits by group health insurance contracts.

Section 1. Purpose and Scope. (1) Purpose. The purpose of this regulation is to adopt a regulation substantially identical to the Model Group Coordination of Benefits Regulation of the National Association of Insurance Commissioners. This regulation is intended to establish uniformity in the permissive use of over-insurance provisions and to avoid claim delays and misunderstandings that could otherwise result from the use of inconsistent or incompatible provisions among plans.

(2) Coordination of benefits. A coordination of benefits ("COB") provision is one that is intended to avoid claims payment delays and duplication of benefits when a person is covered by two (2) or more plans providing benefits for services for medical, dental, or other care or treatment. It avoids claims payment delays by establishing an order in which plans pay their claims and providing the authority for the orderly transfer of information needed to pay claims promptly. It avoids duplication of benefits by permitting a reduction of the benefits of a plan when, by the rules established by this regulation, it does not have to pay its benefits first.

(3) Coordination permissive. This regulation permits, but does not require, plans to include COB provisions.

(4) Consistency with this regulation. If a group contract includes a COB provision, it must be consistent with this regulation. A plan that does not include such a provision may not take the benefits of another plan (as defined in Section 2 of this regulation) into account when it determines its benefits. An exception to this provision is that a contract holder's coverage that is designed to supplement a part of a basic package of benefits may provide that the supplementary coverage shall be excess to any other parts of the plan provided by the contract holder.

Section 2. Definitions. As used in this regulation:

(1) Plan.

(a) A "plan" is a form of coverage with which coordination is allowed. The definition of plan in the group contract must state the types of coverage which will be considered in applying the COB provision of that contract. The right to include a type of coverage is limited by this subsection.

(b) The definition shown in the model COB provision in Section 3 of this regulation is an example of what may be used. Any definition that satisfies this subsection may be used.

(c) This regulation uses the term "plan." However, a group contract may, instead, use the term "program" or other reasonable term.

(d) Except as provided in paragraphs (e) and (f) of this subsection, "plan" shall not include individual or family insurance contracts.

(e) "Plan" may include:

1. Group insurance contracts;

2. Uninsured arrangements of group or group-type coverage; or

3. Group-type contracts. Group-type contracts are contracts which are not available to the general public and can be obtained and maintained only because of membership in or connection with a particular organization or group. Group-type contracts answering this description may be included in the definition of plan, at the option of the insurer or the service provider and its contract-client, whether or not uninsured arrangements or individual contract forms are used and regardless of how the group-type coverage is designated (for example, "blanket"). The use of payroll deductions by the employee, subscriber, or member to pay for the coverage is not sufficient, of itself, to make an individual contract part of a group-type plan. This description of group-type contracts is not intended to include individually underwritten and issued, guaranteed renewable policies that may be purchased through payroll deduction at a premium savings to the insured. Franchise plan health insurance issued pursuant to KRS 304.17-390 is not a "group-type contract."

(f) "Plan" shall not include the medical benefits coverage in a group, group-type, and individual motor vehicle "no-fault" and traditional automobile "fault" type contracts.

(g) "Plan" may include Medicare or other governmental benefits. That part of the definition of "plan" may be limited to the hospital, medical, and surgical benefits of the government program. However, "plan" shall not include Medicaid and shall not include a plan when, by law, its benefits are excess to those of any private insurance plan or other non-governmental plan.

(h) "Plan" shall not be construed to include group or group-type hospital indemnity benefits of $100 per day or less, but may be construed to

include the amount by which group or group-type hospital indemnity benefits exceed $100 per day. "Hospital indemnity benefits" are those not related to expenses incurred. The term does not include reimbursement-type benefits even if they are designed or administered to give the insured the right to elect indemnity-type benefits at the time of claim.

(i) "Plan" shall not include school accident-type coverages. These cover elementary, high school, and college students for accidents only, including athletic injuries, either on a 24-hour basis or on a "to and from school" basis.

(2) "Insurer" means an insurer, a non-profit hospital, medical-surgical, dental, and health service corporation, a health maintenance organization, or a prepaid dental plan organization.

(3) "This plan," in a COB provision, means the part of the group contract providing the health care benefits to which the COB provision applies and which may be reduced on account of the benefits of other plans. Any other part of the group contract providing health care benefits is separate from "this plan." A group contract may apply one (1) COB provision to certain of its benefits (such as dental benefits), coordinating only with like benefits, and may apply other separate COB provisions to coordinate other benefits.

(4) "Primary plan" means a plan whose benefits for a person's health care coverage must be determined without taking the existence of any other plan into consideration. A plan is a primary plan if either paragraphs (a) or (b) of this section is true. There may be more than one (1) primary plan (for example, two (2) plans which have no order of benefit determination rules).

(a) The plan either has no order of benefit determination rules, or it has rules which differ from those permitted by this regulation.

(b) All plans which cover the person use the order of benefit determination rules required by this regulation and under those rules the plan determines its benefits first.

(5) "Secondary plan" means a plan which is not a primary plan. If a person is covered by more than one (1) secondary plan, the order of benefit determination rules of this regulation decide the order in which their benefits are determined in relation to each other. The benefits of each secondary plan may take into consideration the benefits of the primary plan or plans and the benefits of any other plan which, under the rules of this regulation, has its benefits determined before those of that secondary plan.

(6) "Allowable expense."

(a) "Allowable expense" is the necessary, reasonable, and customary item of expense for health care, when the item of expense is covered at least in part under any of the plans involved, except where a statute requires a different definition. However, items of expense under coverages such as dental care, vision care, prescription drugs, or hearing aid programs may be excluded from the definition of allowable expense. A plan which provides benefits only for any such items of expense may limit its definition of allowable expense to like items of expense.

(b) When a plan provides benefits in the form of services, the reasonable cash value of each service will be considered as both an allowable expense and a benefit paid.

(c) The difference between the cost of a private hospital room and the cost of a semi-private hospital room is not considered an allowable expense under the above definition unless the patient's stay in a private hospital room is medically necessary according to generally accepted medical practice.

(d) When COB is restricted in its use to specific coverage in a contract (for example, major medical or dental), the definition of "allowable expense" must include the corresponding expenses for services to which COB applies.

(7) "Claim" means a request that benefits of a plan be provided or paid. The benefits claimed may be in the form of services (including supplies), payment for all or a portion of the expenses incurred, any combination of the foregoing, or an indemnification.

(8) "Claim determination period."

(a) Means the period of time, which must not be less than twelve (12) consecutive months, over which allowable expenses are compared with total benefits payable in the absence of COB, to determine whether over-insurance exists and how much each plan will pay or provide. It usually is a calendar year, but a plan may use some other period of time that fits the coverage of the group contract. A person may be covered by a plan during a portion of a claim determination period if that person's coverage starts or ends during the claim determination period.

(b) As each claim is submitted, each plan is to determine its liability and pay or provide benefits based upon allowable expenses incurred to that point in the claim determination period, but that determination is subject to adjustment as later allowable expenses are incurred in the same claim determination period.

Section 3. Model COB Contract Provision.

(1) General. Section 3 contains a model COB provision for use in group contracts. That use is subject to the provisions of subsections (2) and (3) of this section and to the provisions of Section 4 of this regulation, rules for coordination of benefits.

(2) Flexibility. A group contract's COB provision does not have to use the words and format shown in this regulation. Changes may be made to fit the language and style of the rest of the group contract or to reflect to the difference among plans which provide services, which pay benefits for expenses incurred, and which indemnify. Substantive changes are allowed only as set forth in this regulation.

(3) Prohibited coordination and benefit design. A group contract may not reduce benefits on the basis that:

(a) Another plan exists;

(b) Except with respect to part B of Medicare, that a person is or could have been covered under another plan;

(c) A person has elected an option under another plan providing a lower level of benefits than another option which could have been elected; or

(d) Its benefits are "excess" or "always secondary" to any plan defined in Section 2(1), except in accordance with this regulation.

(4) Text of model COB provision. Coordination of the group contract's benefits with other

benefits.

(a) Applicability.

1. This coordination of benefits ("COB") provision applies to this plan when an employee or the employee's covered dependent has health care coverage under more than one (1) plan. "Plan" and "this plan" are defined below.

2. If this COB provision applies, the order of benefit determination rules should be looked at first. Those rules determine whether the benefits of this plan are determined before or after those of another plan. The benefits of this plan:

a. Shall not be reduced when, under the order of benefit determination rules, this plan determines its benefits before another plan; but

b. May be reduced when, under the order of benefit determination rules, another plan determines its benefits first. This reduction is described in paragraph (d) of this subsection, effects on the benefits of this plan.

(b) Definitions.

1. "Plan" is any of these which provides benefits or services for, or because of, medical or dental care or treatment:

a. Group insurance for group-type coverage, whether insured or uninsured. This includes prepayment, group practice, or individual practice coverage. It also includes coverage other than school accident-type coverage.

b. Coverage under a governmental plan or required or provided by law. This does not include a state plan under Medicaid (Title XIX, grants to states for medical assistance programs, of the United States Social Security Act as amended from time to time). It also does not include any plan when, by law, its benefits are excess to those of any private insurance program or other non-governmental program.

c. Each contract or other arrangement for coverage under clause a or b of this subparagraph is a separate plan. Also, if an arrangement has two (2) parts and COB rules apply only to one (1) of the two (2), each of the parts is a separate plan.

2. "This plan" is the part of the group contract that provides benefits for health care expenses.

3. "Primary plan/secondary plan." The order of benefit determination rules state whether this plan is a primary plan or a secondary plan as to another plan covering the person.

a. When this plan is a primary plan, its benefits are determined before those of the other plan and without considering the other plan's benefits.

b. When this plan is a secondary plan, its benefits are determined after those of the other plan and may be reduced because of the other plan's benefits.

c. When there are more than two (2) plans covering the person, this plan may be a primary plan as to one (1) or more of the plans and may be a secondary plan as to a different plan or plans.

4. "Allowable expense" means a necessary, reasonable, and customary item of expense for health care, when the item of expense is covered at least in part by one (1) or more plans covering the person for whom the claim is made.

a. The difference between the cost of a private hospital room and the cost of a semi-private hospital room is not considered an allowable expense under the above definition unless that patient's stay in a private hospital room is medically necessary either according to generally accepted medical practice, or as specifically defined in the plan.

b. When a plan provides benefits in the form of services, the reasonable cash value of each service rendered will be considered both an allowable expense and a benefit paid.

5. "Claim determination period" means a calendar year. However, it does not include any part of a year during which a person has no coverage under this plan, or any part of a year before the date this COB provision or a similar provision takes effect.

(c) Order of benefit determination rules.

1. General. When there is a basis for a claim under this plan and another plan, this plan is a secondary plan which has benefits determined after those of the other plan, unless:

a. The other plan has rules coordinating benefits with those of this plan; and

b. Both those rules and this plan's rules, in subparagraph 2 of this paragraph, require that this plan's benefits be determined before those of the other plan.

2. Rules. This plan determines its order of benefits using the first of the following rules which applies:

a. Non-dependent/dependent. The benefits of this plan which covers the person as an employee, member, or subscriber (that is, other than as a dependent) are determined before those of the plan which covers the person as a dependent.

b. Dependent child/parents not separate or divorced. Except as stated in clause c of this subparagraph, when this plan and another plan cover the same child as a dependent of different parents, called "parents":

(i) The benefits of the plan of the parent whose birthday falls earlier in a year are determined before those of the plan of the parent whose birthday falls later in that year; but

(ii) If both parents have the same birthday, the benefits of the plan which covered the parent longer are determined before those of the plan which covered the other parent for a shorter period of time.

(iii) However, if the other plan does not have the rule described in subclause (i) of this clause, but instead has a rule based upon the gender of the parent, and if, as a result, the plans do not agree on the order of benefits, the rule in the other plan will determine the order of benefits.

c. Dependent child/separated or divorced parents. If two (2) or more plans cover a person as a dependent child of divorced or separated parents, benefits for the child are determined in this order:

(i) First, the plan of the parent with custody of the child;

(ii) Then, the plan of the spouse of the parent with the custody of the child; and

(iii) Finally, the plan of the parent not having custody of the child.

(iv) However, if the specific terms of a court decree state that one (1) of the parents is responsible for the health care expenses of the child, and the entity obligated to pay or provide the benefits of the plan of that parent has actual knowledge of those terms, the benefits of that plan are determined first. This

subclause does not apply to any claim determination period or plan year during which any benefits are actually paid or provided before the entity has actual knowledge.

d. Active/inactive employee. The benefits of a plan which covers a person as an employee who is neither laid off nor retired (or as that employee's dependent) are determined before those of a plan which covers that person as a laid off or retired employee (or as that employee's dependent). If the other plan does not have this rule, and if, as a result, the plans do not agree on the order of benefits, this provision is ignored.

e. Longer/shorter length of coverage. If none of the above rules determines the order of benefits, the benefits of the plan which covered an employee, member, or subscriber longer are determined before those of a plan which covered that person for the shorter time.

(d) Effect on the benefits of this plan.

1. When this paragraph applies. This paragraph (d) applies when, in accordance with paragraph (c) of this subsection, order of benefit determination rules, this plan is a secondary plan as to one or more other plans. In that event, the benefits of this plan may be reduced under this paragraph. Such other plan or plans are referred to as "the other plans" in subparagraph 2 of this paragraph.

2. Reduction in this plan's benefits. The benefits of this plan will be reduced when the sum of:

a. The benefits that would be payable for allowable expenses under this plan in the absence of this COB provision; and

b. The benefits that would be payable for the allowable expenses under the other plans, in the absence of provisions with a purpose like that of this COB provision, whether or not claim is made, exceeds those allowable expenses in a claim determination period. In that case, the benefits of this plan will be reduced so that they and the benefits payable under the other plans do not total more than those allowable expenses. When the benefits of this plan are reduced as described above, each benefit is reduced in proportion. It is then charged against any applicable benefit limit of this plan.

(e) Right to receive and release needed information. Certain facts are needed to apply the COB rules. (Insurer name) has the right to decide which facts it needs. It may get needed facts from or give them to any other organization or person. (Insurer name) need not tell, or get the consent of, any person to do this. Each person claiming benefits under this plan must give (insurer name) any facts it needs to pay the claim.

(f) Facility of payment. A payment made under another plan may include an amount which should have been paid under this plan. If it does, (insurer name) may pay that amount to the organization which made that payment. That amount will then be treated as though it were a benefit paid under this plan. (Insurer name) will not have to pay that amount again. The term "payment made" includes providing benefits in the form of services, in which case "payment made" means reasonable cash value of the benefits provided in the form of services.

(g) Right of recovery. If the amount of the payments made by (insurer name) is more than it should have been under this COB provision, it may recover the excess from one or more of the persons it has paid or for whom it has paid, insurers, or other organizations. The "amount of payments made" includes the reasonable cash value of any benefits provided in the form of services.

Section 4. Rules for Coordination of Benefits.

(1) Order of benefits.

(a) General.

1. The primary plan must pay or provide its benefits as if the secondary plan or plans did not exist.

2. A secondary plan may take the benefits of another plan into account only when, under this regulation, it is secondary to that other plan.

(b) Dependent child/parents not separated or divorced. The word "birthday" in the wording shown in subsection (4)(c) to (b) of this section refers only to month and day in a calendar year, not the year in which the person was born.

(c) Longer/shorter length of coverage.

1. To determine the length of time a person has been covered under a plan, two (2) plans shall be treated as one (1) if the claimant was eligible under the second within twenty-four (24) hours after the first ended. Thus, the start of a new plan does not include a change in the amount of scope of a plan's benefits, a change in the entity which pays, provides, or administers the plan's benefits, or a change from one type of plan to another (such as, from a single employer plan to that of a multiple employer plan).

2. The claimant's length of time covered under a plan is measured from the claimant's first date of coverage under that plan. If that date is not readily available, the date the claimant first became a member of the group shall be used as the date from which to determine the length of time the claimant's coverage under the present plan has been in force.

(2) Reduction in a plan's benefits when it is secondary.

(a) General. A secondary plan may reduce its benefits by using alternatives 1, 2, or 3 below, or any version thereof which is more favorable to a covered person. This is subject to the conditions and limits described in this subsection.

(b) Alternative 1. Total allowable expenses.

1. When this alternative is used, a secondary plan may reduce its benefits so that the total benefits paid or provided by all plans during a claim determination period are not more than total allowable expenses. The amount by which the secondary plan's benefits have been reduced shall be used by the secondary plan to pay allowable expenses, not otherwise paid, which were incurred during the claim determination period by the person for whom the claim is made. As each claim is submitted, the secondary plan determines its obligation to pay for allowable expenses based on all claims which have been submitted up to that point in time during the claim determination period.

2. When this alternative is used, the suggested contract provision is as shown in Section 3(4)(d)2 of this regulation.

3. The last paragraph quoted in Section 3(4)(d)2 of this regulation may be omitted if the plan provides only one (1) benefit, or may

be altered to suit the coverage provided.

(c) Alternative 2. Total allowable expenses with co-insurance.

1. When this alternative is used, a secondary plan may reduce its benefits so that the total benefits paid or provided by all plans during a claim determination period are not more than a stated percentage, but not less than eighty (80) percent, of total allowable expenses. The amount by which the secondary plan's benefits have been reduced shall be used by the secondary plan to pay the stated percentage of allowable expenses, not otherwise paid, which were incurred during the claim determination period by the person for whom the claim is made. As each claim is submitted, the secondary plan determines its obligation to pay for the stated percentage of allowable expenses paid on all claims which were submitted up to that point in time during the claim determination period.

2. When this alternative is used, the suggested contract provision for use in Section 3(4)(d)2 of this regulation is shown below:

"2. Reduction in this plan's benefits. The benefits of this plan will be reduced when the sum of:

a. The benefits that would be payable for the allowable expenses under this plan in the absence of this COB provision; and

b. The benefits that would be payable for the allowable expenses under the other plans in the absence of provisions with a purpose like that of this COB provision, whether or not claim is made; exceeds the greater of 80% of those allowable expenses or the amount of benefits in a above. In that case, the benefits of this plan will be reduced so that they and the benefits in b above do not total more than that greater of 80% of those allowable expenses or the amount of benefits in a above. When the benefits of this plan are reduced as described above, each benefit is reduced in proportion. It is then charged against any applicable benefit limit of this plan."

3. The last paragraph of 2, quoted immediately above, may be omitted if the plan provides only one (1) benefit, or may be altered to suit the coverage provided.

(d) Alternative 3. Maintenance of benefits.

1. When this alternative is used, a secondary plan may reduce its benefits by the amount of the benefits payable under the other pans for the same expenses.

2. When this alternative is used, the suggested contract provision for use in Section 3(4)(d)2 of this regulation is shown below:

"2. Reduction in this plan's benefits. The benefits that would be payable under this plan in the absence of this COB provision will be reduced by the benefits payable under the other plans for the expenses covered in whole or in part under this plan. This applies whether or not claim is made a plan. When a plan provides benefits in the form of services, the reasonable cash value of each service rendered will be considered both an expense incurred and a benefit payable. When the benefits of this plan are reduced as described above, each benefit is reduced in proportion. It is then charged against any applicable benefit limit of this plan."

3. The last paragraph of 2, quoted immediately above, may be omitted if the plan provides only one (1) benefit, or may be altered to suit the coverage provided.

4. This alternative 3 may be used in a plan only when, in the absence of COB, the benefits of the plan (excluding benefits for dental care, (except prepaid dental plan organizations) vision care, prescription drugs or hearing aid programs) will, after any deductible, be:

a. Not less than fifty (50) percent of covered expenses:

(i) For the treatment of mental or nervous disorders or alcoholism or drug abuse; or

(ii) Under cost containment provisions with alternative benefits, such as those applicable to second surgical opinions, precertification of hospital stays, etc.; and

b. Not less than seventy-five (75) percent of other covered expenses.

5. A plan using this alternative 3 may exclude definitions of and references to allowable expenses, claim determination period, or both.

(e) Conditions for use of alternatives 2 and 3.

1. General. Alternatives 2 and 3 permit a secondary plan to reduce its benefits so that total benefits may be less than 100 percent of allowable expenses.

2. Conditions. A plan using alternatives 2 or 3 must comply with the following conditions:

a. Notice. The plan must provide prior notice to employees or members that when it is secondary (that is, it determines benefits after another plan):

(i) Its benefits plus those of the primary plan will be less than 100 percent of allowable expenses; unless:

(ii) The primary plan, by itself, provides benefits at 100 percent of allowable expenses.

b. Co-payment and deductible limit. When the plan is secondary, it must provide a limit on the amount the employee, member, or subscriber is required to pay toward the expenses or services covered under the plan and for which the plan is secondary. Such limit shall not exceed $2,000 for any covered person, or $3,000 for any family, in any claim determination period.

c. Unrestricted enrollment. The plan must permit a person to be enrolled for its health care coverage when that person's eligibility for health care coverage under another plan ends for any reason, if:

(i) Such a person is eligible for coverage under the plan; and

(ii) Such enrollment is made before the end of the thirty-one (31) day period immediately following either:

i. The date when health care coverage under the other plan ends; or

ii. The end of any continuation period elected by or for that person. This unrestricted enrollment is not required if a person remains eligible for coverage under that other plan, or a plan which replaces it, without interruption of that person's coverage.

d. Enrollment requirements. If a person is enrolled before the end of the period, described in clause c(ii) of this subparagraph, there shall be no interruption of coverage. Thus, the requirements concerning active work of employees, members, or subscribers, or non-confinements of dependents on the effective date of coverage, shall not be applied. However, coverage for the person under the plan may be subject to the same requirements, including underwriting requirements, benefit restrictions,

waiting periods, and pre-existing condition limitations that would have been applied had the person been enrolled under the plan on the later of:

(i) The date the person first became eligible for the plan's coverage; or

(ii) The date the employee, member or subscriber last became covered under the plan. Credit shall be given under any pre-existing condition limitation or waiting period from the later of the dates described in subclause (i) or (ii) of this clause to the date the person actually enrolled pursuant to clause c of this subparagraph.

(3) Reasonable cash value of services. A secondary plan which provides benefits in the form of services may recover the reasonable cash value of providing the services from the primary plan, to the extent that benefits for the services are covered by the primary plan and have not already been paid or provided by the primary plan. Nothing in this provision shall be interpreted to require a plan to reimburse a covered person in cash for the value of services provided by a plan which provides benefits in the form of services.

(4) Excess and other non-conforming provisions.

(a) Some plans have order of benefit determination rules not consistent with this regulation which declare that the plan's coverage is "excess" to all others, or "always secondary." This occurs because certain plans may not be subject to insurance regulation or some group contracts have not yet been conformed to this regulation pursuant to Section 6, effective date; existing contracts.

(b) A plan with order of benefit determination rules which comply with this regulation ("complying plan") may coordinate benefits with a plan which is "excess" or "always secondary" or which uses order of benefit determination rules which are inconsistent with those in this regulation ("non-complying plan") on the following basis:

1. If the complying plan is the primary plan, it shall pay or provide its benefits on a primary basis.

2. If the complying plan is the secondary plan, it shall, nevertheless, pay or provide its benefits first, but the amount of benefits payable shall be determined as if the complying plan were the secondary plan. In such a situation, such payment shall be the limit of the complying plan's liability.

3. If the non-complying plan does not provide the information needed by the complying plan to determine its benefits within a reasonable time after it is requested to do so, the complying plan shall assume that the benefits of the non-complying plan are identical to its own, and shall pay its benefits accordingly. However, the complying plan must adjust any payments it makes based on such assumption whenever information becomes available as to the actual benefits of the non-complying plan.

4. If:

a. The non-complying plan reduces its benefits so that the employee, subscriber, or member receives less in benefits than he or she would have received had the complying plan paid or provided its benefits as the secondary plan and the non-complying plan paid or provided its benefits as the primary plan; and

b. Governing state law allows the right of subrogation set forth below; then the complying plan shall advance to or on behalf of the employee, subscriber, or member an amount equal to such difference. However, in no event shall the complying plan advance more than the complying plan would have paid had it been the primary plan less any amount it previously paid. In consideration of such advance, the complying plan shall be subrogated to all rights of the employee, subscriber, or member against a non-complying plan. Such advance by the non-complying plan shall also be without prejudice to any claim it may have against the non-complying plan in the absence of such subrogation.

(5) Allowable expense. A term such as "usual and customary," "usual and prevailing," or "reasonable and customary" may be substituted for the term "necessary, reasonable, and customary." Such terms as "medical care" or "dental care" may be substituted for "health care" to describe the coverages to which the COB provisions apply.

(6) Subrogation. The COB concept clearly differs from that of subrogation. Provisions for one may be included in group health contracts without compelling the inclusion or exclusion of the other.

Section 5. Severability. If any provision of this regulation or the application thereof to any person or circumstance is for any reason held to be invalid, the remainder of this regulation and the application of such provision to other persons or circumstances shall not be affected thereby.

Section 6. Effective Date; Existing Contracts. (1) This regulation applies to group health contracts delivered, issued for delivery, or renewed on or after January 1, 1987.

(2) As a courtesy to the Legislative Research Commission, the Department of Insurance states that it intends this regulation to be permanent. This statement does not constitute an admission of the constitutionality of 1986 Ky. Act c. 499 (House Bill 310), §8 and 9.

ROBERT M. DAVIS, Secretary
GIL McCARTY, Commissioner

APPROVED BY AGENCY: June 6, 1986

FILED WITH LRC: June 13, 1986 at noon

PUBLIC HEARING SCHEDULED: Persons with an interest in the subject matter of the proposed regulation may submit written comments to Gil McCarty, Commissioner, Kentucky Department of Insurance, P.O. Box 517, Frankfort, Kentucky 40601. Such persons may appear at a public hearing scheduled for July 21, 1986, at 10:30 a.m. (ET) in the offices of the Kentucky Department of Insurance, 229 West Main Street, Frankfort, Kentucky 40601.

REGULATORY IMPACT ANALYSIS

Agency Contact Person: Patrick Watts, Counsel

Need for the Proposed Regulation: HB 607, adopted by the 1986 General Assembly, requires the Commissioner of Insurance to prescribe guidelines for coordination of benefits ("COB"). COB was developed to prevent a claimant from profiting from an illness as a result of duplicate group health insurance coverage. When implemented and effective, COB reduces group

health insurance costs because an insurer's obligation to pay benefits is reduced by reimbursement from another plan.

The focal point of COB is the order of benefit determination where two or more group health insurance policies apply to the same loss. Generally, the order of benefit determination rules imposed by the proposed regulation are as follows:

1. If the other plan in question has no COB provisions, the other plan is primary.

2. If both plans have similar COB provisions, the plan determines the order of benefits using the first of the following which apply:

a. The plan which covers the person as a group member rather than as a dependent of a group member.

b. If the claimant is the dependent child whose parents are not separated or divorced, the plan covering the parent whose birthday falls earlier in the year is primary. If both parents' birthdays fall on the same day, the plan which has been in effect the longest time is primary.

c. If the claimant is a dependent child whose parents are separated or divorced, the plan of the parent with custody of the child is primary, followed by the plan of the spouse of the parent with custody, and, finally, the plan of the parent not having custody of the child. However, if a judicial decree states that one of the parents is responsible for the health care expenses of the child, and that parent's insurer has actual knowledge of this judicial order, that plan is primary.

d. If a plan covers a person as an active employee, it is primary to the benefits of a plan which covers that person as a laid off or retired employee.

e. If none of the above rules determines the order of benefits, the plan which has covered the group member the longest period of time is primary.

The proposed regulation also contains the definition of a "plan" and other relevant definitions. The proposed regulation also contains a Model Contract Provision for use by insurers. This Model Contract Provision, or any other contract provision used by insurers, must comply with the rules established by Section 4 of the proposed regulation.

The regulation becomes effective January 1, 1987. This is the "target date" established by the National Association of Insurance Commissioners for implementation of its Model Regulation on Coordination of Benefits. The proposed regulation is substantially identical to the NAIC Model.

(1) Type and number of entities affected: The regulation applies to group health insurance contracts delivered, issued for delivery, or renewed in Kentucky. There are approximately 400 insurers, non-profit health service corporations, health maintenance organizations, and prepaid dental plan organizations transacting business in Kentucky. The proposed regulation will also affect the health insurance benefits and costs of all Kentuckians covered by group health insurance and groups paying for such coverage.

(a) Direct and indirect costs or savings to those affected: The proposed regulation itself will have little cost or savings impact because coordination of benefits is already in use. However, by making the rules relating to non-duplication of group health insurance benefits more uniform, the proposed regulation will preserve the savings from COB for insurers, claimants, and persons paying for group health insurance coverage.

1. First year:

2. Continuing costs or savings:

3. Additional factors increasing or decreasing costs (note any effects upon competition):

(b) Reporting and paperwork requirements: Group health insurance contracts must comply with the coordination of benefits guidelines contained in the proposed regulation. However, since similar guidelines are being adopted in most states, imposing such guidelines through the proposed regulation should not be burdensome.

(2) Effects on the promulgating administrative body: The adoption of formal coordination of benefits guidelines will result in savings to the Department because the guidelines will become well known.

(a) Direct and indirect costs or savings:

1. First year:

2. Continuing costs or savings:

3. Additional factors increasing or decreasing costs:

(b) Reporting and paperwork requirements:

(3) Assessment of anticipated effect on state and local revenues: None

(4) Assessment of alternative methods; reasons why alternatives were rejected: No alternatives were considered because HB 607 requires the Commissioner to prescribe coordination of benefits guidelines.

(5) Identify any statute, administrative regulation or government policy which may be in conflict, overlapping, or duplication: None

(a) Necessity of proposed regulation if in conflict:

(b) If in conflict, was effort made to harmonize the proposed administrative regulation with conflicting provisions:

(6) Any additional information or comments:

Tiering:
Was tiering applied? Tiering has been applied in some minor aspects of the proposed regulation. While the proposed regulation contains a Model Contract Provision, insurers are allowed to use alternative language in some situations and are allowed to use alternative terminology and to tailor the format of the contract provisions to fit their contracts.

CABINET FOR HUMAN RESOURCES

900 KAR 1:006. Limitation on indirect administrative cost in contracts.

RELATES TO: HB 398, 1986 Acts of the General Assembly, Part I

PURSUANT TO: KRS 194.050; HB 398, 1986 Acts of the General Assembly, Part I

NECESSITY AND FUNCTION: In accordance with its intent to focus the resources of the Cabinet for Human Resources on direct service provision and minimize indirect administrative expenses, the General Assembly, Regular Session, 1986 established a limit of fifteen (15) percent on indirect administrative cost for all contracts between the cabinet and non-state government agencies and individuals with certain exceptions. HB 398 requires the cabinet to

promulgate administrative regulations which address allocation and define direct and indirect costs. This regulation sets forth definitions and provisions necessary to implement this indirect administrative cost limitation in contracts. This regulation applies to Cabinet for Human Resources contracts for the 1986-87 and 1987-88 fiscal years.

Section 1. Definitions. As used in this regulation, the following definitions shall apply unless the specific context dictates otherwise.

(1) "Direct costs" means those costs that can be identified specifically with and charged in whole or in part to a particular project, service, program or activity of an organization.

(2) "Indirect costs" means those costs of an organization which are not specifically identifiable with a particular project, service, program, or activity but nevertheless are necessary to the general operation of the organization and the conduct of the activities it performs.

(3) "Administrative activities" means those activities performed by an organization in the development and implementation of policy and the management of the organization necessary to fulfill the functions and obligations of the organization. These activities generally include, but are not limited to, agency and personnel management, accounting, auditing, and legal services.

(4) "Service activities" means those activities carried out by an organization which are integral and necessary to the production and/or delivery of specific products and/or services.

(5) "Indirect administrative costs" means those costs for administrative activities of an organization which are not specifically identifiable with a particular project, service, program, or activity.

(6) "Cost allocation plan" means the written description of processes for identification, accumulation, and distribution of costs together with the allocation methods used.

Section 2. Indirect Administrative Cost Limitation in Contracts. (1) The Cabinet for Human Resources will limit payment to contractors for indirect administrative cost to no more than fifteen (15) percent of the contract total. For the purpose of this regulation, contract total means total actual, allowable expenses reimbursed by the cabinet.

(2) The provisions of this regulation are applicable to all types of contracts (except as exempted herein) between the cabinet and non-state government agencies and individuals including, but not limited to: cost reimbursement type contracts; competitively bid or negotiated fixed price contracts; program administration contracts; and, personal service contracts.

(3) When offering a contract for bid or negotiation, the cabinet shall clearly indicate that the state will limit its reimbursement of indirect administrative cost to no more than fifteen (15) percent of the total actual allowable expenses reimbursed by the cabinet. If total indirect administrative cost exceeds such limit, the additional expense shall be the responsibility of the contractor and not the Commonwealth.

(4) In cases where payment to a contractor is made on a fixed price/fixed fee basis and the fixed price/fixed fee is established based upon a consideration of a prior year and/or current year actual, allowable cost (e.g., regional mental health/mental retardation boards), such contracts shall be subject to the indirect administrative cost limitations set forth herein.

(5) There shall be no restrictions or limitations on indirect administrative costs paid for with contractor local funds and used to satisfy in-kind or matching requirements.

(6) In the event more restrictive contract provisions or federal and/or state laws and/or regulations apply to a particular contract, such laws, regulations, or contract provisions shall prevail with respect to limitations on indirect administrative cost.

(7) In the event that training involving contracted services and related agency skills and resources are requested by the cabinet and provided by a contractor in accordance with HB 398, costs related to such activity will be considered a direct cost and not subject to indirect administrative cost limitations.

(8) In the event an audit results in a finding that the indirect administrative cost limitations set forth herein has been exceeded for the period of performance under the contract, payment made by the cabinet to the contractor in consideration of such cost shall be subject to recovery from the contractor by the cabinet.

Section 3. Allocation Plan Required. A contractor shall maintain a written plan for allocation of direct and/or indirect costs in instances where the contractor organization operates more than one (1) project, service, program or activity. The general requirement for any cost allocation plan is that it shall provide for an equitable distribution of allocable direct costs and indirect costs to each project, service, program or activity that benefits from such costs and must be consistently and uniformly applied. Only those costs that are not specifically identifiable to a single project, service, program or other direct activity shall be allocated.

Section 4. Documentation Requirements for Costs. (1) All direct or allocable direct charges shall be documented by appropriate source documents to support the direct charging of the expense.

(2) The contractor shall document the method used to allocate direct and/or indirect costs.

(3) The contractor shall indicate the allowable indirect administrative cost amount and the percentage such amount represents in each contract budget and/or the final expenditure report as an indication of compliance.

(4) Reports of audits performed to meet federal and/or state requirements and which are conducted by independent public auditors, cabinet auditors, and/or the state auditor, shall contain a statement as to the compliance of the contractor with the cost limitations set forth herein.

Section 5. Subcontracts. In the event the primary contractor subcontracts with any

non-state government agency or organization or individual pursuant to or relating to its contract with the Cabinet for Human Resources, the indirect administrative cost of the primary contractor shall not exceed fifteen (15) percent of the total actual, allowable expenses reimbursed by the cabinet excluding such subcontracted costs. The indirect administrative cost of the subcontractor shall not exceed fifteen (15) percent of the total actual, allowable expenses reimbursed by the primary contractor to the subcontractor. Exceptions to such division of indirect administrative cost between the primary contractor and the subcontractor shall be subject to case-by-case negotiation between the cabinet and the prime contractor. In such cases where an exception to the limits is deemed reasonable and justifiable, the negotiated limit(s) together with the reasons for the exception shall be expressed in the terms and conditions of the resulting contract. In no event shall combined indirect administrative cost of the prime contractor and subcontractor(s) in the aggregate exceed fifteen (15) percent of the total actual, allowable expenses reimbursed by the cabinet.

Section 6. Exceptions. Contracts which may be exempt from the fifteen (15) percent indirect administrative cost limitations contained herein are set forth below:

(1) Contracts for Medicaid benefits shall be exempt from the cost limitations set forth herein;

(2) A contract for a service which is predominantly administrative in nature may be exempted provided that:

(a) The Secretary of the Cabinet for Human Resources certifies such fact and also documents why such service cannot be performed by state employees; and,

(b) The Secretary of the Finance and Administration Cabinet concurs and authorizes such exception;

(3) A contract which is competitively solicited and/or competitively negotiated may be exempted only when such exemption results in award of the contract to the lowest priced and/or best proposal submitted by prospective contractors provided that:

(a) The Secretary of the Cabinet for Human Resources approves such exemption; and,

(b) The Secretary of the Finance and Administration Cabinet concurs and authorizes such exemption; or,

(4) A contract which does not exceed a total amount of $100,000.00 and for which state funds comprise not less than seventy-five (75) percent of the fund sources available for such contract may be exempted from the fifteen (15) percent provided that:

(a) Combined actual allowable direct and indirect administrative costs shall not exceed twenty-five (25) percent of the total actual, allowable expenses reimbursed by the cabinet;

(b) The Secretary of the Cabinet for Human Resources approves such exemption; and,

(c) The Secretary of the Finance and Administration Cabinet concurs and authorizes such exemption.

E. AUSTIN, JR., Secretary

APPROVED BY AGENCY: May 14, 1986

FILED WITH LRC: May 23, 1986 at 8 a.m.

PUBLIC HEARING SCHEDULED: A public hearing on this regulation has been scheduled for July 21, 1986 at 9 a.m. in the Department for Health Services Auditorium, 275 East Main Street, Frankfort, Kentucky. However, this hearing will be cancelled unless interested persons notify the following office in writing by July 16, 1986 of their desire to appear and testify at the hearing: Ryan Halloran, Acting General Counsel, Cabinet for Human Resources, 275 East Main Street, 4 West, Frankfort, Kentucky 40621.

REGULATORY IMPACT ANALYSIS

Agency Contact Person: John Cubine

(1) Type and number of entities affected: Contract Agencies: Approximately 450.

(a) Direct and indirect costs or savings to those affected:

1. First year: No impact/cost avoidance.

2. Continuing costs or savings: No impact/cost avoidance.

3. Additional factors increasing or decreasing costs (note any effects upon competition): None

(b) Reporting and paperwork requirements: No significant increase in recordkeeping requirements.

(2) Effects on the promulgating administrative body:

(a) Direct and indirect costs or savings:

1. First year: No impact/cost avoidance.

2. Continuing costs or savings: No impact/cost avoidance.

3. Additional factors increasing or decreasing costs: None

(b) Reporting and paperwork requirements: No additional required.

(3) Assessment of anticipated effect on state and local revenues: No direct impact anticipated.

(4) Assessment of alternative methods; reasons why alternatives were rejected: Regulation required by HB 398.

(5) Identify any statute, administrative regulation or government policy which may be in conflict, overlapping, or duplication: None

(a) Necessity of proposed regulation if in conflict:

(b) If in conflict, was effort made to harmonize the proposed administrative regulation with conflicting provisions:

(6) Any additional information or comments:

Tiering:

Was tiering applied? No. No regulations currently exist relative to this subject.

ADMINISTRATIVE REGULATION REVIEW SUBCOMMITTEE

Minutes of the June 9-10, 1986 Meeting

The June meeting of the Administrative Regulation Review Subcommittee was held on Monday, June 9, 1986 at 2:30 p.m. and on Tuesday, June 10, 1986 10 a.m. in Room 103. Representative Bill Brinkley, Chairman, called the meeting to order, and the secretary called the roll. On motion of Represenative Bruce, seconded by Representative Meyer, the minutes of the May 5-6, 1986 meeting were approved.

Present were:

Members: Representative Bill Brinkley, Chairman; Senators Harold Haering and Pat McCuiston; Representatives Jim Bruce and Joe Meyer.

Guests: Representative Don Blandford; Representative Woody Allen; Jim Ahler, Martin Glazer, Board of Accountancy; Dena M. Schickinger, Sarah M. Jackson, Board of Hairdressers and Cosmetologists; Tom Edwards, Bill Graves, Don R. McCormick, John Phillips, Lauren Schaaf, Jeffery Sole, Department of Fish and Wildlife Resources; William S. Coakley, James W. Dills, Ann Margaret Griffin, Marjorie Mullen, Amarjit Sidhu, Natural Resources and Environmental Protection Cabinet; Michael Bradley, Linda G. Cooper, Corrections Cabinet; Gary Bale, Rita Lindsey, Akeel Zaheer, Department of Education; Victoria Coleman, Board of Tax Appeals; Patrick Watts, Department of Insurance; William E. Doyle, Department of Financial Institutions; George Geoghegan, Carl B. Larsen, Harness Racing Commission; Betty Beshoar, Roy Butler, Barbara Coleman, Eva Ellis, Ked Fitzpatrick, Eric Friedlander, Vic Gausepohl, Eugenia Jump, Delano Miller, William A. Robinson, Phillip R. Spangler, Sue Tutt, R. Hughes Walker, Wayne Westwood, Carole Wilson, Cabinet for Human Resources; Ted Bradshaw, KY Bankers Association; Teresa Champion, KY Association of Health Care Facilities; D. Ray Gillespie, Cardinal Industries - KY Hotel-Motel Association; Penny Gold, KY Academy of Trial Attorneys

The Administrative Regulation Review Subcommittee met on June 9 and 10, 1986, and submits the following report:

Press: Mark York, WLEX-TV

LRC Staff: Susan Wunderlich, Joe Hood, Gregory Karambellas, Donna Valencia, and Carla Arnold.

The Subcommittee determined that attachments be made to the following regulations:

General Government Cabinet: Board of Accountancy

201 KAR 1:067 (Quality Enhancement Program.) The Subcommittee determined that this regulation was authorized under the provisions of KRS 325.240 authorizing the Board to adopt regulations for the administration of KRS Chapter 325 and in order to promulgate rules of professional conduct needed to establish and maintain a high standard of integrity in the profession. Representative Meyer asked for an explanation of the procedure the Board would employ and what actions the Board would take on its findings after a review of the audits licensees would be required to submit. Board personnel replied that the Board would require the licensee to make the changes recommended after a review of the audits submitted. If the Board felt that disciplinary action against a licensee was warranted, it would order a full investigation but would not take disciplinary action simply on the basis of the review of audits. In response to further questions, Board personnel stated that generally accepted accounting procedures are the standards employed on review of audits and other material submitted by licensees, and that any action taken by the Board would comply with the hearing procedures and requirements of KRS Chapter 325.

The Subcommittee approved a motion referring this regulation to the Interim Joint Committee on Business Organizations and Professions for legislative recommendations that may be required under the provisions of House Bill 310.

General Government Cabinet: Board of Hairdressers and Cosmetologists

201 KAR 12:110 (School license.) The Subcommittee stated that the requirements of KRS Chapter 317A that three members of the Board either own or have a substantial financial interest in salons or cosmetology schools Board representatives argued against the regulation. Board personnel stated that the regulation would not prohibit a member from serving on the Board if he owned a salon or had an interest in a school; it would preclude a Board member from obtaining an additional license. They stated that licenses and schools were limited in number; that it was not possible to notify those who would want to apply when a license was vacated; that the Board wanted to avoid a potential problem when the "first in time" applicant was a Board member. Representative Meyer asked whether a notice of a vacated license could not be mailed to hairdressers and cosmetologists, or whether an association of hairdressers and cosmetologists could not notify them. Board personnel stated that there were approximately 32,000 licensees. In response to a question by Representative Meyer, Board personnel stated that the number of schools was not established by statute but by the Board. Representative Brinkley stated that the Subcommittee understood the nature of the problem facing the Board, and the intent of the Board in promulgating this regulation. Because of the questions raised concerning statutory authorization, the Subcommittee approved a motion by Representative Brinkley that this regulation be referred to the Interim Joint Committee on Business Organizations and Professions for legislative recommendations. The Board amended Section 14(c) of the regulation to delete the words, "the effective date of this regulation" and to insert in lieu thereof, "June 9, 1986".

Corrections Cabinet: Office of the Secretary

501 KAR 6:070 (Kentucky Correctional Institution for Women.) Representatives Brinkley and Meyer raised questions concerning the Corrections Cabinet's policy on strip searching of visitors. It was pointed out that KCIW 16-03-01, a manual incorporated by reference,

authorized strip searches with the permission of the state police. An objection was raised concerning the authority of the cabinet to permit the state police to authorize a strip search. The cabinet responded that if it has reasonable suspicion that a visitor is carrying drugs or contraband, it will request the visitor to submit to a strip search. It was pointed out by Representative Brinkley and Meyer that the state police are held to the higher standard of probable cause. Questions revolved around the issue of whether the cabinet would, on reasonable suspicion, hold or detain a visitor who refused to submit to a search for the state police. After a lengthy discussion, the cabinet seemed to state that if the state police do not have probable cause that the visitor is carrying contraband, then the cabinet would allow the visitor to leave the facility. Representative Brinkley questioned the authority of the cabinet to detain a visitor on reasonable suspicion for a strip search by the state police who are required to base detention or search on probable cause. He asked why the cabinet did not conduct a strip search itself if it had reasonable suspicion that the visitor was concealing drugs or other contraband since its personnel were considered peace officers. The Subcommittee approved a motion that this regulation be referred to the Interim Joint Committee on Judiciary-Criminal for legislative recommendations and to report its findings to the subcommittee.

The Subcommittee determined that the following regulations, amended as agreed by the subcommittee and promulgating body, complied with KRS Chapter 13A:

Tourism Cabinet: Department of Fish and Wildlife Resources: Game
301 KAR 2:047 (Specified areas; seasons, limits for birds and small game.) This regulation was amended to clarify which counties are included in specific wildlife management areas.

Education and Humanities Cabinet: Department of Education: Office of Instruction: Instructional Services
704 KAR 3:345 (Evaluation guidelines.) This regulation was amended to conform with language in the statutes.

Public Protection and Regulation Cabinet: Board of Tax Appeals: Tax Appeals
802 KAR 1:010 (Rules of practice and procedure.) This regulation was amended to clarify that appeals shall be filed within thirty days of the date of the mailing of the board's ruling, order or determination in order to conform to the statute.

Public Protection and Regulation Cabinet: Harness Racing Commission: Harness Racing Rules
811 KAR 1:215 (Kentucky Standardbred Development Fund.) This regulation was technically amended to add the word "or" after the words "frozen, desiccated,".

Cabinet for Human Resources: Department for Social Insurance: Medicaid Services
904 KAR 1:019 (Pharmacy services.) The following amended was made by the agency: "(3) "Drug manufacturer or distributor" means those companies which the KMAP request to provide directly to the KMAP pricing or cost information which will be used in establishing the estimated acquisition cost upper limit as required by federal regulations." An additional amendment was made to list KRS 205.560(1)(a)-(c) in the "Pursuant to" section of the regulation.
904 KAR 1:038 (Hearing and vision services.) Section 3 of the regulation was deleted so that ophthalmologists and optometrists could be covered under Medicaid Services. This amendment was made by the subcommittee and agency in order that the regulation comply with the statutes.

The Subcommittee determined that the following regulations complied with KRS Chapter 13A:

Tourism Cabinet: Department of Fish and Wildlife Resources:Fish
301 KAR 1:015 **(Boats and outboard motors; size limits.)**
Game
301 KAR 2:040 **(Upland game shooting preserves.)**
301 KAR 2:045 **(Upland game birds, furbearers and small game; seasons, limits.)**
301 KAR 2:170 **(Seasons for deer hunting.)**
Hunting and Fishing
301 KAR 3:010 **(Depredation of wildlife areas.)**
301 KAR 3:030 **(Year-round season for some birds and animals.)**
Wildlife
301 KAR 4:050 **(Swan Lake Wildlife Management Area restrictions.)**

Natural Resources and Environmental Protection Cabinet: Department for Environmental Protection: General Administrative Procedures
401 KAR 50:035 **(Permits.)**
401 KAR 50:042 **(Good engineering practice stack height.)**

Corrections Cabinet: Office of the Secretary
501 KAR 6:020 **(Corrections policies and procedures.)**
501 KAR 6:030 **(Kentucky State Reformatory.)**
501 KAR 6:040 **(Kentucky State Penitentiary.)**
501 KAR 6:050 **(Luther Luckett Correctional Complex.)**
501 KAR 6:060 **(Northpoint Training Center.)**
501 KAR 6:080 **(Corrections Cabinet Manuals.)**
501 KAR 6:090 **(Frankfort Career Development Center.)**

Education and Humanities Cabinet: Office of Instruction: Teacher Certification
704 KAR 20:015 **(Rank I classification.)**

Department of Insurance: Group and Blanket Health Insurance
806 KAR 18:020 **(Preferred and exclusive provider arrangements.)**

Department of Financial Institutions: Securities
808 KAR 10:210 **(Registration exemptions - Federal Regulation D.)**
808 KAR 10:230 **(Fee payment - KRS 292.380(5).)**
808 KAR 10:240 **(Registration exemptions - Sale of business.)**

Harness Racing Commission: Harness Racing Rules
811 KAR 1:090 **(Stimulants and drugs.)**

811 KAR 1:225 (Substance abuse by commission employees and licensees.) In response to questions by Representatives Bruce and Meyer, agency personnel stated that testing for drugs is done either at random or of all of a class; that testing for drugs is generally done on an individual basis if it is supported by probable cause to test;that either all drivers are tested for alcohol; or, if probable cause exists with regard to one driver, individual testing for alcohol is done; that a blood content of .05 or more would result in a prohibition of participating; that the standards are those of the National Association of Standardbred Racing Commissioners; that no licensee objected.

Cabinet for Human Resources: Department for Health Services: Local Boards of Health
902 KAR 8:020 (Policies and procedures for local health department operations.)
Hospitalization of Mentally Ill and Mentally Retarded
902 KAR 12:080 (Policies and procedures for mental health/mental retardation facilities.)
Department for Employment Services: Unemployment Insurance
903 KAR 5:260 (Unemployment insurance procedures.)
Department for Social Insurance: Medical Assistance
904 KAR 1:009 (Physicians' services.)
Public Assistance
904 KAR 2:190 (Incorporation by reference of materials relating to the Refugee Assistance Program.)
Food Stamp Program
904 KAR 3:035 (Certification process.)
Department for Social Services: Aging Services
905 KAR 8:030 (Meal standards for the Older Americans Act.)
Department for Medicaid Services: Medicaid Services
907 KAR 1:007 (Documentation of medical assistance services.)

The Subcommittee had no objections to emergency regulations which had been filed.

The Subcommittee deferred the following regulation at the request of the promulgating administrative body:

Cabinet for Human Resources: Department for Health Services: Certificate of Need and Licensure
902 KAR 20:210 (General health services licensure.)
Chairman Brinkley and Representative Meyer requested the following information from agency personnel: (1) What specific health services are governed by this regulation? (2) If there are specific health services governed by this regulation, why aren't they cited? (3) If there are no specific health services, why is the regulation needed? (4) How would any health service governed by this regulation know that it was governed by this regulation? (5) How would it know which of the alternative licensure procedures or requirements it must meet? They stated that under this regulation, a health service would not know on application for licensure what standards or requirements it must meet. It would know only after an inspection which criteria it must meet. The agency would determine the applicable criteria or standards on an ad hoc basis. There would be no advance notice of the specific requirements. They added that under this regulation, a health service is not provided alternative procedures. In reality, the cabinet will determine standards, rules, criteria, as it chooses. KRS 13A requires these specific matters to be set out in a regulation. It was pointed out that, under other regulations such as 902 KAR 20:140-200, all other known health services appear to have specific standards or requirements set out in administrative regulations. Representatives Brinkley and Meyer suggested that if the cabinet is afraid that certain unspecified health services won't be covered by existing regulations, the very least that should be required would be a regulation listing criteria or standards or requirements that all health services must meet. Such a regulation could contain a provision that a health service must meet its requirements unless another regulation applies specifically to it. They suggested that it would be better to promulgate a regulation governing a specific health service and amend it as conditions warranted, and pointed out that the regulation being reviewed may regulate a type of service which the General Assembly has not authorized to be regulated. Chairman Brinkley pointed out that KRS Chapter 13A requires that conditions to licensure be promulgated as administrative regulations, that notice of such conditions be given those who are governed by them. Agency personnel agreed to defer this regulation and to meet with the staff of the Subcommittee and the staff of the Interim Joint Committee on Health and Welfare in order to revise the regulation.

Other Business:

The members approved a motion by Representative Meyer that the Subcommittee request that the Department of Library and Archives explain their selection procedures for allocating federal funds to public libraries, and directed the staff to prepare a memorandum to that effect.

The Subcommittee adjourned at 11 a.m. until July 1, 1986.

CUMULATIVE SUPPLEMENT

Locator Index - Effective Dates.....A2

KRS Index.....A4

Subject Index to Volume 12.....A5

LOCATOR INDEX -- EFFECTIVE DATES

NOTE: Emergency regulations expire 90 days from publication or upon replacement or repeal.

VOLUME 12

Regulation	12 Ky.R. Page No.	Effective Date
106 KAR 1:050	1958	
201 KAR 1:067	1792	6-10-86
201 KAR 12:110		
Amended	1731	6-10-86
301 KAR 1:015		
Amended	1733	6-10-86
301 KAR 2:040		
Amended	1734	6-10-86
301 KAR 2:045		
Amended	1737	6-10-86
301 KAR 2:111		
Amended	1841	
301 KAR 2:170		
Amended	1742	6-10-86
301 KAR 3:010		
Amended	1746	6-10-86
301 KAR 3:030		
Amended	1746	6-10-86
301 KAR 4:050	1793	6-10-86
401 KAR 50:035		
Amended	1748	6-10-86
401 KAR 50:042		
Amended	1794	6-10-86
501 KAR 6:020		
Amended	1753	6-10-86
Amended	1844	
501 KAR 6:030	1797	6-10-86
Amended	1845	
501 KAR 6:040	1799	6-10-86
Amended	1847	
501 KAR 6:050	1801	6-10-86
Amended	1848	
501 KAR 6:060	1802	6-10-86
Amended	1850	
501 KAR 6:070	1803	6-10-86
501 KAR 6:080	1805	6-10-86
Amended	1851	
501 KAR 6:090	1806	6-10-86
Amended	1852	
603 KAR 7:020		
Amended	1853	
702 KAR 5:020		
Amended	1854	
702 KAR 5:080		
Amended	1857	
702 KAR 5:110		
Amended	1859	
702 KAR 7:020		
Amended	1861	
704 KAR 3:304		
Amended	1862	
704 KAR 3:320		
Amended	1863	
704 KAR 3:325		
Amended	1864	
704 KAR 3:335		
Amended	1866	
704 KAR 3:345		
Amended	1837	6-10-86
704 KAR 3:355		
Amended	1867	
704 KAR 7:020		
Amended	1871	
704 KAR 10:022		
Amended	1872	
704 KAR 15:080		
Amended	1874	
704 KAR 20:005		
Amended	1875	
704 KAR 20:015		
Amended	1839	6-10-86
704 KAR 20:045		
Amended	1867	
704 KAR 20:095		
Amended	1878	
704 KAR 20:135		
Amended	1879	
704 KAR 20:222		
Amended	1880	
704 KAR 20:305		
Amended	1883	
704 KAR 20:310		
Amended	1886	
704 KAR 20:320		
Amended	1888	
704 KAR 20:330	1961	
705 KAR 1:010		
Amended	1891	
705 KAR 2:030		
Amended	1892	
706 KAR 1:010		
Amended	1894	
706 KAR 1:020		
Amended	1895	
709 KAR 1:080	1962	
750 KAR 1:010	1962	
802 KAR 1:010		
Amended	1760	6-10-86
806 KAR 18:020		
Amended	1840	6-10-86
807 KAR 5:067		
Amended	1895	
807 KAR 5:068	1965	
808 KAR 10:210		
Amended	1762	6-10-86
808 KAR 10:230		
Amended	1763	6-10-86
808 KAR 10:240	1806	6-10-86
811 KAR 1:090		
Amended	1765	6-10-86
811 KAR 1:215		
Amended	1767	6-10-86
811 KAR 1:225	1807	6-10-86
815 KAR 20:001	1967	
815 KAR 20:030		
Amended	1899	
902 KAR 8:020		
Amended	1769	6-10-86
902 KAR 12:080		
Amended	1772	6-10-86
Amended	1901	
902 KAR 20:210	1809	
902 KAR 50:030		
Amended	1907	
902 KAR 50:050		
Amended	1913	
902 KAR 50:110		
Amended	1918	
903 KAR 5:260		
Amended	1782	6-10-86
Amended	1919	

Regulation	12 Ky.R. Page No.	Effective Date
904 KAR 1:009		
Amended	1784	6-10-86
Recodified		6-10-86
904 KAR 1:013		
Amended	1922	
904 KAR 1:036		
Amended	1924	
904 KAR 1:220		
Amended	1787	
904 KAR 2:016		
Amended	1931	
904 KAR 2:020		
Amended	1935	
904 KAR 2:022		
Amended	1938	
904 KAR 2:140		
Amended	1943	
904 KAR 2:150		
Amended	1944	

Regulation	13 Ky.R. Page No.	Effective Date
904 KAR 2:190		
Amended	1789	6-10-86
904 KAR 3:020	1946	
904 KAR 3:035		
Amended	1789	6-10-86
904 KAR 3:090		
Amended	1949	
905 KAR 1:180		
Amended	1950	
905 KAR 8:030		
Amended	1791	6-10-86
907 KAR 1:004		
Amended	1951	
907 KAR 1:007	1811	6-10-86
907 KAR 1:028		
Amended	1955	
907 KAR 1:250		
Amended	1956	

VOLUME 13

Emergency Regulation	13 Ky.R. Page No.	Effective Date
501 KAR 6:020E		
Replaced	4	5-16-86
Resubmitted	4	5-16-86
900 KAR 1:006E	5	5-23-86
904 KAR 2:016E	7	5-16-86
905 KAR 1:180E	11	5-16-86

Regulation	13 Ky.R. Page No.	Effective Date
11 KAR 3:040		
Amended	18	
11 KAR 5:010		
Amended	19	
11 KAR 5:030		
Amended	20	
11 KAR 5:031	92	
11 KAR 7:010		
Amended	21	
11 KAR 7:020	93	
11 KAR 8:010	94	
11 KAR 8:020	96	
11 KAR 9:010	98	
103 KAR 15:050		
Amended	26	
103 KAR 16:070		
Amended	27	
103 KAR 16:080		
Amended	30	
103 KAR 16:090		
Amended	33	
103 KAR 17:080		
Amended	35	
103 KAR 43:240	99	
105 KAR 1:010		
Amended	36	
105 KAR 1:040		
Amended	38	
201 KAR 6:010		
Amended	41	
301 KAR 2:047		
Amended	12	6-10-86
301 KAR 3:080	100	
401 KAR 5:090		
Amended	44	
904 KAR 2:170		
Amended	1945	

Regulation	13 Ky.R. Page No.	Effective Date
500 KAR 1:010		
Amended	48	
500 KAR 1:020		
Amended	50	
501 KAR 6:020		
Amended	52	
501 KAR 6:030		
Amended	53	
501 KAR 6:040		
Amended	55	
501 KAR 6:050		
Amended	56	
501 KAR 6:070		
Amended	58	
501 KAR 6:080		
Amended	59	
501 KAR 6:110	101	
600 KAR 1:080	102	
600 KAR 3:010	103	
605 KAR 1:150		
Amended	60	
803 KAR 2:015		
Amended	61	
803 KAR 2:020		
Amended	78	
806 KAR 18:030	104	
900 KAR 1:006	110	
902 KAR 8:020		
Amended	82	
902 KAR 12:060		
Amended	85	
902 KAR 16:010		
Amended	86	
903 KAR 5:260		
Amended	87	
903 KAR 5:270		
Amended	89	
904 KAR 1:019		
Amended	15	6-10-86
Recodified		6-10-86
904 KAR 1:038		
Amended	16	6-10-86
Recodified		6-10-86
904 KAR 1:220		
Amended	17	
904 KAR 3:045		
Amended	90	
905 KAR 1:190		
Repealed	11	5-16-86

KRS INDEX

KRS Section	Regulation
6.525	103 KAR 17:080
Chapter 13A	600 KAR 1:080
16.505-16.652	105 KAR 1:010
	105 KAR 1:040
21.470	103 KAR 17:080
56.610-56.760	600 KAR 3:010
61.315	500 KAR 1:010
	500 KAR 1:020
61.510-61.705	105 KAR 1:010
	105 KAR 1:040
61.690	103 KAR 17:080
78.510-78.852	105 KAR 1:010
	105 KAR 1:040
138.220	103 KAR 43:240
138.270	103 KAR 43:240
138.565	103 KAR 43:240
141.021	103 KAR 17:080
141.042	103 KAR 15:050
141.120	103 KAR 16:070
	103 KAR 16:080
	103 KAR 16:090
141.170	103 KAR 15:050
141.300	103 KAR 15:050
150.010	301 KAR 3:080
150.015	301 KAR 3:080
150.025	301 KAR 3:080
150.360	301 KAR 3:080
150.600	301 KAR 3:080
Chapter 151	401 KAR 5:090
156.611	11 KAR 7:010
	11 KAR 7:020
156.613	11 KAR 8:010
	11 KAR 8:020
164.2871	103 KAR 17:080
164.740	11 KAR 3:040
164.740-164.764	11 KAR 5:010
	11 KAR 5:030
164.740-164.785	11 KAR 5:031
164.744	11 KAR 3:040
	11 KAR 9:010
164.748	11 KAR 3:040
	11 KAR 9:010
164.766	11 KAR 3:040
164.780	11 KAR 5:010
	11 KAR 5:030
164.785	11 KAR 5:010
	11 KAR 5:030

KRS Section	Regulation
174.080	600 KAR 3:010
183.024	600 KAR 3:010
190.010-190.080	605 KAR 1:150
194.030	902 KAR 16:010
194.050	904 KAR 3:045
Chapter 196	501 KAR 6:020
	501 KAR 6:030
	501 KAR 6:040
	501 KAR 6:050
	501 KAR 6:070
	501 KAR 6:080
	501 KAR 6:110
Chapter 197	501 KAR 6:020
	501 KAR 6:030
	501 KAR 6:040
	501 KAR 6:050
	501 KAR 6:070
	501 KAR 6:080
	501 KAR 6:110
205.200	902 KAR 16:010
205.245	902 KAR 16:010
205.510-205.990	904 KAR 1:220
205.520	902 KAR 16:010
210.700-210.760	902 KAR 12:060
Chapter 212	902 KAR 8:020
Chapter 216A	201 KAR 6:010
Chapter 224	401 KAR 5:090
234.320	103 KAR 43:240
234.380	103 KAR 43:240
Chapter 338	803 KAR 2:015
	803 KAR 2:020
341.005-341.990	903 KAR 5:260
341.380	903 KAR 5:270
Chapter 439	501 KAR 6:020
	501 KAR 6:030
	501 KAR 6:040
	501 KAR 6:050
	501 KAR 6:070
	501 KAR 6:080
	501 KAR 6:110
Acts c. 433, 1986 GA	806 KAR 18:030
SB 16, 1986 GA	600 KAR 3:010
HB 209, 1986 GA	11 KAR 9:010
HB 390, 1986 GA	900 KAR 1:006

SUBJECT INDEX

CORRECTIONS
Policies, procedures; 501 KAR 6:020 and E
Kentucky Correctional Institution for Women; 501 KAR 6:070
Kentucky State Penitentiary; 501 KAR 6:040
Kentucky State Reformatory; 501 KAR 6:030
Luther Luckett Correctional Complex; 501 KAR 6:050
Roederer Farm Center; 501 KAR 6:110

EMPLOYMENT SERVICES (HUMAN RESOURCES)
Unemployment Insurance
Procedures; 903 KAR 5:260
Weekly benefit rates; 903 KAR 5:270

FISH AND WILDLIFE RESOURCES
Hunting and Fishing
Lead shot prohibition; 301 KAR 3:080

HEALTH SERVICES
Boards of Health, Local
Policies, procedures; 902 KAR 8:020
Disability Determination
Program; 902 KAR 16:010
Mental Health-Mental Retardation
Per diem rate; 902 KAR 12:060

HIGHER EDUCATION ASSISTANCE AUTHORITY
Distinguished Student Recognition and Scholarship Award Program
Program; 11 KAR 9:010
Grant Programs
Authority, purpose, name; 11 KAR 5:010
Repeal; 11 KAR 5:031
Student eligibility; 11 KAR 5:030
Incentive Loan Program
Deferment; 11 KAR 7:020
Math/science; 11 KAR 7:010
Kentucky Loan Program
Lender participation; 11 KAR 3:040
Teacher Scholarship Program
Deferment; 11 KAR 8:020
Program; 11 KAR 8:010

HUMAN RESOURCES
Administration
Cost limitation in contracts; 900 KAR 1:006 and E
Employment Services
Unemployment insurance; 903 KAR Chapter 5
Health Services
Boards of health, local; 902 KAR Chapter 8
Disability determination; 902 KAR Chapter 16
Mental health-mental retardation; 902 KAR Chapter 12
Medicaid services; 907 KAR Chapter 1 (recodified from 904 KAR Chapter 1)
Social Insurance
Food stamp program; 904 KAR Chapter 3
Public assistance; 904 KAR Chapter 2
Social Services
Child welfare; 905 KAR Chapter 1

INSURANCE
Health; Group, Blanket
Coordination of benefits; 806 KAR 18:030

JUSTICE
Peace Officer Death Benefits
Claims; 500 KAR 1:020
Definitions; 500 KAR 1:010

LABOR
Occupational safety, health; 803 KAR Chapter 2

MEDICAID SERVICES
Provider participation, appeals; 904 KAR 1:220

MOTOR VEHICLE COMMISSION
Temporary sales location; 605 KAR 1:150

NATURAL RESOURCES, ENVIRONMENTAL PROTECTION
Environmental Protection
Water; 401 KAR Chapter 5

NURSING HOME ADMINISTRATORS
Licensure; 201 KAR 6:010

OCCUPATIONAL SAFETY, HEALTH
General industry standards; 803 KAR 2:015
29 CFR Part 1910; 803 KAR 2:020

OCCUPATIONS AND PROFESSIONS
Nursing home administrators; 201 KAR Chapter 6

PUBLIC PROTECTION, REGULATION
Insurance
Health; group, blanket; 806 KAR Chapter 18

RETIREMENT
KERS
Contributions, interest rates; 105 KAR 1:010
Actuarial assumptions, tables; 105 KAR 1:040

REVENUE
(Also see Taxation)
Income Tax
Corporations; 103 KAR Chapter 16
General Administration; 103 KAR Chapter 15
Individual; 103 KAR Chapter 17
Selective Excise Tax
Motor fuels; 103 KAR Chapter 43

SOCIAL INSURANCE
Food Stamp Program
Coupon issuance procedures; 904 KAR 3:045
Public Assistance
AFDC standards; 904 KAR 2:016E

SOCIAL SERVICES
Child Welfare
DSS policy, procedures; 905 KAR 1:180E

TAXATION
Income Tax, Corporations
Apportionment, payroll factor; 103 KAR 16:090
Apportionment, property factor; 103 KAR 16:080
Apportionment, sales factor; 103 KAR 16:070
Income Tax, General Administration
Filing dates, extensions; 103 KAR 15:050
Income Tax, Individual
Retirement income; 103 KAR 17:080
Selective Excise Tax, Motor Fuels
Highway user motor fuel; 103 KAR 43:240

TOURISM
Fish and Wildlife Resources
Hunting, fishing; 301 KAR Chapter 3

TRANSPORTATION
Administration
Repeal; 600 KAR 1:080
Property Acquisition & Uniform Relocation
Payments; 600 KAR 3:010

WATER
Water Quality
Oil, gas facilities; 401 KAR 5:090