ADMINISTRATIVE REGISTER OF KENTUCKY

LEGISLATIVE RESEARCH COMMISSION
Frankfort, Kentucky

VOLUME 38, NUMBER 5
TUESDAY, NOVEMBER 1, 2011

ARRS - OCTOBER 11, 2011 TENTATIVE AGENDA 869
REGULATION REVIEW PROCEDURE.....871

REPRINT:
Board of Optometric Examiners.....872

EMERGENCIES:
Department of Fish and Wildlife.....874
Cabinet for Health and Family Services 880

AS AMENDED:
Education Professional Standards Board.....885
Personnel Board 890
Personnel Cabinet.....891
Board for Professional Engineers and Land Surveyors.....894
Board of Physical Therapy 896
Board of Respiratory Care.....897
Kentucky Applied Behavior Analysis Licensing Board.....899
Department of Agriculture 903
Justice and Public Safety Cabinet 907
Department of Insurance.....913
Department of Housing, Buildings and Construction 914
Cabinet for Health and Family Services 922

AMENDED AFTER COMMENTS
Kentucky Real Estate Appraisers Board 989
Department of Natural Resources 991
Cabinet for Health and Family Services 1007

PROPOSED AMENDMENTS RECEIVED THROUGH NOON, OCTOBER 14, 2011:
Personnel Board.....1011
Department of Revenue 1013
Board of Certification for Professional Counselors 1018
Board of Interpreters for the Deaf and Hard of Hearing.....1024
Department of Fish and Wildlife.....1038
Justice and Public Safety Cabinet 1051
Transportation Cabinet.....1052
Department of Insurance.....1057
Cabinet for Health and Family Services 1062

NEW ADMINISTRATIVE REGULATIONS RECEIVED THROUGH NOON OCTOBER 14, 2011:
Kentucky Real Estate Appraisers Board 1069
Board of Interpreters for the Deaf and Hard of Hearing.....1070
Department of Parks.....1072
Board of Education 1074

ARRS Report 1077
OTHER COMMITTEE REPORTS 1084

CUMULATIVE SUPPLEMENT
Locator Index - Effective Dates.....**E - 2**
KRS Index.....**E - 11**
Technical Amendments.....**E - 17**
Subject Index .....**E - 18**

MEETING NOTICE: ARRS

The **Administrative Regulation Review Subcommittee** is **tentatively** scheduled to meet November 7, 2011 at 1:00 p.m. in room 149 Capitol Annex. See **tentative agenda** on pages **869-870** of this Administrative Register.

The **ADMINISTRATIVE REGISTER OF KENTUCKY** is the monthly supplement for the 2011 Edition of **KENTUCKY ADMINISTRATIVE REGULATIONS SERVICE**.

HOW TO CITE: Cite all material in the **ADMINISTRATIVE REGISTER OF KENTUCKY** by Volume number and Page number. Example: Volume 38, Kentucky Register, page 318 (short form: 38 Ky.R. 318).

KENTUCKY ADMINISTRATIVE REGULATIONS are codified according to the following system and are to be cited by Title, Chapter and Regulation number, as follows:

Title		Chapter	Regulation
806	KAR	50:	155
Cabinet, Department, Board, or Agency		Office, Division, Board, or Major Function	Specific Regulation

ADMINISTRATIVE REGISTER OF KENTUCKY
(ISSN 0096-1493)
© 2011 Legislative Research Commission, All Rights Reserved

The Administrative Register of Kentucky is published monthly by the Legislative Research Commission, 700 Capitol Avenue, Room 300, Frankfort, Kentucky 40601. Subscription rate, postpaid in the United States: $96 (plus 6% Kentucky sales tax) per year for 12 issues, beginning in July and ending with the June issue of the subsequent year. Periodical postage paid at Frankfort, Kentucky.
POSTMASTER: Send address changes to Administrative Register of Kentucky, 700 Capitol Avenue, Room 64, State Capitol, Frankfort, Kentucky 40601.

KENTUCKY LEGISLATIVE RESEARCH COMMISSION

Chairmen

Senator David L. Williams
Senate President

Representative Gregory Stumbo
House Speaker

Senate and House Members

Senator Katie Kratz Stine
President Pro Tem

Senator Robert Stivers
Majority Floor Leader

Senator R.J. Palmer II
Minority Floor Leader

Senator Daniel Seum
Majority Caucus Chairman

Senator Johnny Ray Turner
Minority Caucus Chairman

Senator Carroll Gibson
Majority Whip

Senator Jerry P. Rhoads
Minority Whip

Representative Larry Clark
Speaker Pro Tem

Representative Rocky Adkins
Majority Floor Leader

Representative Jeffrey Hoover
Minority Floor Leader

Representative Robert R. Damron
Majority Caucus Chairman

Representative Bob DeWeese
Minority Caucus Chairman

Representative Tommy Thompson
Majority Whip

Representative Danny R. Ford
Minority Whip

Robert Sherman, Director
Joe Cox, Printing and Publications Officer

ADMINISTRATIVE REGULATION REVIEW SUBCOMMITTEE

Members

Senator Joe Bowen, Co-Chair
Representative Johnny Bell, Co-Chair
Senator David Givens
Senator Alice Forgy Kerr
Senator Joey Pendleton
Representative Robert Damron
Representative Danny R. Ford
Representative Jimmie Lee

Staff

Dave Nicholas
Emily Caudill
Donna Little
Sarah Amburgey
Emily Harkenrider
Karen Howard
Betsy Cupp
Laura Napier

ADMINISTRATIVE REGULATION REVIEW SUBCOMMITTEE
TENTATIVE AGENDA, NOVEMBER 7, 2011, at 1:00 p.m., Room 149 Capitol Annex

COUNCIL ON POSTSECONDARY EDUCATION

Public Educational Institutions

13 KAR 2:020. Guidelines for admission to the state-supported postsecondary education institutions in Kentucky.

PERSONNEL BOARD

Board

101 KAR 1:335 & E. Employee actions. ("E" expires 3/12/2012)

PERSONNEL CABINET

Personnel Cabinet, Classified

101 KAR 2:180. Employee performance evaluation system. (Deferred from October)

101 KAR 2:210 & E. 2012 Plan Year Handbook for the Public Employee Health Insurance Program. ("E" expires 3/13/2012)

FINANCE AND ADMINISTRATION CABINET
Department of Revenue

Ad Valorem Tax; State Assessment

103 KAR 8:010. Watercraft allocation. (Not Amended After Comments) (Deferred from September)

Kentucky Retirement Systems

General Rules

105 KAR 1:440. Kentucky Retirement Systems Trustee Education Program.

GENERAL GOVERNMENT CABINET
State Board of Accountancy

Board

201 KAR 1:160. Peer reviews.

Board of Social Work

Board

201 KAR 23:050. Renewal, termination, reinstatement of license.

201 KAR 23:075. Continuing education.

Real Estate Appraisers Board

Board

201 KAR 30:310 & E. Fees for registration of appraisal management companies. ("E" expires 2/10/12) (Amended After Comments)

201 KAR 30:320 & E. Surety bond. ("E" expires 2/10/12) (Not Amended After Comments)

201 KAR 30:330 & E. Application for registration. ("E" expires 2/10/12) (Deferred from October)

201 KAR 30:360. Operation of an appraisal management company. (Amended After Comments)

Board of Licensure for Orthotists, Prosthetists, Orthotists/Prosthetists, Pedorthists, or Orthotic Fitters

Board

201 KAR 44:010. Fees. (Not Amended After Comments)

201 KAR 44:020. Requirements for licensure as an Orthotist, Prosthetist, Orthotist/Prosthetist, Pedorthist, or Orthotic Fitter prior to January 1, 2013. (Not Amended After Comments)

201 KAR 44:030. Alternative Mechanism Requirements for licensure as an Orthotist, Prosthetist, Orthotist/Prosthetist, Pedorthist, or Orthotic Fitter prior to January 1, 2013 for applicants in practice who are not currently certified. (Not Amended After Comments)

201 KAR 44:040. Professional Conduct and Code of Ethics. (Not Amended After Comments)

201 KAR 44:050. Per diem of board members. (Not Amended After Comments)

TOURISM, ARTS AND HERITAGE CABINET
Department of Fish and Wildlife Resources

Game

301 KAR 2:225 & E. Dove, wood duck, teal, and other migratory game bird hunting. ("E" expires 2/10/12)

ENERGY AND ENVIRONMENT CABINET
Office of the Secretary
Kentucky State Nature Preserves Commission

Commission

400 KAR 2:090. Management, use, and protection of nature preserves. (Amended After Comments) (Deferred from September)

Department for Natural Resources
Division of Mine Reclamation and Enforcement

Surface Effects of Noncoal Mining

405 KAR 5:085. Enforcement. (Amended After Comments)

405 KAR 5:095. Administrative hearings, informal settlement conferences, and general practice provisions. (Amended After Comments)

General Provisions

405 KAR 7:091. General practice provisions. (Amended After Comments)

Inspection and Enforcement

405 KAR 12:020. Enforcement. (Amended After Comments)

JUSTICE AND PUBLIC SAFETY CABINET
Parole Board

Board

501 KAR 1:030. Determining parole eligibility.

501 KAR 1:080. Parole Board policies and procedure.

TRANSPORTATION CABINET
Office of Transportation Delivery

Mass Transportation
603 KAR 7:080. Human service transportation delivery. (Amended After Comments) (Deferred from October)

EDUCATION AND WORKFORCE DEVELOPMENT CABINET
Department of Workforce Investment
Office for the Blind

Department for the Blind
782 KAR 1:020. Definitions for 782 KAR Chapter 1.
782 KAR 1:030. Scope and nature of services.
782 KAR 1:040. Appeal procedures.
782 KAR 1:070. Certified driver training program.

Office of Employment and Training

Unemployment Insurance
787 KAR 1:210. Employer contribution rates.

PUBLIC PROTECTION CABINET
Department of Insurance
Agent Licensing Division

Agents, Consultants, Solicitors, and Adjusters
806 KAR 9:070. Examinations.

Financial Standards and Examination Division

Captive Insurers
806 KAR 49:050. Captive Risk Retention Groups.

ENERGY AND ENVIRONMENT CABINET
State Board on Electric Generations and Transmission Siting

Utilities
807 KAR 5:100. Board application fees.
807 KAR 5:110. Board proceedings.

PUBLIC PROTECTION CABINET
Horse Racing Commission

Thoroughbred Racing
810 KAR 1:090. Kentucky Thoroughbred Development Fund.

Department of Housing, Buildings and Construction
Division of Building Codes Enforcement

Kentucky Building Code
815 KAR 7:125. Kentucky Residential Code. (Not Amended After Comments)

CABINET FOR HEALTH AND FAMILY SERVICES
Department for Public Health
Office of Health Policy

Certificate of Need
900 KAR 6:075. Certificate of Need nonsubstantive review. (Amended After Comments)

Division of Public Health and Safety

Radiology
902 KAR 100:142. Wire line service operations.

Department for Developmental Health, Developmental and Intellectual Disabilities
Division of Behavioral Health

Substance Abuse
908 KAR 1:310. Certification standards and administrative procedures for driving under the influence programs. (Not Amended After Comments) (Deferred from October)

Division of Protection and Permanency

Child Welfare
922 KAR 1:420. Child fatality or near fatality investigations. ("E" expired 7/2/2011) (Deferred from March)

DEFERRED FROM NOVEMBER 2011 AGENDA

GENERAL GOVERNMENT CABINET
Board of Pharmacy

Board
201 KAR 2:170. Computerized recordkeeping. (Comments Received, SOC ext.)

ADMINISTRATIVE REGULATION REVIEW PROCEDURE - OVERVIEW
(See KRS Chapter 13A for specific provisions)

Filing and Publication

Administrative bodies shall file with the Regulations Compiler all proposed administrative regulations, public hearing and comment period information, regulatory impact analysis and tiering statement, fiscal note, federal mandate comparison, and incorporated material information. Those administrative regulations received by the deadline established in KRS 13A.050 shall be published in the Administrative Register.

Public Hearing and Public Comment Period

The administrative body shall schedule a public hearing on proposed administrative regulations which shall not be held before the 21st day or later than the last workday of the month of publication. Written comments shall also be accepted until the end of the calendar month in which the administrative regulation was published.

The administrative regulation shall include: the place, time, and date of the hearing; the manner in which persons may submit notification to attend the hearing and written comments; that notification to attend the hearing shall be sent no later than 5 workdays prior to the hearing date; the deadline for submitting written comments; and the name, position, address, and telephone and fax numbers of the person to whom notification and written comments shall be sent.

The administrative body shall notify the Compiler, by phone and letter, whether the hearing was held or cancelled and whether written comments were received. If the hearing was held or written comments were received, the administrative body shall file a statement of consideration with the Compiler by the fifteenth day of the calendar month following the month of publication.

A transcript of the hearing is not required unless a written request for a transcript is made, and the person requesting the transcript shall have the responsibility of paying for same. A recording may be made in lieu of a transcript.

Review Procedure

After the public hearing and public comment period processes are completed, the administrative regulation shall be reviewed by the Administrative Regulation Review Subcommittee at its next meeting. After review by the Subcommittee, the administrative regulation shall be referred by the Legislative Research Commission to an appropriate jurisdictional committee for a second review. The administrative regulation shall be considered as adopted and in effect as of adjournment on the day the appropriate jurisdictional committee meets or 30 days after being referred by LRC, whichever occurs first.

GENERAL GOVERNMENT CABINET
Kentucky Board of Optometric Examiners
(As Amended at ARRS, September 13, 2011)

201 KAR 5:110. Expanded therapeutic procedures.

RELATES TO: KRS 320.210(2) and 320.240(4), (5), and (7)

STATUTORY AUTHORITY: KRS 320.210(2) and 320.240(4), (5), and (7)

NECESSITY, FUNCTION, AND CONFORMITY: KRS 320.240(4) grants the Kentucky Board of Optometric Examiners the authority to promulgate reasonable regulations and the board's administrative regulations shall include the classification and licensure of optometrists by examination and credentials. KRS 320.240(5) requires a therapeutically licensed optometrist to meet educational and competence criteria set forth by the board in order to perform expanded therapeutic procedures, and evidence of proof of continuing competency shall be determined by the board. This administrative regulation establishes the educational and competence criteria necessary for a therapeutically licensed optometrist to perform expanded therapeutic procedures.

Section 1. Qualifications for a Kentucky Licensed Optometrist [~~licensed optometrists~~] to be Credentialed [~~credentialed~~] to Utilize Expanded Therapeutic Procedures. [~~utilize expanded therapeutic procedures.~~] A Kentucky licensed optometrist shall be credentialed to perform expanded therapeutic procedures if:

(1) The applicant provides proof that the applicant: [~~A Kentucky licensed optometrist shall not be credentialed to perform expanded therapeutic procedures unless:~~

(a) Holds an active license in good standing by another state; [~~The optometrist provides proof that the optometrist holds an active license in good standing by another state and is also credentialed by that state to perform expanded therapeutic procedures; or~~]

(b) Is also credentialed by that state to perform expanded therapeutic procedures; and [~~The optometrist is currently therapeutically certified in Kentucky and shall:~~]

(c) The requirements in the state of licensure for performing expanded therapeutic procedures meet or exceed the requirements in this section; or

(2)(a) The optometrist is currently therapeutically licensed in Kentucky; and

(b) [~~1~~]. Provides proof of completion of a course approved by the Board that includes: [~~shall consist of~~]

1. The following didactic instruction: [~~and clinical experiences as outlined below:~~]

Class room instruction covering:

a. [~~(a)~~] Laser Physics, Hazards and Safety;
b. [~~(b)~~] Biophysics of laser;
c. [~~(c)~~] Laser application in Clinical Optometry;
d. [~~(d)~~] Laser Tissue Interactions;
e. [~~(e)~~] Laser Indications, Contraindications and Potential Complications;
f. [~~(f)~~] Gonioscopy;
g. [~~(g)~~] Laser Therapy for Open Angle Glaucoma;
h. [~~(h)~~] Laser Therapy for Angle Closure Glaucoma;
i. [~~(i)~~] Posterior Capsulotomy;
j. [~~(j)~~] Common complications: Lids, Lashes, Lacrimal;
k. [~~(k)~~] Medicolegal Aspects of Anterior Segment Procedures;
l. [~~(l)~~] Peripheral Iridotomy;
m. [~~(xiii)~~] Laser Trabeculoplasty
n. [~~(m)~~] Minor surgical procedures;
o. [~~(n)~~] Overview of surgical instruments, Asepsis and OSHA;
p. [~~(o)~~] The surgical anatomy of the Eyelids;
q. [~~(p)~~] Emergency Surgical Procedures;
r. [~~(q)~~] Chalazion Management;
s. [~~(r)~~] Epilumeninesence Microscopy;
t. [~~(s)~~] Suture techniques;
u. [~~(t)~~] Local anesthesia: techniques and complications;
v. [~~(u)~~] Anaphylaxsis and other office emergencies;
w. [~~(v)~~] Radiofrequency Surgery; **and**
x. [~~(x)~~] Post-operative Wound Care;[~~(y) Pass a written test utilizing the National Board of Examiners in Optometry format.~~]

2. Clinical or [~~/~~] Laboratory experience including:

a. [~~(a)~~] Video Tape Demonstration;
b. [~~(b)~~] In Vitro Observation or [~~/~~] participation;
c. [~~(c)~~] In Vivo Observation; and
d. [~~(d)~~] A formal Clinical or [~~/~~] Laboratory Practical Examination; and [~~.~~]

3. Passage of a written test utilizing the National Board of Examiners in Optometry format.

(3) A board approved course shall be:

(a) Provided by an accredited optometry or medical school;

(b) Taught by full-time or adjunct faculty members of an accredited optometry or medical school;

(c) A minimum of thirty-two (32) clock hours in length; and

(d) Sponsored by an organization that meets the standards of 201 KAR 5:030.[~~(2) Prior to an optometrist being credentialed to perform an anterior segment laser procedure permitted under KRS 320, qualifications as stated in Section 1(1)(a) or (b) must be met. After observation of anterior segment laser procedures by the optometrist, the following documentation is required to be submitted to the Board:~~

~~(a) The anterior segment laser procedure shall be performed by the optometrist in the presence of a Board approved qualified preceptor;~~

~~(b) The optometrist shall demonstrate clinical proficiency in the performance of the procedure to the satisfaction of the Board approved qualified preceptor; and~~

~~(c) The Board approved qualified preceptor shall document in writing the preceptor's observations of the optometrist's performance and state that the optometrist has satisfactorily demonstrated his knowledge and qualifications in the performance of the procedure.~~

~~(3) Board approved courses must be provided in conjunction with an accredited optometry or medical school and the sponsor must meet the standards of 201 KAR 5:030. The content of the course may be updated as necessary as determined by the Board.~~

~~(4) It shall be the position of the Board that performing expanded therapeutic procedures without credentialing based upon the education requirements outlined in this administrative regulation Section (1) shall be grounds for discipline under the requirements of the KRS 320.310(1).~~

~~(5) Injections into the posterior segment/chamber or retinal tissue to treat any macular or retinal disease are not allowed under KRS 320.210(2)(b)16.~~

~~(6) Any eyelid or adnexal lesion found to be malignant shall be referred to a practitioner trained and qualified to treat such lesions.~~]

Section 2. Qualifications for a New Applicant for Licensure [~~initial optometric licensees~~] to be Credentialed [~~credentialed~~] to Utilize Expanded Therapeutic Procedures. [~~utilize expanded therapeutic procedures.~~] A new applicant for licensure as an optometrist shall [~~An initial Kentucky license holder shall not~~] be credentialed to perform expanded therapeutic procedures if: [~~unless~~`]

(1) The applicant provides proof that the applicant has graduated from an optometry school whose program includes all of [~~that demonstrates that the applicant has received~~] the education, training, and testing requirements established [~~and training equivalent to that set out~~] in Section 1; or [~~of this administrative regulation, above and~~]

(2) By the end of the first licensure renewal period, the licensee shall provide proof of compliance with Section 1 of this administrative regulation. [~~The applicant demonstrates proficiency in testing required by the Board, or~~

~~(3) By first licensure renewal, licensee must provide proof of compliance with Section 1 of this administrative regulation.~~]

Section 3. Qualifications for an Applicant [~~applicants~~] for Licensure by Endorsement[~~licensure by endorsement~~] to be Cre-

dentialed[~~credentialed~~] to Utilize Expanded Therapeutic Procedures. [~~utilize expanded therapeutic procedures.~~] An applicant for licensure by endorsement shall [~~not~~] be credentialed to perform expanded therapeutic procedures in Kentucky if: [~~unless:~~]

(1) The applicant provides proof that:

(a) The [the] applicant holds an active license in good standing by another state;

(b) Is [~~and is also~~] credentialed by that state to perform expanded therapeutic procedures; and [~~or~~]

(c) The requirements in the state of licensure for performing expanded therapeutic procedures meet or exceed the requirements in Section 1; or

(2) By the end of the first licensure renewal period, the licensee shall [~~must~~] provide proof of compliance with Section 1 of this administrative regulation.

Section 4. Qualifications for an Optometrist to be Credentialed to Utilize Expanded Therapeutic Laser Procedures. (1) An optometrist credentialed in Kentucky to perform expanded therapeutic procedures shall be credentialed to perform expanded therapeutic laser procedures if the optometrist:

(a) Provides documentation to the board from a board approved preceptor indicating that the optometrist has:

1. Performed the anterior segment laser procedure in the presence of the board approved qualified preceptor; and

2. Demonstrated clinical proficiency in the performance of the procedure on a living human eye to the satisfaction of the board approved qualified preceptor.

(2) The board approved qualified preceptor shall document in writing the preceptor's observations of the optometrist's performance and state that the optometrist has satisfactorily demonstrated his knowledge and qualifications in the performance of the procedure.

(3) A board approved qualified preceptor shall be:

(a) A licensed optometrist or ophthalmologist whose license is in good standing;

(b) A full-time or adjunct faculty member of an accredited optometry or medical school; and

(c) Credentialed in the expanded therapeutic procedure or expanded therapeutic laser procedure that the preceptor is teaching. [~~Annual course of study.~~

~~(1) In addition to the continuing education credit hours required by 201 KAR 5:030 Section 1(1) and (2)(a) and (b), an optometrist who is credentialed by the Board to perform expanded therapeutic procedures shall attend a minimum of five (5) additional contact credit hours in expanded therapeutic procedures, for a total of twenty (20) continuing education credits.~~

~~(2) None of the five (5) required contact credit hours in expanded therapeutic procedures may be obtained through the internet.~~]

Section 5. Prohibitions and Referrals. (1) Performing expanded therapeutic procedures without credentialing based upon the education requirements outlined in this administrative regulation shall be grounds for discipline pursuant to the requirements of KRS 320.310(1).

(2) Injections into the posterior segment/chamber or retinal tissue to treat any macular or retinal disease shall not be permitted under KRS 320.210(2)(b)16.

(3) Any eyelid or adnexal lesion found to be malignant shall be referred to a practitioner trained and qualified to treat those lesions.

Section 6. Annual Course of Study. (1) In addition to the continuing education credit hours required by 201 KAR 5:030 Section 1(1) and (2)(a) and (b), an optometrist who is credentialed by the Board to perform expanded therapeutic procedures shall attend a minimum of five (5) additional credit hours in expanded therapeutic procedures, for a total of twenty (20) continuing education credits.

(2) None of the five (5) required contact credit hours in expanded therapeutic procedures may be obtained through the internet.

Section 7. Incorporation by Reference. (1) The following material is incorporated by reference:

(a) "Application for Expanded Therapeutic Procedures Course", August 2011;

(b) "Application for Kentucky Licensed Optometrist to be Credentialed to Utilize Expanded Therapeutic Procedures", August 2011;

(c) "Application for New Applicant to be Credentialed to Utilize Expanded Therapeutic Procedures", August 2011;

(d) "Application for Endorsement to be Credentialed to Utilize Expanded Therapeutic Procedures", August 2011;

(e) "Preceptor Approval Form", August 2011;

(f) "Preceptor Evaluation of Expanded Therapeutic Laser Procedure", August 2011; and

(g) "Application to Utilize Expanded Therapeutic Laser Procedure(s)", August 2011.

(2) This material may be inspected, copied, or obtained, subject to applicable copyright law, at the Kentucky Board of Optometric Examiners, 163 W. Short St., Suite 550, Lexington, Kentucky 40507, telephone (859) 246-2744, Monday through Friday, 8:00 a.m. to 4:30 p.m.

JERALD COMBS, President

APPROVED BY AGENCY: August 15, 2011

FILED WITH LRC: August 15, 2011 at 11 a.m.

CONTACT PERSON: Connie Calvert, Executive Director, Kentucky Board of Optometric Examiners, 163 W. Short St., Suite 550, Lexington, Kentucky 40507, phone (859) 246-2744, fax (859) 246-2746.

EMERGENCY ADMINISTRATIVE REGULATIONS FILED AS OF NOON, OCTOBER 15, 2011

STATEMENT OF EMERGENCY
301 KAR 2:221E

This emergency administrative regulation establishes season dates, limits, shooting hours, and other requirements for hunting waterfowl. Waterfowl hunting season frameworks are set annually by the U.S. Fish and Wildlife Service. Under federal law, states that wish to establish migratory bird hunting seasons shall do so within the federal frameworks. Development of the federal regulations involves consideration of harvest and population status data, coordination with state wildlife agencies, and public involvement. Consequently, federal migratory bird hunting administrative regulations are promulgated less than six (6) weeks before the opening dates of the hunting season in Kentucky. An ordinary administrative regulation will not suffice because the federal framework is not established until days before the start of the waterfowl season. This emergency administrative regulation shall be replaced by an identical ordinary administrative regulation. The ordinary administrative regulation will be filed with the Regulations Compiler by September 30, 2011.

BENJY KINMAN, Deputy Commissioner,
For DR. JONATHAN GASSETT, Commissioner
STEVEN L. BESHEAR, Governor

TOURISM, ARTS AND HERITAGE CABINET
Kentucky Department of Fish and Wildlife Resources
(Emergency Amendment)

301 KAR 2:221E. Waterfowl seasons and limits.

RELATES TO: KRS 150.010(40), 150.025(1), 150.305(1), 150.330, 150.340(1), (3), 150.990
STATUTORY AUTHORITY: KRS 150.025(1), 150.360, 150.600(1), 50 C.F.R. 20, 21
EFFECTIVE: September 20, 2011
NECESSITY, FUNCTION, AND CONFORMITY: KRS 150.025(1) authorizes the department to promulgate administrative regulations to establish open seasons for the taking of wildlife and to regulate bag limits. KRS 150.360 authorizes the department to restrict methods of taking wildlife. KRS 150.600 authorizes the department to regulate the taking of waterfowl on public and private land. This administrative regulation establishes procedures for the taking of waterfowl within reasonable limits and within the frameworks established by 50 C.F.R. Parts 20 and 21.

Section 1. Definitions. (1) "Dark goose" means a Canada goose, white-fronted goose, or brant.
(2) "Light Goose" means a snow goose or Ross's goose.
(3) "Light Goose Conservation Order" is defined by 50 C.F.R. 21.60
(4) "Waterfowl" is defined in KRS 150.010(40).

Section 2. (1) Except as authorized by 301 KAR 2:222, 2:225, or 2:226, a person shall not hunt waterfowl except during the seasons established in this administrative regulation.
(2) Hunting zones, special hunt areas and reporting areas are established in 301 KAR 2:224.

Section 3. Season dates. (1) Duck, coot, and merganser:
(a) Beginning on Thanksgiving Day for four (4) consecutive days; and
(b) For fifty-six (56) consecutive days ending on the last Sunday in January of the following year.
(2) Canada goose:
(a) Eastern, Pennyrile, and Western Goose Zones, beginning on November 23 for seventy (70) consecutive days.
(b) Northeast Goose Zone;
1. Beginning on January 1 for 31 consecutive days. [~~the last Saturday in December for nine (9) consecutive days; and~~
~~2. January 19 through January 31.~~]
(3) White-fronted and brant geese, beginning on November 23 for seventy (70) consecutive days.
(4) Light goose:
(a) Beginning on November 23 for seventy (70) consecutive days; and
(b) Light Goose Conservation Order season:
1. Western Duck Zone: from February 1 through March 31, except:
a. The season shall be closed during the first full weekend [~~week~~] in February; and
b. Youth hunters may hunt during the first full weekend in February pursuant to 301 KAR 2:226.
2. Eastern Duck Zone from February 1 through March 31.
(5) A person shall not hunt a light or dark goose in:
(a) The areas of Laurel River Lake as posted by sign; or
(b) Cave Run Lake and the public land inside the boundary formed by Highways 801, 1274, 36, 211, US 60, and Highway 826.

Section 4. In the Ballard Reporting Area that is established in 301 KAR 2:224:
(1) A person hunting waterfowl shall:
(a) Hunt from a blind unless hunting in flooded, standing timber;
(b) Not hunt from or establish a blind:
1. Within 100 yards of another blind; or
2. Within fifty (50) yards of a property line; and
(c) Not possess more than one (1) shotgun while in a blind.
(2) The requirements of subsection (1) of this section shall not apply if the Light Goose Conservation Order, as established in 301 KAR 2:221, is the only waterfowl season open, excluding falconry seasons.

Section 5. Bag and Possession Limits. (1) Ducks: The daily limit shall be six (6), that shall not include more than:
(a) Four (4) mallards;
(b) Two (2) hen mallards;
(c) Three (3) wood ducks;
(d) One (1) black duck;
(e) Two (2) redheads;
(f) Two (2) pintails;
(g) Two (2) scaup;
(h) One (1) mottled duck; or
(i) One (1) canvasback.
(2) Coot: Daily limit fifteen (15).
(3) Merganser: Daily limit five (5), which shall not include more than two (2) hooded mergansers.
(4) Dark goose: Daily limit six (6), that shall not include more than:
(a) Two (2) Canada geese;
(b) Two (2) white-fronted geese; or
(c) Two (2) brants.
(5) Light goose: Daily limit twenty (20), except that there shall not be a limit during the Light Goose Conservation Order season.
(6) The possession limit shall be double the daily limit, except that there shall not be a light goose possession limit.

Section 6. Shooting Hours. A person shall not hunt waterfowl except from one-half (1/2) hour before sunrise until:
(1) 2 p.m. in the Northeast Goose Zone during a Canada goose season;
(2) Sunset in the remainder of the state, except as specified in 301 KAR 2:222; or
(3) One-half (1/2) hour after sunset if hunting light geese [~~goose~~] during the Light Goose Conservation Order season.

Section 7. Falconry Waterfowl Season and Limits. (1) Season dates:
(a) Light goose: November 5 through January 31;
(b) Light Goose Conservation Order season:
1. Western Duck Zone: from February 1 through March 31, except:
a. The season shall be closed during the first full weekend in February; and

b. Youth hunters may hunt during the first full weekend in February pursuant to 301 KAR 2:226.

2. Remainder of state: from February 1 through March 31; and

(c) Other waterfowl: November 5 through January 31.

(2) Daily limit: three (3) waterfowl, except that there shall not be a limit on light goose during the Light Goose Conservation Order season.

(3) Possession limit: six (6) waterfowl, except that there shall not be a possession limit on light goose during the Light Goose Conservation Order season.

Section 8. Permit for the Light Goose Conservation Order season. (1) A person hunting light goose during the Light Goose Conservation Order season shall first obtain a free permit by completing the online application process on the department's Web site at fw.ky.gov. [~~from the department by contacting the Ballard WMA office.~~]

(2) A person hunting light goose during the Light Goose Conservation Order season shall submit a Light Goose Conservation Order report to the department by April 10.

BENJY KINMAN, Deputy Commissioner, for
For DR. JONATHAN GASSETT, Commissioner
MARCHETA SPARROW, Secretary

APPROVED BY AGENCY: August 19, 2011.

FILED WITH LRC: September 20, 2011 at 4 p.m.

CONTACT PERSON: Rose Mack, Department of Fish and Wildlife Resources, Arnold L. Mitchell Building, #1 Sportsman's Lane, Frankfort, Kentucky 40601, phone (502) 564-3400, fax (502) 564-9136.

REGULATORY IMPACT ANALYSIS AND TIERING STATEMENT

(1) Provide a brief summary of:

(a) What the administrative regulation does: This administrative regulation establishes waterfowl seasons and bag limits within federal migratory bird hunting frameworks established in 50 C.F.R. Parts 20 and 21 according to the U.S. Fish and Wildlife Service (USFWS).

(b) The necessity of the administrative regulation: The necessity of this administrative regulation is to establish the 2011–12 waterfowl hunting seasons in accordance with the USFWS.

(c) How does this administrative regulation conform to the authorizing statute: KRS 150.025 authorizes the department to establish hunting season dates and bag limits. KRS 150.360 authorizes the department to restrict methods for the taking of wildlife. KRS 150.600 authorizes the department to regulate the taking of waterfowl on public and private land.

(d) How will this administrative regulation assist in the effective administration of the statutes: This administrative regulation manages waterfowl populations and hunting opportunity consistent with national and international management goals.

(2) If this is an amendment to an existing administrative regulation, provide a brief summary of:

(a) How the amendment will change the existing administrative regulation: This amendment will add 8 additional days in 2012 to the Canada goose season in the Northeast Goose Zone. Recent banding data indicates the population is stable to increasing and can now support increased harvest opportunity.

(b) The necessity of the amendment to this administrative regulation: Waterfowl seasons and limits are set on an annual basis following the establishment of federal frameworks by the U.S. Fish and Wildlife Service each summer. It is the Department's responsibility to allow quality hunting opportunity within these federal frameworks.

(c) How does the amendment conform to the authorizing statutes: See (1)(c) above.

(d) How the amendment will assist in the effective administration of the statutes: See (1)(d) above.

(3) List the type and number of individuals, businesses, organizations or state and local governments that will be affected: There are approximately 20,000 waterfowl hunters in Kentucky that may be affected by this administrative regulation.

(4) Provide an analysis of how the entities identified in question (3) will be impacted by either the implementation of this administrative regulation, if new, or by the change, if it is an amendment, including:

(a) List the actions that each of the regulated entities identified in question (3) will have to take to comply with this administrative regulation or amendment: The current changes in season dates and/or bag limits will be published in the fall waterfowl hunting guide and on the department's website. Hunters will need to follow all applicable amendments to the hunting seasons.

(b) In complying with this administrative regulation or amendment, how much will it cost each of the entities identified in question (3): There will be no additional costs to those identified in question (3).

(c) As a result of compliance, what benefits will accrue to the entities identified in question (3): There will be an increased opportunity to hunt waterfowl in the state.

(5) Provide an estimate of how much it will cost to implement this administrative regulation:

(a) Initially: This administrative regulation change will result in no initial change in cost to the Kentucky Department of Fish and Wildlife Resources to administer.

(b) On a continuing basis: There will be no additional cost on a continuing basis.

(6) What is the source of funding to be used for implementation and enforcement of this administrative regulation? The source of funding is the State Game and Fish fund.

(7) Provide an assessment of whether an increase in fees or funding will be necessary to implement this administrative regulation, if new, or by the change if it is an amendment. It will not be necessary to increase any other fees or funding to implement this administrative regulation.

(8) State whether or not this administrative regulation establishes any fees directly or indirectly increases any fees: No new fees will be established.

(9) TIERING: Is tiering applied? Tiering was not applied. The same guidelines and limits apply to all waterfowl hunters.

FISCAL NOTE ON STATE OR LOCAL GOVERNMENT

1. Does this administrative regulation relate to any program, service, or requirements of a state or local government (including cities, counties, fire departments, or school districts)? Yes

2. What units, parts or divisions of state or local government (including cities, counties, fire departments, or school districts) will be impacted by this administrative regulation? The Kentucky Department of Fish and Wildlife Resources Divisions of Wildlife and Law Enforcement will be impacted by this administrative regulation.

3. Identify each state or federal statute or federal regulation that requires or authorizes the action taken by the administrative regulation. KRS 150.025(1) authorizes the department to promulgate administrative regulations to establish open seasons for the taking of wildlife. KRS 150.360(1) authorizes the department to promulgate administrative regulations to restrict the methods for the taking of wildlife. KRS 150.600 authorizes the department to regulate the taking of waterfowl on public and private land. States must adhere to 50 C.F.R. Parts 20 and 21 that establishes the U.S. Fish and Wildlife Service's Federal migratory bird hunting frameworks.

4. Estimate the effect of this administrative regulation on the expenditures and revenues of a state or local government agency (including cities, counties, fire departments, or school districts) for the first full year the administrative regulation is to be in effect.

(a) How much revenue will this administrative regulation generate for the state or local government (including cities, counties, fire departments, or school districts) for the first year? No new revenue will be generated by this administrative regulation during the first year.

(b) How much revenue will this administrative regulation generate for the state or local government (including cities, counties, fire departments, or school districts) for subsequent years? No new revenue will be generated by this administrative regulation during subsequent years.

(c) How much will it cost to administer this program for the first year? There will be no additional costs incurred for the first year.

(d) How much will it cost to administer this program for subsequent years? There will be no additional costs incurred in subsequent years.

Note: If specific dollar estimates cannot be determined, provide a brief narrative to explain the fiscal impact of the administrative regulation.

Revenues (+/-):

Expenditures (+/-):

Other Explanation:

FEDERAL MANDATE ANALYSIS COMPARISON

1. Federal statute or regulation constituting the federal mandate. Wildlife and Fisheries, Federal Code of Regulations, 50 C.F.R. Part 20, Migratory Bird Hunting; Part 21, Migratory Bird Permits.

2. State compliance standards. The Department of Fish and Wildlife Resources sets migratory birds seasons within the frameworks established by the U.S. Fish and Wildlife Service and published in 50 C.F.R. Part 20, 21.

3. Minimum or uniform standards contained in the federal mandate. 50 C.F.R. Part 20 contains season frameworks for the earliest opening and latest closing date, the maximum number of days a species is open to hunting, and daily bag and possession limits. 50 C.F.R. Part 21 defines permits and the necessary requirements to hold and possess migratory game birds before, during and after periods open for hunting.

4. Will this administrative regulation impose stricter requirements, or additional or different responsibilities or requirements, than those required by the federal mandate? Yes.

5. Justification for the imposition of the stricter standard, or additional or different responsibilities or requirements. The federal mandate defines the regulatory frameworks that a state may allow. States are permitted to be more restrictive but not more liberal in their respective regulations. State management objectives necessitate more restrictive regulations to protect local, regional and/or state populations of birds important to Kentucky's waterfowl hunters. The season on snow geese is shorter than the federal framework because migration patterns for this species result in a paucity of birds early in the federal framework. The Canada goose season in the Northeast Goose Zone is shorter than is permitted in the rest of the state because of the desire to maintain a huntable population in that region of the state.

STATEMENT OF EMERGENCY
301 KAR 2:222E

This emergency administrative regulation establishes season dates, limits, shooting hours and other requirements for hunting waterfowl on public lands. Waterfowl hunting season frameworks are set annually by the U.S. Fish and Wildlife Service. Under federal law, states that wish to establish migratory bird hunting seasons shall do so within the federal frameworks. Development of the federal administrative regulations involves consideration of harvest and population status data, coordination with state wildlife agencies, and public involvement. Consequently, federal migratory bird hunting administrative regulations are promulgated less than six (6) weeks before the opening dates of the hunting season in Kentucky. An ordinary administrative regulation will not suffice because the federal framework is not established until days before the start of the waterfowl season. This emergency administrative regulation shall be replaced by an identical ordinary administrative regulation. The ordinary administrative regulation will be filed with the Regulations Compiler by September 30, 2011.

BENJY KINMAN, Deputy Commissioner,
For DR. JONATHAN GASSETT, Commissioner
STEVEN L. BESHEAR, Governor

TOURISM, ARTS AND HERITAGE CABINET
Kentucky Department of Fish and Wildlife Resources
(Emergency Amendment)

301 KAR 2:222E. Waterfowl hunting requirements on public lands.

RELATES TO: KRS 150.010(40), 150.305(1), 150.330, 150.340(1), (3), 150.990

STATUTORY AUTHORITY: KRS 150.025(1), 150.360, 150.600(1), 50 C.F.R. 20, 21

EFFECTIVE DATE: September 20, 2011

NECESSITY, FUNCTION, AND CONFORMITY: KRS 150.025(1) authorizes the department to promulgate administrative regulations to establish open seasons for the taking of wildlife and to regulate bag limits. KRS 150.360 authorizes the department to restrict methods of taking wildlife. KRS 150.600(1) authorizes the department to regulate the taking of waterfowl on public and private land. This administrative regulation establishes procedures for the taking of waterfowl within reasonable limits and within the frameworks established by 50 C.F.R. Parts 20 and 21.

Section 1. Definitions. (1) "Blind" means a:

(a) Concealed enclosure;

(b) Pit; or

(c) Boat.

(2) "Department blind" means a permanently fixed blind structure built by the department.

(3) "Hunt site" means a specific location where waterfowl hunting is allowed, as approved by the department or the U.S. Army Corps of Engineers.

(4) "Layout blind" means a portable blind that when fully deployed allows one (1) person to be concealed above the surface of the ground.

(5) "Party" means:

(a) A person hunting alone; or

(b) Two (2) to four (4) people who share a department blind or hunt site.

(6) "Permanent blind" means a blind left in place by a waterfowl hunter longer than twenty-four (24) hours.

(7) "Regular waterfowl season" means the open waterfowl season that does not include the Light Goose Conservation Order or the September wood duck, teal, and Canada goose seasons as established in 301 KAR 2:221 and 2:225.

(8) "Waterfowl" is defined in KRS 150.010(40).

(9) "Wildlife Management Area" or "WMA" means a tract of land:

(a) Controlled by the department through ownership, lease, license, or cooperative agreement; and

(b) that has "Wildlife Management Area" or "WMA" as part of its official name.

Section 2. Shot requirements. A person hunting waterfowl shall not use or possess a shotgun shell:

(1) Longer than three and one-half (3 1/2) inches; or

(2) Containing:

(a) Lead shot;

(b) Shot not approved by the U.S. Fish and Wildlife Service for waterfowl hunting; or

(c) Shot larger than size "T".

Section 3. (1) Except as specified in this section or in Section 4 of this administrative regulation, on a Wildlife Management Area:

(a) A person hunting waterfowl shall not;

1. Establish or hunt from a permanent waterfowl blind;

2. Hunt within 200 yards of:

a. Another occupied hunt site;

b. Another legal waterfowl hunting party; or

c. An area closed to waterfowl hunting;

(b) A person shall not hunt in a designated recreation area or access point;

(c) More than four (4) persons shall not occupy a waterfowl blind or hunt site; and

(d) A hunter shall remove decoys and personal items daily,

except that a hunter drawn for a multiday hunt may choose to leave decoys in place for the duration of the hunt.

(2) A person wanting to establish or use a permanent waterfowl blind or hunt site on Lake Barkley, Barren River Lake, Buckhorn Lake, Green River Lake, Nolin River Lake, Paintsville Lake, Rough River Lake, Sloughs, or Doug Travis Wildlife Management Areas:

(a) Shall first obtain a waterfowl blind permit from the U.S. Army Corps of Engineers or the department;

(b) May designate one (1) other person as a partner; and

(c) Shall not hold more than one (1) permit per area.

(3) A person who participates in a drawing for a hunt site permit shall:

(a) Be at least eighteen (18) years of age; and

(b) Possess:

1. A valid Kentucky hunting license;

2. A Kentucky waterfowl permit; and

3. A federal duck stamp.

(4) The holder of a hunt site permit shall:

(a) Construct or establish the blind or hunt site before November 20 or forfeit the permit;

(b) Not lock a waterfowl blind; and

(c) Remove the blind and blind materials within thirty (30) days after the close of the regular waterfowl season or be ineligible for a permit the following year, unless an extension of time is granted by the department based on weather or water level conflicts.

(5) A permanent blind, department blind, or blind site not occupied by the permit holder one (1) hour before sunrise shall be available to another hunter on a first-come, first-served basis.

(6) A waterfowl blind restriction established in this section shall not apply to a falconer if a gun or archery season is not open.

Section 4. Wildlife Management Area Requirements. (1) The regular waterfowl season provisions shall apply, as established in 301 KAR 2:221, except as established in this section.

(2) The provisions of this section shall not apply to a waterfowl hunting season that opens prior to October 15, as established in 301 KAR 2:225.

(3) A person shall not:

(a) Hunt on an area marked by a sign as closed to hunting;

(b) Enter an area marked by signs as closed to public access; or

(c) Hunt a species on an area marked by signs as closed to hunting for that species.

(4) On Wildlife Management Areas in Ballard County:

(a) The shotgun shell possession limit shall be fifteen (15), except that the shotgun shell possession limit shall be twenty-five (25) if:

1. The daily bag limit for ducks is greater than three (3); and

2. The daily bag limit for Canada goose is greater than or equal to two (2);

(b) At least one (1) person in a waterfowl blind shall be eighteen (18) years of age or older if hunting in a department waterfowl blind or hunt site at Ballard or Boatwright WMA.

(5) At Ballard WMA:

(a) The duck, coot, and merganser season shall be December 7 through January 29. [~~30.~~]

(b) The goose season shall be December 7 through January 29. [~~30.~~]

(c) Youth waterfowl season shall be the first full weekend in February.

(d) A person hunting waterfowl shall not hunt on Monday, Tuesday, Christmas Day, or New Year's Day.

(e) A person hunting waterfowl shall:

1. Apply for the waterfowl quota hunt as established in Section 6 of this administrative regulation;

2. Not hunt waterfowl on the Ohio River from fifty (50) yards upstream of Dam 53 to fifty (50) yards downstream from the southern border of Ballard Wildlife Management Area from October 15 through March 15; and

3. Exit the area by 2 p.m. during the regular waterfowl season, except as authorized by the department.

(6) At Boatwright WMA, including the Olmsted, Peal, and Swan Lake units:

(a) A party shall:

1. Not hunt on Monday, Tuesday, Christmas Day, or New Year's Day;

2. Obtain a daily check-in card by 8 a.m. before entering the area from December 7 through January 29. [~~8 through January 30.~~]

3. Check out the same day by:

a. Visiting the designated Check station prior to 8 a.m.; or

b. Depositing the check-in card at a department-designated drop point after 8 a.m.

(b) Duck season shall be open one-half (1/2) hour before sunrise to sunset beginning Thanksgiving Day for four (4) consecutive days on areas of Boatwright WMA that are open to hunting.

(c) A department blind or hunt site shall be assigned through a daily drawing through January 30.

(d) A department blind or hunt site shall be offered to another hunter on a first-come, first-served basis, if the blind or hunt site has not been assigned during the daily drawing.

(e) Waterfowl hunters shall exit the area by 2 p.m. during the regular waterfowl season.

(f) A boat blind shall not be permitted in flooded timber, except:

1. During periods of flood if no other access is possible; or

2. A mobility-impaired hunter may hunt from a boat.

(g) A party shall only hunt waterfowl:

1. From a department blind; or

2. From layout blinds set so that all layout blinds in the party lie within a twenty-five (25) foot radius from the center of the party, and within 200 yards of a hunt site in December and January during the regular waterfowl season.

(h) On the Peal unit:

1. More than seven (7) parties shall not hunt at the same time on Buck Lake or Flat Lake;

2. More than four (4) parties shall not hunt at the same time on Fish Lake;

3. More than three (3) parties shall not hunt at the same time on First Lake or Second Lake;

4. A party shall not hunt waterfowl except within twenty-five (25) feet of a hunt site during December and January.

(i) On the Swan Lake Unit:

1. A person shall not hunt waterfowl from November 25 through December 5;

2. The area open to hunting during the regular waterfowl season shall be open for the Light Goose Conservation Order season as established in 301 KAR 2:221; and

3. Blind restrictions shall not apply to the Light Goose Conservation Order season.

(7) Lake Barkley WMA.

(a) A permanent blind shall only be established within ten (10) yards of a blind site;

(b) Waterfowl refuge areas:

1. The area west of the Cumberland River channel, as marked by buoys, between river mile fifty-one (51), at Hayes Landing Light, south to the Tennessee Valley Authority's power transmission lines at river mile fifty-five and five-tenths (55.5) shall be closed from November 1 through February 15; and

2. The area within Honker Bay and Fulton Bay, as marked by buoys and signs, shall be closed from November 1 through March 15.

(c) A person shall not hunt from October 15 through March 15:

1. On Duck Island; or

2. Within 200 yards of Duck Island.

(8) Barren River Lake WMA. A person hunting waterfowl:

(a) May use a breech-loading shotgun along the shoreline of the Peninsula Unit; and

(b) Shall not use a breech-loading firearm elsewhere on the area.

(9) Miller Welch-Central Kentucky WMA. A person shall not hunt waterfowl from October 15 through January 14.

(10) Lake Cumberland WMA. The following sections shall be closed to the public from October 15 through March 15:

(a) The Wesley Bend area, bounded by Fishing Creek, Beech Grove Road and Fishing Creek Road; and

(b) The Yellowhole area, bounded by Fishing Creek Road and Hickory Nut Road.

(11) Pioneer Weapons WMA. A person hunting waterfowl:

(a) May use a breech-loading shotgun along the shoreline of Cave Run Lake; and

(b) Shall not use a breech-loading firearm elsewhere on the area.

(12) Doug Travis WMA.

(a) Shooting hours shall be one-half (1/2) hour before sunrise until 2 p.m.

(b) A person shall not enter a hunting area prior to 4 a.m. daily.

(c) A person hunting waterfowl shall exit the area by 2 p.m. during waterfowl season, except as authorized by the department.

(d) [~~(c)~~] On Black Lake, Fish Lake, Forked Lake, Indian Camp Lake, Number Four Lake, and Upper Goose Lake, all waterfowl hunting after November 1:

1. Shall be from hunt sites assigned by a random preseason drawing; and

2. Shall be within ten (10) yards of a hunt site, including periods of Mississippi River flooding.

(13) Grayson Lake WMA. A person shall not hunt waterfowl:

(a) Within the no-wake zone at the dam site marina;

(b) From the shore of Camp Webb;

(c) On Deer Creek Fork; and

(d) Within three-quarters (3/4) of a mile from the dam.

(14) Green River Lake WMA.

(a) Shooting hours shall be one-half (1/2) hour before sunrise until 2 p.m.

(b) A person shall not enter a hunting area prior to 4 a.m. daily.

(15) Kaler Bottoms WMA.

(a) Shooting hours shall be one-half (1/2) hour before sunrise until 2 p.m.

(b) A person shall not enter a hunting area prior to 4 a.m. daily.

(16) Land Between the Lakes National Recreation Area.

(a) The following portions shall be closed to the public from November 1 through March 15:

1. Long Creek Pond;

2. The eastern one-third (1/3) of Smith Bay, as marked by buoys; and

3. The eastern two-thirds (2/3) of Duncan Bay, as marked by buoys;

(b) The following portions shall be closed to waterfowl hunting:

1. The Environmental Education Center; and

2. Energy Lake.

(c) A person shall possess an annual Land Between the Lakes Hunting Permit if hunting waterfowl:

1. Inland from the water's edge of Kentucky Lake or Barkley Lake; or

2. From a boat on a flooded portion of Land Between the Lakes when the lake level is above elevation 359.

(d) A person shall not hunt waterfowl on inland areas during a quota deer hunt.

(e) A person shall not establish or use a permanent blind:

1. On an inland area; or

2. Along the Kentucky Lake shoreline of Land Between the Lakes.

(f) A person hunting waterfowl shall remove decoys and personal items daily.

(17) Obion Creek WMA.

(a) Shooting hours shall be one-half (1/2) hour before sunrise until 2 p.m.

(b) A person shall not enter a hunting area prior to 4 a.m. daily.

(18) Ohio River Islands WMA.

(a) A person shall not hunt from October 15 through March 15 on the Kentucky portion of the Ohio River from Smithland Lock and Dam upstream to the power line crossing at approximately river mile 911.5.

(b) Stewart Island shall be closed to public access from October 15 through March 15[~~, except for those drawn for a quota deer hunt~~].

(c) Shooting hours shall be one-half (1/2) hours before sunrise until 2 p.m.

(d) A person shall not enter a hunting area prior to 4 a.m. daily.

(19) Peabody WMA.

(a) Shooting hours shall be one-half (1/2) hour before sunrise until 2 p.m.

(b) A person shall not enter a hunting area prior to 4 a.m. daily.

(c) The following areas, as posted by signs, shall be closed to the public from October 15 through March 15:

1. The Sinclair Mine area, bounded by Hwy 176, the haul road, and Goose Lake Road; and

2. The Ken area, bounded by Wysox Road, H2 Road, H1 Road, and H6 Road.

(20) Robinson Forest WMA. The main block of the WMA shall be closed to waterfowl hunting.

(21) Sloughs WMA.

(a) Shooting hours shall be one-half (1/2) hour before sunrise until 2 p.m.

(b) A person shall not enter a hunting area prior to 4 a.m. daily.

(c) [~~(b)~~] A person hunting waterfowl shall exit the area by 2 p.m. during the regular waterfowl season.

(d) [~~(c)~~] On the Grassy-Pond Powell's Lake Unit, a person hunting waterfowl:

1. Shall hunt:

a. From a department blind; or

b. From a blind within twenty-five (25) yards of a blind site.

2. Shall remove decoys and personal items from the area on a daily basis.

(e) On the Jenny Hole-Highlands Creek Unit, a person hunting waterfowl

1. Shall hunt:

a. From a department blind;

b. Within twenty-five (25) yards of a hunt site; or

c. No closer than 200 yards of another hunting party.

2. Shall remove decoys and personal items from the area on a daily basis.

(f) If the Ohio River reaches a level that requires boat access, a waterfowl hunter:

1. May hunt from a boat without regard to department blinds; and

2. Shall not hunt closer than 200 yards from another boat.

(g) A person hunting waterfowl on the Crenshaw and Duncan Tracts of the Sauerheber Unit:

1. Shall hunt from a blind assigned by the department through a drawing as established in Section 6 of this administrative regulation;

2. May occupy a permitted blind if not claimed by the permittee within one (1) hour before sunrise;

3. Shall not possess more than fifteen (15) shotgun shells, except that the shotgun shell possession limit shall be twenty-five (25) if:

(a) The daily bag limit for ducks is greater than three (3); and

(b) The daily bag limit for Canada goose is greater than or equal to two (2);

4. Shall be accompanied by an adult if under eighteen (18) years of age; and

5. The waterfowl blind for a mobility-impaired person shall be open to the public if the permit holder or another mobility-impaired person has not claimed the blind on that day by one (1) hour before sunrise.

(h) The Crenshaw and Duncan II tracts of the Sauerheber Unit shall be closed to hunting except for:

1. Waterfowl from November 1 through March 15; and

2. The modern gun deer season.

(i) The remainder of the Sauerheber Unit shall be closed to the public from November 1 through March 15.

(22) South Shore WMA.

(a) The WMA shall be closed to hunting from November 15 through January 15, except for quota waterfowl hunting and dove hunting.

(b) A hunter shall use a department blind.

(c) A department blind shall be allocated by a preseason drawing.

(23) Taylorsville Lake WMA.

(a) Shooting hours shall be one-half (1/2) hour before sunrise until 2 p.m.

(b) A person shall not enter a hunting area prior to 4 a.m. daily.

(24) Yatesville Lake WMA. The following areas shall be closed to waterfowl hunting, unless authorized by Yatesville Lake State Park:

(a) The Greenbrier Creek embayment; and

(b) The lake area north from the mouth of the Greenbrier Creek embayment to the dam, including the island.

(25) Yellowbank WMA. The area designated by a sign and painted boundary marker shall be closed to the public from October 15 through March 15.

Section 5. (1) A person applying to hunt waterfowl on Ballard WMA or the Sauerheber Unit of Sloughs WMA shall:

(a) Apply through the vendor supplied by the department by calling 1-877-598-2401, or by completing the online application process on the department's website at fw.ky.gov.

(b) Apply from September 1 through September 30;

(c) Pay a three (3) dollar application fee for each application; and

(d) Not apply more than one (1) time for each hunt.

(2) A person drawn to hunt may bring up to three (3) additional hunters.

(3) A person shall be declared ineligible to hunt in department waterfowl quota hunts during the remaining portion of the waterfowl season and declared ineligible to apply for any department quota hunt the following year if the hunter violates state or federal regulations while waterfowl hunting on WMAs that have a preseason or daily drawing.

Section 6. State Parks. (1) Waterfowl hunting shall be prohibited, except there shall be an open waterfowl hunt December 13 through January 31 on designated areas of Barren River, Grayson Lake, Greenbo Lake, Lake Barkley, Lincoln Homestead, Nolin Lake, Paintsville Lake, Pennyrile Lake, Rough River Lake, and Yatesville Lake State Parks.

(2) Hunters shall check in each day at the front desk of the state park or a designated check-in location on days that the park office is not open.

(3) During check-in hunters shall be provided a map showing designated areas of the park that are open to waterfowl hunting.

(4) Hunters shall check out each day at the front desk of the state park or a designated check-out location on days that the park office is not open.

(5) Statewide waterfowl hunting requirements shall apply.

Section 7. Youth-Mentor and Mobility-Impaired Waterfowl Hunts. (1) There shall be youth-mentor waterfowl hunts on the Minor Clark and Peter W. Pfeiffer fish hatcheries each Saturday and Sunday in January.[~~:~~

~~(a) The last Sunday in December;~~

~~(b) The first Saturday in January;~~

~~(c) The first Sunday in January;~~

~~(d) The fourth Saturday in January;~~

~~(e) The fourth Sunday in January;~~

~~(f) The fifth Saturday in January; and~~

~~(g) The fifth Sunday in January.~~]

(2) There shall be a mobility-impaired waterfowl hunt at Minor Clark Fish Hatchery that is held concurrently with each youth-mentor hunt.

(3) A youth or mobility-impaired person shall register in advance and carry a department provided postcard notification on the day of the hunt.

(4) A mobility-impaired person shall also submit a mobility-impaired access permit.

(5) Each youth shall be accompanied by an adult who is eighteen (18) years or older.

(6) Each youth shall not be accompanied by more than one (1) adult.

(7) One (1) adult may accompany two (2) youths.

(8) A mobility-impaired hunter may be accompanied by no more than one (1) assistant who may also hunt.

(9) A person shall hunt from an established blind and shall not change blinds.

(10) A blind shall not be used by more than four (4) hunters.

(11) A person shall only discharge a firearm from a blind.

(12) A person shall not possess more than fifteen (15) shotshells.

(13) A waterfowl hunter, mentor, or assistant shall immediately retrieve downed birds.

(14) A person shall encase a firearm if traveling to and from a blind.

(15) Hunting shall end at noon, and hunters shall exit the area by 1 p.m.

(16) All decoys and equipment shall be removed at the end of each day's hunt.

(17) A hunter shall report harvest by depositing a completed hunt permit at the designated location.

BENJY KINMAN, Deputy Commissioner,
For DR. JONATHAN GASSETT, Commissioner
MARCHETA SPARROW, Secretary

APPROVED BY AGENCY: August 19, 2011

FILED WITH LRC: September 20, 2011 at 4 p.m.

CONTACT PERSON: Rose Mack, Department of Fish and Wildlife Resources, Arnold L. Mitchell Building, #1 Sportsman's Lane, Frankfort, Kentucky 40601, phone (502) 564-3400, fax (502) 564-9136.

REGULATORY IMPACT ANALYSIS AND TIERING STATEMENT

Contact Person: Rose Mack

(1) Provide a brief summary of:

(a) What the administrative regulation does: This administrative regulation establishes waterfowl seasons, bag limits and requirements on public lands within federal migratory bird hunting frameworks established in 50 C.F.R. Part 20 according to the U.S. Fish and Wildlife Service (USFWS).

(b) The necessity of the administrative regulation: The necessity of this administrative regulation is to establish the 2011–2012 waterfowl hunting requirements in accordance with the USFWS and Kentucky Department of Fish and Wildlife Resources management objectives.

(c) How does this administrative regulation conform to the authorizing statute: KRS 150.025 authorizes the department to establish hunting season dates, bag limits and other hunting requirements. KRS 150.360 authorizes the department to restrict methods and hunting hours for taking wildlife. KRS 150.600 authorizes the department to regulate the taking of waterfowl on public and private land.

(d) How will this administrative regulation assist in the effective administration of the statutes: This administrative regulation manages waterfowl populations and hunting opportunity consistent with state, national and international management goals.

(2) If this is an amendment to an existing administrative regulation, provide a brief summary of:

(a) How the amendment will change the existing administrative regulation: This amendment sets a daily entry time for waterfowl hunting on high use waterfowl management areas and establishes youth mentor and mobility impaired hunts on specific fish hatcheries owned by the state.

(b) The necessity of the amendment to this administrative regulation: This amendment is necessary to provide adequate public hunting opportunity with minimal area use conflict.

(c) How does the amendment conform to the authorizing statutes: See (1)(c) above.

(d) How the amendment will assist in the effective administration of the statutes: See (1)(d) above.

(3) List the type and number of individuals, businesses, organizations or state and local governments that will be affected: There are approximately 20,000 waterfowl hunters in Kentucky that may be affected by this administrative regulation.

(4) Provide an analysis of how the entities identified in question (3) will be impacted by either the implementation of this administrative regulation, if new or by the change, if it is an amendment, including:

(a) List the actions that each of the regulated entities identified in question (3) will have to take to comply with this administrative regulation or amendment: The amendments in season dates and hunting requirements will be published in the fall waterfowl hunting guide and on the department's website. Hunters will need to follow all applicable amendments to the hunting seasons.

(b) In complying with this administrative regulation or amendment, how much will it cost each of the entities identified in ques-

tion (3): There will be no additional or amended costs to those identified in question (3).

(c) As a result of compliance, what benefits will accrue to the entities identified in question (3): There will be continued opportunity for quality waterfowl hunting on public areas.

(5) Provide an estimate of how much it will cost to implement this administrative regulation:

(a) Initially: This administrative regulation change will result in no additional cost to the Kentucky Department of Fish and Wildlife Resources to administer.

(b) On a continuing basis: There will be no additional cost on a continuing basis.

(6) What is the source of funding to be used for implementation and enforcement of this administrative regulation? The source of funding is the State Game and Fish fund.

(7) Provide an assessment of whether an increase in fees or funding will be necessary to implement this administrative regulation, if new, or by the change if it is an amendment. It will not be necessary to increase any other fees or funding to implement this administrative regulation.

(8) State whether or not this administrative regulation establishes any fees directly or indirectly increases any fees: No new fees will be established.

(9) TIERING: Is tiering applied? Tiering was not applied. The same guidelines and limits apply to all waterfowl hunters.

FISCAL NOTE ON STATE OR LOCAL GOVERNMENT

1. Does this administrative regulation relate to any program, service, or requirements of a state or local government (including cities, counties, fire departments, or school districts)? Yes

2. What units, parts or divisions of state or local government (including cities, counties, fire departments, or school districts) will be impacted by this administrative regulation? The Kentucky Department of Fish and Wildlife Resources Divisions of Wildlife and Law Enforcement will be impacted by this administrative regulation.

3. Identify each state or federal statute or federal regulation that requires or authorizes the action taken by the administrative regulation. KRS 150.025(1) authorizes the department to promulgate administrative regulations to establish open seasons for the taking of wildlife. KRS 150.360(1) authorizes the department to promulgate administrative regulations to restrict the methods for the taking of wildlife. KRS 150.600 authorizes the department to regulate the taking of waterfowl on private and public land.

4. Estimate the effect of this administrative regulation on the expenditures and revenues of a state or local government agency (including cities, counties, fire departments, or school districts) for the first full year the administrative regulation is to be in effect.

(a) How much revenue will this administrative regulation generate for the state or local government (including cities, counties, fire departments, or school districts) for the first year? No new revenue will be generated by this administrative regulation during the first year.

(b) How much revenue will this administrative regulation generate for the state or local government (including cities, counties, fire departments, or school districts) for subsequent years? No new revenue will be generated by this administrative regulation during subsequent years.

(c) How much will it cost to administer this program for the first year? There will be no additional costs incurred for the first year.

(d) How much will it cost to administer this program for subsequent years? There will be no additional costs incurred in subsequent years.

Note: If specific dollar estimates cannot be determined, provide a brief narrative to explain the fiscal impact of the administrative regulation.

Revenues (+/-):

Expenditures (+/-):

Other Explanation:

FEDERAL MANDATE ANALYSIS COMPARISON

1. Federal statute or regulation constituting the federal mandate. Wildlife and Fisheries, Federal Code of Regulations, 50 C.F.R. Part 20, Migratory Bird Hunting; Part 21, Migratory Bird Permits.

2. State compliance standards. The Department of Fish and Wildlife Resources sets migratory birds seasons within the frameworks established by the U.S. Fish and Wildlife Service and published in 50 C.F.R. Part 20, 21.

3. Minimum or uniform standards contained in the federal mandate. 50 C.F.R. Part 20 contains season frameworks for the earliest opening and latest closing date, the maximum number of days a species is open to hunting, and daily bag and possession limits. 50 C.F.R. Part 21 defines permits and the necessary requirements to hold and possess migratory game birds before, during and after periods open for hunting.

4. Will this administrative regulation impose stricter requirements, or additional or different responsibilities or requirements, than those required by the federal mandate? Yes.

5. Justification for the imposition of the stricter standard, or additional or different responsibilities or requirements. The federal mandate defines the regulatory frameworks that a state may allow. States are permitted to be more restrictive but not more liberal in their respective regulations. State management objectives necessitate more restrictive regulations to protect local, regional and/or state populations of birds important to Kentucky's waterfowl hunters. The greatest wintering and migrating waterfowl concentrations are located on public lands managed by the Department. The Department imposes more restrictive hunting regulations on these lands in effort to meet waterfowl management objectives while still providing quality hunting opportunity.

STATEMENT OF EMERGENCY
907 KAR 1:018E

This emergency administrative regulation is promulgated to alter the Medicaid program's drug reimbursement methodology by replacing the drug pricing component average wholesale price (AWP) with wholesale acquisition cost (WAC). The action is necessary as AWP will no longer be published by First Databank, Inc. after September 26, 2011. The unavailability of AWP stems in part from the resolution of a civil court case - New England Carpenters Health Benefits Fund, et al. v. First Databank, Inc. – in which First Databank, Inc., was found to have incorrectly stated the AWP of drugs compared to the actual market price for drugs. The action must be taken on an emergency basis to protect the health, safety and welfare of Medicaid recipients whose access to prescription drug coverage could be jeopardized in the absence of immediate action. This emergency administrative regulation shall be replaced by an ordinary administrative regulation filed with the Regulations Compiler. The ordinary administrative regulation is identical to this emergency administrative regulation.

STEVEN L. BESHEAR, Governor
JANIE MILLER, Secretary

FOR HEALTH AND FAMILY SERVICES
Department for Medicaid Services
Division of Administration and Financial Management
(Emergency Amendment)

907 KAR 1:018E. Reimbursement for drugs.

RELATES TO: KRS 205.560, 205.561, 205.5631, 205.5632, 205.5634, 205.5636, 205.5638, 205.5639, 205.6316(4), 217.015, 311.550, 311.560, 42 C.F.R. 440.120, 447.331, 447.332, 447.333, 42 U.S.C. 256b, 1396a-d

STATUTORY AUTHORITY: KRS 194A.030(2), 194A.050(1), 205.520(3), 205.560, 205.561(2), 205.6316(4), 42 U.S.C. 1396a(a)(30), 1396r-8[~~, 2005 Ky. Acts ch. 99~~]

EFFECTIVE DATE: October 3, 2011

NECESSITY, FUNCTION, AND CONFORMITY: [~~2005 Ky. Acts ch. 99 reorganized the Cabinet for Health Services and placed the Department for Medicaid Services and the Medicaid Program under the Cabinet for Health and Family Services.~~] The Cabinet for Health and Family Services, Department for Medicaid

Services has responsibility to administer the Medicaid Program. KRS 205.520(3) authorizes the cabinet, by administrative regulation, to comply with any requirement that may be imposed or opportunity presented by federal law to qualify for federal Medicaid funds[for the provision of medical assistance to Kentucky's indigent citizenry]. KRS 205.561(2) and 205.6316(4) require the department to promulgate an administrative regulation to establish a dispensing fee for prescriptions. This administrative regulation establishes the Medicaid program reimbursement policies for drugs dispensed to Medicaid recipients who are not enrolled with a managed care organization[method for determining reimbursement for drugs through the Medicaid Outpatient Pharmacy Program and the dispensing fees].

Section 1. Definitions. (1) "A-rated generic product" means a product that the FDA has found to be bioequivalent.

(2)["Average wholesale price" or "AWP" means the average wholesale price published in a nationally recognized comprehensive drug data file for which the department has contracted.

(3)] "Department" means the Department for Medicaid Services or its designated agent.

(3)[(4)] "Direct price" means the estimated acquisition cost for which a retailer can purchase a drug product directly from the manufacturer as listed in a nationally-recognized comprehensive drug data file for which the department has contracted.

(4)[(5)] "Dispensing fee" means a professional fee paid to reimburse a pharmacy for costs associated with the dispensing of a prescribed drug.

(5) "Federal financial participation" is defined by 42 C.F.R. 400.203.

(6) "Federal upper limit" or "FUL" means the maximum federal financial participation
available toward reimbursement for a given drug dispensed to a Medicaid recipient.

(7)[(6)] "Food and Drug Administration" or "FDA" means the Food and Drug Administration of the United States Department of Health and Human Services.

(8) "State maximum allowable cost" means the maximum amount established by the department that the department shall reimburse for a drug.

(9)[(7)] "Weighted majority of volume purchase" means a calculation used in determining a state maximum allowable cost or MAC that is based on market share.

(10)[(8)] "Wholesale acquisition cost" or "WAC" means the estimated acquisition cost for the wholesaler as listed in a nationally-recognized comprehensive drug data file for which the department has contracted.

Section 2. Reimbursement. (1) Drug copayment requirements and provisions shall be as established in 907 KAR 1:604.

(2) The department:

(a) May establish a state maximum allowable[maximum-allowable] cost for a drug:

1. If two (2) or more A-rated therapeutically-equivalent, multisource, noninnovator drugs with a significant cost difference exist for the given drug; and

2. By reviewing the pricing sources WAC[AWP, WAC,] and direct price for the drug as identified in a nationally-recognized comprehensive drug data file for which the department has contracted and utilizing the weighted majority of volume purchased. [For example, if for a given drug there are two (2) therapeutically-equivalent drugs with one (1) priced at five (5) dollars per pill and possessing thirty (30) percent of the market share and the other priced at one (1) dollar per pill and possessing seventy (70) percent of the market share, the department shall factor in the market share in determining the state MAC price rather than simply averaging the two (2) prices]; and

(b) Shall maintain a current listing of drugs and their corresponding state maximum allowable [maximum-allowable] costs via a link from the department Web site located at the following address: http://www.chfs.ky.gov/dms.

(3) An appeal of a state maximum allowable[maximum-allowable] cost price for a drug shall be as follows:

(a)[1.] The provider shall email or fax a completed Kentucky Medicaid MAC Price Research Request Form (which is available at the department's Web site which is http://www.chfs.ky.gov/dms) to Magellan Medicaid Administration in accordance with the instructions on the form.["MAC Price Inquiries and Research Request Form" (which is available at the department and at the Web site address: http://kentucky.fhsc.com/providers/documents.asp, by clicking on "MAC Price Inquires and Research Request Form or via the specific Web site address: http://kentuckyfhsc.com/Downloads/providers/KYRx_MACResearchRequestForm.pdf) to First Health Services Corporation. The email address is rebate@fhsc.com and the fax number is 804-217-7911; or

2. The provider shall contact the First Health Services Corporation technical call center at 1-800-432-7005 and provide information regarding the appeal including the national drug code for the drug in question;]

(b) An appeal of a state maximum allowable[maximum-allowable] cost price for a drug shall be investigated and resolved within three (3) business days;

(c) If available, the provider shall be supplied with the name of one (1) or more manufacturers who have a price comparable to the state maximum allowable[maximum-allowable] cost price;

(d) The state maximum allowable[maximum-allowable] cost price and effective date of that price shall be adjusted accordingly, retroactive to the date of service for the state maximum allowable[maximum-allowable] cost price prescription in question, if:

1. It is determined that no manufacturer exists in the price range referenced in paragraph (c) of this subsection; or

2. The provider is able to document that despite reasonable efforts to obtain access, he or she does not have access to the one (1) or more manufacturers supplied to the provider; and

(e) When the change in state maximum allowable[maximum-allowable] cost price for a price that is adjusted becomes effective, the provider shall be informed that the claim may be rebilled for the price adjustment.

(4) Reimbursement to a pharmacy participating in the Medicaid Program for a drug listed in the Kentucky Medicaid Outpatient Drug List established in 907 KAR 1:019 and provided to an eligible recipient shall be determined in accordance with the requirements established in this subsection.

(a) An appropriate rebate agreement shall be signed by the drug manufacturer or the drug shall be provided based on a prior authorized exemption from the rebate requirement in accordance with 907 KAR 1:019.

(b) Drug costs shall be determined in the Pharmacy Program using drug pricing and coding information obtained from a nationally-recognized comprehensive drug data file for which the department has contracted with pricing based on the actual package size utilized.

(c) Reimbursement for a drug shall be the lesser of:

1. The federal upper limit, if one (1) exists, plus a dispensing fee and, if applicable, a unit dose addition;

2. The state maximum allowable[maximum-allowable] cost, if one (1) exists, plus a dispensing fee and, if applicable, a unit dose addition;

3. The estimated acquisition cost (EAC) which shall:

a. For a generic drug, equal the WAC plus three and two-tenths(3.2)[AWP minus fourteen (14)] percent, plus a dispensing fee and, if applicable, a unit dose addition; and

b. For a brand name drug, equal the WAC plus two (2)[AWP minus fifteen (15)] percent, plus a dispensing fee and, if applicable, a unit dose addition;

4. The usual and customary billed charge.

(d) Reimbursement for the dispensing of an emergency supply of a drug shall be:

1. Made only outside normal business hours of the department's Drug Prior Authorization office and as permitted in accordance with 907 KAR 1:019, Section 4; and

2. The lesser of:

a. The federal upper limit, if one (1) exists, plus the dispensing fee for the prescription and, if applicable, a unit dose addition;

b. The state maximum allowable[maximum-allowable] cost, if one (1) exists, plus a dispensing fee and, if applicable, a unit dose addition;

c. The estimated acquisition cost (EAC), which shall:

(i) For a generic drug, equal the WAC plus three and two-tenths(3.2)[~~AWP minus fourteen (14)~~] percent, plus a dispensing fee and, if applicable, a unit dose addition; and

(ii) For a brand name drug, equal the WAC plus two (2)[~~AWP minus fifteen (15)~~] percent, plus a dispensing fee and, if applicable, a unit dose addition;

d. The usual and customary billed charge.

(e) If the dispensing of an emergency supply results in partial filling of the quantity or amount prescribed, reimbursement for the partial filling of the remainder of the prescription shall utilize the methodology specified in paragraph (c) of this subsection, except that only one (1) dispensing fee shall be allowed for the combined partial fill and subsequent completion fill.

(f) Reimbursement shall be denied if:

1. The recipient is ineligible on the date of service;

2. The drug is excluded from coverage in accordance with 907 KAR 1:019, Section 3; or

3. Prior authorization is required by the department and has not been granted prior to dispensing of the drug[~~has been denied or has not been requested~~].

(g) For a nursing facility resident meeting Medicaid nursing facility level of care criteria in accordance with 907 KAR 1:022, there shall not be more than one (1) dispensing fee allowed per provider per recipient per drug within a rolling twenty-four (24) day period unless[~~:~~]

1. The drug is a Schedule II, III, or IV controlled substance or a legend intravenous drug, in which case up to three (3) additional dispensing fees shall be allowed;

2. The drug is a nonsolid dosage form, in which case one (1) additional dispensing fee shall be allowed;

3. The prescribed dosage has been changed, in which case one (1) additional dispensing fee shall be allowed; or

4. The department determines that it is in the best interest of the recipient to allow the additional dispensing fee.

(h) For a nursing facility resident meeting Medicaid nursing facility level of care criteria and if appropriate and in accordance with 201 KAR 2:190 and 902 KAR 55:065, an unused drug, paid for by Medicaid, shall be returned to the originating pharmacy and the department shall be credited for the cost of the drug and the unit dose packaging cost.

(i)1. A maintenance drug shall be dispensed in accordance with 907 KAR 1:019.

2. The department shall not reimburse for a refill of a maintenance drug prior to the end of the dispensing period established in 907 KAR 1:019[~~to an outpatient service recipient, except for an individual receiving supports for community living services, up to a ninety-two (92) day supply with only one (1) initial dispensing fee and one (1) refill dispensing fee allowed within the ninety-two (92) day time period~~ unless the department determines that it is in the best interest of the recipient to allow any additional dispensations or dispensing fees; and

3.[~~2.~~] For an outpatient service recipient receiving services via the Supports for Community Living Program, there shall not be more than:

a. One (1) dispensing fee allowed per drug per calendar month for a drug classified by the Medicaid Program as a maintenance drug unless there is an exception described in clause c of this subparagraph;

b. Four (4) dispensing fees allowed per drug within a calendar month for a legend intravenous drug or a Schedule II, III or IV controlled substance; or

c.(i) Two (2) dispensing fees allowed per drug within a calendar month for a drug that is a nonsolid dosage form; or

(ii) Four (4) dispensing fees allowed per maintenance drug in one (1) month if a prescriber requests to prescribe less than a thirty (30) day supply based on medical specialty, best practice standards, and appropriateness of care.

(j) For a personal care recipient, there shall not be more than:

1. One (1) dispensing fee allowed per drug per calendar month for a drug classified by the Medicaid Program as a maintenance drug unless there is an exception described in subparagraph 3 of this paragraph;

2. Four (4) dispensing fees allowed per drug within a calendar month for a legend intravenous drug or a Schedule II, III or IV controlled substance; or

3.a. Two (2) dispensing fees allowed per drug within a calendar month for a drug that is a nonsolid dosage form; or

b. Four (4) dispensing fees allowed per maintenance drug in one (1) month if a prescriber requests to prescribe less than a thirty (30) day supply based on medical specialty, best practice standards, and appropriateness of care.

(k) Reimbursement shall not be made for more than one (1) prescription to the same recipient on the same day for a drug with the same:

1. National Drug Code (NDC); or

2. Generic name, strength, and dosage form.

(5) For a Medicaid recipient participating in a hospice program, payment for a drug shall be in accordance with 907 KAR 1:340.

(6) A pharmacy claim shall meet the point of sale (POS) requirements for services in accordance with 907 KAR 1:673.

(7) If a payment is made for a drug for which there is no authorization as required in accordance with 907 KAR 1:019, the provider shall reimburse the department the amount of the payment.

(8) A timely claim payment shall be processed in accordance with 42 C.F.R. 447.45.

(9) A claim in which retroactive eligibility is established shall be submitted up to twelve (12) months from the issue date noted on the Medicaid recipient's medical assistance identification card. If the date of service is greater than twelve (12) months old, the claim shall be submitted as a paper claim with a copy of the retroactive medical assistance identification card attached.

(10) Pursuant to KRS 205.622, prior to billing the department, a provider shall submit a bill to a third party payer[~~Medicare~~] if the provider has knowledge that the third party payer[~~Medicare~~] may be liable for payment.

(11)(a) If a provider is aware that a Medicaid recipient has additional insurance or if a recipient's[~~(11)(a) If the~~] medical assistance identification card indicates that the Medicaid recipient has additional insurance, the provider shall submit a bill to the third party in accordance with KRS 205.622.

(b) A provider who is aware that a recipient has other insurance, but no insurance is indicated on the medical assistance identification card, shall notify the department's fiscal agent of the third-party liability.

(12) Adherence to the requirements established in this section shall be monitored through an on-site audit, postpayment review of the claim, a computer audit or an edit of the claim.

(13)(a) A pharmacy of a covered entity as defined in 42 U.S.C. 256b which purchases drugs through the United States Public Health Service Discount Program in accordance with 42 U.S.C. 256b shall bill the department the pharmacy's actual 340B acquisition cost for all drugs[~~a drug~~]; and

(b) The department shall reimburse the pharmacy's actual 340B acquisition cost for the drug plus a dispensing fee in accordance with Section 3 of this administrative regulation.

(14) If a covered entity as defined in 42 U.S.C. 256b notifies the United States Office of Pharmacy Affairs that its pharmacy is not included under 42 U.S.C. 256b:

(a) The pharmacy shall submit its usual and customary amount for a drug; and

(b) The department shall reimburse for a drug in accordance with this section plus a dispensing fee in accordance with Section 3 of this administrative regulation.

Section 3. Dispensing Fees. (1) To determine a dispensing fee, the department shall comply with KRS 205.561.

(2) Except as provided in subsection (3) of this section and in accordance with KRS 205.561, the dispensing fee, unless excluded by Section 2(4)(d) of this administrative regulation, shall be:

(a) Five (5) dollars per prescription for a generic drug reimbursed through the Outpatient Drug Program if dispensed to an eligible recipient, including an eligible recipient in a nursing facility meeting the nursing facility level of care criteria requirements established in 907 KAR 1:022; and

(b) Four (4) dollars and fifty (50) cents per prescription for a brand name drug reimbursed through the outpatient drug program if dispensed to an eligible recipient, including an eligible recipient in

a nursing facility meeting the nursing facility level of care criteria requirements established in 907 KAR 1:022.

(3)(a) For a recipient in a nursing facility meeting the nursing facility level of care criteria requirements established in 907 KAR 1:022, a unit dose addition to the usual reimbursement shall be made for a drug dispensed through the Pharmacy Outpatient Drug Program in the amount of two (2) cents per unit dose for a nonunit dose drug repackaged in unit dose form by the pharmacist.

(b) The unit dose addition shall be paid, as appropriate, even though the usual dispensing fee of five (5) dollars for a generic drug or four (4) dollars and fifty (50) cents for a brand name drug is not paid due to monthly limits on dispensing fees or in accordance with Section 2(4)(d) of this administrative regulation.

Section 4. Reimbursement to Dispensing Physicians. A participating dispensing physician who practices in a county where a pharmacy is not located shall be reimbursed for the cost of the drug, with the cost computed:

(1) As the lesser of:

(a) The maximum-allowable cost or estimated acquisition cost established in Section 2(4) of this administrative regulation;

(b) The physician's usual and customary amount; or

(c) The federal upper limit; or

(2) In accordance with 907 KAR 3:010 for a free immunization through the Vaccines for Children Program.

Section 5. Incorporation by Reference. (1) The "Kentucky Medicaid MAC Price[~~MAC Price Inquiries and~~] Research Request Form", June 18, 2010[~~December 2004~~] edition, is incorporated by reference.

(2) This material may be inspected, copied, or obtained, subject to applicable copyright law, at the Department for Medicaid Services, 275 East Main Street, Frankfort, Kentucky 40621, Monday through Friday, 8 a.m. to 4:30 p.m.

NEVILLE WISE, Acting Commissioner
JANIE MILLER, Secretary

APPROVED BY AGENCY: September 28, 2011

FILED WITH LRC: October 3, 2011 at 10 a.m.

CONTACT PERSON: Jill Brown, Office of Legal Services, 275 East Main Street 5 W-B, Frankfort, Kentucky 40601, phone (502) 564-7905, fax (502) 564-7573.

REGULATORY IMPACT ANALYSIS AND TIERING STATEMENT

Contact Person: Trista Chapman or Stuart Owen

(1) Provide a brief summary of:

(a) What this administrative regulation does: This administrative regulation establishes the Medicaid program reimbursement policies for drugs dispensed to Medicaid recipients who are not enrolled with a managed care organization.

(b) The necessity of this administrative regulation: This administrative regulation is necessary to establish the Medicaid program reimbursement policies for drugs dispensed to Medicaid recipients who are not enrolled with a managed care organization.

(c) How this administrative regulation conforms to the content of the authorizing statutes: This administrative regulation conforms to the content of the authorizing statutes by establishing the Medicaid program reimbursement policies for drugs dispensed to Medicaid recipients who are not enrolled with a managed care organization.

(d) How this administrative regulation currently assists or will assist in the effective administration of the statutes: This administrative regulation will assist in the effective administration of the authorizing statutes by establishing the Medicaid program reimbursement policies for drugs dispensed to Medicaid recipients who are not enrolled with a managed care organization.

(2) If this is an amendment to an existing administrative regulation, provide a brief summary of:

(a) How the amendment will change this existing administrative regulation: The amendment eliminates average wholesale price (AWP) as a drug pricing component and replaces it with wholesale acquisition cost (WAC.) Wholesale acquisition cost is the list price on drugs for wholesalers and others prior to any rebates or discounts on the drugs.

(b) The necessity of the amendment to this administrative regulation: The amendment regarding average wholesale price (AWP) is necessary as AWP will no longer be published by First Databank, Inc. after September 26, 2011. The unavailability of AWP stems in part from the resolution of a civil court case - New England Carpenters Health Benefits Fund, et al. v. First Databank, Inc. – in which First Databank, Inc., was found to have incorrectly stated the AWP of drugs compared to the actual market price for drugs. First Databank Inc., publishes pharmaceutical industry market information including drug pricing surveys of a drug wholesaler to determine benchmarks for what drug wholesalers charges drug retailers. Insurers and Medicaid programs use First Databank Inc.'s pricing information in order to establish reimbursement to pharmacies or other providers.

(c) How the amendment conforms to the content of the authorizing statutes: The amendment conforms to the content of the authorizing statutes by replacing a drug pricing component that will no longer be published with one that will continue to be published. The drug pricing component is utilized to established Medicaid outpatient pharmacy program reimbursement.

(d) How the amendment will assist in the effective administration of the statutes: The amendment will assist in the effective administration of the authorizing statutes by replacing a drug pricing component that will no longer be published with one that will continue to be published. The drug pricing component is utilized to established Medicaid outpatient pharmacy program reimbursement.

(3) List the type and number of individuals, businesses, organizations, or state and local government affected by this administrative regulation: Pharmacies who dispense drugs to Medicaid recipients who are not enrolled with a managed care organization will be affected by this administrative regulation. Currently, there are over 1,100 pharmacies in Kentucky participating in the Medicaid program.

(4) Provide an analysis of how the entities identified in question (3) will be impacted by either the implementation of this administrative regulation, if new, or by the change, if it is an amendment, including:

(a) List the actions that each of the regulated entities identified in question (3) will have to take to comply with this administrative regulation or amendment: Pharmacies will not have to take any action. The amendment alters a drug pricing component utilized by the Department for Medicaid Services in establishing drug reimbursement but requires no action by pharmacies.

(b) In complying with this administrative regulation or amendment, how much will it cost each of the entities identified in question (3). No cost is imposed.

(c) As a result of compliance, what benefits will accrue to the entities identified in question (3). No action is required of pharmacies.

(5) Provide an estimate of how much it will cost to implement this administrative regulation:

(a) Initially: The Department for Medicaid Services (DMS) estimates that changing the drug pricing component will be budget neutral.

(b) Ongoing: DMS estimates that changing the drug pricing component will be budget neutral.

(6) What is the source of the funding to be used for the implementation and enforcement of this administrative regulation: The sources of revenue to be used for implementation and enforcement of this administrative regulation are federal funds authorized under Title XIX of the Social Security Act and state matching funds of general fund appropriations.

(7) Provide an assessment of whether an increase in fees or funding will be necessary to implement this administrative regulation, if new, or by the change if it is an amendment: Neither an increase in fees nor funding is necessary.

(8) State whether or not this administrative regulation establishes any fees or directly or indirectly increases any fees: This administrative regulation neither establishes nor directly nor indirectly increases any fee.

(9) Tiering: Is tiering applied? Tiering is applied in the sense that the dispensing fee for generic drugs is higher than the dis-

pensing fee for brand name drugs in order to promote the dispensing of generic drugs.

FEDERAL MANDATE ANALYSIS COMPARISON

1. Federal statute or regulation constituting the federal mandate. 42 U.S.C. 1396a(a)(30), 42 C.F.R. 447.204 and 42 U.S.C. 1396r-8.

2. State compliance standards. KRS 205.520(3) states, "Further, it is the policy of the Commonwealth to take advantage of all federal funds that may be available for medical assistance. To qualify for federal funds the secretary for health and family services may by regulation comply with any requirement that may be imposed or opportunity that may be presented by federal law. Nothing in KRS 205.510 to 205.630 is intended to limit the secretary's power in this respect."

3. Minimum or uniform standards contained in the federal mandate. Medicaid reimbursement rates must be consistent with efficiency, economy, and quality of care and sufficient to enlist enough providers so that care and services are available at least to the extent that such care and services are available to the general population in the same geographic area. Medicaid reimbursement for many covered outpatient drugs is subject to federal upper limits. A formula for calculating limits is established in federal law. Drug manufacturers must have an agreement to pay rebates to the state Medicaid program as a condition of receiving reimbursement. The rebate formula is also established in federal law. Both drug manufacturers and state Medicaid programs are required to report drug utilization and drug prices paid to the Centers for Medicare and Medicaid Services.

4. Will this administrative regulation impose stricter requirements, or additional or different responsibilities or requirements, than those required by the federal mandate? The amendment does not impose stricter, additional or different requirements than those required by the federal mandate.

5. Justification for the imposition of the stricter standard, or additional or different responsibilities or requirements. Stricter requirements are not imposed, a managed care model is not federally mandated for Medicaid programs.

FISCAL NOTE ON STATE OR LOCAL GOVERNMENT

1. Does this administrative regulation relate to any program, service, or requirements of a state or local government (including cities, counties, fire departments or school districts)? Yes

2. What units, parts or divisions of state or local government (including cities, counties, fire departments, or school districts) will be impacted by this administrative regulation? The Department for Medicaid Services will be affected by this administrative regulation.

3. Identify each state or federal regulation that requires or authorizes the action taken by the administrative regulation. This administrative regulation and 42 C.F.R. 447.204 authorize the action taken by this administrative regulation.

4. Estimate the effect of this administrative regulation on the expenditures and revenues of a state or local government agency (including cities, counties, fire departments, or school districts) for the first full year the administrative regulation is to be in effect.

(a) How much revenue will this administrative regulation generate for the state or local government (including cities, counties, fire departments, or school districts) for the first year? None.

(b) How much revenue will this administrative regulation generate for the state or local government (including cities, counties, fire departments, or school districts) for subsequent years? None.

(c) How much will it cost to administer this program for the first year? DMS estimates that changing the drug pricing component will be budget neutral.

(d) How much will it cost to administer this program for subsequent years? DMS estimates that changing the drug pricing component will be budget neutral.

Note: If specific dollar estimates cannot be determined, provide a brief narrative to explain the fiscal impact of the administrative regulation.

Revenues (+/-)

Expenditures (+/-)

Other Explanation:

ADMINISTRATIVE REGULATIONS AS AMENDED BY PROMULGATING AGENCY AND REVIEWING SUBCOMMITTEE

ARRS = Administrative Regulation Review Subcommittee
IJC = Interim Joint Committee

EDUCATION PROFESSIONAL STANDARDS BOARD
(As Amended at ARRS, October 11, 2011)

16 KAR 2:040. Interdisciplinary early childhood education, birth to primary.

RELATES TO: KRS 157.3175, 161.020, 161.030
STATUTORY AUTHORITY: KRS 161.028, 161.030
NECESSITY, FUNCTION, AND CONFORMITY: KRS 161.020 and 161.030 require that a teacher and other professional school personnel hold a certificate of legal qualifications for the respective position to be issued upon completion of a program of preparation prescribed by the Education Professional Standards Board. KRS 161.028(1)(a) requires the Education Professional Standards Board to establish the standards for obtaining and maintaining a teaching certificate. KRS 161.028(1)(b) requires an educator preparation [~~a teacher education~~] institution be approved for offering the preparation program corresponding to a particular certificate on the basis of standards and procedures established by the Education Professional Standards Board. KRS 161.028(1)(f) requires the Education Professional Standards Board to issue and renew any certificate. This administrative regulation establishes the professional certificate for interdisciplinary early childhood education, birth to primary; the interdisciplinary early childhood education teacher **performance** standards; and the standards for approval of a program leading to this certificate.

Section 1. Definitions. (1) "Culturally diverse" means the wide range of differences among individuals that result from cultural and ethnic backgrounds, socioeconomic status, gender, personality traits, physical abilities and disabilities, and the interaction of factors of variability.
(2) "Family-centered services" means services in which family needs and desires determine all aspects of service delivery and resource provisions that promote family decision-making capabilities and competencies.
(3) "Interdisciplinary" means a preparation program combining early childhood and early childhood special education.
(4) "Teacher performance standard" means a set of teaching and managing tasks that an early childhood educator shall be able to demonstrate in early childhood programs.

Section 2. (1) The professional certificate for interdisciplinary early childhood education, birth to primary, shall be issued to an applicant who has completed:
(a) A bachelor's degree and the approved program of preparation for this certificate as described in Sections 6, 7, and 8 [~~7, 8, and 9~~] of this administrative regulation at an educator preparation [~~a teacher education~~] institution approved by the Education Professional Standards Board with:
1. A cumulative minimum grade point average of 2.50 on a 4.00 scale; or
2. A minimum grade point average of 3.00 on a 4.00 scale on the last sixty (60) hours of credit completed, including undergraduate and graduate coursework;
(b) The approved written assessments established in [~~subsection (2) of this section and~~] 16 KAR 6:010; and
(c) The Kentucky Teacher Internship Program established in **[**~~subsection (3) of this section and~~**]** 16 KAR 7:010.
(2)[~~(a) In order to satisfy the testing prerequisites for teacher certification as required by KRS 161.030, the applicant shall score at least 150, the minimum passing score, on the Kentucky test of interdisciplinary early childhood.~~
~~(b) The assessment shall be waived for an out-of-state teacher who has two (2) or more years of successful experience in a position teaching children from birth to entry into the primary program on at least a half-time basis and whose preparation corresponds to the interdisciplinary early childhood education outlined in this administrative regulation.~~
~~(3)(a) The Education Professional Standards Board shall issue the one (1) year provisional certificate for the Kentucky Teacher Internship Program established in KRS 161.030 and 16 KAR 7:010 upon the applicant's confirmation of employment in a position teaching children from birth to entry into a primary program on at least a half-time basis in a school which meets the criteria identified in KRS 161.030.~~
~~(b) A teacher who has successfully completed the Kentucky Teacher Internship Program prior to issuance of the initial certificate for interdisciplinary early childhood education or who is not required to complete the internship program under the requirements for out-of-state teachers established in KRS 161.030(5) shall not be required to complete the internship program again for issuance of the professional certificate for interdisciplinary early childhood education, birth to primary.~~
~~(4)~~] To apply for the professional certificate for interdisciplinary early childhood education, birth to primary, an applicant shall submit a completed Form TC-1**, incorporated by reference in 16 KAR 2:010,** to the Education Professional Standards Board.

Section 3. The professional certificate for interdisciplinary early childhood education, birth to primary, shall be issued and renewed in accordance with the provisions of KRS 161.030, 16 KAR 2:010, and 16 KAR Chapter 4.

Section 4. (1) The professional certificate for interdisciplinary early childhood education, birth to primary, shall be valid for teaching children from birth to entry into the primary program, including teaching children in kindergarten or another program for five (5) year old children if the program is operated separately from the primary program.
(2) A person holding this certificate shall serve as a primary developer and implementer of an individual program for children with or without disabilities including an individual education plan (IEP) and individual family service plan (IFSP) with consultation and support from a specialist according to the needs of the child.

Section 5. [~~(1) A teacher serving in a position identified in Section 4 of this administrative regulation as an early childhood teacher during the 1998-99, 1999-2000, 2000-2001, or 2001-2002 school year in a district with an approved preschool program shall:~~
~~(a) Submit a completed Form TC-1-APP to the Education Professional Standards Board; and~~
~~(b) Be eligible to continue serving in the same position without additional certification.~~
~~(2) Upon application to the Education Professional Standards Board, a teacher shall receive an approval letter certifying eligibility.~~
~~Section 6.~~] An educator preparation[~~A teacher preparation~~] institution offering an approved program of preparation leading to the professional certificate for interdisciplinary early childhood education, birth to primary, shall establish an assessment system to judge the performance of a candidate on the interdisciplinary early childhood education teacher performance standards identified for this certificate.

Section **6**[~~7~~]. Standards for Program of Preparation. In order to receive approval of the Education Professional Standards Board, a program of preparation leading to the professional certificate for interdisciplinary early childhood education, birth to primary, shall meet the **[**~~following~~**]** standards **established in this section.[**~~:~~**]**
(1) The program shall be designed to prepare candidates to teach and manage tasks as identified in the teacher **performance** standards established in Section **8[**~~9~~**]** of this administrative regulation and as required in the "New Teacher Standards for Prepara-

tion and Certification: Interdisciplinary Early Childhood, Birth to Primary - Standards with Criteria and Preamble**.[**;**]**"

(2) The program shall include a system of continuous assessment to evaluate a candidate's progress and level of attainment on the interdisciplinary early childhood education teacher **performance** standards. The assessments shall include performance on authentic teaching and managing tasks in settings that are inclusive of children across abilities and contexts. [~~Candidates shall be evaluated by paper and pencil tests and authentic assessments of performance~~]**[;]**

(3) The program shall ensure that candidates from culturally diverse backgrounds are recruited and retained in the program**.[**;**]**

(4) The program shall provide the candidate with knowledge and experiences to perform teaching and managing tasks identified in the teacher **performance** standards with children from culturally diverse backgrounds**.[**;**]**

(5) The program shall include a student teaching experience in accordance with 16 KAR 5:040, which shall be supervised by a teacher who has a:

(a) Letter of approval issued by the Education Professional Standards Board certifying eligibility to continue teaching in an interdisciplinary early childhood position; or

(b) Rank II certification with emphasis in early childhood and **at least** three (3) years of teaching experience**.[**;**]**

(6) The program shall be based on:

(a) The National Association for the Education of Young Children (NAEYC) Standards for Early Childhood Professional Preparation; and

(b) The Council for Exceptional Children (CEC) content standards for:

1. Beginning special education teachers of early childhood students set out in CEC Content Standards for All Beginning Special Education Teachers; and

2. Beginning special education teacher common core set out in CEC Knowledge and Skill Base for All Beginning Special Education Teachers of Early Childhood Students**.[**~~; and~~**]**

(7) The program shall adhere to the program guidelines established in 16 KAR 5:010.

Section 7[~~8~~]. Application for Program Approval. **[**~~(1)~~**]** An educator **preparation** [~~A teacher education~~] institution that proposes to offer a program of preparation leading to the professional certificate for interdisciplinary early childhood education, birth to primary, shall make application for approval to the Education Professional Standards Board. The application for approval shall include a program description including the following:

(1)[~~(a)~~**]** Program outcomes that include teacher **performance** standards for interdisciplinary early childhood education;

(2)[~~(b)~~**]** Program components that provide a list of coursework, clinical and field experiences, and student teaching related to general education, interdisciplinary specialty studies, and professional studies;

(3)[~~(c)~~**]** A list of faculty responsible for and involved with the conduct of the specific program and their qualifications;

(4)[~~(d)~~**]** A description of candidate [~~student~~] admission and retention policies and procedures that are specific to this program;

(5)[~~(e)~~**]** A description of the system of continuous assessment of interdisciplinary early childhood education teacher **performance** standards; and

(6)[~~(f)~~**]** Adherence with the program approval guidelines established in 16 KAR 5:010.

[~~(2) An institution may receive interim program approval for a one (1) year period that may be extended for one (1) additional year while the institution develops the assessments required by Section 7(2) of this administrative regulation. By the end of the period of interim approval, the institution shall apply for full approval to the Education Professional Standards Board.~~]

Section 8[~~9~~]. **Interdisciplinary Early Childhood Education** Teacher **Performance** Standards. (1) Teacher **Performance** Standard I. The interdisciplinary early childhood education (IECE) educator designs and plans experiences and instruction that support the development and learning of infants, toddlers, preschool children, and kindergarten children, including those with disabilities.

(2) Teacher **Performance** Standard II. The IECE educator creates and maintains learning environments in a variety of settings that support the development and learning of infants, toddlers, preschool children, and kindergarten children, including those with disabilities.

(3) Teacher **Performance** Standard III. The IECE educator introduces, implements, and facilitates experiences and instruction that support development and learning for infants, toddlers, preschool children, and kindergarten children, including those with disabilities.

(4) Teacher **Performance** Standard IV. The IECE educator, in collaboration with others, assesses the development and ongoing learning of infants, toddlers, preschool children, and kindergarten children, including those with disabilities, and communicates the results with partners, including families.

(5) Teacher **Performance** Standard V. The IECE educator reflects on and evaluates professional practices that support the development and learning of infants, toddlers, preschool children, and kindergarten children, including those with disabilities.

(6) Teacher **Performance** Standard VI. The IECE educator collaborates and consults with team members including colleagues, families, primary caregivers, agency personnel, and other service personnel to design and implement experiences and instruction that support the development and learning of infants, toddlers, preschool children, and kindergarten children, including those with disabilities.

(7) Teacher **Performance** Standard VII. The IECE educator engages in self-evaluation of professional practices and implements a professional development plan to improve the educator's performance.

(8) Teacher **Performance** Standard VIII. The IECE educator supports families through family-centered services that promote independence and self-determination.

(9) Teacher **Performance** Standard IX. The IECE educator uses technology to support instruction; access and manipulate data; enhance professional growth and productivity; communicate and collaborate with colleagues, families, and community agencies; and conduct research.

Section **9**[~~10~~]. Incorporation by Reference. (1) The following material is incorporated by reference:

(a) **"**The Council for Exceptional Children (CEC) Content Standards for All Beginning Special Education Teachers**"**, 2001;

(b) **"**CEC Knowledge and Skill Base for All Beginning Special Education Teachers of Early Childhood Students**"**, 2001;

(c) **"**The National Association for the Education of Young Children (NAEYC) Standards for Early Childhood Professional Preparation**"**, 2001; and

(d) "New Teacher Standards for Preparation and Certification: Interdisciplinary Early Childhood Education, Birth to Primary - Standards with Criteria and Preamble", September 2002, Education Professional Standards Board**.[**;**]**[(~~a) Form TC-1, rev. 10/02, Education Professional Standards Board;~~

~~(b) "New Teacher Standards for Preparation and Certification: Interdisciplinary Early Childhood Education, Birth to Primary - Standards with Criteria and Preamble", September 2002, Education Professional Standards Board;~~

~~(c) Form TC-1-APP, Application for Kentucky Certification or Change in Salary Rank, April 2001;~~

~~(d) NAEYC Standards for Early Childhood Professional Preparation, 2001;~~

~~(e) CEC Content Standards for All Beginning Special Education Teachers, 2001; and~~

~~(f) CEC Knowledge and Skill Base for All Beginning Special Education Teachers of Early Childhood Students, 2001.~~]

(2) This material may be inspected, copied, or obtained, subject to applicable copyright law, at the Education Professional Standards Board, 100 Airport Road, 3rd Floor, Frankfort, Kentucky 40601, Monday through Friday, 8 a.m. to 4:30 p.m.

LORRAINE WILLIAMS, Chairperson

APPROVED BY AGENCY: August 1, 2011

FILED WITH LRC: August 10, 2011 at 1 p.m.

CONTACT PERSON: Alicia A. Sneed, Director of Legal Services, Education Professional Standards Board, 100 Airport Road, Third Floor, Frankfort, Kentucky 40601, phone (502) 564-4606, fax (502) 564-7080

EDUCATION PROFESSIONAL STANDARDS BOARD
(As Amended at ARRS, October 11, 2011)

16 KAR 5:040. Admission, placement, and supervision in student teaching.

RELATES TO: KRS 161.020, 161.028, 161.030, 161.042
STATUTORY AUTHORITY: KRS 161.028, 161.030, 161.042
NECESSITY, FUNCTION, AND CONFORMITY: KRS 161.028 requires that an educator preparation institution be approved for offering the preparation program corresponding to a particular certificate on the basis of standards and procedures established by the Education Professional Standards Board. KRS 161.030 requires that a certificate **[**~~shall~~**]** be issued to a person who has completed a program approved by the Education Professional Standards Board. KRS 161.042 requires the Education Professional Standards Board to promulgate an administrative regulation relating to student teachers, including the qualifications for cooperating [~~supervising~~] teachers. This administrative regulation establishes the standards for admission, placement, and supervision in student teaching.

Section 1. Definition. "Cooperating teacher" [~~or "supervising teacher"~~] means a teacher employed in a public school or a nonpublic school which meets the state performance standards as established in KRS 156.160 or which has been accredited by a regional or national accrediting association [~~school in Kentucky~~] who is contracting with an educator preparation institution to supervise a student teacher for the purpose of fulfilling the student teaching requirement of the approved educator preparation program.

Section 2. Cooperating Teacher Eligibility Requirements. (1) [~~Except as provided in subsection (2) of this section,~~] The cooperating teacher, whether serving in a public or nonpublic school, shall have:

(a) A valid [~~Kentucky~~] teaching certificate or license for each grade and subject taught; and

(b) [~~Attained Rank II certification;~~

~~(c)~~] At least three (3) years of teaching experience as a certified educator. [~~on a Professional Certificate; and~~

~~(d) Taught in the present school system at least one (1) year immediately prior to being assigned a student teacher.~~]

(2) **A teacher** **[**~~Teachers~~**]**[~~If a cooperating teacher has not attained Rank II certification, the teacher shall have attained a minimum of fifteen (15) hours of approved credit toward a Rank II within a minimum period of five (5) years.~~

~~(3)~~] **[**~~Teachers~~**]** assigned to a teaching position on the basis of a provisional, probationary, or emergency certificate issued by the Education Professional Standards Board shall not be eligible for serving as a cooperating teacher.

(3) [~~(4) In selecting a cooperating teacher,~~] The district and educator preparation **program** shall select teachers to be cooperating **teachers[**~~teacher~~**]** who demonstrate the following: [~~give consideration to the following criteria:~~]

(a) [~~A demonstrated ability to engage in~~] Effective classroom management techniques that promote an environment conducive to learning;

(b) [~~An ability to model~~] Best practices for the delivery of instruction;

(c) Mastery [~~A mastery~~] of the content knowledge or subject matter being taught;

(d) [~~The demonstration of an~~] Aptitude and ability to contribute to the mentoring and development of a preservice educator;

(e) Usage of [~~An ability to use~~] multiple forms of assessment to inform instruction; and

(f) Creation of learning communities that value and build upon students' diverse backgrounds.

(4) An educator preparation program shall give a teacher who holds a teacher leader endorsement pursuant to 16 KAR 5:010**,** Section 12(3)**,** priority consideration when selecting a cooperating teacher.

(5) Beginning September 1, 2013, prior to student teacher placement, a cooperating teacher shall receive training approved by the Education Professional Standards Board and provided at no cost to the cooperating teacher by the educator preparation institution which shall include the following components:

(a) Basic responsibilities of a cooperating teacher**;[**~~,~~**]**

(b) Best practice in supporting the student teacher**;[**~~,~~**]** and

(c) Effective assessment of the student teacher.

(6) Beginning September 1, 2013, educator preparation programs shall maintain a pool of cooperating teachers who have met the requirements of this section.

(7) Beginning September 1, 2013, each educator preparation institution shall file an electronic report with the Education Professional Standards Board every semester which identifies the following:

(a) Each candidate at the educator preparation institution enrolled in student teaching;

(b) The candidate's assigned school;

(c) The cooperating teacher assigned to each candidate;

(d) The cooperating teacher's area of certification;

(e) The cooperating teacher's years of experience as a certified or licensed educator; and

(f) The date the cooperating teacher completed the training required in subsection (5) of this section.[~~An ability to create a learning community that values and builds upon students' diverse cultures.~~]

Section 3. Admission to Student Teaching. In addition to the appropriate sections of the National Council for Accreditation of Teacher Education (NCATE) standards which are incorporated by reference in [~~under~~] 16 KAR 5:010, each educator preparation institution shall determine minimum standards for admission to student teaching which shall include the procedures established in this section. Admission to student teaching shall include a formal application procedure for each teacher candidate.

(1) A record or report from a valid and current medical examination, which shall include a tuberculosis (TB) risk assessment, [~~have included a tuberculosis test,~~] shall be placed on file with the admissions committee.

(2) Prior to and during the student teaching experience, the teacher candidate shall adhere to the Professional Code of Ethics for Kentucky School Personnel established in 16 KAR 1:020.

(3) Beginning September 1, 2013, prior to admission to student teaching**,** each teacher candidate shall complete a minimum of 200 clock hours of field experiences in a variety of primary through grade 12 **(P-12)** school settings which allow the candidate to participate in the following:

(a) Engagement with diverse populations of students which include:

1. Students from a minimum of two (2) different ethnic or cultural groups of which the candidate would not be considered a member;

2. Students from different socioeconomic groups;

3. English language learners;

4. Students with disabilities; and

5. Students from across elementary, middle school, and secondary grade levels;

(b) Observation in schools and related agencies, including **[**~~but not limited to~~**]**:

1. Family Resource Centers**;[**~~,~~**]** or

2. Youth Service Centers;

(c) Student tutoring;

(d) Interaction with families of students;

(e) Attendance at school board and school-based council meetings;

(f) Participation in a school-based professional learning community; and

(g) Opportunities to assist teachers or other school professionals.

(4) The educator preparation program shall require the candi-

date to submit a record of all clinical hours for review and confirmation that the candidate has fulfilled the field experiences required in subsection (3) of this section.

(5) The educator preparation program shall maintain electronic records that confirm that all candidates enrolled in student teaching after September 1, 2013, have fulfilled the field experiences required in subsection (3) of this section.

Section 4. Cooperating Teacher to Student Teacher Ratio. [~~Teacher student Ratio.~~] The ratio of student teachers to cooperating teachers shall be one (1) to one (1).

Section 5. University [~~College~~] Supervisor. (1) The university [~~college~~] supervisor shall make periodic observations of the student teacher in the classroom and shall prepare a written report on each observation and share it with the student teacher.

(2) The observation reports shall be filed as a part of the student teacher record and [~~also~~] used as a validation of the supervisory function.

(3) A student teacher shall receive periodic and regular on-site observations and critiques of the actual teaching situation a minimum of four (4) times, excluding seminars and workshops.

(4) The university [~~college~~] supervisors shall be available to work with the student teacher and personnel in the cooperating school regarding any problems that may arise relating to the student teaching situation.

(5) The educator preparation program shall select a clinical faculty member to serve as a university supervisor who demonstrates the following:

(a) Effective classroom management techniques that promote an environment conducive to learning;

(b) Best practices for the delivery of effective instruction;

(c) Dispositions that contribute to the mentoring and development of a preservice educator;

(d) Knowledge and skills in the use of formative and summative assessments; and

(e) The ability to participate in a community of professionals committed to supporting the effective instructional practice of each student teacher.

(6) Beginning September 1, 2013, university supervisors shall receive training approved by the Education Professional Standards Board and provided at no cost to the university supervisor by the educator preparation institution which shall include the following components:

(a) Basic responsibilities of a university supervisor;

(b) Best practice in supporting the student teacher; and

(c) Effective assessment of the student teacher.

(7) Beginning September 1, 2013, educator preparation programs shall maintain a pool of clinical faculty members who have met the requirements of this section.

Section 6. Professional Experience. (1) In addition to the appropriate NCATE standards incorporated by reference **in[**~~under~~**]** 16 KAR 5:010, the educator preparation institution shall provide opportunities [~~an opportunity~~] for the student teacher to assume major responsibility for the full range of teaching duties, including extended co-teaching experiences, in a real school situation under the guidance of qualified personnel from the educator preparation institution and the cooperating elementary, middle, or high school. [~~In placing the student teachers in classroom settings,~~] The educator preparation program and the school district shall make reasonable efforts to place student teachers in settings that provide opportunities for the student teacher to develop and demonstrate the practical skills, knowledge, and professional dispositions essential to help all P-12 students learn and develop.

(2) **A[**~~No~~**]** student teacher shall **not** be placed in a setting that is not consistent with his or her planned certification content and grade range.

(3) Beginning September 1, 2013, the student teacher placement shall provide the student teacher with the opportunity to engage with diverse populations of students.

(4) Beginning September 1, 2013, each educator preparation institution shall provide a full professional semester to include a period of student teaching for a minimum of seventy (70) full days, or **its** equivalent, in instructional settings that correspond to the grade levels and content areas of the student teacher's certification program.

(a) Candidates pursuing a primary through grade 12 certificate shall have their student teaching balanced between an elementary school placement and middle school or high school placement.

(b) Candidates pursuing an elementary certificate shall have their student teaching balanced between a placement in primary through grade 3 and a placement in grade 4 **or[**~~through~~**]** grade 5.

(c) Candidates seeking dual certification in either middle school or secondary content areas shall have equal placements in both content areas.

(5) Beginning September 1, 2013, the educator preparation program shall support the student teacher's placement and classroom experiences by:

(a) Cooperating with the district in determining the specific placement of the student teacher;

(b) Collaborating with the district to provide necessary program resources and expertise;

(c) Using multiple performance assessments to document the student teacher's ability to support learning for all P-12 students;

(d) Requiring the use of technology by the student teacher to:

1. Enrich the learning of P-12 students; and

2. Support the student teacher's professional growth and communication; **and**

(e) Providing opportunities for the student teacher to:

1. Engage in extended co-teaching experiences with an experienced teacher;

2. Engage in reflective self-assessment that informs practice;

3. Maintain regular professional conversations with experienced teachers other than the cooperating teacher;

4. Participate in regular and extracurricular school activities;

5. Participate in professional decision making; and

6. Engage in collegial interaction and peer review with other student teachers.

(6) The educator preparation program **shall[**~~may~~**]** use the Kentucky Teacher Internship Program Teacher Performance Assessment tasks **established** in 16 KAR 7:010**,** Section 2**,** or a variation of these tasks to meet the requirement specified in subsection (5) of this section.

(7) **[**~~At no time shall~~**]** A student teacher **shall not** have responsibility for the supervision or instruction of P-12 students without the direct supervision of a certified educator.

(8) A student teacher shall not **[**~~be permitted to~~**]** be employed within the school in which he or she is assigned concurrent with student teaching.

(9) The educator preparation program shall maintain electronic records that confirm that all students admitted after September 1, 2013, meet the requirements of this section. [~~experiences, situations, and challenges similar to those encountered by first year teachers.~~]

[~~(2)~~**]** [~~Each educator preparation institution shall provide a full professional semester to include a period of student teaching for a minimum of twelve (12) weeks, full day, or equivalent, in school settings that correspond to the grade levels each and content area of the student teacher's certification program.~~]

Section 7. Compensation of Cooperating Teachers. (1) The Education Professional Standards Board may make arrangements with local school districts to compensate a cooperating teacher.[~~shall contract with the local school district, or make other appropriate arrangements, for the direct service of a cooperating teacher to each student teacher.~~]

(2)(a) The educator preparation institution shall electronically submit a report of all cooperating teachers and their corresponding student teachers to the Education Professional Standards Board:

1. On or before October 15 for a cooperating teacher supervising a student teacher during the fall semester; or

2. On or before February 15 for a cooperating teacher supervising a student teacher during the spring semester.

(b) Each report shall include:

1. The number of contract weeks that the cooperating teacher is working with each student teacher for that semester;

2. The cooperating teacher's full name and Social Security

[~~certificate~~] number;

3. The student teacher's full name, Social Security number, demographic data, and contact information;

4. The student teacher's preparation and certification area by assigned certification code; **and**

5. The names [~~and assigned codes~~] of the school district and school [~~district~~] where the cooperating teacher is employed and the student teaching requirement is being fulfilled. If the certified cooperating teacher is employed in a nonpublic school which meets the state performance standards as established in KRS 156.160 or which has been accredited by a regional or national accrediting association, the institution shall submit the name[~~, assigned code, and address~~] of the school.

(c) If an educator preparation institution fails to provide the report by the date established in paragraph (a) of this subsection, the Education Professional Standards Board shall not be liable for payment under this administrative regulation.

(3)(a) Upon receipt of the report, the Education Professional Standards Board shall contact each cooperating teacher by electronic mail **and forward a copy of the Instructions for Electronic Payment Vouchers to the cooperating teacher to provide**[~~with~~] instructions on how to create and electronically sign an electronic payment voucher. [~~submit a "Cooperating Teacher Payment Voucher" to each cooperating teacher.~~]

(b) The electronic payment voucher[~~, or its electronic equivalent if available,~~] shall be electronically signed by the cooperating teacher, building principal, and the college supervisor as verification of the cooperating teacher's service to the student teacher and submitted to the Education Professional Standards Board:[~~.~~

~~(c) To be eligible for compensation under this administrative regulation, the cooperating teacher shall submit the completed voucher to the Education Professional Standards Board:~~]

1. On or before December 15 [~~for a cooperating teacher supervising a student teacher~~] during the fall semester; or

2. On or before May 1 [~~for a cooperating teacher supervising a student teacher~~] during the spring semester.

(c) [~~(d)~~] If a cooperating teacher fails to provide the completed electronic payment voucher[~~, or its electronic equivalent,~~] by the date established in paragraph (b) [~~(c)~~] of this subsection, the cooperating teacher shall not be eligible to receive any compensation available under this administrative regulation.

(4)(a) The payment to a cooperating teacher shall be determined based upon available funding allocated under the biennial budget bill and the total number of weeks served by all cooperating teachers reported for the fiscal year.

(b) The payment shall be allocated to a cooperating teacher based upon the number of weeks the teacher supervised a student teacher as reported in subsections (2) and (3) of this section.

(5) Payments to cooperating teachers shall be disbursed to the school districts or to cooperating teachers in nonpublic schools by the Education Professional Standards Board:

(a) On an annual basis; and

(b) On or before June **30** [~~15~~].

(6) [~~Compensation to cooperating teachers shall be provided under this administrative regulation if state funds are appropriated for this purpose.~~] Any payment of state funds under this administrative regulation shall:

(a) Be a supplement to the compensation provided by an educator preparation institution to a cooperating teacher who is supervising an institution's student teacher; and

(b) Not supplant the educator preparation **institution's[**~~institutions'~~**]** compensation responsibility.

Section 8. Incorporation by reference. (1) "Instructions for Electronic Payment Vouchers", October 2011, is incorporated by reference.

(2) This material may be inspected, copied, or obtained, subject to applicable copyright law, at the Education Professional Standards Board, 100 Airport Road, 3rd Floor, Frankfort, Kentucky 40601, Monday through Friday, 8 a.m. to 4:30 p.m.[~~Section 8. Incorporation by Reference. (1) "Cooperating Teacher Payment Voucher", revised 7/2000, is incorporated by reference.~~

~~(2) This material may be inspected, copied, or obtained, subject to applicable copyright law, at the Education Professional Standards Board, 100 Airport Road, 3rd Floor, Frankfort, Kentucky 40601, Monday through Friday, 8 a.m. to 4:30 p.m.~~]

LORRAINE WILLIAMS, Chairperson

APPROVED BY AGENCY: August 1, 2011

FILED WITH LRC: August 10, 2011 at 1 p.m.

CONTACT PERSON: Alicia A. Sneed, Director of Legal Services, Education Professional Standards Board, 100 Airport Road, Third Floor, Frankfort, Kentucky 40601, phone (502) 564-4606, fax (502) 564-7080.

EDUCATION PROFESSIONAL STANDARDS BOARD
(As Amended at ARRS, October 11, 2011)

16 KAR 9:090. University [-]based alternative certification program for teachers of world languages.

RELATES TO: KRS 161.020, 161.028, **[**~~KRS~~**]** 161.030, **[**~~KRS~~**]** 161.048, **[**~~KRS~~**]** 161.1221

STATUTORY AUTHORITY: KRS 161.028, **[**~~KRS~~**]** 161.030, **[**~~KRS~~**]** 161.048

NECESSITY, FUNCTION, AND CONFORMITY: **KRS** 161.028 and **[**~~KRS~~**]** 161.030 authorize the Education Professional Standards Board to establish standards and requirements for obtaining and maintaining a teaching certificate and to set standards to approve and evaluate educator preparation programs. KRS 161.048(7) authorizes the Education Professional Standards Board to approve alternative programs that enroll students in postbaccalaureate educator preparation programs concurrently with employment as a teacher in a local school district. This administrative regulation establishes the program **requirements[**~~requirements~~**]** and candidate qualifications for the university-based alternative certification program for teachers of world languages and the requirements for issuance of a temporary provisional certificate to teach world languages.

Section 1. Definitions. (1) "University-based alternative certification program" means **a** postbaccalaureate educator preparation program that enrolls **a** teacher **candidate[**~~candidates~~**]** concurrently with employment as a teacher in a local school district.

(2) "World language" means any currently spoken and written language other than English.

Section 2. An accredited college or university, or a consortium of **[**~~such~~**]** institutions**,** may apply to the Education Professional Standards Board for approval to provide a university **[-]**based alternative certification program for teachers of world languages **if the college, university, or consortium meets the requirements established in Section 4(1) of this administrative regulation**.

Section 3. Admission Requirements. **To be admitted[**~~(1) Admission~~**]** to a postbaccalaureate educator preparation program that enrolls **a candidate[**~~candidates~~**]** concurrently with employment as a teacher of world **language, the individual shall have[**~~languages shall require the following~~**]**:

(1)[~~(a)~~**]** A bachelor's degree from an accredited college or university with the **required** cumulative grade point average **[**~~established in 16 KAR 4:020 Section 1(2)~~**]**; and

(2)[~~(b)~~**]** Successful completion of the program's approved assessments to measure proficiency for program admission as established in Section 4(1)(a) of this **administrative** regulation.

Section 4. University Requirements. (1) In addition to the standards for program approval established in 16 KAR 5:010, the university **[-]**based alternative certification program for teachers of world languages shall:

(a) Select assessments to measure proficiency for program admission, which shall include:

1. A nationally recognized assessment for written and oral proficiency in the world language area in which the candidate is seeking certification; and

2. A nationally recognized assessment for oral and written

proficiency in English language usage;

(b) Establish a protocol to assess a candidate's educational background to develop a plan of coursework that shall adequately prepare the candidate for successful completion of the requirements for program completion and certification for the areas and grades that correspond with the candidate's school placement;

(c) Design coursework and mentoring to permit a candidate to maintain employment in an eligible position and successfully complete any applicable assessments, including internship programs, within a period of three (3) years;

(d) Develop an agreement to provide, in collaboration with the administration of a candidate's employing school, mentoring to the candidate in the employment setting**,** which **shall include[**~~includes~~**]**:

1. Prior to the candidate's enrollment in the Kentucky Teacher Internship pursuant to KRS 161.030 and 16 KAR 7:010, a minimum of fifteen (15) hours of annual observation utilizing university faculty and a district-based mentor of the candidate practicing instruction in the classroom;

2. A description of how support shall be offered to the candidate during in-class and out-of-class time to assist the candidate in meeting the teacher's instructional responsibilities;

3. An acknowledgement by the employing school district that the school district shall be responsible for all costs associated with providing school district mentors for the teacher;

4. The name, contact person, and role for the collaborating educator preparation institution mentor; and**[**~~,~~**]**

5. The names and roles of the school district mentor teachers;

(e) Require the candidate to begin course work no later than ninety (90) days from the date the eligibility notice is issued; and

(f) Establish a process to maintain regular communications with the employing school so that the institution and employing school may assist the candidate as needed and address identified areas of improvement.

(2) Student teaching shall not be required for program completion.

Section 5. Temporary Provisional Certificate for World Language. (1) The temporary provisional certificate for world language shall be issued for a validity period not to exceed one (1) year.

(2) The temporary provisional certificate for world language may be renewed a maximum of two (2) times.

(3) The temporary provisional certificate for world language shall be:

(a) Issued in accordance with a grade level and specialization as recommended by the educator preparation institution on Form TC-WL; and

(b) Valid for the world language and all grades listed on the face of the certificate.

(4) The temporary provisional certificate for world language shall be issued at the rank corresponding to the degree held by the teacher applicant in accordance with the requirements established in 16 KAR 8:020.

Section 6. Issuance of a Temporary Provisional Certificate for World Language. (1) Prior to seeking employment in a Kentucky public school, a candidate shall request from the institution written and dated documentation of eligibility for the university **based** alternative certification program to provide to school districts pursuant to KRS 160.345(2)(h).

(2) Prior to employment, a superintendent, on behalf of the employing local board of education, shall be responsible for requesting the temporary provisional certificate for world language.

(3) The candidate shall submit to the Education Professional Standards Board an official college transcript from each college or university attended.

(4) All transcripts from institutions outside of the United States shall be accompanied by a course-by-course evaluation from **the American Association of Collegiate Registrars and Admissions Officers or a member of NACES®** **[**~~an Education Professional Standards Board approved evaluation agency~~**]**.

(5) The employing school district shall submit with Form TC-WL a completed and signed copy of the mentoring collaboration agreement with the university **[-]**based alternative certification program **as required by[**~~referenced in~~**]** Section 4(1)(d) of this administrative regulation.

Section 7. Requirements for renewal of the temporary provisional certificate for world language. (1) A candidate shall be eligible for the first renewal of the temporary provisional certificate for world language upon successful completion of the following requirements:

(a) Evidence of employment in a Kentucky school district or nonpublic school in the content area or areas indicated on the initial provisional world language certificate;

(b) A minimum of six (6) semester hours or its equivalent from the approved preparation program; **and**

(c) Completion of Form TC-WL.

(2) A candidate shall be eligible for the final renewal of the temporary provisional certificate for world language upon successful completion of the following requirements:

(a) Evidence of employment in a Kentucky school district or nonpublic school in the content area or areas indicated on the initial provisional world language certificate;

(b) A minimum of six (6) semester hours or its equivalent from the approved preparation program;

(c) The required assessments as established in 16 KAR 6:010; and

(d) Completion of Form TC-WL.

Section 8. (1) Upon completion of all program requirements of the university **[-]**based alternative certification program for teachers of world languages, including successful completion of the Kentucky Teacher Internship Program established in KRS 161.030 and 16 KAR 7:010, the candidate may make application to the Education Professional Standards Board for the professional certificate on the form TC-1 which is incorporated by reference in 16 KAR 2:010.

(2) Upon verification that a candidate has met all eligibility requirements for certificate issuance, the Education Professional Standards Board shall issue a professional certificate.

Section 9. Incorporation by Reference. (1) "Application for World Language Temporary Provisional Certification**,**" Form TC-WL, September 2011**, is incorporated by reference**.

(2) This material may be inspected, copied, or obtained, subject to applicable copyright law, at the Education Professional Standards Board, 100 Airport Road, 3rd Floor, Frankfort, Kentucky 40601, Monday through Friday, 8 a.m. to 4:30 p.m.

LORRAINE WILLIAMS, Chairperson

APPROVED BY AGENCY: August 1, 2011

FILED WITH LRC: August 10, 2011 at 1 p.m.

CONTACT PERSON: Alicia A. Sneed, Director of Legal Services, Education Professional Standards Board, 100 Airport Road, Third Floor, Frankfort, Kentucky 40601, phone (502) 564-4606, fax (502) 564-7080.

PERSONNEL BOARD
(As Amended at ARRS, October 11, 2011)

101 KAR 1:375. Employee grievances and complaints.

RELATES TO: KRS 18A.075, 18A.0751**, 18A.095**

STATUTORY AUTHORITY: KRS **[**~~Chapter 13A,~~**]** 18A.0751

NECESSITY, FUNCTION, AND CONFORMITY: KRS 18A.075 **[**~~and 18A.0751~~**]** requires the Personnel Board to adopt comprehensive administrative regulations consistent with the provisions of KRS 18A.005 to 18A.200. **KRS 18A.0751(1)(i) requires the Personnel Board to promulgate an administrative regulation governing employee grievances and complaints. This administrative regulation establishes the requirements governing employee grievances and complaints.**

Section 1. **Definition. "Grievance" means[**~~Definitions; Grievance. A grievance is~~**]** a complaint filed by an employee which con-

cerns some aspect of his **or her** conditions of employment over which **the employee's[**~~his~~**]** cabinet or agency has control and which has occurred or of which the employee has become aware, through the exercise of due diligence, within thirty (30) days prior to filing.

Section 2. General Provisions. (1) An employee in the classified service who believes that he **or she** has been subjected to unfair or unjust treatment concerning **[**~~his~~**]** conditions of employment may file a grievance in accordance with this **administrative regulation[**~~procedure~~**]**.

(2) A grievance concerning an action which is appealable directly to the board pursuant to KRS 18A.095 may also be filed with the cabinet or agency. The filing of a grievance with the cabinet or agency shall not**:**

(a) Prohibit the employee from also filing an appeal with the board**;[**~~,~~**]** **[**~~or~~**]**

(b) Extend the statutory appeal period.

(3) An employee **[**~~utilizing this procedure~~**]** shall be entitled to file a grievance without interference, coercion, discrimination, or reprisal.

(4) An appointing authority shall inform its employees of the provisions of this administrative regulation, or any modifications in the levels of review that have been approved by the Personnel Board for the employee's cabinet or agency pursuant to Section **4(4)[**4~~(3)~~**]** of this administrative regulation. **[**~~(5) (a) The commissioner shall provide to the employees, through the appointing authorities, a grievance form to be used for the filing a grievance.~~

~~(b) "Grievance Form (Revised 8/11)][(Revised 12-01-92)]["~~ ~~is incorporated by reference.~~

~~(c) This form may be inspected, copied or obtained at the Personnel Board, 28 Fountain Place, Frankfort, Kentucky 40601, 8 a.m. to 4:30 p.m., Monday through Friday.~~**]**

Section 3. Procedures. (1) A grievance shall be filed **on a Grievance Form** with an employee's immediate supervisor within thirty (30) days following occurrence or the employee becoming aware, through the exercise of due diligence, of the action that is the subject of the grievance. If the action or conduct of the first line supervisor is the basis of an employee's grievance, the grievance may be filed with the second line supervisor.

(2) An employee shall state in writing the basis of **the[**~~his~~**]** grievance or complaint together with the corrective action desired. If an employee wishes to submit additional information or documentation, **the employee[**~~he~~**]** may attach it to the Grievance **Form**.

(3) If a grievance is filed that alleges discrimination on the basis of race, color, religion, national origin, sex, disability or age forty (40) or over, the recipient of this grievance shall immediately notify the cabinet or agency EEO coordinator to comply with the affirmative action plan.

(4) Interviews to evaluate or investigate the grievance outside of normal work hours with the grievant or other employees shall entitle them to compensatory time.

(5) Interviews to evaluate or investigate the grievance held with the grievant or other employees shall not require the use of leave time.

(6) Parties may have a representative present at each step of the grievance procedure.

Section 4. Grievance Levels. (1) Except as provided by Section 3(1) of this administrative regulation, the immediate supervisor shall, upon investigation, issue findings and a decision in writing to the employee within ten (10) [~~five (5)~~] work days after receipt of the grievance. If the responding supervisor is unable to resolve the complaint to the satisfaction of the employee, the employee may request review of the grievance within five (5) [~~two (2)~~] work days of receipt of the decision by the next appropriate level.

(2) The next line supervisors shall each have five (5) work days to respond to the grievance. The employee **shall have[**~~has~~**]** five (5) work days after each intermediate supervisory review to decide to appeal the grievance to the next level.

(3) [~~(2)~~] If the line supervisors are unable to resolve the grievance to the satisfaction of the employee, the employee may request review of the grievance within five (5) [~~two (2)~~] work days of receipt of the decision of the final line supervisor by the appointing authority for a final determination. The appointing authority, upon investigation, shall issue findings and a final determination in writing to the employee within twenty (20) [~~ten (10)~~] work days.

(4) [~~(3)~~] Unless the time limits have been extended by agreement of the parties, failure of supervisory or management personnel to respond within prescribed time limits shall automatically advance the grievance to the next review level.

(5) [~~(4)~~] An intermediate grievance level may be waived by written agreement of the parties.

Section 5. Incorporation by Reference. (1) "Grievance Form", October 2011, is incorporated by reference.

(2) This material may be inspected, copied, or obtained, subject to applicable copyright law, at the Personnel Board, 28 Fountain Place, Frankfort, Kentucky 40601, Monday through Friday, 8 a.m. to 4:30 p.m.

MARK A. SIPEK, Executive Director

APPROVED BY AGENCY: August 15, 2011

FILED WITH LRC: August 15, 2011 at 11 a.m.

CONTACT PERSON: Boyce A. Crocker, General Counsel, Personnel Board, 28 Fountain Place, Frankfort, Kentucky 40601, phone (502) 564-7830, fax (502) 564-1693.

PERSONNEL CABINET
(As Amended at ARRS, October 11, 2011)

101 KAR 2:046. Applications, qualifications and examinations.

RELATES TO: KRS 18A.030(2), 18A.032, 18A.110(1)(a), (7)(c), 18A.120, 18A.150

STATUTORY AUTHORITY: KRS 18A.030(2), 18A.110(1)(a), (7)(c)

NECESSITY, FUNCTION, AND CONFORMITY: KRS 18A.110(1)(a) and (7)(c) requires the Secretary of Personnel to promulgate administrative regulations which govern open competitive exams to determine the relative fitness of applicants and for the rejection of candidates or eligibles who fail to meet reasonable requirements of the secretary. This administrative regulation establishes the application and examination requirements.

Section 1. Notices of Examinations. (1) An examination for entrance to the classified service shall be conducted on an open-competitive basis.

(2) The recruitment program shall:

(a) Accept an Application for Employment; and

(b) Hold an examination whenever and wherever the secretary deems it to be in the best interests of the Merit System.

(3) Eligibles shall be listed in rank order upon certification of a register based on their highest valid scores.

(4) The public notice of examination required by KRS 18A.110(7)(c) shall specify:

(a) The title and minimum salary of the job classification;

(b) The minimum qualifications required;

(c) The opening date on which an application will be received for placement of the applicant on the register; and

(d) All other pertinent information and requirements.

Section 2. Minimum Qualifications for Filing Applications. An open-competitive examination shall be available to each applicant who meets the minimum requirements determined by the secretary with regard to:

(1) Education;

(2) Experience;

(3) Training;

(4) Licensure;

(5) Certification; or

(6) Other factors that relate to the ability of the candidate to perform the essential functions of the position with reasonable efficiency.

Section 3. Filing Applications. (1) An Application for Employment shall be electronically submitted.

(2) An application shall require information concerning:

(a) Personal characteristics;

(b) Education;

(c) Experience;

(d) References; and

(e) Other pertinent information.

(3) An application shall be signed by the applicant personally or by electronic means. The truth of the statements contained in the application shall be certified by the applicant's signature.

(4) An applicant shall:

(a) Meet the minimum qualifications established in the class specification as to education and experience; and

(b) Not be guaranteed a passing grade by admission to an examination.

(5) For a job classification for which there is to be continuous recruitment, a statement shall be included in the announcement to the effect that an application shall be received until further notice.

Section 4. Advance Examinations. (1) If an applicant does not meet the minimum requirements as to education at the time of application, but will meet these requirements as a result of the completion of currently scheduled educational work **[**~~in~~**]** within three (3) months following the date of receipt of the application, the applicant shall be allowed to take the examination.

(2) An applicant taking the examination under subsection (1) of this section shall be eligible to apply for a specific vacancy announcement up to thirty (30) calendar days prior to completing the educational requirements.

Section 5. Character of Examinations. An examination shall:

(1) Be practical in nature;

(2) Be constructed to reveal the capacity of the candidate for the particular job classification for which the applicant is competing;

(3) Consider the applicant's general background and related knowledge; and

(4) Be rated impartially.

Section 6. Conduct of Examinations. (1) An examination shall be conducted in as many places in the Commonwealth as are found convenient for applicants and practicable for administration.

(2) Reasonable accommodation in testing shall be provided upon timely request and receipt of verification of need.

(3) The secretary may:

(a) Designate monitors in various parts of the Commonwealth to conduct an examination under instructions prescribed by the secretary;

(b) Provide for the compensation of the monitors; and

(c) Make arrangements for the use of a public building in which to conduct an examination.

(4) Retest procedures.

(a) For open continuous testing, an applicant shall not:

1. Be admitted to the same exam or its alternate more than two (2) times within a regular workweek; or

2. Take the same exam or its alternate more than twelve (12) times in a twelve (12) month period beginning with the original date the test is taken.

Section 7. Rating Examinations. (1) The secretary shall determine the rating or standing of an applicant on the register for each examination at the time of certification of a register.

(2) The secretary shall determine the passing score of each examination.

(3) All applicants for the same job classification shall be accorded uniform and equal treatment in all phases of the examination procedure.

Section 8. Rating Education and Experience. (1) If the selection method is rating of education and experience, the secretary shall determine a procedure for the evaluation of the education and experience qualifications of an applicant.

(2) The formula used in appraisal shall give due regard to recentness and quality as well as quantity of experience and the pertinence of the education.

(3) The secretary shall investigate the candidate's educational documentation.

(4) The secretary shall investigate the candidate's work history.

(5) If the results of this investigation disclose information affecting the rating of education and experience, the secretary shall:

(a) Rate the candidate accordingly;

(b) Make the necessary revision of the rating; and

(c) Notify the candidate.

(6) The secretary shall determine the selection method for a qualifying job classification based upon the knowledge, skills, and abilities necessary for the classification.

(a) The secretary shall notify the Personnel Board of the classification and the minimum requirements for a qualifying selection method.

(b) The secretary shall maintain for public review a list of those classifications which are qualifying along with the minimum requirements for each classification.

Section 9. Notice of Examination Results. (1) Each applicant shall be notified of the examination score as soon as the rating of the examination has been completed.

(2) An eligible shall be entitled to information concerning his **or her** relative position on the register upon request and presentation of proper identification.

Section 10. Adjustment of Errors. (1) The secretary shall correct a clerical error in the rating of an examination, if the error is called to the attention of the secretary within thirty (30) days after receipt of the notice of examination results.

(2) A correction shall not invalidate a certification and appointment previously made.

Section 11. Examination Records. The secretary shall maintain all records pertinent to an application or examination for a period of three (3) years.

Section 12. Incorporation by Reference. (1) "Application for Employment", **October[**~~January~~**]** 2011 [~~Fall 2007~~], is incorporated by reference.

(2) This material may be inspected, copied, or obtained, subject to applicable copyright law, at the Personnel Cabinet, 501 High Street, Third Floor [~~200 Fair Oaks Lane, 5th Floor~~], Frankfort, Kentucky 40601, Monday through Friday, 8 a.m. to 4:30 p.m.

TIM LONGMEYER, Secretary

APPROVED BY AGENCY: August 12, 2011

FILED WITH LRC: August 12, 2011 at 3 p.m.

CONTACT PERSON: Dinah T. Bevington, Office of Legal Services, 501 High Street, 3rd Floor, Frankfort, Kentucky 40601, phone (502) 564-7430, fax (502) 564-0224.

PERSONNEL CABINET
(As Amended at ARRS, October 11, 2011)

101 KAR 2:056. Registers.

RELATES TO: KRS 18A.005, 18A.110(1)(f), (7)**,** 18A.120

STATUTORY AUTHORITY: KRS 18A.030(2), 18A.040, 18A.110(1)(f), (7)

NECESSITY, FUNCTION, AND CONFORMITY: KRS 18A.110(1)(f) and (7) requires the Secretary of Personnel to promulgate administrative regulations which govern the establishment of eligible lists for appointment and for the rejection of candidates or eligibles who do not meet reasonable selection requirements of the secretary. This administrative regulation establishes requirements for the state registers.

Section 1. Notification of Vacancies to Be Filed From a Register. An appointing authority shall notify the secretary as far in advance as possible of a vacancy in a full-time or part-time classified position to be filled from a register.

Section 2. Minimum Requirements. (1) The secretary shall review the qualifications of additional applicants who meet the minimum requirements and qualifications for a vacancy if there are insufficient applicants for the vacancy.

(2) The secretary shall, if appropriate, reevaluate an applicant's training and experience on the basis of the minimum **qualifications[**~~qualification~~**]** required for the job classification in which the vacancy exists.

Section 3. Duration of Registers. (1) A register which has become exhausted shall expire upon the administration of a superseding examination and the establishment of a register on the basis of that examination.

(2) If a new examination is established for a classification, the secretary shall send to each eligible remaining on the current register a notification prior to the administration of a superseding examination.

Section 4. Internal Mobility Program. The internal mobility program shall facilitate the movement of a qualified classified employee to a different position in the state personnel system.

(1) The secretary shall certify a full-time or part-time register which shall include:

(a) The names of eligibles for reemployment and appointment, in accordance with 101 KAR 2:066; and

(b) The names of interested employees with internal mobility full-time or internal mobility part-time status who:

1. Meet the minimum requirements;

2. Seek promotion, demotion, or transfer to a different position; and

3. Have applied for a posted vacancy.

(2) An employee with status interested in internal mobility shall:

(a) Submit an Application for Employment to the Personnel Cabinet; and

(b) Apply for placement on the register.

(3) An appointing authority may request a register consisting of exclusively internal mobility candidates for a time period specified by the appointing authority of at least ten (10) calendar days.

Section 5. Reemployment Registers. The secretary shall prepare a reemployment register, which:

(1) Shall contain the names of former employees, in rank order of seniority, who are exercising their reemployment rights; and

(2) May be combined with the list of current employees in the Internal Mobility Program for the classification.

Section 6. Full-time or Part-time Registers. The secretary shall certify a separate register for full-time and part-time positions.

Section 7. Number of Registers. A person meeting minimum qualifications for job classifications shall be eligible to apply for any posted vacancy.

Section 8. Incorporation by Reference. (1) **The** "Application for Employment", **October[**~~January~~**]** 2011 [~~Fall 2007~~], is incorporated by reference.

(2) This material may be inspected, copied, or obtained, subject to applicable copyright law, at the Personnel Cabinet, 501 High Street, Third Floor [~~200 Fair Oaks Lane, 5th Floor~~], Frankfort, Kentucky 40601, Monday through Friday, 8 a.m. to 4:30 p.m.

TIM LONGMEYER, Secretary

APPROVED BY AGENCY: August 12, 2011

FILED WITH LRC: August 12, 2011 at 3 p.m.

CONTACT PERSON: Dinah T. Bevington, Office of Legal Services, 501 High Street, 3rd Floor, Frankfort, Kentucky 40601, phone (502) 564-7430, fax (502) 564-0224.

PERSONNEL CABINET
(As Amended at ARRS, October 11, 2011)

101 KAR 2:105. Sick leave sharing procedures.

RELATES TO: KRS 18A.110(1)(h), (7)(g), 18A.196, 18A.197

STATUTORY AUTHORITY: KRS 18A.030(2), 18A.110(1)(h), (7)(g), 18A.197(9)

NECESSITY, FUNCTION, AND CONFORMITY: KRS 18A.197(9) requires the Secretary of Personnel to promulgate administrative regulations to implement the sick leave sharing program. This administrative regulation establishes the sick leave sharing procedures.

Section 1. Definitions. (1) "Employee" is defined by KRS 18A.196(1).

(2) "Immediate family" means:

(a) The employee's spouse, mother, father, grandparent, son or daughter; or

(b) A person of similarly close relationship:

1. Who has resided with the employee for at least thirty (30) days prior to application; or

2. For whom the employee is legally responsible.

(3) "Medically certified illness, injury, impairment**,** or physical or mental condition" means a disabling medical condition which has rendered or will render the employee completely incapable of performing the essential duties of his **or her** job due to:

(a) The employee's personal illness; or

(b) The medically certified necessity that the employee care for an eligible **immediate** family member.

Section 2. Eligibility to Donate or Receive Sick Leave. (1) An employee shall not qualify to donate or receive sick leave under the sick leave sharing program if the employee:

(a) Is not in active payroll status; or

(b) Has:

1. Resigned;

2. Retired; or

3. Been placed in unpaid leave status by a personnel action.

(2) To request donated sick leave **due to a medically certified illness, injury, impairment, or physical or mental condition of the employee or an eligible immediate family member**, an employee shall complete **a[**~~an Application for~~**]** Sick Leave Sharing **Application**.

(3) To donate sick leave, an employee shall complete a Sick Leave **Sharing** Donation Form.

Section 3. Procedures and Restrictions. (1) The ten (10) consecutive days of leave required for eligibility shall be leave with or without pay.

(2) Sick leave sharing shall not be authorized for mere convenience or employee preference.

(3) Sick leave shall not be donated in an amount less than seven and one-half (7.5) hours.

(4) If multiple donors donate sick leave to an eligible recipient, agencies shall transfer leave in chronological order of receipt of the donation forms, up to the maximum amount that has been certified to be needed by the recipient.

(5) The applicant for sick leave sharing shall be responsible for filing:

(a) The appropriate medical certificates certifying the medical necessity; and

(b) The **[**~~Application for~~**]** Sick Leave Sharing **Application**.

(6) Donated sick leave shall not be utilized retroactively except to cover the period between the date the request was submitted to the employee's supervisor or agency representative and the date of approval by the appointing authority.

(7) The sick leave sharing recipient shall be responsible for monitoring the amount of sick leave donated and used.

(8) Except as provided by subsection (9) of this section, donated sick leave shall be used:

(a) In the order in which it is donated; and

(b) On consecutive days.

(9) Leave that an employee accrues while receiving donated sick leave shall be used before donated sick leave.

(10) When the recipient of donated leave returns to work, unused donated leave shall be restored to the donors in reverse order of donation, unless the recipient provides medical evidence that continued, periodic medical treatment relating to the original condition for which leave was donated is required.

(11) If a sick leave donor resigns, retires**,** or is otherwise terminated from state employment before the process of transferring leave to the recipient has begun, the leave shall not be available for use by the recipient.

(12) An appointing authority may require a sick leave recipient to provide an updated medical certificate attesting to the continued need for leave after thirty (30) working days of sick leave.

(13) An employee receiving workers' compensation benefits shall be eligible to receive shared sick leave to maintain a regular level of pay.

Section 4. Incorporation by Reference. (1) The following material is incorporated by reference:

(a) "**[**~~Application for~~**]**Sick Leave Sharing **Application"**, March 2011 [~~September 1999~~]; and

(b) "Sick Leave Sharing Donation Form", March 2011. [~~Sick Leave Donation, September 1999.~~]

(2) This material may be inspected, copied, or obtained**,** subject to applicable copyright law, at the Personnel Cabinet, 501 High Street, Third Floor [~~200 Fair Oaks Lane, 5th Floor~~], Frankfort, Kentucky 40601, Monday through Friday, 8 a.m. to 4:30 p.m.

TIM LONGMEYER, Secretary

APPROVED BY AGENCY: August 12, 2011

FILED WITH LRC: August 12, 2011 at 3 p.m.

CONTACT PERSON: Dinah T. Bevington, Office of Legal Services, 501 High Street, 3rd Floor, Frankfort, Kentucky 40601, phone (502) 564-7430, fax (502) 564-0224.

PERSONNEL CABINET
(As Amended at ARRS, October 11, 2011)

101 KAR 2:106. Annual leave sharing procedures.

RELATES TO: KRS 18A.025(3)**(c)1.d**, 18A.203

STATUTORY AUTHORITY: KRS 18A.030(2)(b), 18A.110(1)(h), (2), 18A.203(9)

NECESSITY, FUNCTION, and CONFORMITY: KRS 18A.203(9) requires the Secretary of the Personnel Cabinet to promulgate procedural administrative regulations to implement the Annual Leave Sharing Program. This administrative regulation establishes the procedures for the Annual Leave Sharing Program established by KRS 18A.203.

Section 1. Definition. "Employee" is defined by KRS 18A.005(14).

Section 2. Eligibility to Donate or Receive Annual Leave. (1) An employee shall not qualify to donate or receive annual leave under the Annual Leave Sharing Program if the employee:

(a) Is not in active payroll status; or

(b) Has:

1. Resigned;

2. Retired; or

3. Been placed in unpaid leave status by a personnel action.

(2) To request donated annual leave, an employee shall complete an **[**~~Application for~~**]** Annual Leave Sharing **Application**.

(3) To donate annual leave, an employee shall complete an Annual Leave **Sharing** Donation Form.

Section 3. Procedures and Restrictions. (1) The ten (10) consecutive days of leave required for eligibility by KRS 18A.203 shall be leave with or without pay.

(2) The total amount of shared annual leave that may be received or used by an eligible employee for the purposes specified by this administrative regulation shall be limited to 200 work hours **per each qualifying event**.

(3) Annual leave sharing shall not be authorized for mere convenience or employee preference.

(4) Annual leave shall not be donated in an amount less than seven and one-half (7.5) hours.

(5) If multiple donors donate annual leave to an eligible recipient, agencies shall transfer leave in chronological order of receipt of the donation forms, up to the maximum amount that has been certified to be needed by the recipient or 200 work hours, whichever is less.

(6) The applicant for annual leave sharing shall be responsible for filing the **[**~~Application for~~**]** Annual Leave Sharing **Application**.

(7) Donated annual leave shall not be utilized retroactively except to cover the period between the date the request was submitted to the employee's supervisor or agency representative and the date of approval by the appointing authority.

(8) The annual leave sharing recipient shall be responsible for monitoring the amount of annual leave donated and used.

(9) Except as provided by subsection (10) of this section, donated annual leave shall be used:

(a) In the order in which it is donated; and

(b) On consecutive days.

(10) Any leave that an employee accrues while receiving donated annual leave shall be used before donated annual leave.

(11) When the recipient of donated leave returns to work, unused donated leave shall be restored to the donors in reverse order of donation, unless the recipient provides evidence that the original condition for which annual leave was donated will continue.

(12) If an annual leave donor resigns, retires**,** or is otherwise terminated from state employment before the process of transferring leave to the recipient has begun, the leave shall not be available for use by the recipient.

Section 4. Incorporation by Reference. (1) The following material is incorporated by reference:

(a) "**[**~~Application for~~**]** Annual Leave Sharing **Application", October[**~~, March~~**]** 2011[~~December 2000~~]; and

(b) Annual Leave Sharing Donation Form, **October[**~~March~~**]** 2011 [~~December 2000~~].

(2) This material may be inspected, copied, or obtained, subject to applicable copyright law, at the Personnel Cabinet, 501 High Street, Third Floor [~~200 Fair Oaks Lane, 5th Floor~~], Frankfort, Kentucky 40601, Monday through Friday, 8 a.m. to 4:30 p.m.

TIM LONGMEYER, Secretary

APPROVED BY AGENCY: August 12, 2011

FILED WITH LRC: August 12, 2011 at 3 p.m.

CONTACT PERSON: Dinah T. Bevington, Office of Legal Services, 501 High Street, 3rd Floor, Frankfort, Kentucky 40601, phone (502) 564-7430, fax (502) 564-0224.

GENERAL GOVERNMENT
Kentucky State Board of Licensure for Professional Engineers and Land Surveyors
(As Amended at ARRS, October 11, 2011)

201 KAR 18:192. Continuing professional development for professional land surveyors.

RELATES TO: KRS 322.290(15)

STATUTORY AUTHORITY: KRS 322.290(4), (15)

NECESSITY, FUNCTION, AND CONFORMITY: KRS 322.290(15) requires the board to adopt a program of continuing education for professional land surveyors. This administrative regulation implements the continuing professional development program mandated by KRS 322.290(15) for professional land surveyors.

Section 1. Definitions. (1) "Completion" means the professional land surveyor has satisfactorily met specific requirements of an offering by taking and passing a university course or attending a seminar **[**~~(e.g., passing a university course or attending a seminar)~~**]**.

(2) "Continuing professional development" **or "[**~~(~~**]**CPD" **[**~~)~~**]** means participation in activities, beyond the basic educational requirements, that**:[**~~;~~**]**

(a) Provide specific content planned and evaluated to improve the land surveyor's professional competence;

(b) Encourage acquisition of new skills and knowledge required to maintain competence;

(c) Strengthen the professional land surveyor's critical inquiry and balanced judgment;

(d) Raise the ethical standards within the professional community; and

(e) Which meet the requirements established by the provisions of this administrative regulation.

(3) "CPDC" means the Continuing Professional Development Committee.

(4) "Professional development hour" **or "**[~~(~~]PDH" [~~)~~] means not less than fifty (50) minutes of instruction or presentation that meets the requirements of this administrative regulation.

(5) "Provider" means a person, school, association, company, corporation**,** or group who has developed a CPD activity and participates directly in the presentation.

(6) "Sponsor" means a group, **organization, or[**~~such as a~~] professional society, offering activities by providers.

Section 2. Continuing Professional Development Committee. (1) The chair of the State Board of Licensure for Professional Engineers and Land Surveyors shall appoint a Continuing Professional Development Committee and name its chair.

(2) The CPDC shall consist of three (3) [~~four (4)~~] board of licensure members of which at least two (2) are professional land surveyors. [~~In addition, the Kentucky Association of Professional Surveyors and the Kentucky Society of Professional Engineers shall each appoint one (1) nonvoting member.~~]

(3) Work of the CPDC shall be considered work of the board and compensation shall be given as provided by KRS 322.270.

(4) The CPDC shall hold regular meetings and a record of its action shall be maintained.

(5) The CPDC shall have the authority to rule on all matters concerning continuing professional development for professional land surveyors. Decisions of the CPDC shall be ratified by the board. A licensee who disagrees with a decision of the CPDC may direct his or her concerns to the board for consideration at the board's next meeting.

Section 3. Program Structure. (1) Except as provided otherwise in this administrative regulation, a professional land surveyor shall complete and report to the board a minimum of eight (8) professional development hours for each calendar year.

(2) The requirement for professional development hours shall include a four (4) hour board sponsored course in standards of practice for professional land surveyors, professional ethics, and the code of professional practice and conduct, taken once every four (4) years. In the year that this course is taken, it shall count as four (4) of the required eight (8) hours.

(3) A maximum of four (4) hours in excess of the eight (8) professional development hours required to be earned in a calendar year may be carried forward to the next calendar year.

(4) Failure to earn the eight (8) professional development hours shall make the licensee ineligible for licensure renewal.

Section 4. Criteria for Professional Development. (1) Professional development hours may be earned by successful completion of the following activities subject to approval by the CPDC and board:

(a) College or university courses;

(b) Seminars;

(c) Tutorials;

(d) In-house programs sponsored by corporations or other organizations;

(e) Correspondence courses;

(f) Televised or videotaped courses with approved supervision;

(g) Distance learning courses with approved supervision;

(h) Teaching or instructing courses, programs, or items specified in this subsection. The credit may be claimed at twice the number of hours permitted participants;

(i) Making or attending approved presentations at technical or professional meetings; or

(j) Publication of papers, articles, or books related to the practice of land surveying.

(2) Activities described in subsection (1) of this section shall:

(a) Be relevant to the practice of land surveying;

(b) Contain technical, ethical, or managerial subjects;

(c) Be an organized program of learning, presented sequentially;

(d) Be conducted by individuals with education, training, or expertise acceptable to the CPDC;

(e) Be offered for the number of professional development hours approved by the CPDC; and

(f) Not include in-service training, orientation to specific institutional policies and practices, or time used to sell or advertise a product.

(3) CPD activities shall earn credit only when substantially different from a course for which credit was granted in the previous two (2) calendar years.

(4) Professional development hours shall be converted as follows:

(a) One (1) university semester hour shall equal fifteen (15) professional development hours.

(b) One (1) university quarter hour shall equal ten (10) professional development hours.

(c) One (1) continuing education unit shall equal ten (10) professional development hours.

(5) Unless stated otherwise in this administrative regulation, credit for courses shall be earned at the rate of one (1) professional development hour for each hour of instruction completed, if approved by the CPDC.

Section 5. Approval of a Continuing Professional Development Activity. Activity approvals may be granted for sponsors, providers, or individual professional land surveyors as follows:

(1) Approval of activities is valid for a specified approval period or until alteration of the activity is approved by the CPDC.

(2) Failure to notify the CPDC of a change in an activity may render approval of the activity null and void.

(3) Prior to approval, an activity shall not be advertised as approved for Kentucky professional land surveyors without a conspicuous notice that the activity has been "submitted for consideration."

(4) If prior approval is desired, a written request for approval of the activity shall be submitted to the CPDC on **the** "Continuing Professional Development Course Approval Form" at least sixty (60) days prior to presentation of the activity. All other requests for approval of an activity shall be submitted to the CPDC on a "Continuing Professional Development Course Approval Form" at least two (2) weeks before the CPDC meeting which considers the activity for approval.

(5) All requests for approval of an activity shall be accompanied by:

(a) A detailed outline and objectives;

(b) A time outline including registration, introductions, welcomes, breaks, and meals;

(c) Handouts or reference materials needed to evaluate the activity; and

(d) A resume for each instructor or speaker in the activity.

(6) The CPDC or board reserves the right to send a representative to monitor an activity:

(a) The provider or sponsor shall waive all fees for the CPDC or board representative; and

(b) Approval for the activity may be withdrawn for subsequent iterations of the activity, if significant variation is observed from the approved activity.

(7) An evaluation form shall be made available for participants at each presentation.

(8) An individual under disciplinary action from the board or a business entity with a principal who is under disciplinary action from the board shall be prohibited from presenting a CPD activity for credit without specific approval from the board.

(9) When a provider fails to obtain prior approval, a professional land surveyor may request credit for an activity by making a written request to the CPDC and including the items listed in subsection (5) of this section.

(10) Upon approval, an activity shall receive a CPD number which shall be used to identify the activity.

(11) If an activity is not approved by the CPDC, the requestor shall be sent notice of nonapproval within two (2) weeks of its deci-

sion. This decision shall be presented to the board at its next meeting for ratification.

Section 6. Exemptions and Extensions. The following professional land surveyors may be exempted from the requirements of this administrative regulation by submitting a written request to the CPDC with supporting documentation for the exemption:

(1) A professional land surveyor shall be exempted for the calendar year in which he or she is initially licensed by the board.

(2) A professional land surveyor who cannot satisfy the CPD requirement because of physical disability, illness, or other extenuating circumstance may be exempted for the calendar year in which the disability, illness, or extenuating circumstance occurs. The CPDC may grant an extension of time to fulfill the yearly CPD requirement for an extenuating circumstance.

(3) An exemption or extension request shall be made in writing for each calendar year and the exemption or extension is only valid for that calendar year.

Section 7. Reinstatement. Before a license is reinstated by the board, a former professional land surveyor shall earn the continuing professional development hours required for each year the license was revoked, suspended, or expired, up to a maximum of thirty-two (32) professional development hours.

Section 8. Reporting. (1) On the biennial renewal form, a professional land surveyor shall certify whether or not the requirements of this administrative regulation have been met.

(2) Biennial renewal forms received after September 1 shall be subject to the audit process in Section 9 of this administrative regulation.

Section 9. Audits. (1) Compliance with the annual CPD requirements shall be determined through an audit process.

(2) Professional land surveyors shall be audited through a random selection process or as the result of information provided to the board. (3) Individuals selected for audit shall provide the board with documentation of the CPD activities claimed for the renewal period. Appropriate documentation shall include:

(a) Verification records in the form of transcripts, completion certificates, or other documents supporting evidence of participation.

(b) Information regarding seminar or course content, instructors, and sponsoring organizations.

(4) Verification records and documentation for audit purposes shall be maintained by individual licensees for a period of three (3) years after completion of the CPD activity.

(5) If continuing professional development credit is disallowed, a professional land surveyor shall have 180 calendar days after notification to substantiate the original claim or earn other credit to meet the requirement.

(4) Failure to comply with the CPD requirements shall be considered a violation of KRS 322.180(3) subjecting the professional land surveyor to disciplinary action.

(5) An audit resulting in a determination of noncompliance shall subject the professional land surveyor to an automatic audit the next reporting period and each subsequent reporting period until a audit results in a determination of compliance.

(6) A professional land surveyor who is under investigation pursuant to KRS 322.190 may be subjected to the audit requirements of this section.

Section 10. Incorporation by Reference. (1) "Continuing Professional Development Course Approval Form", November 1999, State Board of Licensure for Professional Engineers and Land Surveyors is incorporated by reference.

(2) This material may be inspected, copied, or obtained, subject to applicable copyright law, at Kentucky State Board of Licensure for Professional Engineers and Land Surveyors, 160 Democrat Drive, Frankfort, Kentucky 40601, Monday through Friday, 8 a.m. to 4:30 p.m.

DAVID COX, Executive Director

APPROVED BY AGENCY: August 3, 2011

FILED WITH LRC: August 3, 2011 at 3 p.m.

CONTACT PERSON: Jonathan Buckley, General Counsel, Kentucky State Board of Licensure for Professional Engineers and Land Surveyors, 160 Democrat Drive, Frankfort, Kentucky 40601, phone (502) 573-2680, fax (502) 573-6687.

GENERAL GOVERNMENT
Board of Physical Therapy
(As Amended at ARRS, October 11, 2011)

201 KAR 22:020. Eligibility and credentialing procedure.

RELATES TO: KRS 164.772, 214.615(1), 327.050, 327.060, 327.070(2)(f), 327.080

STATUTORY AUTHORITY: KRS 327.040(1), (11), (13)

NECESSITY, FUNCTION, AND CONFORMITY: KRS 327.040(11) authorizes the Board of Physical Therapy to promulgate and enforce reasonable administrative regulations for the effectuation of the purposes of KRS Chapter 327. KRS 327.040(1) requires the board to determine if physical therapist applicants meet the qualifications and standards required by KRS Chapter 327, and 327.040(13) authorizes the board to promulgate administrative regulations regarding the qualifications for physical therapist assistants. This administrative regulation establishes the criteria for eligibility, methods, and procedures of qualifying for a credential to practice physical therapy in Kentucky.

Section 1. An application shall be accepted for credentialing as a physical therapist or physical therapist assistant based on successful completion by the applicant of one (1) of the following processes:

(1) Examination;

(2) Endorsement; or

(3) Reinstatement.

Section 2. Examination Candidate. (1) To be eligible for the examination, the applicant for licensure as a physical therapist shall:

(a) Have successfully completed the academic and clinical requirements of a physical therapy ~~or physical therapist assistant~~ program accredited by CAPTE;

(b) Submit certification of completion by the educational administrator of that program;

(c) Have completed an educational course at least two (2) hours in length that has been approved by the Cabinet for Health and Family Services (CHFS) [~~(CHS)~~] on the transmission, control, treatment, and prevention of human immunodeficiency virus infection and AIDS;

(d) Have successfully completed the Jurisprudence Exam;

(e) Submit a complete and notarized application for credentialing that includes a photo taken within one (1) year;

(f) Submit the correct, nonrefundable fee as required in 201 KAR 22:135;

(g) If applicable, submit on an Applicant Special Accommodations Request Form, a request for a reasonable accommodation in testing due to a documented disability; and

(h) Register for the NPTE examination.

(2) To be eligible for the examination, the applicant for certification as a physical therapist assistant shall:

(a) Have successfully completed the academic and clinical requirements of a physical therapy or physical therapist assistant program accredited by CAPTE;

(b) Complete the requirements of Section 2(1)(b) through (h) of this administrative regulation.

(3) After three (3) failed attempts in taking the examination, an applicant shall complete a board-approved remediation plan based on identified deficits as provided on the Federation of State Boards of Physical Therapy (FSBPT) Examination Performance Feedback report prior to registering for each subsequent examination.

(4) Effective July 1, 2012, after six failed attempts at either the physical therapist or physical therapist assistant examination, or combination thereof, in any jurisdiction, an applicant shall not be eligible to register for any additional examinations.

Section 3. An applicant for credentialing who is registered for the examination in another jurisdiction shall:

(1) Meet the eligibility requirements of Section 2 of this administrative regulation; and

(2) Register with the FSBPT Score Transfer Service to have results submitted to Kentucky.

Section 4. **A** physical therapist **applicant[**~~applicants~~**]** who **meets[**~~meet~~**]** the qualifications for physical therapy licensure by examination may become **a** special **candidate[**~~candidates~~**]** for physical therapist assistant certification by examination.

Section 5. To be eligible for credentialing by endorsement, the applicant shall:

(1) Have successfully completed the academic and clinical requirements of a physical therapy or physical therapist assistant program accredited by CAPTE;

(2) Meet the requirements established in Section 2(1)(b) through (f) [~~Section 2(1) (a) through (f)~~] of this administrative regulation;

(3) [~~(2)~~] Have successfully completed the NPTE or its equivalent, predecessor examination and register with the FSBPT Score Transfer Service to have results submitted to Kentucky.

(a) A passing score in Kentucky for the person who took the NPTE prior to July 1, 1993, shall be at least equal to the national average raw score minus one and five-tenths (1.5) standard deviation set equal to a converted score of seventy-five (75).

(b) After July 1, 1993, a passing score shall be the criterion referenced passing point recommended by the FSBPT set equal to a scaled score of 600;

(4) [~~(3)~~] Have an active credential in this profession in another jurisdiction; and

(5) [~~(3)~~] Have verification of credentials showing the credential has never been revoked, suspended, on probation, or under disciplinary review in another jurisdiction.

Section 6 [~~5~~]. To be eligible for reinstatement, the applicant shall meet the requirements in 201 KAR 22:040.

Section 7 [~~6~~]. A credential issued by the board shall be in effect until March 31 of the next uneven-numbered year.

Section 8 [~~7~~].A foreign-educated physical therapist shall comply with this administrative regulation and 201 KAR 22:070.

Section 9 [~~8~~].Incorporation by Reference.

(1) The following material is incorporated by reference:

(a) "Application for Credentialing", August 15, 2011 [~~August 2010~~]; and

(b) "Applicant Special Accommodations Request Form", February 2009.

(2) This material may be inspected, copied, or obtained, subject to applicable copyright law, at the Board of Physical Therapy, 312 Whittington Parkway Suite 102, Louisville, Kentucky 40222, Monday through Friday, 8 a.m. to 4:30 p.m.

REBECCA KLUSCH, Executive Director

APPROVED BY AGENCY: July 21, 2011

FILED WITH LRC: August 12, 2011 at 2 p.m.

CONTACT PERSON: Becky Klusch, Executive Director, Board of Physical Therapy, 312 Whittington Parkway, Suite 102, Louisville, Kentucky 40222, phone (502) 429-7140, fax (502) 429-7142.

GENERAL GOVERNMENT CABINET
Kentucky Board of Respiratory Care
(As Amended at ARRS, October 11, 2011)

201 KAR 29:050. Continuing education requirements.

RELATES TO: KRS 314A.115

STATUTORY AUTHORITY: KRS **314.115,** 314A.205(3)

NECESSITY, FUNCTION, AND CONFORMITY: KRS 314A.115 requires the submission of proof of continuing education in order to renew certification. This administrative regulation delineates the requirements for continuing education and prescribes methods and standards for the accreditation of continuing education courses.

Section 1. Definitions. (1) **"ARRC" means American Association for Respiratory Care.**

(2) "Academic courses" means courses offered by an accredited postsecondary institution including:

(a) A respiratory care course, designated by a respiratory care course number, beyond the premandatory certification level; and[~~(b) An academic course in the biological, psychological, sociological, or physical sciences relevant to patient care and is beyond the premandatory certificate level; or~~]

(b) [~~(c)~~] An academic course applicable to respiratory care practice and appropriate for the respiratory care practitioner employed in the areas of clinical practice, administration, education, or research.

(3)[~~(2)~~**]** "American Association for Respiratory Care [~~for Continuing Respiratory Care Education~~] **[**~~(AARC)~~**]** [~~(AARC-CRCE)~~] approval" **or "AARC approval"** means any offering having received recognition by this organization.

(4)[~~(3)~~**]** "Approved" means Kentucky Board of [~~for~~] Respiratory Care (KBRC) recognized.

(5)[~~(4)~~**]** "Continuing education unit" means sixty (60) contact minutes of participating in continuing education experiences.

(6)[~~(5)~~**]** "Offering" means an organized learning experience**:**

(a) Planned and evaluated to meet behavioral objectives**; and**

(b) [~~and may be~~**]** Presented in one (1) session or in a series. [~~(6) "Provider" means an organization approved by the Kentucky Board of Respiratory Care (KBRC) for offering continuing education programs.~~]

(7)[~~(6)~~**]**[~~(7)~~] "Relevant" means having content applicable to the practice of respiratory care.

(8)[~~(7)~~**]** "Sponsor" means an individual or organization, other than AARC, applying for approval of continuing education programs.

(9)[~~(8)~~**]** "Successful completion" means that the practitioner has**:**

(a) Satisfactorily met and can appropriately document the specific requirements of the offering**; and**

(b)[~~and~~**]** Earned the continuing education units.

Section 2. Accrual of Continuing Education Units Mandatory; Computation of Accrual. (1) A minimum of twenty-four (24) continuing education units shall be accrued by each person holding mandatory certification during the two (2) year certification period for renewal.

(2) The certification period shall be January 1 of one (1) year through December 31 of the following calendar year, regardless of when a mandatory certificate is issued.

(3) All units shall be in or relevant [~~related~~] to the field of respiratory care.

Section 3. Methods of Acquiring Continuing Education Units. Continuing education units applicable to the renewal of the mandatory certificate shall be directly relevant [~~related~~] to the professional growth and development of the respiratory care practitioner. Units may be earned by completing any of the following educational activities: [~~(1) Offerings having American Association for Respiratory Care (AARC) - Continuing Respiratory Care Education (CRCE) approval (including traditional and nontraditional);~~]

(1)[~~(2)~~](a) Academic courses as defined in Section 1 of this administrative regulation; and [~~(b) General education courses, either electives or designated to meet degree requirements, shall not be acceptable; and~~]

(b) [~~(c)~~] Academic credit equivalency for continuing education units shall be based on one (1) credit hour = fifteen (15) continuing education units;

(2) Continuing education units approved by AARC;

(3) Continuing education units offered by other organizations or institutions approved by the Board **in accordance with this administrative regulation**; or[~~(3) Offerings provided by the Committee on Accreditation for Respiratory Care (CoARC) or its equivalent~~

~~accredited educational programs;~~

~~(4) Relevant offerings provided by:~~

~~(a) American Thoracic Society (ATS) and American Lung Association (ALA);~~

~~(b) Kentucky Board of Nursing (KBN);~~

~~(c) American Heart Association (AHA);~~

~~(d) American Medical Association (AMA);~~

~~(e) American Cancer Society; or~~

~~(f) Other organizations or institutions approved by the KBRC.~~]

(4) [~~(5)~~] Scientific and educational lectures, workshops, or seminars presented by a [~~the~~] person holding a mandatory certificate [~~certification~~].

(a) A maximum of double [~~one-half (1/2) of~~] the continuing education units offered may be credited for scientific and educational lectures, workshops, or seminars presented by the certificate holder.

(b) Credit shall not be issued for repeated instruction of the same course**.[**~~;~~**]**[~~(6) Related areas not specifically a part of the field of respiratory care may be approved for up to two (2) continuing education units if the board believes that those related areas may serve to enhance the certificate holder's ability to practice; or~~

~~(7) Presenters of nonacademic offerings may earn full continuing education credit for each contact hour of instruction, not to exceed one-half (1/2) of the continuing education renewal requirements. Credit shall not be issued for repeated instruction of same course.~~]

Section 4. Procedure[~~s~~] for Preapproval [~~Accreditation~~] of Sponsors [~~and Approval of Continuing Education Activities~~]. (1) A sponsor [~~Any entity~~] desiring approval [~~to establish accreditation~~] of a continuing education offering prior to attendance shall apply for approval to the board at least forty-five (45) [~~seventy-five (75)~~] [~~forty-five (45~~)] days in advance of the date [~~commencement~~] of the offering, on the Application for Continuing Education Approval [~~Process~~] stating the type of learning activity, the subject matter, the date and time of the program, and the names and qualifications of the instructors. [~~, and the number of continuing education units offered.~~] A continuing education activity shall be approved [~~qualified for approval~~] if the board determines that the activity being presented:

(a) [~~(1)~~] Is an organized program of learning;

(b) [~~(2)~~] Pertains to subject matters which are integrally relevant [~~relate~~] to the practice of respiratory care;

(c) [~~(3)~~] Contributes to the professional competency of the licensee; and

(d) [~~(4)~~] Is conducted by individuals who have educational training, or experience acceptable to the board.

(2) A nonrefundable and one-time fee of ten (10) dollars shall be charged for each continuing education offering**.[**~~; and~~**]**

(3) An approved continuing education offering shall expire two (2) years from the date of approval**.[**~~; and~~**]**

(4) A continuing education offering shall be approved in increments of no less than thirty minutes**.[**~~; and~~**]**

(5) Product based continuing education offerings shall be approved for a maximum of up to two (2) continuing education units per product**.**[~~during each certification period~~]**[**~~; and~~**]**

(6) The Board may choose not to approve a sponsor's offerings if the Board finds the sponsor engaged in fraud, deceit, or misrepresentations concerning any continuing education offerings.

Section 5. Procedure for Postapproval of an Individual Holding a Mandatory Certificate [~~Individuals~~]. (1) An individual holding a mandatory certificate desiring **postapproval[**~~approval~~**]** of a continuing education offering **shall,** within ninety (90) days after the date the continuing education program is conducted**, [**~~shall~~**]** submit an Application for Continuing Education Approval stating the type of learning activity, the subject matter, the date and time of the program, and the names and qualifications of the instructors. A continuing education activity shall be **postapproved[**~~approved~~**]** if the board determines that the activity **[**~~being~~**]** presented:

(a) **Was[**~~Is~~**]** an organized program of learning;

(b) **Pertained[**~~Pertains~~**]** to subject matters which are integrally relevant [~~relate~~] to the practice of respiratory care;

(c) **Contributed[**~~Contributes~~**]** to the professional competency of the licensee; and

(d) **Was[**~~Is~~**]** conducted by individuals who have educational training, or experience acceptable to the board.

(2) An approved continuing education offering shall expire two (2) years from the date of approval**.[**~~; and~~**]**

(3) A continuing education offering shall be approved in increments of no less than thirty (30) minutes**.[**~~; and~~**]**

(4) Product based continuing education offerings shall be approved for a maximum of up to two continuing education units per product**.** [~~during each certification period~~]**[**~~; and~~**]**

(5) The Board may choose not to approve an individual's offerings if the Board finds the individual engaged in fraud, deceit, or misrepresentations concerning any continuing education offerings.

Section 6. All continuing education units and academic courses shall be preapproved or postapproved for credit.

(1) If a continuing education unit is approved by ARRC, it shall be considered preapproved.

(2) An academic course shall be postapproved upon completion of the course.

Section 7 [~~5~~]. Responsibilities and Reporting Requirements of Certificate Holders. A certificate holder shall be responsible for obtaining required continuing education units. The certificate holder shall identify his or her own continuing education needs, take the initiative in seeking continuing professional education activities to meet these needs, and seek ways to integrate new knowledge, skills**,** and attitudes. Each person holding mandatory certification shall:

(1) Select approved activities by which to earn continuing education units; and [~~(2) Obtain from the board prior approval for continuing education activities not accredited by the board;~~]

(2) [~~(3)~~] Maintain all documentation verifying successful completion of continuing education units for a period of three (3) years from conclusion of the certification period in which the continuing education unit was obtained. [~~records of continuing education units.~~

~~(a) Each person holding mandatory certification shall maintain, for a period of three (3) years, all documentation verifying successful completion of continuing education units.~~

~~(b) During each certification renewal period, up to fifteen (15) percent of all certificate holders shall be required by the board to furnish documentation of the completion of the appropriate number of continuing education units for the current renewal period.~~

~~(c) Verification of continuing education units is not otherwise reported to the board;~~

~~(4)(a) Document attendance and participation in a continuing education activity in the form of official documents including:~~

~~1. Transcripts;~~

~~2. Certificates;~~

~~3. Affidavits signed by instructors;~~

~~4. Receipts for fees paid to the sponsor; or~~

~~5. Less formal evidence including written summaries of experiences that are not otherwise formally or officially documented in any way.~~

~~(b) The type of documentation required may vary depending on the specific activity submitted to the board for approval; and~~]

Section 8. Audit Procedures. (1) In January following the certification period, the Board shall audit a minimum of fifteen (15) percent of certificate holders who were designated to complete continuing education by December 31 of the preceding year**.[**~~;~~**]**

(2) Each certificate holder **chosen for an audit** shall **[**~~be required by the board to~~**]** furnish documentation of completion of continuing education units for the certification period. **[**~~(3)~~**]** Documentation shall include:

(a) Official transcripts for completed academic courses;

(b) A copy of the program showing an individual as a presenter of scientific and educational lectures, workshops**,** or seminars;

(c) Official verification from an official Registrar for academic .courses taught; **or**

(d) Completion certificates or cards, including a course number, for relevant offerings whether preapproved or postapproved.

(3) Each certificate holder chosen for an audit shall also

submit a Continuing Education Audit Verification Form. It **[**~~Section 9.~~**]** [~~(5)~~] [~~Fully comply with the provisions of this administrative regulation.~~] **[**~~Audit verification~~**]** shall be submitted before March 1 of the year following the certification period.

(4) Failure to fully comply with the provisions of this administrative regulation shall constitute unprofessional conduct as set forth in KRS 314A.225 and may result in the refusal to renew, suspension, or revocation of the certification.

Section **9[**~~10~~**]** [~~6~~]. Temporary Certificate Holders; Limited Mandatory Certificate Holders. Continuing education requirements shall not apply to the holders of a temporary certificate or a limited mandatory certificate.

[~~Section 11~~**]** [~~7~~]**[**~~. Audit verification~~**]** [~~Continuing education units~~] **[**~~shall be reported on the Audit Continuing Education Unit Verification Form~~**]** [~~Application for Renewal~~]**[**~~.~~**]**

Section **10[**~~12~~**]** [~~8~~]. Incorporation by Reference. (1) The following material is incorporated by reference:

(a) "Application for Continuing Education Approval [~~Process~~]", 6/11 [~~5/06~~] **[**~~edition~~**]**; [~~and~~]

(b) "Continuing Education Audit Verification Form" [~~"Application for Renewal"~~], 6/11 [~~5/06~~] **[**~~edition~~**]**; and[~~.~~]

(c) "Application for Renewal", 8/11.

(2) This material may be inspected, copied, or obtained, subject to applicable copyright law, at the Kentucky Respiratory Care Board, Traditional Bank Bldg, 163 W Short St., Ste 350, Lexington Kentucky 40507, [~~Spindletop Administration Building, 2624 Research Park Drive, Suite 306, Lexington, Kentucky 40511~~], Monday through Friday, 8 a.m. to 4:30 p.m.

TAMARA G. MCDANIEL, Chair

APPROVED BY AGENCY: September 13, 2011

FILED WITH LRC: September 13, 2011 at 11 a.m.

CONTACT PERSON: Peggy Lacy-Moore, Executive Director, Kentucky Board of Respiratory Care, Traditional Bank Bldg., 163 W. Short St., Suite 350, Lexington, Kentucky 40507, phone (859) 246-2747, fax (859) 246-2750.

GENERAL GOVERNMENT CABINET
Kentucky Applied Behavior Analyst Licensing Board
(As Amended at ARRS, October 11, 2011)

201 KAR 43:010. Application procedures for licensure[~~Licensed Behavior Analyst or Licensed Assistant Behavior Analyst: application procedures~~].

RELATES TO: KRS 319C.080(1)**,** **[**~~and~~**]** (2)

STATUTORY AUTHORITY: KRS 319C.060(2)**(a)**

NECESSITY, FUNCTION, AND CONFORMITY: KRS 319C.060(2)(a) requires the board to promulgate administrative regulations establishing the requirements for an applicant for licensure as a behavior analyst or assistant behavior analyst. This administrative regulation establishes the requirements for applicants for licensure.

Section 1. Application **Procedures**. (1) An application for a license as a behavior analyst or assistant behavior analyst may be submitted after the requirements established in KRS 319C.080(1) and (2) are met.

(2) The application required by **subsection[**~~section~~**]** (1) of this section shall be made by submitting a completed **Form ABA-001, Application for Licensure,[**~~"Application Form-1"~~**]** to the board. The application shall:

(a) Include a certification by the applicant that the:

1. Information in the application is true, correct, and complete to the best of his or her knowledge and belief; and

2. Applicant is aware that the board may take disciplinary action **in accordance with KRS 319C.070** if the application contains a misrepresentation or falsification; and

(b) Include[~~3.~~**]** an official transcript for all levels of education required for licensure.

Section 2. **Licensure of Behavior Analysts.** The applicant for licensure as a behavior analyst shall:

(1) Submit a check or money order payable to the Kentucky State Treasurer for the application fee as required by 201 KAR 43:030**;**

(2) Submit proof of compliance with the educational, examination, and credentialing requirements established in KRS 319C.080(1); and

(3) Submit proof of completion of at least five (5) hours of training in:

(a) Adult abuse and neglect prevention; and

(b) Child abuse, neglect, and dependency prevention[~~(2) Have received a masters or doctoral degree from a regionally accredited educational institution; provided, however, the board may grant a license to an individual otherwise qualified under this administrative regulation who has received a masters or doctoral degree from an educational institution outside the United States, which at the time the applicant was enrolled and at the time the applicant graduated, maintained a standard of training equivalent to the standards of training of those institutions regionally accredited in the United States; and~~

~~(3) Has passed the Board Certified Behavior Analyst (BCBA)® examination, and;~~

~~(4) Is credentialed and has active status at the time of the application as a behavior analyst by the Behavior Analyst Certification Board, and;~~

~~(5) Submits proof of completion of a board approved training in reporting abuse, neglect and exploitation which meets the requirements of KRS Chapter 209 or any successor course requirements~~**]**.

Section 3. **Licensure of Assistant Behavior Analysts.** The applicant for licensure as an assistant behavior analyst shall:

(1) Submit a check or money order payable to the Kentucky State Treasurer for the application fee as required by 201 KAR 43:030;

(2) **Submit proof of compliance with the educational, examination, and credentialing requirements established in KRS 319C.080(2); and**

(3) Submit proof of completion of at least five (5) hours of training in:

(a) Adult abuse and neglect prevention; and

(b) Child abuse, neglect, and dependency prevention[~~Have received a bachelor's, masters, or doctoral degree from a regionally accredited educational institution; provided, however, the board may grant a license to an individual otherwise qualified under this administrative regulation who has received a bachelor's, masters, or doctoral degree from an educational institution outside the United States, which at the time the applicant was enrolled and at the time the applicant graduated, maintained a standard of training equivalent to the standards of training of those institutions regionally accredited in the United States; and~~

~~(3) Has passed the Board Certified Assistant Behavior Analyst (BCaBA)® examination, and;~~

~~(4) Is credentialed and has active status at the time of the application as an Assistant Behavior Analyst by the Behavior Analyst Certification Board, and;~~

~~(5) Submits proof of completion of a board approved training in reporting abuse, neglect and exploitation which meets the requirements of KRS Chapter 209 or any successor course requirements~~**]**.

Section 4. Incorporation by Reference. (1) **Form ABA-001, "Application for Licensure", October[**~~"Application Form-Behavior Analyst or Assistant Behavior Analyst", January~~**]** 2011 edition, is incorporated by reference.

(2) This material may be inspected, copied, or obtained, subject to applicable copyright law, at the Kentucky Applied Behavior Analysis Licensing Board, 911 Leawood Drive, Frankfort, Kentucky 40601, Monday through Friday, 8 a.m. to 4:30 p.m.

MARY M. "SHELLI" DESKINS, Ph.D., Vice-Chair

APPROVED BY AGENCY: March 21, 2011

FILED WITH LRC: April 29, 2011 at 4 p.m.

CONTACT PERSON: Lindsey Lane, Board Administrator, Division of Occupations and Professions, 911 Leawood Drive, Frankfort, Kentucky 40602, phone (502) 564-3296, fax (502) 564-4818.

GENERAL GOVERNMENT CABINET
Kentucky Applied Behavior Analysis Licensing Board
(As Amended at ARRS, October 11, 2011)

201 KAR 43:020. Application procedures for temporary licensure[~~Temporary Licensed Behavior Analyst or Temporary Licensed Assistant Behavior Analyst: application procedures~~].

RELATES TO: KRS 319C.080(3)

STATUTORY AUTHORITY: KRS 319C.060(2)**(a)**

NECESSITY, FUNCTION, AND CONFORMITY: KRS 319C.060(2)(a) requires the board to promulgate administrative regulations establishing the requirements for an applicant for temporary licensure as a behavior analyst or **[**~~temporary licensure as an~~**]** assistant behavior analyst. This administrative regulation establishes the requirements for applicants for temporary licensure.

Section 1. Application **procedures**. (1) An application for a temporary license as a behavior analyst **[**~~or temporary license as an~~**]** assistant behavior analyst may be submitted after the requirements established in KRS 319C.080**(3)[**~~(1) and (2)~~**]** are met.

(2) The application required by **subsection[**~~section~~**]** (1) of this section shall be made by submitting a completed **Form ABA-001, Application for Licensure,[**~~"Application Form-Temporary Licensed Behavior Analyst or Temporary Licensed Assistant Behavior Analyst"~~**]** to the board.

(a) The application shall**[**~~:~~

~~(a)~~**]** include a certification by the applicant that the:

1. Information in the application is true, correct, and complete to the best of his or her knowledge and belief; **[**~~and~~**]**

2. Applicant is aware that the board may take disciplinary action **in accordance with KRS 319C.070** if the application contains a misrepresentation or falsification; and

3. Applicant is aware that the temporary license shall expire two (2) years from the issuance date and **shall[**~~may~~**]** not be renewed.

(b) If **the** applicant has completed the coursework through a **BCAB-approved[**~~BACB-approved~~**]** program, the application shall include an original, certified post-secondary transcript.

(c) If **the** applicant has completed coursework from a **non-BCAB-approved[**~~non-BACB-approved~~**]** program, the application shall include an official post-secondary transcript and course syllabi for all behavior-analytic coursework showing that the applicant has met the coursework requirements for a Board Certified Behavior Analyst® or Board Certified Assistant Behavior Analyst®.

Section 2. **Temporary Licensure of Behavior Analysts.** The applicant for temporary licensure as a behavior analyst shall:

(1) Submit a check or money order payable to the Kentucky State Treasurer for the application fee as required by 201 KAR 43:030**;**

(2) Submit proof of compliance with the requirements established in KRS 319C.080(3); and

(3) Submit proof of completion of at least five (5) hours of training in:

(a) Adult abuse and neglect prevention; and

(b) Child abuse, neglect, and dependency prevention.**[**~~(2) Have received a masters or doctoral degree from a regionally accredited educational institution; provided, however, the board may grant a license to an individual otherwise qualified under this administrative regulation who has received a masters or doctoral degree from an educational institution outside the United States, which at the time the applicant was enrolled and at the time the applicant graduated, maintained a standard of training equivalent to the standards of training of those institutions regionally accredited in the United States; and~~

~~(3) Submits proof of completion of a board approved training in reporting abuse, neglect and exploitation which meets the requirements of KRS Chapter 209 or any successor course requirements.~~**]**

Section 3. **Temporary Licensure of Assistant Behavior Analysts.** The applicant for temporary licensure as an assistant behavior analyst shall:

(1) Submit a check or money order payable to the Kentucky State Treasurer for the application fee as required by 201 KAR 43:030;

(2) **Submit proof of compliance with the requirements established in KRS 319C.080(3); and**

(3) Submit proof of completion of at least five (5) hours of training in:

(a) Adult abuse and neglect prevention; and

(b) Child abuse, neglect, and dependency prevention[~~Have received a bachelor's, masters, or doctoral degree from a regionally accredited educational institution; provided, however, the board may grant a license to an individual otherwise qualified under this administrative regulation who has received a bachelor's, masters, or doctoral degree from an educational institution outside the United States, which at the time the applicant was enrolled and at the time the applicant graduated, maintained a standard of training equivalent to the standards of training of those institutions regionally accredited in the United States; and~~

~~(3) Submits proof of completion of a board approved training in reporting abuse, neglect and exploitation which meets the requirements of KRS Chapter 209 or any successor course requirements~~**]**.

Section 4. Incorporation by Reference. (1) **Form ABA-001, "Application for Licensure", October 2011 edition,[**~~"Application Form- Temporary Behavior Analyst or Temporary Assistant Behavior Analyst", (January 2011 edition)~~**]**, is incorporated by reference.

(2) This material may be inspected, copied, or obtained, subject to applicable copyright law, at the Kentucky Applied Behavior Analysis Licensing Board, 911 Leawood Drive, Frankfort, Kentucky 40601, Monday through Friday, 8 a.m. to 4:30 p.m.

MARY M. "SHELLI" DESKINS, Ph.D., Vice-Chair

APPROVED BY AGENCY: March 21, 2011

FILED WITH LRC: April 29, 2011 at 4 p.m.

CONTACT PERSON: Lindsey Lane, Board Administrator, Division of Occupations and Professions, 911 Leawood Drive, Frankfort, Kentucky 40602, phone (502) 564-3296, fax (502) 564-4818.

GENERAL GOVERNMENT CABINET
Kentucky Applied Behavior Analysis Licensing Board
(As Amended at ARRS, October 11, 2011)

201 KAR 43:030. Fees.

RELATES TO: KRS 319C.060(2)(f)**, 319C.080(1), (2), (3)[**~~; KRS 319C080(1) (3)~~**]**

STATUTORY AUTHORITY: KRS 319C.060(2)(f)

NECESSITY, FUNCTION, AND CONFORMITY: KRS 319C.060(2)(f) requires the board to promulgate administrative regulations establishing reasonable fees for the licensure and license renewal of behavior analysts, assistant behavior analysts, and temporary licensees. This administrative regulation establishes those fees.

Section 1. Application and licensure fees for licensed behavior analysts.

(1) An applicant for licensure as a licensed behavior analyst shall pay the following:

(a) A $100 nonrefundable application review fee**; and[**~~, and;~~**]**

(b) A $300 licensure fee for the first two (2) year licensure period.

(2) The licensure renewal fee for each subsequent, two (2) year licensure period shall be $300.

Section 2. Application and Licensure Fees for Licensed Assistant Behavior Analysts.

(1) An applicant for licensure as a licensed assistant behavior analyst shall pay the following:

(a) A $100 nonrefundable application review fee**; and[**~~, and;~~**]**

(b) A $200 licensure fee for the first two (2) year licensure period.

(2)The licensure renewal fee for each subsequent, two (2) year licensure period shall be $200.

Section 3. Application and Temporary Licensure Fees **[**~~for Temporarily Licensed Behavior Analysts~~**]**.

(1) An applicant for a temporary license as a behavior analyst shall pay the following:

(a) A $100 nonrefundable application review fee**; and[**~~, and;~~**]**

(b) A $200 temporary licensure fee for the two (2) year temporary licensure period.

(2) An applicant for a temporary license as an assistant behavior analyst shall pay the following:

(a) A $100 nonrefundable application review fee; and

(b) A $100 temporary licensure fee for the two (2) year temporary licensure period.

Section 4. Fees for Late Renewal or Reinstatement of a Licensed Behavior Analyst and Licensed Assistant Behavior Analyst.

(1) A licensed behavior analyst or a licensed assistant behavior analyst who files to renew his or her license after its renewal date but within thirty (30) days of that renewal date shall pay a late fee of $50 in addition to the fee set forth in Section 1 or 2 of this administrative regulation.

(2) A licensed behavior analyst or a licensed assistant behavior analyst who files to reinstate his or her license more than thirty (30) days after its renewal date but within one (1) year of that renewal date shall pay a reinstatement fee of $250 in addition to the fee set forth in Section 1 or 2 of this administrative regulation.

MARY M. "SHELLI" DESKINS, Ph.D., Vice-Chair

APPROVED BY AGENCY: March 21, 2011

FILED WITH LRC: April 29, 2011 at 4 p.m.

CONTACT PERSON: Lindsey Lane, Board Administrator, Division of Occupations and Professions, 911 Leawood Drive, Frankfort, Kentucky 40602, phone (502) 564-3296, fax (502) 564-4818.

GENERAL GOVERNMENT CABINET
Kentucky Applied Behavior Analysis Licensing Board
(As Amended at ARRS, October 11, 2011)

201 KAR 43:040. Code of ethical standards and standards of practice.

RELATES TO: KRS 319C.060(1), **(2)(c)** **[**~~319C.060(2)(c)~~**]**

STATUTORY AUTHORITY: KRS 319C.060(2)(c)

NECESSITY, FUNCTION, AND CONFORMITY: KRS 319C.060(2)(c) **requires[**~~require~~**]** the board to adopt a code of ethical standards and standards of practice for all licensed behavior analysts, assistant behavior analysts, and temporary licensees. This administrative regulation **establishes[**~~is established to protect and safeguard the health and safety of the citizens of Kentucky and to provide~~**]** the code of ethical standards and standards of practice **for licensees**.

Section 1. Definitions. (1) "Behavior analyst" means a person **was licensed[**~~credentialed~~**]** under KRS Chapter 319C **as a licensed behavior analyst, a licensed assistant behavior analyst, or a temporary licensee**.

(2) "Client" means a person who meets the requirements established in Section 2 of this administrative regulation.

(3) "Confidential information" means information revealed by a client or clients or otherwise obtained by a behavior analyst in a professional relationship**.**

(4) "Court order" means the written or oral communication of a member of the judiciary, or other court magistrate or administrator, if the authority has been lawfully delegated to the magistrate or administrator.

(5) "Professional relationship" means a mutually agreed upon relationship between a behavior analyst and a client for the purpose of the client obtaining the behavior analyst's professional expertise.

(6) "Professional service" means all actions of the behavior analyst in the context of a professional relationship with a client.

(7) "Supervisee" means a person who functions under the extended authority of the behavior analyst to provide behavioral services.

Section 2. Client Requirements. (1) Identification of a client. A client shall be a person who receives:

(a) An evaluation, assessment, or professional services;

(b) Other professional services for the purpose of practicing applied behavior analysis or applied behavior analysis interventions; or

(c) Consultation regarding applied behavior analysis or applied behavior analysis interventions in the context of a professional relationship.

(2) A corporate entity or other organization shall be considered the client if the professional contract is to provide a professional service of benefit to the corporate entity or organization.

(3) A legal guardian of a minor or legally incompetent adult shall be considered the client for a decision-making **purpose[**~~purposes~~**]**.

(4) A person identified as a client pursuant to subsections **(1) to (3)[**~~(1) (3)~~**]** of this section shall be deemed to continue to be a client for a period of two (2) years following the last date of service rendered to the person.

Section 3. Competence. (1) Limits on practice. The behavior analyst shall limit practice and supervision to the areas of competence in which proficiency has been gained through education, training, and experience.

(2) Maintaining competency. The behavior analyst shall maintain current competency in the areas in which he or she practices, through continuing education, consultation, or other procedures, in conformance with current standards of scientific and professional knowledge.

(3) Adding new services and techniques. The behavior analyst, if developing competency in a service or technique that is new either to the behavior analyst or new to the profession, shall engage in ongoing consultation with other behavior **analysts[**~~analyst~~**]** or relevant professionals and shall obtain appropriate education and training. The behavior analyst shall inform a client of the innovative nature and the known risks associated with the service, so that the client can exercise freedom of choice concerning the service.

(4) Referral. The behavior analyst shall make or recommend **a** referral to other professional, technical, or administrative resources if a referral is clearly in the best interests of the client.

(5) Sufficient professional information. A behavior analyst rendering a formal professional opinion in a report, letter, or testimony about a person shall not do so without direct and substantial professional contact with or a formal assessment of that person.

(6) Maintenance and retention of records.

(a) The behavior analyst rendering professional services to an individual client, or services billed to a third-party payor, shall maintain professional records that include:

1. The presenting problem, purpose**,** or diagnosis from another mental health professional;

2. The fee arrangement;

3. The date and substance of each professional contact or service;

4. Test results or other evaluative results obtained and the basic test data from which the results were derived;

5. Notation and results of a formal consult with another provider; and

6. A copy of all test or other evaluative reports prepared as part

of the professional relationship.

(b) The behavior analyst shall ensure that all records are maintained for a period of not less than six (6) years after the last date that services were rendered.

(c) The behavior analyst shall store and dispose of written, electronic and other records in a manner which shall ensure their confidentiality.

(d) For each person supervised pursuant to KRS Chapter 319C, the behavior analyst shall maintain for a period of not less than six (6) years after the last date of supervision a record of each supervisory session that shall include the type, place, date, and general content of the session.

(7) Continuity of care. The behavior analyst shall make arrangements for another appropriate professional or professionals to provide for an emergency need of a client, as appropriate, during a period of his or her foreseeable absence from professional availability.

Section 4. Impaired Objectivity and Dual Relationships. (1) Impaired behavior analyst.

(a) The behavior analyst shall not undertake or continue a professional relationship with a client if the objectivity or competency of the behavior analyst is impaired due to a mental, emotional, physiologic, pharmacologic, or substance abuse condition.

(b) If an impairment develops after a professional relationship has been initiated, the behavior analyst shall:

1. Terminate the relationship in an appropriate manner;

2. Notify the client in writing of the termination; and

3. Assist the client in obtaining services from another professional.

(2) Prohibited dual relationships.

(a) The behavior analyst shall not undertake or continue a professional relationship with a client, or the client's parent or legal guardian, if the objectivity or competency of the behavior analyst is impaired because of the behavior analyst's present or previous familial, social, sexual, emotional, financial, supervisory, administrative, or legal relationship with the client or a relevant person associated with or related to the client.

(b) The behavior analyst, in interacting with a client, **or** the client's parent or legal guardian, shall not:

1. Engage in verbal or physical behavior toward the client, or the client's parent or legal guardian, which is sexually seductive, demeaning, or harassing;

2. Engage in sexual intercourse or other physical intimacy with the client or the client's parent or legal guardian; or

3. Enter into a potentially exploitative relationship with the client, or the client's parent or legal guardian.

(c) The prohibitions established in paragraph (b) of this subsection shall extend indefinitely if the client is clearly vulnerable, by reason of emotional or cognitive disorder, to exploitative influence by the behavior analyst.

Section 5. Client Welfare. (1) Providing explanation of procedures. The behavior analyst shall give a truthful, understandable, and appropriate account of the client's condition to the client or to those responsible for the care of the client. The behavior analyst shall keep the client fully informed as to the purpose and nature of an evaluation, treatment, or other procedure, and of the client's right to freedom of choice regarding services provided.

(2) Termination of services.

(a) If professional services are terminated, the behavior analyst shall offer to assist the client in obtaining services from another professional.

(b) The behavior analyst shall:

1. Terminate a professional relationship if the client is not benefiting from the services; and

2. Prepare the client appropriately for the termination.

(3) Stereotyping. The behavior analyst shall not impose on the client a stereotype of behavior, values, or roles related to age, gender, religion, race, disability, nationality, sexual preference, or diagnosis which would interfere with the objective provision of professional services to the client.

(4) Solicitation of business by clients. The behavior analyst providing services to an individual client shall not induce that client, or the client's parent or legal guardian, to solicit business on behalf of the behavior analyst.

(5) Referrals on request. The behavior analyst providing services to a client shall make an appropriate referral of the client to another professional if requested to do so by the client.

Section 6. Welfare of Supervisees and Research Subjects. (1) Welfare of supervisees. The behavior analyst shall not exploit a supervisee.

(2) Welfare of research subjects. The behavior analyst shall respect the dignity and protect the welfare of his or her research subjects, and shall comply with all relevant statutes and administrative regulations concerning treatment of research subjects.

Section 7. Protecting the Confidentiality of Clients. (1) General. The behavior analyst shall safeguard the confidential information obtained in the course of practice, teaching, research, or other professional services. Except as provided in this section, the behavior analyst shall obtain the informed written consent of the client prior to disclosing confidential information.

(2) Disclosure without informed written consent. The behavior analyst shall disclose confidential information without the informed consent of the client if the behavior analyst has a duty to warn an intended victim of the client's threat of violence pursuant to KRS 202A.400 or 645.270.

(3) Disclosure if the client is a corporation or other organization. If the client is a corporation or other organization, the requirements for confidentiality established in this section shall:

(a) Apply to information that pertains to:

1. The corporation or organization; or

2. An individual, including personal information, if the information is obtained in the proper course of the contract; and

(b) Not apply to personal information concerning an individual if the individual had a reasonable expectation that the information was:

1. Obtained in a separate professional relationship between the behavior analyst and the individual; and

2. Subject to the confidentiality requirements established in this section.

(4) Services involving more than one (1) interested party. If more than one (1) party has an appropriate interest in the professional services rendered by the behavior analyst to a client or clients, the behavior analyst shall clarify to all parties prior to rendering the services the dimensions of confidentiality and professional responsibility that shall pertain in the rendering of services.

(5) Multiple clients. If service is rendered to more than one (1) client during a joint session, the behavior analyst shall**,** at the beginning of the professional relationship**,** clarify to all parties the manner in which confidentiality shall be handled.

(6) Legally dependent clients. At the beginning of a professional relationship**,** the behavior analyst shall inform a client who is below the age of majority or who has a legal guardian**[,]** of the limit the law imposes on the right of confidentiality with respect to his or her communications with the behavior analyst.

(7) Limited access to client records. The behavior analyst shall limit access to client records to preserve their confidentiality and shall ensure that all persons working under the behavior analyst's authority comply with the requirements for confidentiality of client material.

(8) Release of confidential information. The behavior analyst shall release confidential information upon court order or to conform with state law, including KRS 422.317, or federal law or regulation.

(9) Reporting of abuse of children and vulnerable adults. The behavior analyst shall be familiar with the relevant law concerning the reporting of abuse of children and vulnerable adults, and shall comply with those laws, including KRS 620.030.

(10) Discussion of client information among professionals. If rendering professional services as part of a team or if interacting with other appropriate professionals concerning the welfare of the client, the behavior analyst may share confidential information about the client if the behavior analyst takes reasonable steps to ensure that all persons receiving the information are informed about the confidential nature of the information and abide by the

rules of confidentiality.

(11) Disguising confidential information. If case reports or other confidential information is used as the basis of teaching, research, or other published reports, the behavior analyst shall exercise reasonable care to ensure that the reported material is appropriately disguised to prevent client identification.

(12) Observation and electronic recording. The behavior analyst shall ensure that diagnostic interviews or therapeutic sessions with a client are observed or electronically recorded only with the informed written consent of the client.

(13) Confidentiality after termination of professional relationship. The behavior analyst shall continue to treat as confidential information regarding a client after the professional relationship between the behavior analyst and the client has ceased.

Section 8. Representation of Services. (1) Display of credentials. The behavior analyst shall display his or her current credential to practice on the premises of his or her professional office.

(2) Misrepresentation of qualifications. The behavior analyst shall not misrepresent directly or by implication his or her professional qualifications such as education, experience, or areas of competence.

(3) Misrepresentation of affiliations. The behavior analyst shall not misrepresent directly or by implication his or her affiliations, or the purposes or characteristics of institutions and organizations with which the behavior analyst is associated.

(4) False or misleading information. The behavior analyst shall not include false or misleading information in a public statement concerning professional services offered.

(5) Misrepresentation of services or products. The behavior analyst shall not associate with or permit his or her name to be used in connection with a service or product in a way which misrepresents:

(a) The service or product;

(b) The degree of his or her responsibility for the service or product; or

(c) The nature of his or her association with the service or product.

(6) Correction of misrepresentation by others. The behavior analyst shall correct others who misrepresent the behavior analyst's professional qualifications or affiliations.

Section 9. Disclosure of Cost of Services. The behavior analyst shall not mislead or withhold from a client, prospective client, or third party payor, information about the cost of his or her professional services.

Section 10. Assessment Procedures. (1) Confidential information. The behavior analyst shall treat as confidential assessment results or interpretations regarding an individual.

(2) Protection of integrity of assessment procedures. The behavior analyst shall not disseminate a test in a way that may invalidate it.

(3) Information for professional users. The behavior analyst offering an assessment procedure or automated interpretation service to another professional shall**:**

(a) Accompany this offering by a manual or other printed material which describes the development of the assessment procedure or service, the rationale, evidence of validity and reliability, and characteristics of the normative population**;**

(b) [~~. The behavior analyst shall~~**]** State the purpose and application for which the procedure is recommended and identify special qualifications required to administer and interpret it properly**;** and

(c)[~~. The behavior analyst shall~~**]** Ensure that advertisements for the assessment procedure or interpretive service are factual.

Section 11. **[**~~Aiding Illegal Practice. (1)~~**]** Delegating professional responsibility. The behavior analyst shall not delegate professional responsibilities to a person not appropriately credentialed or otherwise appropriately qualified to provide professional services. **[**~~(2) Providing supervision. The behavior analyst shall exercise appropriate supervision over a supervisee.~~**]**

MARY M. "SHELLI" DESKINS, Ph.D., Vice-Chair

APPROVED BY AGENCY: March 21, 2011

FILED WITH LRC: April 29, 2011 at 4 p.m.

CONTACT PERSON: Lindsey Lane, Board Administrator, Division of Occupations and Professions, 911 Leawood Drive, Frankfort, Kentucky 40602, phone (502) 564-3296, fax (502) 564-4818.

GENERAL GOVERNMENT
Department of Agriculture
Division of Agriculture Marketing
(As Amended at ARRS, October 11, 2011)

302 KAR 45:010. Ginseng[~~, general provisions~~**].**

RELATES TO: KRS **246.030,** 246.650, 246.660, 246.990(9), **260.020, 260.030,** 50 C.F.R. Part **23[**~~23.51~~**]**

STATUTORY AUTHORITY: KRS 246.660**, 260.020**

NECESSITY, FUNCTION, AND CONFORMITY: KRS 246.660 requires the Department of Agriculture to **administer a program for ginseng in Kentucky. This administrative regulation establishes the ginseng program including licensing and record keeping requirements for dealers, a limited harvesting season, certification procedures, administrative violations and civil penalties, and procedures for the suspension or revocation of a dealer's license.[**~~promulgate administrative regulations relating to the administration of a program for American Ginseng. This administrative regulation establishes general provisions which apply in this chapter with regard to definitions, harvest season, and cooperative agreements.~~**]**

Section 1. Definitions. **(1) "Artificially Propagated" means ginseng grown from seeds or rootlets that:**

(a)1. Are exempt from the provisions of the Convention on International Trade in Endangered Species of Wild Fauna and Flora (CITES) as implemented by 50 C.F.R. Part 23; or

2. Were derived from cultivated parental stock; and

(b) Were woodsgrown or cultivated.

(2) "Certified ginseng" means ginseng that has been issued an American Ginseng Export Certificate by the department or other governmental certifying organization.

(3) "Cultivated" means ginseng grown under artificial shade and in tilled soil.

(4) "Dealer" means any person or agent of an entity buying ginseng for resale or export.

(5) "Department" means the Kentucky Department of Agriculture.

(6) "Dry ginseng" means ginseng roots that have been dried to remove moisture.

(7) "Export" means to transport, ship, carry, haul, take, or otherwise move ginseng collected in Kentucky outside of Kentucky.

(8) "Ginseng" is defined by KRS 246.650(2).

(9) "Green ginseng" means ginseng roots retaining moisture, not dried.

(10) "Harvest" is defined by KRS 246.650(1).

(11) "Purchase" means to take possession of ginseng in exchange for cash, cash equivalents, or barter.

(12) "Sell" means to transfer possession of ginseng to another person or entity in exchange for cash, cash equivalents, or barter.

(13) "Uncertified ginseng" means ginseng that has been harvested, but has not been issued a certificate for export.

(14) "Wild" means:

(a) Ginseng grown with minimal interference by humans, and under natural canopy in forest or woodlands; or

(b) Mature ginseng plants if they are derived from seeds of wild ginseng that were planted as required by Section 4(3) of this administrative regulation.

(15) "Wild Simulated" means ginseng grown:

(a) From seed that was not planted as required by Section 4(3) of this administrative regulation;

(b) With minimal interference by humans; and

(c) Under natural canopy.

(16) "Woodsgrown" means ginseng which was:

(a) Grown under natural canopy; and

(b) Purposefully managed.[~~(1) "Ginseng" means American ginseng (Panax quinquefolius)~~

~~(a) "Artificially Propagated" means grown from seeds or rootlets that are either exempt from the provisions of the Convention on International Trade in Endangered Species of Wild Fauna and Flora (CITES) or have been derived from cultivated parental stock, and grown as either~~

~~(1) "Woodsgrown" means grown under natural canopy and has been purposefully managed or~~

~~(2) "Cultivated" means grown under artificial shade and in tilled soil.~~

~~(b) "Wild Simulated" means ginseng grown from seed not as required in Section 3 of this administrative regulation, with minimal interference by humans, under natural canopy.~~

~~(c) "Wild" means growing with minimal inference by humans, under natural canopy in forest or woodlands. If seeds of wild ginseng are planted as required by Section 3 of this administrative regulation, those mature plants shall be considered wild.~~

~~(2) "Dealer" means any person or agent of an entity buying ginseng for resale or export.~~

~~(3) "Certified ginseng" means ginseng that has been issued an American Ginseng Export Certificate by the department or other governmental certifying organization.~~

~~(4) "Uncertified ginseng" means ginseng that has been harvested, but has not been issued a certificate for export.~~

~~(5) "Harvest" means to take any part of the ginseng plant while the plant is living.~~

~~(6) "Purchase" means to take possession of ginseng in exchange for cash, cash equivalents, or barter.~~

~~(7) "Sell" means to transfer possession of ginseng to another person or entity in exchange for cash, cash equivalents, or barter.~~

~~(8) "Department" means the Kentucky Department of Agriculture.~~

~~(9) "Green ginseng" means ginseng roots retaining moisture, not dried.~~

~~(10) "Dry ginseng" means ginseng roots that have been dried to remove moisture.~~

~~(11) "Export" means to transport, ship, carry, haul, take or otherwise move ginseng collected in Kentucky outside of Kentucky.~~**]**

Section 2. Dealer License Requirements. **A[**~~No~~**]** person shall **not** purchase uncertified ginseng for resale or export unless **he possesses[**~~they possess~~**]** a ginseng **dealer's[**~~dealers~~**]** license.

(1) Annual application. All persons or agents of entities purchasing uncertified ginseng in any amount at any time shall **[**~~be required to~~**]** file a complete **Ginseng Dealer Application[**~~application~~**]** for a ginseng **dealer's[**~~dealers~~**]** license.

(2) Fee. An annual fee of seventy-five (75) dollars for Kentucky residents or $150 for non-residents shall be submitted to the department prior to issuance of a ginseng **dealer's[**~~dealers~~**]** license. Residency **shall[**~~will~~**]** be determined by the state of issuance of a driver's license or other government issued identification.

(3) Licensing Period. **A ginseng dealer's[**~~The Ginseng Dealer~~**]** license shall be valid from September 1 until August 31 of the following calendar year. The department shall not issue a license if an applicant has outstanding penalties due under Section **9[**~~(9)~~**]** of this **administrative** regulation.

Section 3. Record Keeping. (1) Purchase **[**~~and sale~~**]** of ginseng. Ginseng dealers shall document all purchases **[**~~and sales~~**]** of ginseng on **a Ginseng Purchase Form. The form shall be legible, shall be completed in its[**~~forms to be provided by the Department. The forms shall be legible and completed in their~~**]** entirety by the dealer, other than the seller's signature or mark, in the presence of the seller**,** and **shall** include:

(a) Printed name, signature**,** or mark and address of the seller;

(b) Month purchased;

(c) Month harvested;

(d) County where harvested;

(e) Weight of purchase or sale; **and**

(f) Designation of ginseng as cultivated, woodsgrown, wild, or wild simulated and whether dried or green at the time of the transaction**.[**~~; and~~**]**

(2) Records of sales between dealers. **(a) A ginseng dealer purchasing uncertified ginseng from another dealer shall:**

1. Complete a Dealer to Dealer Transaction Form to document the purchase; and

2. Obtain from the other dealer Ginseng Purchase Forms completed by the dealer of origin.

(b) The Dealer to Dealer Transaction Form shall include:[~~Ginseng dealers purchasing ginseng from other dealers shall complete a Dealer to Dealer Transaction Form to document the purchase and submit the documents to Department along with the Ginseng Purchase Form obtained from the dealer of origin. The form for sales between dealers shall include:~~**]**

1.[~~(a)~~**]** The month of purchase from a dealer;

2.[~~(b)~~**]** The weight of the ginseng purchased at the time of the transaction;

3.[~~(c)~~**]** The signature and registration number of the dealer from whom the purchase is made; **[**~~and~~**]**

4.[~~(d)~~**]** The designation of ginseng as **cultivated, woodsgrown[**~~artificially propagated~~**]**, wild, or wild simulated and whether dried or green at the time of the transaction**; and**

5. The form identification numbers from the Ginseng Purchase Forms. **[**~~(3) Dealers shall record identification numbers from the Purchase Record Form used to export certified ginseng from the state.~~

~~(4) It is unlawful for anyone to include false information on any certificate or form required to be completed or maintained by this section.~~

~~(5) It is unlawful to sell or purchase ginseng without accurately documenting the information required in subsection (1) of this section on a Ginseng Purchase Form.~~

~~(6) Ginseng shall not be certified until the purchase forms are filed with the department.~~**]**

(3)[~~(7)~~**]** Retention. A person required to maintain records under this section shall retain the forms for a period of three (3) years from the end of that year's growing season.

(4)[~~(8)~~**]** Availability. Records required to be maintained under this section shall be made available to the department upon request.

Section 4. Harvest. (1) Ginseng shall only be harvested between September 1 and December 1 of each year.

(2) **Ginseng shall not be harvested[**~~It is unlawful to harvest ginseng~~**]** which is less than five (5) years old or has less than three (3) five (5) leafed prongs.

(3) Seeds adhering to a plant taken during the season shall be planted within fifty (50) feet of the location of the plant with no tool used other than the finger.

Section 5. Sale of Ginseng. (1) Uncertified **green** ginseng may only be sold **from[**~~between~~**]** September 1 **of each year until March 31 of the following year.**

(2) Uncertified dry ginseng may only be sold from September 15[~~for green ginseng and September 15 for dry ginseng~~**]** of each year until March 31 of the following year.

(3)[~~(2)~~**]** Ginseng dealers may obtain American Ginseng Export Certificates from **the** department during the ginseng selling season.

(4)[~~(3)~~**]** A ginseng dealer may sell certified ginseng at any time.

Section 6. Unsold Ginseng. (1) Uncertified ginseng not sold by March 31 of the year after harvest shall be **documented by the dealer. It shall be:**

(a) Weighed, and issued a weight receipt by the department; or

(b) Certified in accordance with Section 7 of this administrative regulation.[~~weighed and issued a weight receipt, or reported on an export certificate.~~**]**

(2) **A ginseng dealer shall not possess:**

(a) Undocumented green ginseng from April 1 through August 31; or

(b) Undocumented dry ginseng from April 1 through Sep-

tember 14.[~~Possession of undocumented ginseng (documented by either an export certificate or a weight receipt) by a ginseng dealer, is unlawful from April 1 to September 14.~~**]**

(3) Uncertified weighed ginseng shall not be sold until the following **season's[**~~season~~**]** selling period.

Section 7. Certification of Ginseng. (1) **Before ginseng harvested in Kentucky can be exported, it shall be certified by the department on an American Ginseng Export Certificate.**

(2) Ginseng may only be certified by a dealer holding a Kentucky dealer's license.

(3) To obtain certification, a dealer shall:

(a) File with the department an American Ginseng Export Certificate form;

(b) File with the department associated purchase forms covering the amount of ginseng to be certified in accordance with subsection (5) of this section;

(c) Undergo a random sample inspection of ginseng roots by a department official; and

(d) Pay the certification fee in accordance with subsection (7) of this section.

(4) Export Certificate. The certificate shall include the following information:

(a) State of origin;

(b) Serial number of certificate;

(c) Dealer's state license number;

(d) Dealer's shipment number for the harvest season;

(e) Year of harvest;

(f) Designation as dried or green ginseng;

(g) Designation as cultivated, woodsgrown, wild, or wild simulated;

(h) Weight of ginseng;

(i) Statement of state or tribal certifying official that the ginseng was obtained in that state or on those tribal lands in accordance with all relevant laws for that harvest year; and

(j) Name and title of state or tribal certifying official.

(5) Associated Purchase Forms. (a) For ginseng purchased from harvesters, the dealer shall file Ginseng Purchase Forms covering the amount of ginseng to be certified.

(b) For ginseng purchased from other dealers, the dealer shall file Dealer to Dealer Transaction Forms and Ginseng Purchase Forms obtained from the dealers of origin covering the amount of ginseng to be certified.

(c) Ginseng Purchase Forms shall be submitted to the department by April 15 of the year after harvest.

(6) The department may obtain samples of roots in order to obtain a root count.

(7) Certification fee. The fee for certification and processing by the department shall be two (2) dollars per pound. Payment shall be made prior to the release of the certification of the ginseng to the dealer, and shall be tendered by check or money orders only. Cash shall not be accepted.

(8) A copy of the certificate shall be:

(a) Enclosed with the shipment which is the subject of the certification;

(b) Retained for a minimum of three (3) years by the licensed ginseng dealer; and

(c) Retained by the certifying agent of the department for seven (7) years.[~~Ginseng dealers holding Kentucky Ginseng Dealer's License shall obtain an American Ginseng Export Certificate issued by the department after filing of associated purchase forms and undergoing random sample inspection of roots by an official of the department.~~

~~(2).The certificate shall include the following information:~~

~~(a) State of origin;~~

~~(b) Serial number of certificate;~~

~~(c) Dealer's state license number;~~

~~(d) Dealer's shipment number for the harvest season;~~

~~(e) Year of harvest;~~

~~(f) Designation as dried or green ginseng;~~

~~(g) Designation as cultivated, woodsgrown, wild or wild simulated;~~

~~(h) Weight of ginseng;~~

~~(i) Statement of state or tribal certifying official that the ginseng was obtained in that state or on those tribal lands in accordance with all relevant laws for that harvest year; and~~

~~(j) Name and title of state or tribal certifying official.~~

~~(3) A copy of certification shall be enclosed with the shipment subject of the certification. A copy of a certificate shall be retained for a minimum of three (3) years by the licensed ginseng dealer and a copy of the certificate shall be retained by the certifying agent of the department for seven (7) years.~~

~~(4) At the time of issuance of the certificate, the department official shall receive from the ginseng dealer copies of all Ginseng Purchase Forms covering the amount of ginseng certified. The Ginseng Purchase Form for ginseng purchased from other dealers and accompanying Dealer to Dealer forms shall be submitted the department prior to a certificate being issued.~~

~~(5) The fee for certification and processing by the department shall be two (2) dollars per pound. Payment shall be made prior to the release of the certification of the ginseng to the dealer, and shall be tendered by check or money orders only. Cash shall not be accepted.~~

~~(6) The department may obtain samples of roots in order to obtain a root count.~~**]**

Section 8. Prohibition on Uncertified Non-Kentucky Grown Ginseng. Ginseng that is harvested outside the border of Kentucky and not certified in its state of origin shall not **[**~~be allowed to~~**]** enter Kentucky.

Section 9. Violations and Penalties. (1) The following acts shall be considered a violation of this administrative regulation, and **each violation** shall carry **a civil[**~~an administrative~~**]** penalty of $100 to $1,000 dollars:

(a) Harvesting ginseng out of season;

(b) Selling uncertified ginseng out of season;

(c) Possessing underage ginseng;

(d) Seed collection, not relocating within fifty (50) feet of parent;

(e) Purchasing uncertified ginseng out of season;

(f) Falsification of **a Ginseng Dealer Application, a Ginseng Purchase Form, a Dealer to Dealer Transaction Form, or an American Ginseng Export Certificate;**

(g) A dealer purchasing ginseng from a harvester without accurately documenting the purchase on a Ginseng Purchase Form in accordance with Section 3(1) of this administrative regulation;

(h) A dealer purchasing uncertified ginseng from another dealer without:

1. Accurately documenting the purchase on a Dealer to Dealer Transaction Form in accordance with Section 3(2) of this administrative regulation; or

2. Obtaining from the other dealer Ginseng Purchase Forms completed by the dealer of origin;[~~records, applications or contents thereof; and~~**]**

(i)[~~(g)~~**]** Reselling or exporting ginseng without a **dealer's** license**;[**~~.~~**]**

(j)[~~(h)~~**] A dealer failing[**~~Failure of dealers~~**]** to certify or obtain weight receipt of ginseng at the end of the uncertified ginseng selling season**;[**~~.~~**]**

(k)[~~(i)~~**]** Transporting or exporting of uncertified ginseng in or out of Kentucky**; and**

(l)[~~(j)~~**]** Possession of **undocumented[**~~uncertified~~**]** ginseng by a ginseng dealer **out of season[**~~between April 1 and September 14~~**]**.

(2) Persons who commit the same violation within thirty (30) days of being cited for the first violation shall be assessed up to double the civil penalty accessed in Section 9(1) of this administrative regulation, not to exceed $1,000.

(3) Persons who commit a third same violation within sixty (60) days of being cited for the first violation shall be assessed up to triple the civil penalty accessed in Section 9(1) of this administrative regulation, not to exceed $1,000.

(4) This section shall not prohibit the department from suspending or revoking a license or certificate at any time in accordance with **Section 10 of this administrative regulation.**

(5) A person cited with a violation may contest the violation by requesting a hearing in writing within ten (10) days of

receiving the notice of violation. The hearing shall be conducted in accordance with KRS Chapter 13B.[~~KRS 246.650.~~]

Section 10. Ginseng Dealer License Suspension or Revocation. (1) A ginseng dealer **may contest a proposed license suspension or revocation by requesting a hearing in writing within ten (10) days of receiving the notice of suspension or revocation.**[~~shall have ten (10) days upon the receipt of the notification of a proposed suspension or revocation to request a hearing.~~] The hearing shall be conducted in accordance with KRS Chapter 13B.

(2) If a hearing is not requested as provided for in subsection (1) of this section, the department may suspend or revoke the license once the ten (10) day hearing request filing period has passed.

(3) The department may suspend a license for up to one calendar year, or revoke a [~~dealer~~] license after the provisions of **subsections (1) and (2) of this**[~~part one (1) and two (2) of the~~] section have been satisfied.

Section **11**[~~12~~]. Incorporation by Reference. (1) The following material is incorporated by reference:

(a) "Ginseng Dealer Application", [(~~Revised~~] 7/13/2011[~~)~~];

(b) "American Ginseng Export Certificate", [(~~Revised~~] 7/13/2011[~~)~~];

(c) "Dealer to Dealer Transaction Form", [(~~Revised~~] 7/13/2011[~~)~~]; and

(d) "Ginseng Purchase Form", [(~~Revised~~] 7/13/2011[~~)~~].

(2) These materials may be inspected, copied, or obtained, subject to applicable copyright law, at the Kentucky Department of Agriculture, Division of Value-Added Foods, 100 Fair Oaks, Suite 252, Frankfort, Kentucky 40601, Monday through Friday, 8 a.m. to 4:30 p.m. [~~Section 1. Definitions. (1) "Ginseng dealer" means a person engaged in the business of buying ginseng roots from ginseng collectors, ginseng cultivators, and other ginseng dealers for resale to ginseng exporters or to other ginseng dealers or any person who sells ginseng in a form in interstate commerce.~~

~~(2) "Commissioner" is defined at KRS 246.010(2).~~

~~(3) "Department" is defined at KRS 246.010(2).~~

~~(4) "State" means the Commonwealth of Kentucky.~~

~~Section 2. Registration. (1) A person shall complete a "Kentucky Ginseng Dealer Application" and return it to the Department prior to June 30 of each year.~~

~~(2) An applicant for renewal of a certificate of registration shall meet the department's recordkeeping and reporting requirements.~~

~~(3) Certificates of registration shall be issued for a period of one (1) year and shall expire on April 30 of each year.~~

~~Section 3. Recordkeeping. (1)(a) Purchase and sale of ginseng. Ginseng dealers shall keep records on forms furnished by the department of purchases and sales of ginseng. The records shall include:~~

~~1. Month purchased;~~

~~2. Month dug;~~

~~3. County where dug;~~

~~4. Weight of purchase; and~~

~~5. Signature and address of digger or seller.~~

~~(b) Records of sales between dealers. Ginseng dealers shall keep records of purchases from other dealers. Records of sales between dealers shall include:~~

~~1. The month of purchase from a dealer;~~

~~2. The weight of the ginseng purchase; and~~

~~3. The signature and registration number of the dealer from whom the purchase is made.~~

~~(c) All purchase records shall be submitted to the department on a monthly basis.~~

~~(d) No ginseng shall be certified until the purchase records are recorded by the department.~~

~~(2) Retention. A person required to maintain records under this section shall retain the records for a period of three (3) years.~~

~~(3) Availability. Records required under this section shall be made available to the department upon request.~~

~~Section 4. Annual Report. A ginseng dealer shall file an annual report with the department by April 30th. The annual report shall include the listing of each purchase and sale of ginseng made by the dealer since July 1 the previous year.~~

~~Section 5. Reporting Ginseng Originating Outside of Kentucky. A ginseng dealer shall file a report with the department at least every calendar-year quarter if the dealer has any commerce in ginseng originating from any state other than Kentucky. The report shall be sent within fifteen (15) days of the end of any calendar-year quarter and shall list each purchase and sale of out-of-state ginseng made by the dealer during that quarter.~~

~~Section 6. Harvest Season. Beginning September 1, 1988 and each year thereafter, wild ginseng shall only be dug between August 15 and December 1of each year. Seeds adhering to a plant taken during the season shall be planted within fifty (50) feet of the location of the plant with no tool used other than the finger. Ginseng growers will not longer be able to harvest the ginseng until it is five (5) years old or has three (3) prongs.~~

~~Section 7. Certification for Sale. Sales of ginseng by dealers shall be certified for sale during the ginseng selling season beginning September 1of each year and extending until March 31of the following year.~~

~~Section 8. Unsold Ginseng. Ginseng unsold by March 31of the year after harvest shall be weighed by the department and the dealer given a weight receipt. A future export certification of this stock shall only be issued against the weight receipt.~~

~~Section 9. Exportation of Ginseng. (1) Ginseng dealers holding a certificate of registration shall obtain a certificate of legal taking issued by the department after inspection by an official of the department identifying the origin, year of taking, and weight of a shipment of ginseng to a destination outside the Commonwealth of Kentucky. The certificate shall also state whether the ginseng is Wild American Ginseng or whether the ginseng has been cultivated or propagated by a grower. Certification shall be issued to the dealer on triplicate forms issued by the department. A copy of certification shall be enclosed with the shipment subject of the certification. A copy of a certificate shall be retained for a minimum of three (3) years by the licensed ginseng dealer and a copy of the certificate shall be retained by the certifying agent of the department.~~

~~(2) At the time of issuance of the certificate, the department official shall receive from the ginseng dealer copies of all purchase records covering the amount of ginseng certified. Records of ginseng purchased from other dealers shall be recorded with the department prior to a certificate being issued.~~

~~Section 10. Ginseng dug outside the borders of Kentucky and not certified in its state of origin shall not be allowed to enter Kentucky.~~

~~Section 11. (1) Protection of Species, Violation of Law. Ginseng which is obtained in contravention of laws for the protection of the species or in violation of any other law shall not be purchased, sold, shipped, or transported within the Commonwealth of Kentucky.~~

~~(2) The Kentucky Department of Agriculture may enforce the provisions of Section 11 of this administrative regulation herein as provided in KRS 260.030.~~

~~Section 12. Incorporation by Reference. (1) The following material is incorporated by reference:~~

~~(a) "2000-20001 Kentucky Ginseng Dealer Application" (2000-2001 edition);~~

~~(b) "American Ginseng Export Certificate" (December 2000);~~

~~(c) Dealer Transaction Log - Sales (December 2000);~~

~~(d) Ginseng Dealer Purchase Record (December 2000); and~~

~~(e) Wild Ginseng Purchase Record (December 2000).~~

~~(2) These materials may be inspected, copied, or obtained, subject to applicable copyright law, at the Kentucky Department of Agriculture, Division of Value-Added Foods, 100 Fair Oaks, Suite 252, Frankfort, Kentucky 40601, Monday through Friday, 8 a.m. to~~

~~4:30 p.m.~~

RICHIE FARMER, Commissioner of Agriculture
APPROVED BY AGENCY: August 1, 2011
FILED WITH LRC: August 2, 2011 at noon
CONTACT PERSON: Clint Quarles, Staff Attorney, Kentucky Department of Agriculture, 500 Mero Street, 7th Floor, Frankfort Kentucky 40601, phone (502) 564-4696, fax (502) 564-2133.

JUSTICE AND PUBLIC SAFETY CABINET
Department of Corrections
Sex Offender Risk Assessment Advisory Board
(As Amended at ARRS, October 11, 2011)

501 KAR 6:220. Treatment for sex offenders.

RELATES TO: KRS 17.550-17.991
STATUTORY AUTHORITY: KRS 17.564
NECESSITY, FUNCTION, AND CONFORMITY: KRS 17.564 authorizes the Sex Offender Risk Assessment Advisory Board to promulgate administrative regulations to establish the minimum requirements for treatment of sex offenders. This administrative regulation establishes minimum treatment requirements for providers.

Section 1. Definitions. (1) "Approved provider" is defined in KRS 17.550(3).
(2) "Board" is defined in KRS 17.550(1).
(3) "Community standards of care" means the standards of care generally accepted by sex offender treatment professionals within the Commonwealth of Kentucky and taking into account the general standards of care for the mental health profession for which the approved provider is licensed or certified.
(4) "Department" is defined in KRS 197.010(3).
(5) "Treatment services" is defined in KRS 197.420(2)(b).

Section 2. General Procedures for Treatment of All Sex Offenders [~~Procedures for Treatment of Sex Offenders~~]. (1) Treatment shall conform to community standards of care, and shall include:(a) A diagnosis; and
(b) A written treatment plan, which shall include:
1. Goals and objectives; and
2. Modalities of treatment and the rationale **therefor[**~~therefore~~**]**.
(2) Treatment shall be conducted in a psychotherapy format.
(3) Treatment may utilize psychoeducational components if indicated.
(4) Prior to providing treatment, an approved provider shall:
(a) [~~Submit a general treatment curriculum to the board that shall include the required elements in subsection 5(b) of this section; thereafter, proposed changes in the general treatment curriculum shall be submitted to the board for prior approval;~~
~~(b)~~] Obtain written informed consent for treatment from the offender;
(b) [~~(c)~~] Contact the offender's supervising probation and parole officer to discuss the offender and obtain offender information; [~~and~~]
(c) [~~(d)~~] Make a good faith effort to obtain the offender's mental health records; and [~~.~~]
(d) Submit a general treatment curriculum to the board that includes the required elements in Section 3(1) **of this administrative regulation**. If the approved provider intends to treat an offender who has already completed a sex offender treatment program, then the approved provider shall also submit a treatment curriculum that includes the required elements in Section 4(2) of this administrative regulation. If an approved provider proposes changes in his submitted treatment curriculum, the approved provider shall submit a treatment curriculum with the changes to the board for approval.
(5) An approved provider shall:
(a) Provide psychological or pharmaco-therapy services or testing as needed or make the appropriate referral and act as liaison for the provision of services;[~~(b) Utilize a treatment curriculum which, at a minimum, shall include:~~
~~1. Treatment services as may be necessary to meet the needs of the individual offender;~~
~~2. An emphasis on acceptance of responsibility by the offender for present and past sexual offending behavior;~~
~~3. Gender and culture specific programming; and~~
~~4. Education of the offender in:~~
~~a. The cycle of sexual abuse;~~
~~b. Human sexuality;~~
~~c. Deviant arousal and its reduction;~~
~~d. Cognitive restructuring;~~
~~e. Relapse prevention;~~
~~f. Partner and family interactions and support, if applicable;~~
~~g. Victim empathy awareness; and~~
~~h. Relationship skills.~~]
(b)[~~(c)~~] Provide treatment consistent with current professional literature which minimizes the risk of reoffending and emphasizes community safety; [~~(d) Provide eighty (80) face-to-face sessions of at least forty-five (45) minutes for an individual session or ninety (90) minutes for a group session for a minimum of twenty-four (24) months with at least forty (40) face-to-face sessions conducted during the first twelve (12) months;~~]
(c)[~~(e)~~] Maintain an individual record which shall include documentation of the offender's attendance and evaluative progress notes;
(d)[~~(f)~~] Obtain a release of information signed by the sex offender which allows the approved provider to release information to probation and parole personnel responsible for the sex offender's supervision and the Sex Offender Risk Assessment Advisory Board;
(e)[~~(g)~~] Notify the offender's supervising probation and parole officer in writing if the offender fails to attend a treatment session or fails to make a good faith effort to participate in the treatment;
(f)[~~(h)~~] Provide the Required Monthly Progress Report to the supervising probation and parole officer each month;
(g)[~~(i)~~] Cooperate fully with the probation and parole supervision team responsible for a sex offender under the approved provider's treatment;
(h)[~~(j)~~] Prepare a treatment summary at discharge from treatment; and
(i)[~~(k)~~] Provide written notice of the sex-offender's discharge from treatment and the reason for discharge to the supervising probation and parole officer within ten (10) days of discharge.

Section 3. Procedures for Treatment of Sex Offenders Who Have Not Completed a Sex Offender Treatment Program. If a sex offender has not completed a sex offender treatment program, an approved provider shall:
(1) Use a treatment curriculum which, at a minimum, shall include:
(a) Treatment services as may be necessary to meet the needs of the individual offender;
(b) An emphasis on acceptance of responsibility by the offender for present and past sexual offending behavior;
(c) Gender and culture specific programming; and
(d) Education of the offender in:
1. The cycle of sexual abuse;
2. Human sexuality;
3. Deviant arousal and its reduction;
4. Cognitive restructuring;
5. Relapse prevention;
6. Partner and family interactions and support, if applicable;
7. Victim empathy awareness; and
8. Relationship skills**; and[**~~.~~**]**
(2) Provide **a minimum of** eighty (80) face-to-face sessions of at least forty-five (45) minutes for an individual session or ninety (90) minutes for a group session for **at least[**~~a minimum of~~**]** twenty-four (24) months with **a minimum of[**~~at least~~**]** forty (40) face-to-face sessions conducted during the first twelve (12) months.

Section 4. Procedures For Treatment of Sex Offenders Who Have Completed a Sex Offender Treatment Program. (1) If a sex offender has completed a sex offender treatment program, an approved provider shall:
(a) Obtain documentation from the sex offender treatment program showing completion of the program;
(b) **Assess and document whether[**~~Document that~~**]** the of-

fender can demonstrate acceptable levels of skills and knowledge of treatment areas listed in Section 3(1)(d) **of this administrative regulation**;

(c) Require the offender to repeat the areas in Section 3(1)(d) **of this administrative regulation** in which he has not demonstrated competence; and

(d) Provide **a minimum of** fifty (50) face-to-face sessions of at least forty-five(45) minutes for an individual session or ninety (90) minutes for a group session for **at least[**~~a minimum of~~**]** eighteen (18) months with **a minimum of[**~~at least~~**]** forty (40) face-to-face sessions conducted during the first twelve (12) months;

(2) If an offender has completed a sex offender treatment program, the approved provider shall use a treatment curriculum which, at a minimum, shall include:

(a) Dynamic risk factors assessment;

(b) Basic ownership, which means a component for offender responsibility for sexual offending behavior;

(c) Relapse prevention;

(d) Development of treatment partner relationship, including partner alert sessions;

(e) Collaborative development of a practical living skills plan;

(f) Commitment to follow-up with adjunct therapies where needed, including the following: Substance abuse; Domestic violence; Anger management; and Psychotropic medications; and

(g) A plan for family and children reintegration.

(3) Reintegration.

(a) Reintegration with a victim shall not comply with treatment requirements unless it is approved by the approved provider and the probation and parole officer.

(b) If the offender victimized a child, reintegration with other children shall not comply with treatment requirements unless approved by the approved provider and the probation and parole officer.

(c) The approved provider and probation and parole officer shall address at a minimum the following when considering reintegration of an offender with a child victim or other children:

1. Assessment of age and sex of child victims and offender potential for cross-over;

2. Assessment of how the offender accessed prior child victims and similarities to situations and persons with whom he is currently considering to reside;

3. Assessment of adult partner's knowledge and insight into offender's dynamics; and

4. A gradual reintegration process plan.

Section 5. Incorporation by Reference. (1) The Sex Offender Risk Assessment Advisory Board form [~~from~~] "Required Monthly Progress Report", 4/12/05**,** is incorporated by reference.

(2) This material may be inspected, copied, or obtained, subject to applicable copyright law, at the Justice and Public Safety Cabinet, [~~Department of Corrections,~~] Office of Legal Services, 125 Holmes Street, Frankfort, Kentucky 40601, phone (502) 564-3279, fax (502) 564-6686 [~~2439 Lawrenceburg Road, P.O. Box 2400, Frankfort, Kentucky 40602-2400, (502) 564-2024, fax (502) 564-6494~~], Monday through Friday, 8 a.m. to 4:30 p.m.

LADONNA H. THOMPSON, Commissioner
JAMES J. VAN NORT, Chairperson

APPROVED BY AGENCY: August 1, 2011

FILED WITH LRC: August 12, 2011 at 4 p.m.

CONTACT PERSON: Amy V. Barker, Justice and Public Safety Cabinet, Office of Legal Services, 125 Holmes Street, 2nd Floor, Frankfort, Kentucky 40601, phone (502) 564-3279, fax (502) 564-6686.

JUSTICE AND PUBLIC SAFETY CABINET
Department of Kentucky State Police
(As Amended at ARRS, October 11, 2011)

502 KAR 11:010. Application for license to carry concealed deadly weapon.

RELATES TO: KRS 237.110

STATUTORY AUTHORITY: KRS 16.080, [~~17.080~~], 237.110(7) [~~237.110(4)~~]

NECESSITY, FUNCTION, AND CONFORMITY: KRS 237.110(7) [~~237.110(4)~~] requires the Department of Kentucky State Police to establish the application form for a license to carry a concealed deadly weapon. This administrative regulation establishes the application form and procedures.

Section 1. Definitions [~~Definition~~]. (1) "Application form" means the "Commonwealth of Kentucky Carry Concealed Deadly Weapons/LEOSA: Application for License."

(2) "Department" means the Department of Kentucky State Police.

Section 2. (1) Application forms shall not be stored in an area accessible to the public.

(2) Except as permitted by Section 10 of this administrative regulation, an application form shall not be removed from the office of the sheriff.

Section 3. An application form shall be identified by a unique number that shall be:

(1) Expressed on the application form as a bar code that contains the application number;

(2) Used as the identifying number for the applicant; and

(3) Machine and human readable.

Section 4. A sheriff shall issue an application form to an applicant and accept an application fee if:

(1) An applicant meets the requirements established by KRS 237.110 (4)(b), (c), and (i);

(2) Unless exempted by KRS 237.110(6) and (7), an applicant has submitted the material required by KRS 237.110(7);

(3) Verification that an applicant is a resident is made by:

(a) Submission of a valid Kentucky operator's license or personal identification card issued by a circuit court clerk pursuant to KRS 186.412;

(b) Personal knowledge of the sheriff; or

(c) Confirmation by another governmental agency;

(4) Verification of an applicant's Social Security number is made by the submission of:

(a) The applicant's Social Security card; or

(b) A governmental agency document that contains an applicant's name and Social Security number;

(5) Verification of an applicant's age is made by submission of:

(a) An item specified by subsection (3) of this section; or

(b) A birth certificate or other evidence of birth issued by a governmental agency; and

(6) Verification of an applicant's U.S. immigration status [~~citizenship~~] is made by submission of a completed CCDW License Citizenship/Immigration Status [~~Application Citizenship~~] Affidavit (KSP 131) if the applicant has indicated on the application form that the applicant is not a U.S. citizen.

Section 5. An applicant who is exempt from the training requirement established by KRS 237.110(4)(i) shall submit documentation establishing that he or she:

(1)(a) Was a peace officer on the date of his or her retirement; and

(b) Is a member of a retirement system specified by KRS 237.110(6)(a);

(2) Is currently certified as a peace officer by the Kentucky Law Enforcement Council pursuant to KRS 15.380 to 15.404; or

(3) Is a current or retired peace officer of one (1) of the federal agencies listed in KRS 237.110(6)(b).

Section 6. Completion of Application Form. An applicant shall:

(1) Complete an application **[**~~in the presence of the sheriff~~**]**;

(2) Sign the application in the applicant signature block of the application form in ink **[**~~in the presence of the sheriff~~**]**;

(3) Provide the information required by KRS 237.110(7)(a) through (e) on the application form [~~and the CCDW License Application Citizenship Affidavit (KSP 131)~~];

(4) Not fold or tear the form;

(5) Use a black ink pen to complete the form;
(6) Not mark or otherwise make an entry in the "For Sheriff's Dept. Use Only" portion;
(7) Fill each bubble completely;
(8) Fill in or enter information, as appropriate, within a column block or bubble;
(9) Write within the constrained areas; and
(10) Use upper case (capital) letters.

Section 7. The sheriff shall complete the lower [~~upper~~] right hand portion of the application form titled "For Sheriff's Dept. Use Only" by:
(1) Completing the ORI Number;
(2) Filling in the date of application;
(3) Indicating if the applicant is an active or retired peace officer or a judicial officer in accordance with KRS 527.020(5)(a)1. to 4.; and
(4) Signing in the portion labeled "Authorizing Official Signature."

Section 8. If an applicant fails to follow the instructions for completion of an application, the sheriff shall:
(1) Destroy the improperly completed application; and
(2) Require the applicant to complete a new application form.

Section 9. The sheriff shall place the following material in a single applicant packet:
(1) The applicant's completed application form;
(2) A photograph of the applicant complying with the provisions of 502 KAR 11:020;
(3) The CCDW License Citizenship/Immigration Status [~~Application Citizenship~~] Affidavit (KSP 131) if the applicant has indicated on the application form that the applicant is not a U.S. citizen;
(4)(a) A photocopy of the certificate of completion, or notarized affidavit of completion, of the training or safety course or class required by KRS 237.110(4)(i); or
(b) Material provided by an applicant to the sheriff establishing that the applicant is exempt from the training requirement on the grounds that he or she is:
1. Currently certified as a peace officer by the Kentucky Law Enforcement Council pursuant to KRS 15.380 to 15.404;
2. A current or retired peace officer of one of the federal agencies listed in KRS 237.110(6)(b) and successfully completed the basic law enforcement training course required by that agency; or
3. A retired peace officer and is a member of a retirement system specified in KRS 237.110(6)(a); and
(5) Material provided by an applicant to the sheriff establishing that the applicant is exempt from payment of the application fee pursuant to KRS 237.110(7).

Section 10. (1) The sheriff shall mail single applicant packets to the department:
(a) In a bulk mailer; and
(b) On dates established by the "CCDW - LEOSA Application Mailing Schedule for Sheriffs."
(2) The sheriff shall pay the cost of mailing a bulk mailer.

Section 11. (1) If the department issues an original license pursuant to KRS 237.110(4), it shall:
(a) Transmit the license to the sheriff; and
(b) Send an Issuance Notice to the applicant, informing him or her that the license is being conveyed to the sheriff of the county where the applicant resides and what date the license will be available from the sheriff.
(2) The sheriff shall issue the license to the applicant upon:
(a) Verification of the identity of the applicant by:
1. Submission of a valid Kentucky operator's license or personal identification card issued by a circuit court clerk pursuant to KRS 186.412; or
2. Personal knowledge of the sheriff; and
(b) Signature on the Issuance Notice by the applicant in the presence of the sheriff or the sheriff's designee.

Section 12. Incorporation by Reference. (1) The following material is incorporated by reference:
(a) **"**Commonwealth of Kentucky Carry Concealed Deadly Weapons/LEOSA: Application for License**",** November 2009 [~~July 2005~~];
(b) "CCDW - LEOSA Application Mailing Schedule for Sheriffs**",[**~~"~~**]** July 2006;
(c) "CCDW License Citizenship/Immigration Status [~~Application Citizenship~~] Affidavit", KSP 131, **January 2011[**~~November 2009~~**]** [~~July 2006~~]; and
(d) "Issuance Notice," December**[**~~,~~**]** 2008 [~~01/09/07~~].
(2) This material may be inspected, copied, or obtained, subject to applicable copyright law, at the Department of Kentucky State Police, 1266 [~~1250~~] Louisville Road, Frankfort, Kentucky 40601, Monday through Friday, 8 a.m. to 4:30 p.m.

RODNEY BREWER, Commissioner
APPROVED BY AGENCY: August 15, 2011
FILED WITH LRC: August 15, 2011 at 11 a.m.
CONTACT PERSON: Emily M. Perkins, Kentucky State Police, 919 Versailles Rd., Frankfort, Kentucky 40601, phone (502) 782-1784.

JUSTICE AND PUBLIC SAFETY CABINET
Department of Kentucky State Police
(As Amended at ARRS, October 11, 2011)

502 KAR 11:050. Updating, replacement, and renewal of license to carry concealed deadly weapon.

RELATES TO: KRS 237.110
STATUTORY AUTHORITY: KRS 16.080, 36.450, [~~17.080~~], 237.110
NECESSITY, FUNCTION, AND CONFORMITY: KRS 237.110(11) requires a licensee to notify the department if there is a change in the licensee's permanent address. KRS 237.110(12) authorizes a licensee to obtain a duplicate license if the original is lost, stolen, or destroyed. KRS 237.110(14) requires an applicant to renew a license to carry a concealed deadly weapon by submitting the department's renewal form. KRS 36.450 authorizes a carry concealed deadly weapon (CCDW) licensee that is a member of the United States Armed Forces, including a member of the Kentucky National Guard or Reserve on federal active duty, whose license expires while that licensee is deployed overseas to apply for renewal. This administrative regulation establishes the forms and procedures for updating, replacing, and renewing a license to carry a concealed deadly weapon.

Section 1. Definitions. (1) "Department" means the Department of Kentucky State Police.
(2) "Licensee" means an individual with a current and valid license to carry a concealed deadly weapon in the Commonwealth of Kentucky.
(3) "Overseas military deployment" means an overseas deployment of a licensee that is a member of the United States Armed Forces, including a member of the Kentucky National Guard or Reserve on federal active duty.
(4) "Personal information" means the name, date of birth, Social Security Number**,** and address of a licensee.

Section 2. Change of Personal Information. (1) If the [~~address or~~] personal information of a licensee has changed, the licensee shall notify the department of the change on the Carry Concealed Deadly Weapons Licensee Request for Change of Personal Information Form (KSP 121).
(2) The request form shall be completed and signed by the licensee **[**~~in the presence of the sheriff~~**]**.
(3) The sheriff shall verify the change of personal information as provided by:
(a) Submission of a valid Kentucky operator's license or personal identification card issued by a circuit court clerk pursuant to KRS 186.412;
(b) Personal knowledge of the sheriff; or
(c) Confirmation by another governmental agency.

(4) The completed request form shall be:

(a) Signed by the sheriff; and

(b) Transmitted by the sheriff to the department pursuant to 502 KAR 11:010, Section 10.

(5) Upon approval by the department of the change of personal information, the department shall**:[**~~;~~**]**

(a) Issue an updated license;

(b) Transmit the updated license to the sheriff; and

(c) Notify the licensee in writing that the updated license may be obtained by the licensee at the office of the sheriff.

Section 3 [2]. Lost, Stolen, or Destroyed Carry Concealed Deadly Weapon License. (1) If a Carry Concealed Deadly Weapon license is lost, stolen, or destroyed, a licensee shall notify the department on a Request For Duplicate CCDW License Form (KSP 126).

(2) The request form shall be:

(a) Notarized; and

(b) Completed and signed by the licensee **[**~~in the presence of the sheriff~~**]**.

(3) The licensee shall attach to the request form a check or money order, payable to the Department of Kentucky State Police, in the amount of fifteen (15) dollars.

(4) The completed request form shall be:

(a) Signed by the sheriff; and

(b) Transmitted by the sheriff to the department pursuant to 502 KAR 11:010, Section 10.

(5) Upon approval by the department of the request for a duplicate license, the department shall:

(a) Issue a duplicate license that contains a license number that differs from the license number on the lost, stolen, or destroyed license;

(b) Transmit the duplicate license to the sheriff; and

(c) Notify the licensee in writing that the duplicate license may be obtained by the licensee at the office of the sheriff.

Section 4 [~~3~~]. Notice of Renewal. Except as provided in KRS 36.450, the [~~The~~] department shall mail to each licensee, not less than 120 days prior to the expiration date of the license, a Renewal Notice.

Section 5. [~~4.~~] License Renewal for a Licensee Whose License Did Not Expire during an Overseas Military Deployment.

(1) **The licensee shall:**

(a) Complete and sign the Renewal Notice in ink;

(b) Have his or her signature on the Renewal Notice notarized; and

(c) Attach the following:

1. A recent photograph of the licensee that meets the requirements of 502 KAR 11:020; and

2. A copy of the CCDW License Citizenship/Immigration Status Affidavit (KSP 131) if the licensee is not a U.S. citizen.

[~~The Renewal Notice shall be:~~

~~(a) Notarized;~~

~~(b) Signed by the licensee in the presence of the sheriff;~~

~~(c) Signed by the sheriff; and~~

~~(d) Accompanied by:~~

~~(i) A recent photograph of the licensee that meets the requirements of 502 KAR 11:020;~~

~~(ii) A copy of the CCDW License Citizenship/Immigration Status Affidavit (KSP 131) if the licensee is not a U.S. citizen; and~~

~~(iii) A check or money order, payable to the Department of Kentucky State Police, in the amount of forty (40) dollars and a check or money order, payable to the sheriff of the licensee's county of residence, in the amount of twenty (20) dollars.~~**]**

(2) The sheriff shall:

(a) Verify the address of the licensee as provided by 502 KAR 11:010, Section 4; **[**~~and~~**]**

(b) **Sign the Renewal Notice in ink; and**

(c) Transmit the completed Renewal Notice and **attached documents [**~~Renewal Affidavit~~**]** to the department pursuant to 502 KAR 11:010, Section 10.

[~~Section 4. License Renewal. (1) The Renewal Notice shall be:~~

~~(a) Signed by the licensee in the presence of the sheriff;~~

~~(b) Signed by the sheriff; and~~

~~(c) Accompanied by a CCDW License Renewal Affidavit (KSP 125), a copy of which shall be provided by the sheriff to the applicant upon request.~~

~~(2) The Renewal Affidavit shall be:~~

~~(a) Notarized; and~~

~~(b) Signed by the licensee in the presence of the sheriff.~~

~~(3) The sheriff shall:~~

~~(a) Verify the address of the licensee as provided by 502 KAR 11:010, Section 4; and~~

~~(b) Transmit the completed Renewal Notice and Renewal Affidavit to the department pursuant to 502 KAR 11:010, Section 10.~~]

Section 6. License Renewal for a Licensee Whose License Expires During an Overseas Military Deployment and Requests Renewal Pursuant to KRS **36.450(6)(a)[**~~36.450~~**]**.

(1) Upon receipt of the request, the Department shall mail a **Renewal Notice[**~~renewal application~~**]** and an "Armed Forces Overseas Deployment CCDW License Renewal Affidavit" (KSP 154) to the licensee at the active duty military address specified by the licensee and notify the sheriff of the licensee's county of residence that the licensee has requested overseas renewal.

(2) Upon receipt of the renewal application and "Armed Forces Overseas Deployment CCDW License Renewal Affidavit" (KSP 154) the licensee shall:

(a) Complete and sign the forms in ink;

(b) Have his signature on the forms notarized;

(c) Attach the following:

1.[~~(i)~~**]** Documentation of his or her overseas deployment, including the dates of that deployment;

2.[~~(ii)~~**]** A copy of the licensee's valid Kentucky operator's license or personal identification card issued by a circuit court clerk pursuant to KRS 186.412;

3.[~~(iii)~~**]** A copy of the CCDW License Citizenship/Immigration Status Affidavit (KSP 131) if the licensee is not a U.S. citizen; **and**

4.[~~(iv)~~**]** A recent photograph of the licensee that meets the requirements of 502 KAR 11:020; **and [**~~(v) A check or money order, payable to the Department of Kentucky State Police, in the amount of forty (40) dollars and a check or money order, payable to the sheriff of the licensee's county of residence, in the amount of twenty (20) dollars; and~~**]**

(d) Return the completed forms **and attached documents** to the sheriff of the licensee's county of residence by mail or facsimile.

Section 7. **License renewal for a licensee whose license expired during an overseas military deployment and requests renewal after license expiration and upon return to the county of residence pursuant to KRS 36.450(6)(b).**

(1) The licensee shall:

(a) Complete and sign the "Armed Forces Overseas Deployment Expired CCDW License Renewal Affidavit" (KSP 154A) in ink;

(b) Have his or her signature on the form notarized;

(c) Attach documentation of his or her overseas deployment, including the dates of that deployment; and

(d) Complete the renewal process set forth in Section 5 of this administrative regulation.

(3) The completed form and attached documents shall be attached to the Renewal Notice and transmitted by the sheriff to the department pursuant to 502 KAR 11:010, Section 10.[~~Late Fee Waiver for a Licensee Whose License Expires During an Overseas Military Deployment.~~

~~(1) If a licensee allows his or her license to expire and, upon return to the county of residence, wishes to apply for renewal of the license pursuant to KRS 36.450(6)(b), he or she may request a waiver of the late fee by:~~

~~(a) Completing and signing in ink the "Armed Forces Overseas Deployment CCDW License Renewal Late Fee Waiver Request" (KSP 154A) in the presence of the sheriff of the county of the licensee' residence.~~

~~(b) Attaching documentation of my overseas deployment, including the dates of that deployment, to the "Armed Forces Overseas Deployment CCDW License Renewal Late Fee Waiver Re-~~

~~quest" (KSP 154A).~~

~~(2) The completed form shall be:~~

~~(a) Signed by the sheriff; and~~

~~(b) Transmitted by the sheriff to the department pursuant to 502 KAR 11:010, Section 10.~~**]**

Section 8. Incorporation by Reference. (1) The following material is incorporated by reference:

(a) "Carry Concealed Deadly Weapons Licensee Request for Change of Personal Information", KSP 121, 07/06;

(b) "Request for Duplicate CCDW License**",**[**"]** KSP 126, 05/06;

(c) "Renewal Notice", **05/10[**~~01/09/07~~]; [~~and~~]

(d) "CCDW License Citizenship/Immigration Status Affidavit**", KSP 131, 01/11;[**~~(KSP 131), 04/08~~][~~"CCDW License Renewal Affidavit"' KSP 125, 07/06.~~]

(e) "Armed Forces Overseas Deployment CCDW License Renewal Affidavit"**, [**~~(~~]KSP 154**, 06/10[**~~), 01/11~~]; and

(f) "Armed Forces Overseas Deployment **Expired** CCDW License Renewal **Affidavit", KSP 154A, 10/11[**~~Late Fee Waiver Request" (KSP 154A), 01/11~~**].**

(2) This material may be inspected, copied, or obtained, subject to applicable copyright law, at the Department of Kentucky State Police, 1266 [~~1250~~] Louisville Road, Frankfort, Kentucky 40601, Monday through Friday, 8 a.m. to 4:30 p.m.

RODNEY BREWER, Commissioner

APPROVED BY AGENCY: August 15, 2011

FILED WITH LRC: August 15, 2011 at 11 a.m.

CONTACT PERSON: Emily M. Perkins, Kentucky State Police, 919 Versailles Rd., Frankfort, Kentucky 40601, phone (502) 782-1784.

JUSTICE AND PUBLIC SAFETY CABINET
Department of Kentucky State Police
Technical Services Division
(As Amended at ARRS, October 11, 2011)

502 KAR 13:010. Application for certification under the Law Enforcement Officers Safety Act of 2004 ("LEOSA"), 18 U.S.C. 926C, for honorably retired elected or appointed peace officers.

RELATES TO: KRS 15.383, 61.365, 186.412, 237.138-237.142, 446.010**(29)[**~~(25)~~**]**, 18 U.S.C. 926C, Pub.L. 108-277

STATUTORY AUTHORITY: KRS 237.140

NECESSITY, FUNCTION, AND CONFORMITY: KRS 237.140 provides for the certification of honorably retired elected or appointed peace officers to carry a concealed deadly weapon pursuant to 18 U.S.C. 926C and requires the Kentucky State Police to promulgate administrative regulations to implement the certification provisions. This administrative regulation establishes the requirements and procedures for certification.

Section 1. Definitions. (1) "Applicant" means an honorably retired peace officer who has applied to the Kentucky State Police to be certified to carry a concealed deadly weapon pursuant to 18 U.S.C. 926C.

(2) "Application form" means the "Commonwealth of Kentucky Carry Concealed Deadly Weapons/LEOSA: Application for License."

(3) "Honorably retired" means an elected or appointed peace officer who:

(a) Separated [~~Retired~~] in good standing from service with a public agency as a law enforcement officer [~~, other than for reasons of mental instability~~];

(b) Before separation [~~retirement~~], was authorized by law to engage in or supervise the prevention, detection, investigation, or prosecution of, or the incarceration of any person for, any violation of law, and had statutory powers of arrest;

(c)1. Before separation, served as a law enforcement officer for an aggregate of **ten (10)[**~~10~~**]** years or more [~~retirement, was regularly employed as a law enforcement officer for an aggregate of fifteen (15) years or more~~]; or

2. Separated [~~Retired~~] from service with an agency, after completing any applicable probationary period of service, due to a service-connected disability, as determined by the agency;

(d)1. Has not been officially found by a qualified medical professional employed by the agency from which the applicant separated from service to be unqualified for reasons relating to mental health; or

2. Has not entered into an agreement with the agency from which the applicant separated from service in which the applicant acknowledged that he or she is not qualified under 18 U.S.C. 926C for reasons relating to mental health; [~~Has a nonforfeitable right to benefits under the retirement plan of the agency;~~]

(e) During the most recent twelve (12) month period, has met, at the expense of the retired peace officer, Kentucky's standards for training and qualifications for active law enforcement officers to carry firearms, as set out in KRS 15.383;

(f) Is not under the influence of alcohol or another intoxicating or hallucinatory drug or substance; and

(g) Is not prohibited by Federal law from receiving a firearm.

(4) "Peace Officer" is defined by KRS 446.010**(29)[**~~(25)~~**]** and 61.365.

Section 2. An application form shall be identified by a unique number that shall be:

(1) Expressed on the application form as a bar code that contains the application number;

(2) Used as the identifying number for the applicant; and

(3) Machine and human readable.

Section 3. Application forms shall:

(1) Not be stored in an area accessible to the public; and

(2) Not be removed from the office of the sheriff except as permitted by Section 6(4) of this administrative regulation.

Section 4. A sheriff shall issue an application form to an applicant if:

(1) An applicant meets the requirements established by KRS 237.138 to 237.142;

(2) The sheriff has verified that an applicant is qualified for certification pursuant to KRS 237.138 to 237.142 and this administrative regulation;

(3) An applicant has submitted the material required by KRS 237.138 to 237.142 and this administrative regulation;

(4) Verification that an applicant is a Kentucky resident is made by:

(a) Submission of a valid Kentucky operator's license or personal identification card issued by a circuit court clerk pursuant to KRS 186.412;

(b) Personal knowledge of the sheriff; or

(c) Confirmation by another governmental agency; and

(5) Verification of an applicant's Social Security number is made by submission of:

(a) The applicant's Social Security card; or

(b) A governmental agency document that contains the applicant's name and Social Security number.

Section 5. Completion of Application Form. An applicant shall:

(1) Complete an application **[**~~in the presence of the sheriff~~**]**;

(2) Sign the application in the applicant signature block of the application form in ink;

(3) Provide the information required by KRS 237.110(7)(a) through (e) on the application form;

(4) Not fold or tear the form;

(5) Use a black ink pen to complete the form;

(6) Not mark or otherwise make an entry in the "For Sheriff's Dept. Use Only" portion;

(7) Fill each bubble completely;

(8) Fill in or enter information, as appropriate, within a column block or bubble;

(9) Write within the constrained areas;

(10) Use upper case (capital) letters;

(11) Provide a photograph of the applicant complying with the provisions of 502 KAR 13:070;

(12) Submit the following completed forms to the sheriff to be

attached to the application form:

(a) A Peace Officer Range Qualification Certification-LEOSA (KSP 123); [~~and~~]

(b) LEOSA Applicant Certification (KSP 124A) [~~A Certification Of Law Enforcement Retirement-LEOSA (KSP 124)~~]; and

(c) LEOSA Law Enforcement Retirement Certification (KSP 124B); **and**

(13) Not be required to pay an application fee.

Section 6. Sheriff's Duties. (1) If an applicant fails to follow the instructions for completion of an application, the sheriff shall:

(a) Destroy the improperly completed application; and

(b) Require the applicant to complete a new application form.

(2) The sheriff shall complete in black ink the **lower[**~~upper~~**]** right hand portion of the application form titled "For Sheriff's Dept. Use Only" by:

(a) Completing the ORI Number;

(b) Filling in the date of application;

(c) Indicating the applicant is a retired peace officer;

(d) Indicating the applicant is seeking LEOSA certification; and

(e) Signing in the portion labeled "Authorizing Official Signature."

(3) The sheriff shall place the following material in a single applicant packet:

(a) The applicant's completed application form;

(b) A photograph of the applicant complying with the provisions of 502 KAR 13:070; and

(c) A completed KSP 123, 124A**,** and 124B [~~and 124~~].

(4) The sheriff shall mail single applicant packets:

(a) In a bulk mailer; and

(b) On dates established by the "CCDW-LEOSA Application Mailing Schedule For Sheriffs."

Section 7. Incorporation by Reference. (1) The following material is incorporated by reference:

(a) "Commonwealth of Kentucky Carry Concealed Deadly Weapons/LEOSA: Application for License"**, October[**~~November~~**]** 2009 [~~July 2005~~];

(b) "CCDW-LEOSA Application Mailing Schedule For Sheriffs**",[**~~"~~**]** July 2006;

(c) "Peace Officer Range Qualification Certification-LEOSA**",[**~~"~~**]** KSP 123, 07/05; [~~and~~]

(d) **"**LEOSA Applicant Certification**"**, KSP 124A, **December[**~~November~~**]** 2010; and [~~"Certification Of Law Enforcement Retirement-LEOSA," KSP 124, 08/06~~]

(e) **"**LEOSA Law Enforcement Retirement Certification**"**, KSP 124B, **December[**~~November~~**]** 2010**.[**~~;~~**]**

(2) This material may be inspected, copied, or obtained, subject to applicable copyright law, at the Criminal Identification and Records Branch, Kentucky State Police, **1266[**~~1250~~**]** Louisville [~~,~~] Road, Frankfort, Kentucky 40601, Monday through Friday 8 a.m. to 4:30 p.m., phone, (502) 227-8700.

RODNEY BREWER, Commissioner

APPROVED BY AGENCY: August 15, 2011

FILED WITH LRC: August 15, 2011 at 11 a.m.

CONTACT PERSON: Emily Perkins, Department of Kentucky State Police, Office of Legal Services, 919 Versailles Road, Frankfort, Kentucky 40601, phone (502) 782-1784, fax (502) 573-1636.

JUSTICE AND PUBLIC SAFETY CABINET
Department of Kentucky State Police
Technical Services Division
(As Amended at ARRS, October 11, 2011)

502 KAR 13:040. Issuance, expiration, and renewal of certification to carry a concealed deadly weapon pursuant to the Law Enforcement Officers Safety Act of 2004 ("LEOSA"), 18 U.S.C. 926C, for honorably retired elected or appointed peace officers.

RELATES TO: KRS 186.412, 237.110, 237.138, 237.140, 237.142, 18 U.S.C. 926C

STATUTORY AUTHORITY: KRS 237.140

NECESSITY, FUNCTION, AND CONFORMITY: KRS 237.140 provides for the certification of honorably retired elected or appointed peace officers to carry a concealed deadly weapon pursuant to 18 U.S.C. 926C and requires the Kentucky State Police to promulgate administrative regulations to implement the certification provisions. This administrative regulation establishes the requirements and procedures for the issuance, expiration, and renewal of a LEOSA license.

Section 1. Definition. (1) "License" means the document indicating the approved certification pursuant to the Law Enforcement Officers Safety Act of 2004, 18 U.S.C. 926C.

Section 2. Issuance of License. (1) The department shall issue a LEOSA license if it confirms that the applicant is qualified to carry a concealed deadly weapon pursuant to 18 U.S.C. 926C after the department has received the documentation required by 502 KAR 13:010.

(2) If the department issues a LEOSA license, it shall:

(a) Transmit the license to the sheriff; and

(b) Send an issuance notice to the applicant, informing him or her that the license is being conveyed to the sheriff of the county where the applicant resides and what date the license will be available from the sheriff.

(3) The sheriff shall issue the license to the applicant upon:

(a) Verification of the identity of the applicant by:

1. Submission of a valid Kentucky operator's license or personal identification card issued by a circuit court clerk pursuant to KRS 186.412; or

2. Personal knowledge of the sheriff; and

(b) Signature of the issuance notice by the applicant in the presence of the sheriff or the sheriff's designee.

Section 3. Expiration. A LEOSA license shall expire one (1) year from the date of the range qualification listed on the "Peace Officer Range Qualification Certification-LEOSA," KSP 123, submitted with the application.

Section 4. Renewal. Not less than one hundred twenty (120) days prior to the expiration date of the license, the department shall mail to each licensee a "Notice of Expiration - LEOSA." Any licensee wishing to renew the license shall apply and be approved in the manner described in 502 KAR 13:010 and this administrative regulation for first time applicants except that a licensee shall not have to submit a copy of the "LEOSA Law Enforcement Retirement Certification", KSP 124B, if the licensee previously submitted a retirement certification that was accepted by the department **[**~~in the eighteen (18) month period immediately preceding the renewal application~~**]**. [~~may submit a copy of the Certification Of Law Enforcement Retirement-LEOSA (KSP 124) that was previously provided with the licensee's original or renewal LEOSA application.~~]

Section 5. Identification. A LEOSA license issued by the department to a successful applicant shall consist of a photographic identification card containing the following:

(1) The front of the photographic identification card shall include the following information for the certified retired peace officer:

(a) Name;

(b) Address;

(c) Date of birth;

(d) Law enforcement agency retired from;

(e) Expiration date of certification;

(f) LEOSA license number; and

(g) Photograph.

(2) The back of the photographic identification card shall be substantially in the following form: The Commonwealth of Kentucky hereby certifies that the licensee identified on the front of this card is a qualified retired law enforcement officer as defined in the Law Enforcement Officers Safety Act of 2004, 18 U.S.C. 926C, and has, within one (1) year prior to the expiration date shown on the front of this card, been tested or otherwise found by the Commonwealth of Kentucky to meet the marksmanship qualification requirement established by the Commonwealth for peace officers.

Section 6. Incorporation by Reference. (1) The following material is incorporated by reference:

(a) "Peace Officer Range Qualification Certification-LEOSA", KSP 123, 07/05;

(b) "Notice of Issuance", 1/9/07; [~~and~~]

(c) "Notice of Expiration - LEOSA", 6/21/07; and [~~.~~]

(d) "LEOSA Law Enforcement Retirement Certification", KSP 124B, **December[**~~November~~**]** 2010.

(2) This material may be inspected, copied, or obtained, subject to applicable copyright law, at the Criminal Identification and Records Branch, Kentucky State Police, 1266 [~~1250~~] Louisville [~~.~~] Road, Frankfort, Kentucky 40601, Monday through Friday, 8 a.m. to 4:30 p.m. The phone number for the Criminal Identification and Records Branch is (502) 227-8700.

RODNEY BREWER, Commissioner

APPROVED BY AGENCY: August 15, 2011

FILED WITH LRC: August 15, 2011 at 11 a.m.

CONTACT PERSON: Emily Perkins, Department of Kentucky State Police, Office of Legal Services, 919 Versailles Road, Frankfort, Kentucky 40601, phone (502) 782-1784, fax (502) 573-1636.

JUSTICE AND PUBLIC SAFETY CABINET
Department of Kentucky State Police
(As Amended at ARRS, October 11, 2011)

502 KAR 13:070. Applicant photograph requirements for certification to carry a concealed deadly weapon pursuant to the Law Enforcement Officers Safety Act of 2004 ("LEOSA"), 18 U.S.C. 926C, for honorably retired elected or appointed peace officers.

RELATES TO: KRS 237.110, 237.138, 237.140, 237.142, 18 U.S.C. 926C

STATUTORY AUTHORITY: KRS 237.140

NECESSITY, FUNCTION, AND CONFORMITY: KRS 237.140 provides for the certification of honorably retired elected or appointed peace officers to carry a concealed deadly weapon pursuant to 18 U.S.C. 926C and requires the Kentucky State Police to promulgate administrative regulations to implement the certification provisions. This administrative regulation establishes applicant photograph requirements for LEOSA certification.

Section 1. Definition. (1) "License" means the document indicating the approved certification pursuant to the Law Enforcement Officers Safety Act of 2004, 18 U.S.C. 926C.

Section 2. The photograph of an applicant for a LEOSA license shall not be an image produced by a copier or copy equipment and shall:

(1)**(a)** Be an original color photograph or a color photographic copy developed from the negative of an original photograph and:

1.[~~(a)~~**]** Be no less than three and one-half (3 1/2) inches by four (4) inches; **and**

2.[~~(b)~~**]** Not exceed four (4) inches by six (6) inches;

(b)[~~(3)~~**]** Be a color photograph from a digital camera, rated for seven (7) megapixels or greater, printed on photograph quality paper; or

(c)[~~(4)~~**]** Be an original color passport style photograph that is:

1.[~~(a)~~**]** 2 x 2 inches in size; and

2.[~~(b)~~**]** Between 1 inch and 1 3/8 inches from the bottom of the chin to the top of the head**;[**~~.~~**]**

(2)[~~(5)~~**]** Display the full front of the head and the facial features of the applicant; and

(3)[~~(6)~~**]** Not be a photograph of the applicant wearing:

(a) Sunglasses;

(b) A hat; or

(c) Attire that obscures a facial feature, hair**,** or hairline. [~~(1) Be a color photograph;~~

~~(2) Be no less than three and one-half (3 1/2) inches by four (4) inches;~~

~~(3) Not exceed four (4) inches by five (5) inches;~~

~~(4) Display the full front of the head and the facial features of the applicant;~~

~~(5) Not be a photograph of the applicant wearing sunglasses or attire that obscures a feature of the applicant's face;~~

~~(6) Be an original photograph or a photographic copy developed from the negative of an original photograph; and~~

~~(7) Not be an image produced by a digital camera, computer, or a copier or other copy equipment or copy machine.~~]

Section 3. The department shall:

(1) Consider an application incomplete if an applicant submits a photograph that it determines does not comply with the requirements of Section 1 of this administrative regulation; and

(2) Notify the sheriff who transmitted the application form and the applicant pursuant to the provisions of 502 KAR 13:080.

RODNEY BREWER, Commissioner

APPROVED BY AGENCY: August 15, 2011

FILED WITH LRC: August 15, 2011 at 11 a.m.

CONTACT PERSON: Emily Perkins, Department of Kentucky State Police, Office of Legal Services, 919 Versailles Road, Frankfort, Kentucky 40601, phone (502) 782-1784, fax (502) 573-1636.

PUBLIC PROTECTION CABINET
Department of Insurance
Agent Licensing Division
(As Amended at ARRS, October 11, 2011)

806 KAR 9:020. False or deceptive names, titles, prohibited.

RELATES TO: KRS **292.330(1), 304.1-010,** 304.09, 304.12-130

STATUTORY AUTHORITY: KRS 304.2-110

NECESSITY, FUNCTION, AND CONFORMITY: KRS 304.2-110 authorizes that the Commissioner [~~Executive Director~~] of Insurance to make [~~reasonable rules and~~] administrative regulations necessary for or as an aid to the effectuation of any provisions of the Kentucky Insurance Code as defined in KRS 304.1-010. This administrative regulation prohibits the use of names, titles, degrees, certificates, accomplishments, or the like, that implies a greater skill or knowledge than the person actually possesses.

Section 1. Definitions [~~Definition~~]. (1) "Agent" is defined in KRS 304.9-020(1).

(2) "Annuity" is defined in KRS 304.5-030.

(3) **"Commissioner" is defined by KRS 304.1-050(1).**

(4) "Consultant" is defined in KRS 304.9-040. **[**~~(4) "Commissioner" is defined in KRS 304.1-050(1).~~**]**

(5) "Insurer" is defined in KRS 304.1-040.

(6) "Licensee" means agent, insurer, if an agent is not involved, and consultant.

(7) "Life Insurance" is defined in KRS 304.5-020. [~~"Executive director" means the Executive Director of the Office of Insurance.~~]

Section 2. A person licensed pursuant to KRS Chapter 304, Subtitle 9, shall not, in the conduct of business, use, or knowingly permit to be used on the person's behalf, any name, title, letters, degrees, certificate, accomplishment, award, designation or the like, which:

(1) [~~(a)~~] Implies or purports to convey that the person possesses a greater skill, knowledge, experience or qualification than is actually a fact; [~~or~~]

(2) [~~(b)~~] Exceeds the maximum requirements for licensing under the Kentucky Insurance Code as defined in KRS 304.1-010; or[~~.~~]

(3) Implies or purports to convey that the person possesses a greater skill, knowledge, experience**,** or qualification in advising or servicing seniors in connection with the solicitation, sale**,** or purchase of a life insurance or annuity product.

Section 3. Section 2 of this administrative regulation shall not prohibit the use of names, titles, letters, degrees, certificates, recognition of accomplishments, awards, designations**,** or the like

which have been properly conferred upon a licensee by:

(1) A duly accredited and recognized college or university; or

(2) A duly accredited and recognized professional association or society.

Section 4. Factors Constituting a Certification or Designation. In determining if a combination of words, or an acronym standing for a combination of words, constitutes a certification or professional designation indicating or implying that a person has special certification or training in advising or servicing seniors, factors to be considered shall include:

(1)(a) Use of the words "senior", "retirement", "elder", or similar words;

(b) Combined with "certified", "registered", "chartered", "advisor", "specialist", "consultant", "planner", or similar words; and

(2) The manner in which those words are combined.

Section 5. Certain Job Titles. A job title within an organization that is licensed or registered by a state or federal financial services regulatory agency, including an agency that regulates insurance licensees, **shall not be[**~~is not~~**]** a certification or professional designation, unless:

(1) It [~~it~~] is used in a manner that would confuse or mislead a reasonable consumer; and

(2) The [~~in a~~] job title:

(a) Indicates [~~(1) Indicating~~] seniority or standing within the organization; or

(b) Specifies [~~(2) Specifying~~] an individual's area of specialization within the organization.

Section 6. **This administrative regulation shall not[**~~Nothing in this administrative regulation shall~~**]** exempt an individual from compliance with the registration requirements of KRS 292.330(1) if the individual transacts business in this state as a broker-dealer, investment adviser, agent, or investment adviser representative.

SHARON P. CLARK, Commissioner
ROBERT D. VANCE, Secretary

APPROVED BY AGENCY: September 14, 2011

FILED WITH LRC: September 15, 2100 at 9 a.m.

CONTACT PERSON: DJ Wasson, Staff Assistant, Kentucky Department of Insurance, P.O. Box 517, Frankfort, Kentucky 40602, phone (502)564-0888, fax (502) 564-1453.

PUBLIC PROTECTION CABINET
Department of Housing, Buildings and Construction
Division of Building Codes Enforcement
(As Amended at ARRS, October 11, 2011)

815 KAR 4:010. Annual inspection of [~~passenger~~] elevators.

RELATES TO: KRS 198B.400, 198B.470, 198B.480, 198B.500, 198B.510, 198B.540

STATUTORY AUTHORITY: KRS 198B.060(18), 198B.490

NECESSITY, FUNCTION, AND CONFORMITY: KRS 198B.490 requires the commissioner of the Department of Housing, Buildings and Construction [~~executive director~~] to promulgate administrative regulations [~~an administrative regulation~~] governing the safety and inspection of [~~passenger~~] elevators as defined by KRS 198B.400(1) [~~and (2)~~]. This administrative regulation establishes the annual inspection requirements and fees for [~~safety standards governing the annual inspection of passenger~~] elevators within the Commonwealth.

Section 1. Annual Inspection of [~~Passenger~~] Elevators [~~and Escalators~~].**[**~~(1) Except as provided in subsection (2) of this section,~~**]** An annual inspection of an elevator[~~a passenger elevator or escalator~~] shall be conducted in accordance with the standards as **established[**~~adopted~~**]** and incorporated by reference in 815 KAR 7:120**,** Kentucky Building Code.[~~following standards:~~

~~(a) "Safety Code for Elevators and Escalators", ASME A17.1-2004 sections 5.10, 8.7, 8.10, and 8.11 in their entirety with the exception of rules 2.2.4.3, 2.19.2, 2.19.3.2(A)(3), 2.26.2.33, 2.27.3.2.6, 2.27.3.3.7, 3.17.3, 3.26.10, 6.1.3.3.9, and 8.6.5.8 for existing elevators and escalators, or the edition of A17.1 Safety Code in its entirety that the elevator was originally permitted under;~~

~~(b) "Inspectors' Manual for Hydraulic Elevators", ASME A17.2.2-1997;~~

~~(c) "Inspectors' Manual for Escalators and Moving Walks", ASME A17.2.3-1998;~~

~~(d) "Safety Code for Existing Elevators and Escalators", ASME A17.3-2002;~~

~~(e) "Guide for Emergency Personnel", ASME A17.4-1999;~~

~~(f) "Elevator and Escalator Electrical Equipment", ASME A17.5-1996;~~

~~(g) "Safety Standard for Conveyors and Related Equipment", ASME B20.1-1996; and~~

~~(h) "Safety Standard for Platform Lifts and Stairway Chairlifts", ASME A18.1-2003 in its entirety with the exception of rules 5.7.1 and 10.1.2.1;~~

~~(i) "Automated People Mover Standards-Part 1", ANSI/ASCE/T&D1 21-05;~~

~~(j) "Automated People Mover Standards-Part 2", ASE 21-98; and~~

~~(k) "Automated People Mover Standards-Part 3", ASCE 21-00.~~]

[~~(2) Compliance with a later edition of the standards required by subsection (1) of this section shall be deemed equivalent and may be used by the owner or contractor in lieu of the edition specified. If installed in compliance with a later edition, the elevator shall be inspected for compliance with the installation standards utilized.~~

~~(3) For annual inspections of freight elevators, the owner or operator shall provide elevator maintenance or contractor personnel present to conduct testing procedures necessary for inspection.~~**]**

Section 2. Inspection Fees. (1) The annual inspection **fee[**~~fees~~**]** for the issuance of a certificate of operation shall be as follows: [~~established in this subsection.~~]

Elevators	Inspection Fee
Wheelchair and Stair Chair Lift	$75
Dumbwaiter	$85
Limited Use, Limited Access (Lula)	$100
Moving Sidewalk	$100
Passenger	$100
Hydraulic	$100
Special Purpose (private residential or vertical reciprocating conveyor)	$100
Escalator	$120
Freight	$200
Traction	$100 for initial ten (10) stories; plus $10 for each additional ten (10) stories or portion thereof

[~~(a) The wheelchair and stair chair lift inspection fee shall be seventy-five (75) dollars.~~

~~(b) The dumbwaiter inspection fee, if under contract to inspect, shall be eighty-five (85) dollars.~~

~~(c) The limited-use limited-access (Lula) elevator inspection fee shall be $100.~~

~~(d) The escalator and moving walk inspection fee shall be $120.~~

~~(e) The hydraulic elevator inspection fee shall be $100.~~

~~(f) Inspection of traction elevators. The fee for:~~

~~1. The first ten (10) floors shall be $100; and~~

~~2. Each additional ten (10) floors, or portion thereof, shall be an additional ten (10) dollars.~~]

(2) The fee for an inspection conducted at the request of the owner or user of a unit, other than an inspection made pursuant to a construction, installation**,** or alteration permit, or annual inspection, shall be subject to [~~be based on~~] the same fee schedule as an annual inspection in **subsection[**~~subsections~~**]**[~~subsection~~] (1)**[**~~and~~

~~(2)~~**]** of this section.

Section 3. Certificate of Approval. Upon demonstration during final inspection of compliance with applicable codes and standards for the elevator, a certificate of approval shall be issued by the department. [~~Incorporation by Reference. (1) The following material is incorporated by reference:~~

~~(a) "Safety Code for Elevators and Escalators", ASME A17.1-2004 Sections 5.10, 8.7, 8.10, and 8.11;~~

~~(b) Inspector's Manual for Hydraulic Elevators, ASME A17.2.2-1997;~~

~~(c) "Inspectors' Manual for Escalators and Moving Walks", ASME A17.2.3-1998;~~

~~(d) "Safety Code for Existing Elevators and Escalators", ASME A17.3-2002;~~

~~(e) "Guide for Emergency Personnel", ASME A17.4-1999;~~

~~(f) "Elevator and Escalator Electrical Equipment", ASME A17.5-1996;~~

~~(g) "Safety Standard for Conveyors and Related Equipment", ASME B20.1-1996; and~~

~~(h) "Safety Standard for Platform Lifts and Stairway Chairlifts", ASME A18.1-2003.~~

~~(i) "Automated People Mover Standards-Part 1", ANSI/ASCE/T&D1 21-05, 2006;~~

~~(j) "Automated People Mover Standards-Part 2", ASE 21-98, 1999; and~~

~~(k) "Automated People Mover Standards-Part 3", ASCE 21-00, 2002.~~

~~(2) This material may be inspected, copied, or obtained, subject to applicable copyright law, at the Office of Housing, Buildings and Construction, 101 Sea Hero Road, Suite 100, Frankfort, Kentucky 40601-5405, Monday through Friday, 8 a.m. to 4:30 p.m.~~

~~(3) This material may also be obtained from the American Society of Mechanical Engineers, 1901 Alexander Bell Drive, Reston, Virginia 20191-4400.~~]

JERRY T. LUNSFORD, Commissioner
ROBERT D. VANCE, Secretary
APPROVED BY AGENCY: July 8, 2011
FILED WITH LRC: July 8, 2011 at 4 p.m.
CONTACT PERSON: Dawn M. Bellis, General Counsel, Department of Housing, Buildings and Construction, 101 Sea Hero Road, Suite 100, Frankfort, Kentucky 40601-5405, phone (502)573-0365 Ext. 144, fax (502)573-1057.

PUBLIC PROTECTION CABINET
Department of Housing, Buildings and Construction
Division of Building Codes Enforcement
(As Amended at ARRS, October 11, 2011)

815 KAR 4:025. Permit fees for new and altered elevators.

RELATES TO: KRS 198B.050, 198B.400-198B.540
STATUTORY AUTHORITY: KRS 198B.060, 198B.4009, 198B.490, 198B.520
NECESSITY, FUNCTION, AND CONFORMITY: KRS 198B.490 authorizes the Commissioner [~~Executive Director~~] of the Department of Housing, Buildings and Construction to make inspections and prescribe the associated fees to be charged for each elevator constructed, installed, or altered within the Commonwealth. This administrative regulation establishes the permitting and inspection fees for passenger and freight elevators. [~~the installation and alteration of each elevator as defined by KRS 198B.400(1). This administrative regulation includes the substance of 815 KAR 4:021, which has been repealed.~~]

Section 1. Definitions. (1) "Alteration" means a [~~any~~] change **that:**

(a) Is made to an elevator, elevator equipment, or elevator devices**; and**

(b) Does not include[~~.~~] maintenance, repair, or replacement of parts in kind**[~~does not constitute "alteration"~~]**. [~~; however, maintenance, repair or replacement of parts in kind shall not be included in this definition.~~]

(2) "Elevator" is defined by [~~as defined in~~] KRS 198B.400(1).

Section 2. Issuance of Permits. (1) Permits to construct, install, or alter an elevator shall only be issued to a Kentucky licensed **elevator** contractor.

(2) A Kentucky licensed elevator mechanic shall not construct, install, or alter an elevator unless the work is performed under the supervision of a Kentucky licensed elevator contractor or exempt from supervision under the provisions of KRS 198B.4009(2). [~~Permit Fees for Inspection of Elevator Construction and Alteration. (1) Construction permits shall be obtained from the Office of Housing, Buildings and Construction for the installation or alteration of an elevator, except for those alterations made pursuant to the report of an inspector, and inspection fees shall be required.~~

~~(2) Fees for the inspections made incident to the permit shall be are as follows:~~

~~(a) Zero to five (5) horsepower, per unit - seventy-five (75) dollars;~~

~~(b) Six (6) to ten (10) horsepower, per unit - eighty-five (85) dollars;~~

~~(c) Eleven (11) horsepower and over, per unit - eighty-five (85) dollars, plus ten (10) dollars for each horsepower over ten (10).~~]

Section 3. Permit Required. (1) An application shall be made for a permit prior to construction, installation, or alteration of an elevator on one (1) of the following:

(a) Form EV-1, Elevator Construction and Installation Permit Application; or

(b) Form EV-2, Elevator Alteration Permit Application.

(2) An application shall be submitted to the Department of Housing, Buildings and Construction, Division of Building Code Enforcement, Elevator section before commencing elevator work requiring **a** permit.

Section 4. Passenger Elevator Construction, Installation, and Alteration Permit Fees. Permit and inspection fees for passenger elevators shall be as follows:

Horsepower (per unit)	Permit Fee
Zero (0) to five (5)	$85
Six (6) to ten (10)	$100
More than ten (10)	$100 plus $10 for each additional horsepower exceeding ten (10)

Section 5. Freight Elevator Construction, Installation**,** and Alteration Permit Fees. Permit and inspection fees for freight elevators shall be as follows:

Horsepower (per unit)	Permit Fee
Zero (0) to five (5)	$85
Six (6) to ten (10)	$100
More than ten (10)	$100 plus $10 for each additional horsepower exceeding ten (10)

Section 6. Inspection Fees. (1)(a) Each passenger elevator permit shall include two (2) inspections (one (1) final and one (1) supplemental, if necessary) at no additional cost.

(b) All passenger elevator inspections in excess of **the** two (2) provided with **the** purchase of **the** permit shall be performed at the rate of the original permit fee per inspection.

(2)(a) Each freight elevator permit shall include two (2) inspections (one (1) final and one (1) supplemental) at no additional cost.

(b) All freight elevator inspections in excess of **the** two (2) provided with **the** purchase of **the** permit shall be performed at the rate of the original permit fee per inspection.

(3) Payment for all necessary permits and inspections shall be received by the elevator section prior to final approval of an elevator construction, installation, or alteration being granted.

Section 7. Certificate of Approval. Upon the satisfactory completion of final inspection of the constructed, installed, or altered elevator, a certificate of approval shall be issued by the department.

Section 8. Expiration of Permits. An elevator **permit[**~~permits~~**]** issued pursuant to this administrative regulation shall be subject to revocation, expiration, or extension pursuant to the provisions of KRS 198B.520.

Section 9. Incorporation by Reference. (1) The following material is incorporated by reference:

(a) **"**Elevator Construction and Installation Permit Application**"**, Form EV-1, July 2011; and

(b) **"**Elevator Alteration Permit Application**"**, Form EV-2, July 2011.

(2) This material may be inspected, copied**,** or obtained, subject to applicable copyright law, at the Kentucky Department of Housing, Buildings, and Construction; 101 Sea Hero Road, Suite 100; Frankfort, Kentucky 40601-5405, Monday through Friday, 8 a.m. to 4:30 p.m.

JERRY T. LUNSFORD, Commissioner
ROBERT D VANCE, Secretary

APPROVED BY AGENCY: July 8, 2011

FILED WITH LRC: July 8, 2011 at 4 p.m.

CONTACT PERSON: Dawn M. Bellis, General Counsel, Department of Housing, Buildings and Construction, 101 Sea Hero Road, Suite 100, Frankfort, Kentucky 40601-5405, phone (502) 573-0365 ext. 144, fax (502) 573-1057.

PUBLIC PROTECTION CABINET
Department of Housing, Buildings and Construction
Division of Building Code Enforcement
(As Amended at ARRS, October 11, 2011)

815 KAR 4:030. Elevator contractor licensing requirem.

RELATES TO: KRS 198B.4003, 198B.4009, 198B.4011, 198B.4023, 198B.4025, 198B.4027**, 198B.4033**

STATUTORY AUTHORITY: KRS 198B.4011, 198B.4009

NECESSITY, FUNCTION, AND CONFORMITY: KRS 198B.4009(3) authorizes the Department of Housing, Buildings and Construction to promulgate administrative regulations necessary to implement the provisions of KRS 198B.400 to 198B.540. KRS 198B.4009(1) requires elevator contractors to be licensed**,** and KRS 198B.4011 provides the eligibility requirements to be met for issuance of an elevator contractor's license. KRS 198B.4023 authorizes the department to promulgate administrative regulations establishing the requirements for inactive license and reactivation procedures. KRS 198B.4025 establishes the continuing educations requirements for elevator licensee renewals. KRS 198B.4027 provides the minimum insurance requirements for elevator contractor licensees. **KRS 198B.4009(3) authorizes fees for the elevator licensure program to implement KRS 198B.400 through 198B.540.** This administrative regulation establishes the licensure requirements for elevator contractors.

Section 1. General Requirements. (1) Supervision. The elevator contractor shall supervise generally, and be primarily responsible for, all elevator work performed by the mechanics, employees**,** and subcontractors of the **licensee[**~~license~~**]**.

(2) Company license. A licensee who is an employee of a company and whose license represents the company shall notify the department, in writing, if the licensee ceases to represent the company or if the name of the company changes, requesting a change of information on that license and paying the change of information fee **established[**~~listed~~**]** in Section 6(5) of this administrative regulation.

Section 2. Initial Application Requirements. (1) Filing the application.

(a) An applicant seeking an elevator contractor license shall submit to the department:

1. A completed**, signed, and notarized** Elevator Contractor License Application on Form EV-3;

2. An initial license application fee of $240 for a twelve (12) month license.

a. The initial license fee may be prorated**.**

b. If prorated, the initial license fee shall not be prorated for**[**~~not~~**]** less than seven (7) months or more than eighteen (18) months**[**~~and shall expire on the final day of the applicant's birth month~~**]**;

3. Proof of applicant's experience as required by KRS **198B.4011[**~~198.4011~~**]** and this administrative regulation;

4. A recent passport-sized color photograph of the applicant; and

5. Proof of insurance as required by KRS 198B.4027.

(b) If the applicant is an employee representing a company, the applicant shall state the company name on the application form. The company may provide the insurance certificates and shall be subject to this administrative regulation.

(2) Termination of application.

(a) The initial application shall remain pending until all requirements are met, up to a period of one (1) year after the date the application is submitted.

(b) At the end of one (1) year, the application shall be void.

Section 3. Inactive License Status. (1)(a) A licensee may request that a license be placed in inactive status.

(b) A licensee shall not perform elevator contracting work while the license is inactive.

(2) An elevator contractor licensee in inactive status shall not be required to maintain insurance as required by KRS 198B.4027 or provide proof to the Department of Housing, Buildings and Construction of compliance with workers' compensation laws.

(3) A certified elevator inspector may be licensed as an elevator contractor, but shall place the **elevator contractor** license in inactive status while having an active elevator inspector certification.

(4) Performing elevator contracting work while holding an inactive license shall be grounds for revocation or suspension of all elevator licenses and certifications held by the licensee.

Section 4. Experience Requirements. An applicant for licensure shall meet the experience requirements of this section.

(1) Minimum experience. An applicant shall have the experience required by KRS **198B.4015[**~~198B.4011~~**]**.

(2) Records of experience. An applicant's experience shall be listed on the application form or included with submission of application form to the department.

(a) Proof of listed experience shall be provided by W-2s.

(b) Additional proof of experience may be requested by the department, prior to or after licensing, if the department has reason to believe that the experience shown is insufficient, falsified**,** or nonexistent.

Section 5. Renewal and Reactivation Requirements and Procedures. (1) Filing for renewal. Licenses shall be renewed each year. To renew a license, an elevator contractor shall submit to the department:

(a) A completed renewal application;

(b) A renewal fee of $240 made payable to the Kentucky State Treasurer;

(c) Proof of attendance and completion of eight (8) hours of annual continuing education prior to the application for renewal in accordance with KRS 198B.4025; and

(d) Completed continuing provider evaluation forms for each continuing education class attended.

(2) Except for a license placed in inactive status in accordance with subsection **(5)[**~~(6)~~**]** of this section, **each** application for license renewal shall be filed by each licensee no later than the last day of the licensee's birth month.

(3) **A renewal application[**~~Renewal applications~~**]** filed late, but no more than sixty (60) days after the last day of the licensee's birth month, shall be accepted, but a restoration fee, in accordance with Section **6(1)[**~~7(1)~~**]** of this administrative regulation, shall be added to the annual renewal fee.

(4) Failure to renew within sixty (60) days after the last day of the licensee's birth month shall terminate the license, and the applicant shall comply with all requirements for a new license pursuant to Section 2 of this administrative regulation for reinstate-

ment. A reinstatement fee, in accordance with Section **6(2)[**~~7(2)~~**]** of this administrative regulation, shall be added to the annual renewal fee.

(5) Inactive elevator contractor status and renewal requirements.

(a) To place the elevator contractor's license in inactive status, an elevator contractor shall pay annually an inactive status fee of $120.

(b) An inactive elevator contractor shall not secure an elevator permit, advertise, or represent himself as a qualified elevator contractor.

(c) To reactivate an elevator contractor license, the inactive elevator contractor shall pay the annual renewal fee, an additional $120, and comply with the continuing education requirements established in 815 KAR 4:050.

(6) If an initial license is for a period of less than twelve (12) months, the initial license fee shall be reduced on a pro rata basis.

(7) Continuing education requirements shall not be required for renewal**,** provided the initial license was issued within twelve (12) months of renewal

(8) The application for renewal or reactivation of a licensed elevator contractor shall be denied for incompleteness if the applicant fails to:

(a) Pay the fees required for renewal, reactivation, and restoration, if applicable;

(b) Comply with elevator contractor continuing education requirements; or

(c) Provide the current insurance certificates required by KRS 198B.4027.

Section 6. Special Service Fees. In addition to other fees required by this administrative regulation, the following fees shall also be applied:

(1) Restoration fee. The fee for renewal of expired licenses shall be fifty (50) dollars.

(2) Reinstatement fee. The fee for reinstatement of a terminated license shall be **$100[**~~one hundred (100) dollars~~**]**.

(3) Reactivation fee. The fee for reactivation of an inactive license shall be $120.

(4) Duplicate license fee. A verified lost or destroyed license shall be replaced upon payment of a ten (10) dollar fee.

(5) Change of information fee.

(a) The fee for the change of information required by Section 1(2) of this administrative regulation shall be fifteen (15) dollars.

(b) If a change of information request is simultaneous with license renewal, this fee shall not be applicable.

Section 7. Revocation or Suspension of Licenses. A license issued pursuant to this administrative regulation may be suspended or revoked by the department for any of the reasons **established[**~~stated~~**]** in KRS 198B.4033.

Section 8. Incorporation by Reference. (1) **"[**~~Form EV-3,~~**]**Elevator Contractor License Application**", Form EV-3, October 2011**,**[**~~July 2011~~**]** is**[**~~herein~~**]** incorporated by reference.

(2) This material may be inspected, copied, or obtained, subject to applicable copyright law, at the Department of Housing, Buildings and Construction, Division of Building Codes Enforcement, Elevator Section, 101 Sea Hero Road, Suite 100, Frankfort, Kentucky 40601-5405, Monday through Friday, 8 a.m. to 4:30 p.m.

JERRY T. LUNSFORD, Commissioner
ROBERT D. VANCE, Secretary

APPROVED BY AGENCY: July 8, 2011

FILED WITH LRC: July 8, 2011 at 4 p.m.

CONTACT PERSON: Dawn M. Bellis, General Counsel, Department of Housing, Buildings and Construction, 101 Sea Hero Road, Suite 100, Frankfort, Kentucky 40601-5405, phone (502) 573-0365 ext. 144, fax (502) 573-1057.

PUBLIC PROTECTION CABINET
Department Of Housing, Buildings And Construction
Division Of Building Codes Enforcement
(As Amended at ARRS, October 11, 2011)

815 KAR 4:040. Elevator mechanic licensing requirements.

RELATES TO: KRS 198B.4003, 198B.4009, 198B.4013, 198B.4023, 198B.4025

STATUTORY AUTHORITY: KRS 198B.4013, 198B.4009

NECESSITY, FUNCTION, AND CONFORMITY: KRS 198B.4009(3) authorizes the Department of Housing, Buildings and Construction to promulgate administrative regulations necessary to implement the provisions of KRS 198B.400 to 198B.540. KRS 198B.4009(1) requires elevator mechanics to be licensed and KRS 198B.4013 provides the eligibility requirements to be met for issuance of an elevator mechanic's license. KRS 198B.4023 authorizes the department to promulgate administrative regulations establishing the requirements for inactive license and reactivation procedures. KRS 198B.4025 establishes the continuing educations requirements for elevator licensee renewals. This administrative regulation establishes the licensure requirements for elevator mechanics.

Section 1. Initial Application Requirements. (1) Filing the application.**[**~~(a)~~**]** An applicant seeking an elevator mechanic license shall submit to the department:

(a)[~~1.~~**]** A completed**, signed, and notarized** Elevator Mechanic License Application on Form EV-4;

(b)[~~2.~~**]** An initial license application fee of ninety-six (96) dollars for a twelve (12) month license.

1. The initial license fee may be prorated**.**

2. If prorated, the initial license fee shall not be prorated for**[**~~not~~**]** less than seven (7) months or more than eighteen (18) months**;**

(c)[~~and shall expire on the final day of the applicant's birth month;~~

~~3.~~**]** Proof of the applicant's experience as required by KRS 198B.4013 and this administrative regulation; and

(d)[~~4.~~**]** A recent passport-sized**,** color photograph of the applicant.

(2) Termination of application.

(a) The initial application shall remain pending until all requirements are met up to a period of one (1) year after the date the application is submitted.

(b) At the end of one (1) year, the application shall be void.

Section 2. Examination Requirements. If an applicant applies for licensure under the provisions of KRS 198B.4013(2)(a), the applicant shall take and pass the examination administered in compliance with this section.

(1) The examination shall test the applicant's basic knowledge of codes, standards, and current technological and industry recommended practices with respect to the proper installation, maintenance, repair, remodeling, or alteration of elevators and elevator systems.

(2) Reasonable accommodations shall be made if necessary to provide accessibility to disabled applicants, upon request.

(3) Except as provided by subsection (7) of this section, an applicant shall successfully complete with a passing score of at least seventy (70) percent the examination known as the "Kentucky Elevator Mechanic Examination", which is developed, administered, and scored by the department or its designee.

(4)(a) A request to sit for the examination shall be made directly to the **department-approved testing facility[**~~testing facilities approved by the department~~**]**.

(b) A list of facilities and contact information shall be provided to applicants following receipt of the examination application.

(5) The cost shall not exceed $100 for the Kentucky Elevator Mechanic Examination.

(6) A passing score on the examination shall be valid for a period of two (2) years.

(7) Upon application by a testing agency, a national code group, or by an applicant for licensure, the department shall recog-

nize another examination as equivalent to the examinations administered by the board if the person or group submitting the examination demonstrates that the examinations cover the same material and require the same level of knowledge as the department's examinations.

Section 3. Experience Requirements. An applicant for licensure shall meet the experience requirements of this section.

(1) Minimum experience. An applicant shall have the experience required by KRS 198B.4013(2).

(2) Records of experience.

(a) Proof of listed experience shall be provided by W-2s or an affidavit from a licensed elevator contractor or the equivalent.

(b) Additional proof of experience may be requested by the department, prior to or after licensing, if the board has reason to believe that the experience shown is insufficient or nonexistent.

Section 4. Renewal Requirements and Procedures. (1) Filing for renewal. **Each license[**~~Licenses~~**]** shall be renewed each year. To renew a license, an elevator mechanic shall submit to the department:

(a) A completed renewal application;

(b) A renewal fee of ninety-six (96) dollars made payable to the Kentucky State Treasurer;

(c) Proof of attendance and completion of eight (8) hours of annual continuing education prior to the application for renewal in accordance with KRS 198B.4025; and

(d) Completed continuing **education** provider evaluation forms for each continuing education class attended.

(2) Except for a license **placed[**~~place~~**]** in inactive status in accordance with subsection (6) of this section, **an** application for license renewal shall be filed by each licensee no later than the last day of the licensee's birth month.

(3) A renewal fee of ninety-six (96) dollars shall be paid prior to renewal. The department shall send a renewal application to each licensee each year to be returned with the required fee.

(4) **A renewal application[**~~Renewal applications~~**]** filed late, but no more than sixty (60) days after the last day of the licensee's birth month, shall be accepted, but a restoration fee, in accordance with Section 5(1) of this administrative regulation, shall be added to the annual renewal fee.

(5) Failure to renew **by** sixty-one (61) days after the last day of the licensee's birth month shall terminate the license, and the applicant shall comply with all requirements for a new license pursuant to Section 1 of this administrative regulation for reinstatement and a reinstatement fee, in accordance with Section **5(2)[**~~5(1)~~**]** of this administrative regulation, shall be added to the annual renewal fee.

(6) Inactive elevator mechanic renewal.

(a) To place the elevator mechanic's license in inactive status, an elevator mechanic shall pay annually an inactive fee of forty-eight (48) dollars.

(b) An inactive elevator mechanic shall not perform work within the Commonwealth **if the work requires[**~~requiring~~**]** a mechanic's license.

(c) To reactivate an elevator mechanic license, the inactive elevator mechanic shall pay the annual renewal fee, an additional forty-eight (48) dollars, and comply with the continuing education requirements established in 815 KAR 4:050.

(7) If an initial license is for a period of less than twelve (12) months, the initial license fee shall be reduced on a pro rata basis.

(8) Continuing education requirements shall not be required for renewal provided the initial license was issued within twelve (12) months of renewal.

(9) The application for renewal or reactivation of a licensed elevator mechanic shall be denied for incompleteness if the applicant fails to:

(a) Pay the fees required for renewal and restoration, if applicable; or

(b) Comply with elevator mechanic continuing education requirements.

Section 5. Special Services and Fees. In addition to the other fees required by this administrative regulation, the following special fees shall also be applied:

(1) Restoration fee. The fee for renewal of expired licenses shall be twenty-five (25) dollars.

(2) Reinstatement fee. The fee for reinstatement of a terminated license shall be twenty-five (25) dollars.

(3) Reactivation fee. The fee for reactivation of an inactive license shall be forty-eight (48) dollars.

(4) Duplicate license fee. A verified lost or destroyed license shall be replaced upon payment of a ten (10) dollar fee.

Section 6. Revocation or Suspension of License. A license issued pursuant to this administrative regulation may be suspended or revoked by the board for any of the reasons stated in KRS 198B.4033.

Section 7. Incorporation by Reference. (1) **"[**~~Form EV-4,~~**]**Elevator Mechanic License Application**", Form EV-4, September**,**[**~~July~~**]** 2011 is herein incorporated by reference.

(2) This material may be inspected, copied, or obtained, subject to applicable copyright law, at the Department of Housing, Buildings and Construction, Division of Building Code Enforcement, Elevator Section, 101 Sea Hero Road, Suite 100, Frankfort, Kentucky 40601-5405, Monday through Friday, 8 a.m. to 4:30 p.m.

JERRY T. LUNSFORD, Commissioner
ROBERT D. VANCE, Secretary

APPROVED BY AGENCY: July 8, 2011

FILED WITH LRC: July 8, 2011 at 4 p.m.

CONTACT PERSON: Dawn M. Bellis, General Counsel, Department of Housing, Buildings and Construction, 101 Sea Hero Road, Suite 100, Frankfort, Kentucky 40601-5405, phone (502) 573-0365 ext. 144, fax (502) 573-1057.

PUBLIC PROTECTION CABINET
Department of Housing, Buildings and Construction
Division of Building Codes Enforcement
(As Amended at ARRS, October 11, 2011)

815 KAR 4:050. Continuing education requirements for elevator contractors and elevator mechanics.

RELATES TO: KRS 198B.030, 198B.4009, 198B.4011, 198B.4013, 198B.4023, 198B.4025

STATUTORY AUTHORITY: KRS 198B.4009(3), 198B.4023(7), **(9),** 198B.4025

NECESSITY, FUNCTION, AND CONFORMITY: KRS 198B.4023 and 198B.4025 authorize the Department of Housing, Buildings and Construction to promulgate administrative regulations, after review by the Elevator Advisory Committee, establishing continuing education requirements for elevator contractor and elevator mechanic licensees. This administrative regulation establishes requirements for continuing education for elevator contractor and mechanic licensees.

Section 1. Elevator Contractors. (1) Each elevator contractor shall provide proof of completion of **at least** eight (8) hours of continuing education prior to annual license renewal. The required continuing education shall be attended and completed within twelve (12) months prior to renewal**,** except as provided in subsection (3) of this section.

(2) Continuing education courses shall relate to one (1) or more of the following:

(a) Business;

(b) Job safety;

(c) Kentucky **[**~~adopted~~**]** codes related to elevators; or

(d) Items directly related to the elevator trade.

(3) A licensed elevator contractor who accumulates more than the eight (8) hours of continuing education required annually, may carry forward the excess credit hours into the two (2) successive educational years for the purpose of satisfying the minimum requirement for those two (2) years.

(a) Carry forward credits shall be limited to a total of twelve (12) hours.

(b) All excess credits above the total of twelve (12) hours shall remain on the licensed elevator contractor's records but shall not be carried forward.

(4) A licensed elevator contractor teaching or participating as a panel member in an approved continuing education course for **elevator licensees** **[**~~elevators~~**]** shall be granted one (1) credit hour for each fifty (50) minutes of actual instruction time. If the elevator contractor teaches the same class on multiple occasions, credit shall only be granted for one presentation of the class.

(5) Elevator contractor licensees that are a partnership, domestic corporation, or corporation other than a domestic corporation, shall designate an authorized agent to complete the licensee's annual continuing education requirements for purposes of license renewal. Written confirmation and designation of the licensee's authorized agent shall be provided to the department with application renewal.

Section 2. Elevator Mechanics. (1) Each elevator mechanic shall provide proof of completion of **at least** eight (8) hours of continuing education prior to license renewal. The required continuing education shall be attended and completed within twelve (12) months prior to renewal**,** except as provided in subsection (3) of this section.

(2) Continuing education courses shall consist of a minimum of two (2) hours on job safety. The other six (6) hours shall consist of:

(a) Kentucky **[**~~adopted~~**]** codes related to elevators;

(b) Job safety; or

(c) Items directly related to the elevator trade.

(3) A licensed elevator mechanic who accumulates more than the eight (8) hours of continuing education required annually, may carry forward the excess credit hours into the two (2) successive educational years for the purpose of satisfying the minimum requirement for those two (2) years.

(a) Carry forward credits shall be limited to a total of twelve (12) hours.

(b) All excess credits above the total of twelve (12) hours shall remain on the licensed elevator mechanic's records but shall not be carried forward.

(4) A licensed elevator mechanic teaching or participating as a panel member in an approved continuing education course for **elevator licensees** **[**~~elevators~~**]** shall be granted one (1) credit hour for each fifty (50) minutes of actual instruction time. If the elevator mechanic teaches the same class on multiple occasions, credit shall only be granted for one **(1)** presentation of the class.

Section 3. Combined Elevator Contractor and Elevator Mechanic Licenses. An individual who is a holder of both an elevator contractor and elevator mechanic license shall meet the continuing education requirements of Section 1 of this administrative regulation.

Section 4. Inactive Licenses. (1) An inactive elevator contractor or elevator mechanic shall not **be** required to complete continuing education to maintain inactive status.

(2) If the inactive licensed elevator contractor or elevator mechanic wishes to activate his or her license to the status of an active licensee, he or she shall meet the requirements of Section 1 of this administrative regulation.

(3) Excess continuing education credit hours that an elevator contractor or elevator mechanic licensee may be carrying forward shall not count towards continuing education requirements for reactivation of an inactive license.

Section 5. Terminated Licenses. (1) Except as provided in subsection (2) of this section prior to reinstatement, an individual whose contractor or mechanic license is terminated for three (3) years or less shall complete the total number of continuing education hours per year that the license has been terminated.

(2)The number of continuing education hours necessary for reinstatement shall not exceed twenty-four (24) hours.

Section 6. Continuing Education Courses. (1) All continuing education shall be completed in one (1) or more courses provided by the National Elevator Industry Educational Program, the National Association of Elevator Contractors, or **another provider** approved by the department and the Elevator Advisory Committee for elevator contractors and elevator mechanics pursuant to 815 KAR 4:060.

(2) Continuing education courses shall be offered only by the National Elevator Industry Educational Program, the National Association of Elevator Contractors, or providers approved by the department and the Elevator Advisory Committee pursuant to 815 KAR 4:060.

JERRY T. LUNSFORD, Commissioner
ROBERT D. VANCE, Secretary

APPROVED BY AGENCY: July 8, 2011

FILED WITH LRC: July 8, 2011 at 4 p.m.

CONTACT PERSON: Dawn M. Bellis, General Counsel, Department of Housing, Buildings and Construction, 101 Sea Hero Road, Suite 100, Frankfort, Kentucky 40601-5405, phone (502) 573-0365 ext. 144, fax (502) 573-1057.

PUBLIC PROTECTION CABINET
Department of Housing, Buildings and Construction
Division of Building Codes Enforcement
(As Amended at ARRS, October 11, 2011)

815 KAR 4:060. Requirements for approval of continuing education courses and providers.

RELATES TO: KRS 198B.030, 198B.4009, 198B.4011, 198B.4013, 198B.4023, 198B.4025

STATUTORY AUTHORITY: 198B.030, 198B.4009, **198B.4023(7),** 198B.4025

NECESSITY, FUNCTION, AND CONFORMITY: KRS 198B.4009**(3)** authorizes the Department of Housing, Buildings and Construction to promulgate administrative regulations necessary to implement the provisions of KRS 198B.400 to 198B.540. KRS 198B.4025 authorizes the department to promulgate an administrative regulation to establish requirements for approval of continuing education programs. This administrative regulation establishes the requirements for approval of continuing education programs in addition to those approved statutorily.

Section 1. Requirements for Continuing Educational Provider Approval. (1) For a Continuing Education Provider to be approved by the department, the applicant shall either be a:

(a) Trade Association with affiliation to the Elevator Trade;

(b) Trade school;

(c) College;

(d) Technical school;

(e) Business dedicated solely to providing continuing education and that provides at least one (1) course in each of the congressional districts quarterly;

(f) Elevator company that employs full-time training personnel to conduct continuing education programs providing continuing education for elevator mechanics only; or

(g) Elevator manufacturer or distributor that employs **[**~~a~~**]**full time training personnel to conduct continuing education programs providing continuing education for elevator mechanics only.

(2)(a) Each continuing education course provider shall register with the department as required by subsection (3) of this section before submitting course materials for department approval.

(b) Registration shall be valid for two (2) years from the date of issuance.

(3) Course providers shall register on Form EV-5, Application for Approval as a Continuing Education Course Provider for Elevator Licensure and shall include the following:

(a) Company name;

(b) Contact person;

(c) Mailing address;

(d) Email address;

(e) Telephone number; and

(f) Fax number.

(4) The department shall maintain a list of approved continuing education course providers.

(5) Each course provider shall report to the department **a[**~~any~~**]** change to the information submitted in the initial application within thirty (30) days after the change takes effect.

(6) For each course approved, the provider shall distribute a questionnaire**[**~~in the format provided by the department~~**]** to each applicant in attendance for the purpose of rating the course.

Section 2. Continuing Education Course Approval. (1) A separate application for approval shall be submitted to the department on Form EV-6, Application for Continuing Education Course for Elevator Licensure, for each course offered by the course provider.

(2)(a) **A Form EV-5,[**~~An~~**]** Application for Approval as a Continuing Education Course Provider for Elevator Licensure**,** shall be submitted only by an approved provider registered with the department.

(b) **A form EV-5, Application for Approval as a Continuing Education Course Provider for Elevator Licensure,[**~~An application~~**]** shall be submitted at least sixty (60) days prior to the course's offering.

(3) A continuing education course shall provide instruction in at least one (1) of the subject areas specified in 815 KAR 4:050, Section 1(2)(a) through (d) and Section 2(2)(a) through (c).

(4) The course application shall include the following:

(a) Name of the course;

(b) Name and registration number of the provider;

(c) A course syllabus;

(d) Name of the instructor or presenter along with his or her qualifications;

(e) The amount of actual time needed to present the course;

(f) The objectives of the course; and

(g) A statement of the practicality of the course to the elevator trade.

(5) Content changes made to the course shall require a subsequent submission to the department for review and approval **or denial**.

(6) Course approval shall be valid for two (2) years from the date of department approval.

(7)(a) The department shall issue a course number for each approved course.

(b) The course number and the provider's number shall appear on all advertisements and certificates for the course.

(8) A provider shall submit to the department a quarterly schedule including dates and locations of courses by January 1, April 1, July 1, and October 1 annually.

(9) The department shall receive notification of scheduling changes at least ten (10) working days prior to the originally scheduled course date by fax or e-mail to the Elevator Section.

(10) Cancellations.

(a) The provider shall give notice of cancellation no less than five (5) working days prior to scheduled classes unless the governor declares a state of emergency or other conditions exist that would preclude a five (5) day notification of cancellation.

(b) If a scheduled class is cancelled, the registrant shall have the option to attend a rescheduled class or receive a full refund for the cancelled class from the provider.

(c) A registrant who notifies a provider of registration cancellation prior to five (5) working days of a scheduled course may choose either a full refund or to attend a subsequent course.

(d) A provider shall not cancel a course with ten (10) or more registrants, unless it is the result of an emergency.

Section 3. Continuing Education Course Records. (1) Each registered course provider shall establish and maintain for **at least** three (3) years the following records for each approved course:

(a) Certificates of completion as provided in subsection (2) of this section;

(b) An attendance sign-in and sign-out sheet; and

(c) A course syllabus.

(2) Certificates of completion.

(a) Each registered course provider shall issue a certificate of completion for each participant who enrolled and completed an approved continuing education course.

(b) A certificate of completion shall contain the following information about the individual participant:

1. Name;
2. Address;
3. License number;
4. Date of attendance; and
5. Course completed.

(c) One (1) copy of the certificate of completion shall be:

1. Sent to the department electronically;
2. Retained on file by the provider in compliance with subsection (1) of this section of this section; and
3. Given to the participant upon completion of the course.

Section 4. Course Audits. (1) Records requested in writing by the department shall be delivered to the department within ten (10) days of the requesting date.

(2) Representatives of the department shall not be prohibited from attending an approved continuing education course to ensure that:

(a) The course meets the stated objectives; and

(b) Applicable requirements are being met.

Section 5. Disciplinary Action. Provider approval shall be revoked if the provider:

(1) Obtains, or attempts to obtain, registration or course approval through fraud, false statements, or misrepresentation;

(2) Does not provide complete and accurate information in either the initial registration or in notification of changes to the information;

(3) Advertises a course as being approved by the department prior to receiving approval; or

(4) Fails to comply with the requirements of this administrative regulation.

Section 6. Incorporation by Reference. (1) The following material is incorporated by reference:

(a) "Application for Approval as a Continuing Education Course Provider for Elevator Licensure", Form EV-5, **October[**~~July~~**]** 2011; and

(b) "Application for Continuing Education Course for Elevator Licensure", Form EV-6, **October[**~~July~~**]** 2011.

(2) This material may be inspected, copied, or obtained, subject to applicable copyright law, at the Department of Housing, Buildings and Construction, Division of Building Codes Enforcement, Elevator Section, 101 Sea Hero Road, Suite 100, Frankfort, Kentucky 40601-5405, Monday through Friday, 8 a.m. to 4:30 p.m.

JERRY T. LUNSFORD, Commissioner
ROBERT D. VANCE, Secretary

APPROVED BY AGENCY: July 8, 2011

FILED WITH LRC: July 8, 2011 at 4 p.m.

CONTACT PERSON: Dawn M. Bellis, General Counsel, Department of Housing, Buildings and Construction, 101 Sea Hero Road, Suite 100, Frankfort, Kentucky 40601-5405, phone (502) 573-0365 ext. 144, fax (502) 573-1057.

PUBLIC PROTECTION CABINET
Department Of Housing, Buildings, And Construction
Division Of Building Codes Enforcement
(As Amended at ARRS, October 11, 2011)

815 KAR 7:120. Kentucky Building Code.

RELATES TO: KRS 132.010(9), (10), 198B.010, 198B.040, 198B.050, 198B.060, 198B.080, 198B.110, 198B.260, 198B.990, 227.300, 227.550(7)

STATUTORY AUTHORITY: KRS 198B.040(7), 198B.050

NECESSITY, FUNCTION, AND CONFORMITY: KRS 198B.040(7) **and 198B.050 require[**~~requires~~**]** the Kentucky Board of Housing, Buildings and Construction to adopt and promulgate a mandatory uniform statewide building code, based on a model code, which establishes standards for construction of buildings in the state. This administrative regulation establishes the Kentucky Building Code's general provisions.

Section 1. Definitions. (1) "Board of Housing" or "board" means the Kentucky Board of Housing, Buildings**,** and Construction.

(2) "Building" is defined by KRS 198B.010(4).

(3) "Commissioner" is defined by KRS 198B.010(9).

(4) **"Department" is defined by KRS 198B.010(11)**.

(5) "Farm" means property:

(a) Located outside the corporate limits of a municipality on at least ten (10) acres;

(b) Used for purposes set forth in the definitions of "agricultural land" and "horticultural land", established in KRS 132.010(9) and (10), respectively; and

(c) Qualified by and registered with the property valuation administrator in that county.

(6)[~~(5)~~**]** "Fire Code Official" means the State Fire Marshal, fire chief, or other enforcement officer designated by the appointing authority of the jurisdiction for the enforcement of the provisions of KRS 227.300 and the Kentucky Standards of Safety as established in 815 KAR 10:060.

(7)[~~(6)~~**]** "Industrialized building system" or "building system" is defined by KRS 198B.010(16).

(8)[~~(7)~~**]** "KBC" means the Kentucky Building Code as established in this administrative regulation.

(9)[~~(8)~~**]** "Kentucky Residential Code" means the International Residential Code, 2006, as amended for application in Kentucky by 815 KAR 7:125.

(10)[~~(9)~~**]** "Kentucky Standards of Safety" means the requirements established in 815 KAR 10:060, which serve as the fire prevention code for existing buildings as well as a supplement to this code.

(11)[~~(10)~~**]** "Manufactured home" is defined by KRS 227.550(7).

(12)[~~(11)~~**]** "Modular home" means an industrialized building system, which is designed to be used as a residence and that is not a manufactured or mobile home.

[~~(12) "Department" is defined by KRS 198B.010(11)~~**]**

(13) "Ordinary repair" is defined by KRS 198B.010(19).

(14) "Single-family dwelling" or "one (1) family dwelling" means a single unit which:

(a) Provides complete independent living facilities for one (1) or more persons including permanent provisions for living, sleeping, eating, cooking, and sanitation; and

(b) Shall not be connected to any other unit or building.

(15) "Townhouse" means a single-family dwelling unit constructed in a group of three (3) or more attached units separated by property lines in which each unit extends from foundation to roof and with open space on at least two (2) sides.

(16) "Two (2) family dwelling" means a building containing not more than two (2) dwelling units that are connected.

Section 2. Administration and Enforcement of the Building Code. (1) Notwithstanding the requirements of the International Building Code 2006, the Kentucky changes established in the 2007 Kentucky Building Code shall be mandatory and shall supersede any conflicting provision of the international code.

(2)(a) Except as provided in paragraph (b) of this subsection and as superseded by the provisions of this administrative regulation and the 2007 Kentucky Building Code, the International Building Code 2006, shall be the mandatory state building code for Kentucky for all buildings.

(b) One (1) and two (2) family dwellings and townhouses shall be governed by 815 KAR 7:125.

Section 3. State Plan Review and Inspection Fees. The fees required by this section shall apply for plan review and inspection by the office.

(1) Fast track elective.

(a) A request for expedited site and foundation approval of one (1) week or less, prior to full review of the complete set of construction documents, shall be accompanied by the fee required by Table 121.3.1 in subsection (3) of this section, plus an additional fifty (50) percent of the basic plan review or inspection fee.

(b) The additional fifty (50) percent fee shall not be less than $400 and not more than $3,000.

(c) The entire fee shall be paid with the initial plan submission.

(2) New buildings.

(a) The office's inspection fees shall be calculated by:

1. Multiplying the total building area under construction by the cost per square foot of each occupancy type as listed in subsection (3) of this section; and

2. Computing the square footage by the outside dimensions of the building.

(b) The fee for buildings with multiple or mixed occupancies shall be calculated using the cost per square foot multiplier of the predominant use.

(3) Table 121.3.1, Basic Office Fee Schedule. The basic plan review or inspection fee shall be:

(a) Assembly occupancies, fourteen (14) cents;

(b) Business occupancies, thirteen (13) cents;

(c) Day care centers, thirteen (13) cents;

(d) Educational occupancies, thirteen (13) cents;

(e) High hazard occupancies, twelve (12) cents;

(f) Industrial factories, twelve (12) cents;

(g) Institutional occupancies, fourteen (14) cents;

(h) Mercantile occupancies, thirteen (13) cents;

(i) Residential occupancies, thirteen (13) cents;

(j) Storage, eleven (11) cents; or

(k) Utility and miscellaneous, eleven (11) cents.

(4) Additions to existing buildings.

(a) Plan review fees for additions to existing buildings, which shall not require the entire building to conform to the Kentucky Building Code, shall be calculated in accordance with the schedule listed in subsection (3) of this section by the measurement of the square footage of the addition, as determined by the outside dimensions of the addition.

(b) The minimum fee for review of plans under this subsection shall be $250.

(5) Change in use.

(a) Plan review fees for existing buildings in which the use group or occupancy type is changed shall be calculated in accordance with the schedule listed in subsection (3) of this section by using the total square footage of the entire building or structure under the new occupancy type as determined by the outside dimensions.

(b) The minimum fee for review of plans under this subsection shall be $250.

(6) Alterations and repairs.

(a) Plan review fees for alterations and repairs not otherwise covered by this fee schedule shall be calculated by using the lower result of:

1. Multiplying the cost for the alterations or repairs by 0.0025; or

2. Multiplying the total area being altered or repaired by the cost per square foot of each occupancy type listed in the schedule in subsection (3) of this section.

(b) The total square footage shall be determined by the outside dimensions of the area being altered or repaired.

(c) The minimum fee for review of plans under this subsection shall be $275.

(7) Specialized fees. In addition to the fees listed in subsections (1) through (6) of this section, the following fees shall be applied for the specialized plan reviews listed in this subsection:

(a) Table 121.3.9, Automatic Sprinkler Review Fee Schedule:

1. An inspection of four (4) through twenty-five (25) sprinklers shall be a fee of $150;

2. An inspection of twenty-six (26) through 100 sprinklers shall be a fee of $200;

3. An inspection of 101 through 200 sprinklers shall be a fee of $250;

4. An inspection of 201 through 300 sprinklers shall be a fee of $275;

5. An inspection of 301 through 400 sprinklers shall be a fee of $325;

6. An inspection of 401 through 750 sprinklers shall be a fee of $375; and

7. An inspection of over 750 sprinklers shall be a fee of $375 plus thirty (30) cents per sprinkler over 750.

(b) Fire detection system review fee:

1. Zero to 20,000 square feet shall be $275; and

2. Over 20,000 square feet shall be $275 plus thirty (30) dollars

for each additional 10,000 square feet in excess of 20,000 square feet.

(c) The standpipe plan review fee shall be $275. The combination stand pipe and riser plans shall be reviewed under the automatic sprinkler review fee schedule.

(d) Carbon dioxide suppression system review fee:

1. One (1) through 200 pounds of agent shall be $275; and

2. Over 200 pounds of agent shall be $275 plus five (5) cents per pound in excess of 200 pounds.

(e) Clean agent suppression system review fee:

1.a. Up to thirty-five (35) pounds of agent shall be $275; **and**

b. Over thirty-five (35) pounds shall be $275 plus ten (10) cents per pound in excess of thirty-five (35) pounds**; and**[~~.~~]

2. The fee for gaseous systems shall be ten (10) cents per cubic foot and not less than $150.

(f) Foam suppression system review fee.

1. The fee for review of a foam suppression system shall be fifty (50) cents per gallon of foam concentrate if the system is not part of an automatic sprinkler system.

2. Foam suppression system plans that are submitted as part of an automatic sprinkler system shall be reviewed under the automatic sprinkler review fee schedule.

3. The fee for review of plans under subparagraph 1 of this paragraph shall not be less than $275 or more than $1,500.

(g) The commercial range hood review fee shall be $225 per hood.

(h) Dry chemical systems review fee (except range hoods). The fee for review of:

1. One (1) through thirty (30) pounds of agent shall be $275; and

2. Over thirty (30) pounds of agent shall be $275 plus twenty-five (25) cents per pound in excess of thirty (30) pounds.

(i) The flammable, combustible liquids or gases, and hazardous materials plan review fee shall be $100 for the first tank, plus fifty (50) dollars for each additional tank and $100 per piping system including valves, fill pipes, vents, leak detection, spill and overfill detection, cathodic protection, or associated components.

(j) Boiler and unfired pressure vessel fees. Plan review fees of boiler and unfired pressure vessel installations shall be in accordance with 815 KAR 15:027.

Section 4. General. All plans shall be designed and submitted to conform to this administrative regulation.

Section 5. Incorporation by Reference. (1) The following material is incorporated by reference:

(a) "International Building Code, 2006", First Edition, International Code Council, Inc.; and

(b) "2007 Kentucky Building Code", Ninth Edition, 2007, revised August 2011 [~~December 2010~~].

(2) This material may be inspected, copied, or obtained, subject to applicable copyright law, at the Kentucky Department of Housing, Buildings and Construction, 101 Sea Hero Road, Suite 100, Frankfort, Kentucky 40601-5405, Monday through Friday, 8 a.m. to 4:30 p.m.

JERRY LUNSFORD, Chairman
ROBERT D. VANCE, Secretary

APPROVED BY AGENCY: August 15, 2011

FILED WITH LRC: August 15, 2011 at noon

CONTACT PERSON: Dawn M. Bellis, General Counsel, Department of Housing, Buildings and Construction, 101 Sea Hero Road, Suite 100, Frankfort, Kentucky 40601-5405, phone 502-573-0365, ext. 144, fax 502-573-1057.

PUBLIC PROTECTION CABINET
Department Of Housing, Buildings and Construction
Division of Heating, Ventilation and Air Conditioning
(As Amended at ARRS, October 11, 2011)

815 KAR 8:007. Kentucky Board of Heating, Ventilation, and Air Conditioning (HVAC) Contractors budget review and responsibility.

RELATES TO: KRS 198B.654, 198B.676

STATUTORY AUTHORITY: KRS 198B.654**, 198B.676**

NECESSITY, FUNCTION, AND CONFORMITY: **KRS 198B.654 requires[**~~Pursuant to KRS 198B.654,~~**]** the Kentucky Board of Heating, Ventilation, and Air Conditioning (HVAC) Contractors **to promulgate administrative regulations[**~~shall promulgate regulations~~**]** to administer the provisions of KRS 198B.650 to 198B.689. Additionally, **[**~~the Kentucky Board of HVAC Contractors is directed by~~**]** KRS 198B.676 **requires the board to promulgate administrative regulations establishing fees, requires these fees and charges to be collected into a trust and agency account in the State Treasury, and requires that all expenses incurred by the board be paid out of that trust and agency account[**~~to pay all fees and charged collected into a state and agency account in the State Treasury and to pay all expenses incurred by the board out of same trust and agency account.~~**]** This administrative regulation establishes quarterly reviews of the Division of HVAC's budget and fee schedule by the Kentucky Board of HVAC Contractors for the administration of KRS 198B.650 to 198B.689.

Section 1. Budget Review. (1) The following shall be provided at least quarterly to each member of the Kentucky Board of HVAC Contractors by the Division of HVAC:

(a) A current fiscal year detailed financial report consisting of current balances;

(b) A revenue report showing all revenue sources of the division;

(c) Expenditure summaries showing expenditures including total personnel costs and operating expenses; and

(d) Any transfers made or scheduled, either to or from the division's trust and agency funds established in KRS 198B.676.

(2) The detailed report shall be delivered to each committee member at least ten (10) business days prior to each quarterly meeting of the Kentucky Board of HVAC Contractors.

Section 2. If the division's trust fund balance exceeds $500,000:

(1) The Kentucky Board of HVAC Contractors shall:

(a) Review the division's staffing;

(b) Review the following fees:

1. Examination;

2. License; and

3. Heating, ventilation, and air conditioning permitting;

(c) Review the division's current level of service; and

(d) Recommend changes needed to maintain or improve the division's level of service and accurately balance revenues with expenditures.

(2) The division shall prepare for the Kentucky Board of HVAC Contractors' review:

(a) A staffing report detailing personnel levels, personnel costs, and personnel goals; and

(b) Fee proposals with projected effects to the division's balances from each fee.

JERRY T. LUNSFORD, Commissioner
ROBERT D VANCE, Secretary

APPROVED BY AGENCY: August 15, 2011

FILED WITH LRC: August 15, 2011 at noon

CONTACT PERSON: Dawn M. Bellis, General Counsel, Department of Housing, Buildings and Construction, 101 Sea Hero Road, Suite 100, Frankfort, Kentucky 40601-5405, phone (502)573-0365, ext. 144, fax (502)573-1057.

CABINET FOR HEALTH AND FAMILY SERVICES
Office of Health Policy
(As Amended at ARRS, October 11, 2011)

900 KAR 6:030. Certificate of need expenditure minimums.

RELATES TO: KRS **216B.015,[**~~216B.015~~**-]**216B.130, 216B.455, 216B.990(2)

STATUTORY AUTHORITY: KRS 194A.050(1), 216B.040(3)(a), 216B.130

NECESSITY, FUNCTION, AND CONFORMITY: KRS 216B.040(3)(a) authorizes the Cabinet for Health and Family Services to promulgate administrative regulations. KRS 216B.130 requires the cabinet to promulgate an administrative regulation to annually adjust expenditure minimums provided in KRS Chapter 216B. This administrative regulation provides for the adjustment of expenditure minimums for capital expenditures and major medical equipment.

Section 1. (1) The U.S. Department of Commerce, Bureau of Economic Analysis Price Indexes for Private Fixed Investment by Type shall be used in making annual adjustments to the expenditure minimums required by KRS 216B.130.

(2) The change in the price index for the twelve (12) month period ending December 31, 2010 [~~2009~~], represents **an** 0.81 [~~2.79~~] percent decrease.

Section 2. (1) The capital expenditure minimum established in KRS 216B.015(7) shall be $2,648,150 [~~$2,669,775~~].

(2) The major medical equipment minimum established in KRS 216B.015(16) shall be $2,648,150 [~~$2,669,775~~].

CARRIE BANAHAN, Executive Director
JANIE MILLER, Secretary

APPROVED BY AGENCY: August 5, 2011

FILED WITH LRC: August 8, 2011 at 11 a.m.

CONTACT PERSON: Jill Brown, Office of Legal Services, 275 East Main Street 5 W-B, Frankfort, Kentucky 40601, phone 502-564-7905, fax 502-564-7573.

CABINET FOR HEALTH AND FAMILY SERVICES
Office of Health Policy
(As Amended at ARRS, October 11, 2011)

900 KAR 6:080. Certificate of Need emergency circumstances.

RELATES TO: KRS 216B.010-216B.130, 216B.330-216B.339, 216B.455, 216B.990

STATUTORY AUTHORITY: KRS 194A.030, 194A.050, 216B.040(2)(a)1

NECESSITY, FUNCTION, AND CONFORMITY: KRS 216B.040(2)(a)1 requires the Cabinet for Health and Family Services to administer Kentucky's Certificate of Need Program and to promulgate administrative regulations as necessary for the program. This administrative regulation establishes the guidelines for alleviating an emergency circumstance for the orderly administration of the Certificate of Need Program.

Section 1. Definitions. (1) "Cabinet" is defined by KRS 216B.015(5).

(2) "Certificate of Need Newsletter" means the monthly newsletter that is published by the cabinet regarding certificate of need matters and is available on the Certificate of Need Web site at http://chfs.ky.gov/ohp/con.

(3)"Days" means calendar days, unless otherwise specified.

(4) "Emergency circumstance" means a situation that poses an imminent threat to the life, health, or safety of a citizen of the Commonwealth.

(5) "Office of Inspector General" means the office within the Cabinet for Health and Family Services that is responsible for licensing and regulatory functions of health facilities and services.

(6) "Public information channels" means the Office of Communication and Administrative Review in the Cabinet for Health and Family Services.

(7) "Public notice" means notice given through:

(a) Public information channels; or

(b) The cabinet's Certificate of Need Newsletter.

(8) "Service Area" means county unless otherwise specified in the state health plan.

(9) "State Health Plan" is defined by KRS 216B.015(27) and is incorporated by reference in 900 KAR 5:020.

Section 2. Emergency Circumstances. (1) If an emergency circumstance arises, a person may proceed to alleviate the emergency without first obtaining a certificate of need if:

(a) The person is licensed by the Office of the Inspector General or the Kentucky Board of Emergency Medical Services to provide the same or similar services necessary to alleviate the emergency;

(b) The Office of Health Policy is notified in writing within five (5) days of the commencement of the provision of the service required to alleviate the emergency; and

(c) The Office of Health Policy acknowledges in writing that it recognizes that an emergency does exist.

(2) The notice to the Office of Health Policy shall be accompanied by an affidavit and other documentation from the person proposing to provide emergency services that shall contain the following information:

(a) A detailed description of the emergency that shall include at least the following information:

1. A description of health care services that will be provided to the person or persons to whom the services will be provided, including proof of eligibility for the service;

2. A list of the providers in the service area licensed to provide the services that will be provided during the emergency; and

3. Proof that:

a. Other providers licensed in the service area to provide the service are aware of the need for the service to be provided to the person and have refused or are unable to provide the service; or

b. Circumstances exist under which the transfer of a patient to another provider licensed in the service area to provide the service would present an unacceptable risk to a patient's life, health, or safety;

(b) The steps taken to alleviate the emergency;

(c) The location or geographic service area where the emergency service is being provided; and

(d) The expected duration of the emergency.

(3) The Office of Health Policy may request additional information necessary to make its determination from the person proposing to provide emergency services before it acknowledges that an emergency circumstance does exist.

(4) If the provision of service to meet the emergency circumstance is required to continue beyond sixty (60) [~~thirty (30)~~] days from the date that the notice is filed with the cabinet, the person providing the emergency service shall file an OHP – Form 1, Letter of Intent and **the appropriate[**~~an~~**]** application for a certificate of need**, which are incorporated by reference in 900 KAR 6:055,** for the next appropriate public notice pursuant to 900 KAR 6:060. Failure to submit a Letter of Intent and an application to the Office of Health Policy shall result in the rescission of the emergency acknowledgement and generate notification to the Office of Inspector General.

(5) The person providing the emergency service may continue to alleviate the emergency circumstances without a certificate of need until:

(a) The emergency circumstance ceases to exist; or

(b) The cabinet issues a final decision to approve or disapprove the application for certificate of need.

(6) The person providing the emergency service shall notify the Office of Health Policy within ten (10) days of the date the emergency circumstance ceases and emergency services are no longer required.

CARRIE BANAHAN, Executive Director
JANIE MILLER, Secretary

APPROVED BY AGENCY: July 13, 2011

FILED WITH LRC: July 14, 2011 at noon

CONTACT PERSON: Jill Brown, Office of Legal Services, 275 East Main Street 5 W-B, Frankfort, Kentucky 40601, phone 502-564-7905, fax 502-564-7573.

DEPARTMENT FOR PUBLIC HEALTH
Division of Public Health Protection and Safety
(As Amended at ARRS, October 11, 2011)

902 KAR 15:020. Recreational vehicles.

RELATES TO: KRS Chapter 13B, 211.180(1)(c), 219.310-219.410,**[**~~and~~**]** 219.991(2)**, Chapter 318**
STATUTORY AUTHORITY: KRS 194A.050(1), 211.090(3)**, 211.180**
EFFECTIVE: July 30, 2011
NECESSITY, FUNCTION, AND CONFORMITY: KRS 211.090 requires the **secretary of the Cabinet for Health and Family Services to promulgate administrative regulations necessary for compliance with KRS 211.180. KRS 211.180(1) requires the secretary to promulgate administrative regulations to provide a safe and sanitary environment for recreational areas designated public and semipublic[**~~Secretary of the Cabinet for Health and Family Services to regulate and control matters set forth in KRS 211.180. KRS 211.180(1)(c) designates public and semipublic recreational areas as areas for which the secretary has responsibility to provide a safe and sanitary environment. The secretary is thus required to enforce the Kentucky Manufactured Home, Mobile Home, and Recreational Vehicle Community Act of 2002, KRS 219.310 to 219.410~~**]**. This administrative regulation establishes standards for community construction and layout, sanitary standards for operation, and other matters necessary to insure a safe and sanitary recreational vehicle community operation.

Section 1. Definitions. (1) "Community street" means the paved portion of a roadway between curbs or, if not paved, the surfaced area separating sites.
(2) "Exempt recreational vehicle community" means **a[**~~any~~**]** recreational vehicle community operated in accordance with KRS 219.410.
(3) [~~(2)~~] "Floodplain" means the area in a watershed that is subject to flooding at least one (1) time every 100 years.
(4) [~~(3)~~] "Recreational vehicle parking area" means that portion of the space used to park the recreational vehicle and towing vehicle, if any.
(5) [~~(4)~~] "Self-contained recreational vehicle community " means a community in which all recreational vehicle spaces are designed with water and sewer riser pipe connections that permit the parking of only self-contained recreational vehicles.
(6) [~~(5)~~] "Sewer riser pipe" means that portion of the sewer lateral **that[**~~which~~**]** extends vertically to the ground elevation and terminates at each recreational vehicle space.
(7) "Seasonal" means a consecutive period of time not to exceed ninety (90) days within a calendar year.
(8) "Special Event" is a nonroutine activity within a community not to exceed fourteen (14) consecutive days in a calendar year.
(9) "Special Event Camping" is**[**~~any~~**]** camping that is in conjunction with a special event.
(10) "Temporary" means a period of time not to exceed fourteen (14) days within a calendar year.

Section 2. Submission of Construction Plan. (1) In accordance with KRS 219.350, each Application for a **Permit, DFS-317,[**~~permit~~**]** to construct or alter a recreational vehicle community shall be submitted to the local health department.
(2) **Except as established in subsection (3) of this section, each Application for a Permit, DFS-317,[**~~Each application~~**]** shall be accompanied by a complete plan, drawn to scale, **and** submitted in triplicate, of the proposed community or alteration.
(3) If the community is located within a floodplain, the plan shall be submitted in quadruplicate.
(4) The plans shall show all existing and proposed facilities including:
(a) [~~(1)~~] The size of the area and general dimensions of the tract of land being developed;
(b) [~~(2)~~] The number, location, and size of all recreational vehicle spaces;
(c) [~~(3)~~] The area within the space planned for location of the recreational vehicle including setback distances where applicable;
(d) [~~(4)~~] The location and width of roadways, driveways, and walkways;
(e) [~~(5)~~] The number, location, and size of all off-street automobile parking spaces;
(f) [~~(6)~~] The location of the exterior area lights and the exterior electrical distribution system;
(g) [~~(7)~~] Detailed drawings of water supply if source is other than public;
(h)[~~(8)~~] Detailed drawings of sanitary station and watering station;
(i)[~~(9)~~] Detailed drawings of sewage disposal facilities, including written specifications;
(j)[~~(10)~~] Detailed drawings of refuse storage facilities;
(k)[~~(11)~~] The location and size of water and sewer lines and riser pipes;
(l)[~~(12)~~] Size and location of**[**~~any~~**]** playground area within the community, if provided; and
(m)[~~(13)~~] A separate floor plan of all service buildings and other improvements constructed or to be constructed within the recreational vehicle community, including a plumbing riser diagram.
(5) The cabinet shall provide written response to the application within thirty (30) business days.
(a) If the construction plans are not approved, the cabinet shall give the reason in writing to the person submitting the construction plans**.**
(b) Plans may be revised in response to written cabinet deficiencies and resubmitted for another review following **the procedure established in this section[**~~steps outlined in Section 2 of this regulation~~**]**.

Section 3. Location and General Layout Standards. (1) The recreational vehicle community shall be located on a well drained area, not in a floodplain. Each site shall be graded to prevent the accumulation of storm or other waters.
(2) If the location is in an area at high risk for flooding, the applicant shall:
(a) Submit an engineering study to the cabinet; and
(b) Maintain flood insurance for the site.
(3) The area of the recreational vehicle community shall be large enough to accommodate the designated number of recreational vehicle spaces, necessary streets and roadways, and parking areas for motor vehicles.
(4) Each recreational vehicle space shall be numbered and displayed in some systematic order.
(5) Each recreational vehicle space shall contain a minimum of 1,500 square feet and adequate square footage to accommodate the maximum size recreational vehicle.**[**~~A space measuring thirty (30) feet by fifty (50) feet is recommended.~~**]**
(6) Recreational vehicles shall be separated from each other and from other structures by at least fifteen (15) feet.
(7) A recreational vehicle shall be located at least twenty-five (25) feet from a public street or highway right-of-way and at least ten (10) feet from other community property boundary lines.
(8) Each parking area shall be provided with safe and convenient vehicular access from abutting public or community streets or roads to each recreational vehicle space. Alignment and gradient shall be properly adapted to topography.
(9) Access to recreational vehicle parking areas shall be designed to minimize congestion and hazards at **each[**~~their~~**]** entrance or exit and allow free movement of traffic on adjacent streets. All traffic into or out of the parking areas shall be through these entrances and exits.
(10) Each space shall abut upon a community street.
(a) For a two (2) way community street, the minimum width shall be eighteen (18) feet; and
(b) For [~~for~~] a one (1) way community street, the minimum width shall be twelve (12) feet.
(11) Community streets, driveways, and recreational vehicle parking areas shall be of all-weather construction, maintained in good condition, have natural drainage, be relatively free of dust, and be maintained free of holes.
(12) Each parking area shall provide sufficient parking and maneuvering space so that the parking, loading or maneuvering of recreational vehicles incidental to parking shall not necessitate the

use of a public street, sidewalk or right-of-way, or private ground not part of the parking area.

(13) If a community provides a playground area, the area shall be easily accessible to all community residents and shall be fenced or otherwise rendered free of traffic hazards.

Section 4. Lighting within the Community. A minimum equivalent to a 175 watt **metal halide[**~~mercury vapor~~**]** type light shall be provided at community entrances, intersections, service buildings, sanitary stations, and other areas within the community **as necessary[**~~deemed necessary by the cabinet~~**]**.

Section 5. Community Water Supply. (1) The water supply shall be potable, adequate**,** and from an approved public supply of a municipality or water district, if available.

(a) If a public water supply of a municipality or a water district is not available, the supply for the community shall be developed and approved pursuant to **401 KAR Chapter 8.**

(b)[~~applicable requirements of the Energy and Environment Cabinet~~][~~Natural Resources and Environmental Protection Cabinet~~]**[**~~; except~~**]** If a public water supply of a municipality or water district subsequently becomes available, connections shall be made to it and the community supply **provided for in paragraph (a) of this subsection** shall be discontinued.

(2) The water supply shall be capable of supplying a minimum of fifty (50) gallons per day per recreational vehicle space.

(3) Except as provided in subsection (4) of this section, each recreational vehicle community shall have at least one (1) easily accessible watering station for filling recreational vehicle water storage tanks.

(a) There shall be one (1) watering **station[**~~stations~~**]** for each fifty (50) recreational vehicle spaces or fraction thereof.

(b) Each watering station shall be protected against backflow, back-siphonage, and other means of contamination.

(c) A watering station shall be separated from a sanitary station by at least fifty (50) feet.

(4) In lieu of a watering station, individual water connections may be provided at each recreational vehicle space. Riser pipes provided for individual water-service connections shall be located and constructed to prevent damage by the parking of recreational vehicles.

(5) Water distribution lines and connections in the service buildings, sanitary stations, water stations, and at recreational vehicle spaces shall comply with KRS Chapter 318, Plumbers and Plumbing**, and 815 KAR Chapter 20**[~~the state plumbing code~~].

Section 6. Community Sewage and Waste Disposal. (1) All sewage and waste matter shall be disposed of into a public sewer system, if available.

(a) If a public sewer system is not available, disposal shall be made into a private system designed, constructed, and operated pursuant to the requirements of **401 KAR Chapter 5.**

(b)[~~the cabinet or the Energy and Environment Cabinet~~][~~Natural Resources and Environmental Protection Cabinet~~]**[**~~; except~~**]** If a public sewer system **provided for in paragraph (a) of this subsection** subsequently becomes available, connections shall be made to it and the community sewer system shall be discontinued.

(2) Except for self-contained recreational vehicle communities, each community shall provide at least one (1) sanitary station.

(a) If more than seventy-five (75) recreational vehicle spaces without sewer riser pipes are provided, additional sanitary stations shall be required at the ratio of one (1) station for each seventy-five (75) recreational vehicle spaces without sewer riser pipes or fraction thereof.

(b) **A sanitary station shall:**

1.[~~Sanitary stations shall~~**]** Consist of at least a trapped four (4) inch sewer riser pipe connected to the community sanitary sewer system**; and**

2.[~~and~~][~~,~~] Be surrounded at the inlet end by a concrete apron sloped to the drain. [~~,~~]

(c) The riser **shall be** provided with a suitable hinged cover**,** and the area around the station shall be sloped to drain the surface water away.

(d) A water outlet shall be included to permit sanitary maintenance of the station and be marked **in three (3) inch block letters in a contrasting color**: "This Water for Flushing and Cleaning Purposes Only."

(e) The water outlet hose shall be reel or tower mounted to insure sanitary storage when not in use.

(f) A vacuum breaker shall be installed at the highest point on the reel or tower mounting.

(3) If facilities for individual sewer riser pipes are provided, the following requirements shall apply:

(a) The sewer riser pipe shall have at least a four (4) inch diameter and shall be located on the recreational vehicle space so that the sewer riser pipe to the recreational vehicle drain outlet **shall[**~~will~~**]** approximate a vertical position; and [~~.~~]

(b) Provision shall be made for capping the sewer riser pipe when a recreational vehicle does not occupy the space. Surface drainage shall be diverted away from the riser.

(4) Sewer system~~s~~ connections in recreational vehicle communities shall comply with KRS Chapter 318, Plumbers and Plumbing**, and 815 KAR Chapter 20**[~~the state plumbing code~~].

Section 7. Storage, Collection**,** and Disposal of Community Refuse. (1) The storage, collection**,** and disposal of refuse in the community area shall be conducted to not create a health, safety**,** or fire hazard;[~~,~~] rodent harborage;[~~,~~] insect breeding area; or cause air pollution.

(2) Refuse shall be stored in flytight, watertight, rodent proof common containers. Common containers shall be provided at the ratio of one (1) container per two (2) recreational vehicle spaces and in additional numbers as may be necessary to properly store refuse.

(3) Refuse collection stands shall be provided for refuse containers with less than thirty-five (35) gallons capacity. Stands shall be designed to prevent containers from being tipped, to minimize spillage and container deterioration, and to facilitate cleaning around them.

(4) Refuse containing garbage shall be collected at least once a week or more often if necessary.

(a) If suitable collection service is not available from a municipal or private agency, the owner or operator of the community shall provide this service.

(b) Refuse shall be collected and transported in covered, leakproof containers or vehicles.

(5) Refuse and waste collected at a community shall be disposed in a safe and sanitary manner **[**~~approved by the Energy and Environment Cabinet~~**]**[~~Natural Resources and Environmental Protection Cabinet~~] in accordance with 401 KAR Chapter 47.

Section 8. Community Service Buildings. (1) Except for self-contained recreational vehicle communities, each community shall provide one (1) or more central service buildings containing the necessary toilet and other plumbing fixtures specified by the **State Plumbing Code, 815 KAR Chapter 20[**~~Plumber's and Plumbing KRS Chapter 318~~][~~State Plumbing Code~~].

(2) A service building shall be conveniently located within a radius of approximately 500 feet of the spaces to be served**.** [~~; except that~~]A variance **shall[**~~may~~**]** be granted by the cabinet **if topography or[**~~due to topography and~~**]** other geographical conditions **warrant**.

(3)[~~(2)~~] A service building shall be constructed and maintained pursuant to the requirements of the State Building Code**, 815 KAR 7:120**.

(4)[~~(3)~~] A room containing sanitary or laundry facilities shall have:

(a) Every opening to the outer air effectively screened and each door provided with a spring or other self-closing device;

(b) Illumination levels maintained as follows:

1. General visual tasks**:[-]** ten (10) foot-candles;

2. Laundry room work area**:[-]** forty (40) foot-candles; and

3. Toilet room, in front of mirrors**:[-]** forty (40) foot-candles;

(c) Hot and cold water furnished to every lavatory, sink, shower**,** and laundry fixture, and cold water furnished to every water closet and urinal;

(d) Walls, floors, ceilings, [~~and~~] attached or freestanding fix-

tures, and equipment maintained in good repair and sanitary. Surfaces shall not consist of carpeting or**[**~~any~~**]** material that is not smooth and easily cleanable**;[**~~.~~**]**

(e) Refuse stored in easily cleanable containers;

(f) Sanitary towels or a mechanical hand drying device located adjacent to the lavatories; and

(g) A covered waste receptacle for each toilet room stall used by women.

Section 9. Insect, Rodent, Pest, and Pet Control within the Community. (1) Grounds, buildings, and structures shall be maintained free of insect and rodent harborage and infestation. Approved extermination methods and other measures to control insects and rodents shall be used.

(2) Communities shall be maintained free of accumulations of debris **that could[**~~which may~~**]** provide rodent harborage or breeding places for flies, mosquitoes, **or[**~~and~~**]** other pests.

(3) Storage areas shall be maintained to prevent rodent harborage. Lumber, pipe, and other building materials shall be stored at least one (1) foot above the ground.

(4) If the potential for insect and rodent infestation exists, all exterior openings in or beneath **a[**~~any~~**]** structure shall be appropriately screened with wire mesh or other suitable materials.

(5) The growth of brush, weeds, and grass shall be controlled to prevent harborage of ticks, chiggers, and noxious insects within the area used for the parking of recreational vehicles.

(6) Communities shall be maintained to prevent the growth of ragweed, poison ivy, poison oak, poison sumac, and other noxious weeds considered detrimental to health. Open areas shall be maintained free of heavy undergrowth**[**~~of any description~~**]**.

(7)[~~(6)~~] An owner or person in charge of a dog, cat, or other pet**[**~~animal~~**]** shall not permit the animal to run at large or to create a nuisance within the limits of the community.

Section 10. Community Electrical Distribution Systems. Every community shall contain an electrical system consisting of wiring, fixtures, equipment, and appurtenances installed and maintained pursuant to the requirements of the **Public Protection[**~~Energy and Environment~~**]** Cabinet[~~Public Protection and Regulation Cabinet~~].

Section 11. Community Fire Protection. Each community shall comply with applicable rules and administrative regulations of the State Fire Marshal and applicable local fire codes pertaining to **Standards of Safety, 815 KAR 10:060[**~~fire safety~~**]**, fuel supply storage, and fuel connections.

Section 12. Community Maintenance and Registration of Occupants and Vehicles. (1) The permit holder shall maintain the community, its facilities, and equipment in good repair and in a clean and sanitary condition.

(2) Every permittee shall maintain a register showing the following:

(a) The names and permanent addresses of all recreational vehicle occupants;

(b) The make, model, and license number of the recreational vehicle or the tow vehicle; and

(c) The dates of arrival and departure of the recreational vehicle or its occupants.

(3) The register shall be available to an authorized person inspecting the recreational vehicle parking area.

(4) An owner or operator of a self-contained recreational vehicle community shall not permit the parking of a dependent recreational vehicle within the self-contained recreational vehicle community.

(5) An owner or operator of a recreational vehicle community shall not construct, install, or attach, or permit the construction, installation, or attachment of a lean-to, deck, addition, or other permanent or semipermanent structure upon a recreational vehicle or recreational vehicle space, except that a collapsible awning or screened enclosure mounted upon or transported with the recreational vehicle may be permitted.

Section 13. Communities Constructed prior to June 16, 1973. A recreational vehicle community in existence on June 16, 1973, **shall[**~~the effective date of former Regulation MRP-2, may~~**]** be eligible for a permit to operate notwithstanding that the community does not fully meet the design and construction requirements of this administrative regulation, if:

(1) The cabinet determines that the community can be operated in a safe and sanitary manner pursuant to the operational requirements of this administrative regulation; and

(2) The community has a service building, sanitary station, safe water supply, adequate sewage, and solid waste disposal, and does not create a nuisance.

Section 14. Special Event Camping. A recreational community shall notify the local health department of **the[**~~their~~**]** intention to operate at least twenty (20) days prior to each special event.

Section 15.[~~14.~~] Inspection of Communities. (1) At least once every twelve (12) months, the cabinet shall inspect each community and shall make as many additional inspections and reinspections as are necessary for the enforcement of this administrative regulation.

(2) Special event camping communities shall be inspected and reinspected daily or with sufficient frequency to ensure enforcement of this administrative regulation and to protect public health.

(3)[~~(2)~~] An inspector shall record inspection findings on an official cabinet report form, DFS 318, **Mobile Home and Recreational Vehicle Park Inspection Report,** and shall provide the permit holder or operator with a copy. The inspection report shall:

(a) Set forth the specific violations if found;

(b) Establish a specific and reasonable period of time for the correction of the violations found; and

(c) State that failure to comply with **a[**~~any~~**]** notice issued pursuant to the provisions of this administrative regulation **shall subject the permit to consideration for[**~~may result in~~**]** suspension or revocation of the permit.

Section 16.[~~15~~] Suspension of Permits. (1) **The cabinet shall address penalties, including permit suspension and revocation, in accordance with KRS 219.380(2) and 219.991(2)[**~~In addition to penalties established in KRS 219.991(2), the cabinet may suspend or revoke a permit [,] in accordance with KRS 219.380(2)~~**]**.

(2) [~~(1)~~] The cabinet shall, upon notice to the permit holder, immediately suspend
the permit if:

(a) There is reason to believe that an imminent public health hazard exists; or

(b) The holder or an employee has interfered with the cabinet in the performance of its duties.

(3) [~~(2)~~] In all other instances of violation of the provisions of this administrative regulation, the cabinet shall:

(a) Serve on the permit holder or his designee a written notice specifying the violation; and

(b) Afford the holder a reasonable opportunity for correction.

(4) [~~(3)~~] The cabinet shall notify, in writing, the permit holder or operator who fails to comply with a written notice issued under the provisions of this section, that the permit shall be suspended at the end of ten (10) days following service of the notice.

Section 17.[~~16.~~] Reinstatement of Suspended Permits. (1) A person whose permit has been suspended may**[**~~, at any time,~~**]** make application for a reinspection for the purpose of reinstatement of the permit.

(2) Within ten (10) days following receipt of a written request, including a statement signed by the applicant that in his opinion the conditions causing suspension of the permit have been corrected, the cabinet shall make a reinspection.

(3) If the applicant is found to be in compliance with the requirements of this administrative regulation, the permit shall be reinstated.

Section 18.[~~17.~~] Revocation of Permits. (1) A permit shall be permanently revoked for:

(a) Serious [~~serious~~] or repeated violations of a requirement of this administrative regulation; or

(b) Interference with an agent of the cabinet in the performance of his duties.[~~or her~~]**[.]**

(2) Prior to the action, the cabinet shall notify the permit holder or his designee, in writing, stating the reasons for which the permit is subject to revocation and advising that the permit shall be permanently revoked at the end of ten (10) days following service of the notice.

Section 19.[~~18.~~] Permit Renewal. (1) A permit to operate a recreational vehicle community shall be renewed annually, in the month of July. A permit fee shall be assessed pursuant to 902 KAR 45:120, Section 2(2).

(2) Exempt recreational vehicle communities shall register with the cabinet or its agents. Required information for registration shall be the:

(a) Name of community;

(b) Name of owner; and

(c) Dates the recreational community will be operation.

(3) [~~(2)~~] If the cabinet or its agent is on notice that a recreational vehicle community is in violation of another agency's lawful requirement, the permit shall not be renewed until the permit holder or his designee demonstrates to the cabinet or its agent that the violation has been corrected.

Section 20.[~~19.~~] Appeals. (1) A permit holder, his designee, or an applicant aggrieved by a decision of the cabinet may request a conference or administrative hearing. The request shall be submitted within ten (10) days of receipt of a written notice of:

(a) A violation;

(b) Suspension or revocation of a permit;

(c) Denial to renew a permit; or

(d) Denial of an initial application.

(2) Conference hearings.

(a) A conference hearing shall be conducted in accordance with 902 KAR 1:400, Administrative hearings, with the following exceptions:

1. The conference hearing shall be less formal than an administrative hearing;

2. The matter at issue shall be discussed before a representative of the Department for Public Health; and

3. Participants in the discussion shall be:

a. An agent of the cabinet; and

b. The permit holder, his designee, or the applicant.

(b) A request for a conference hearing shall be:

1. In writing; and

2. Submitted or addressed to the cabinet's agent at the local health department that issued or gave notice of the violation, suspension, or revocation.

(c) A permit holder, his designee, or an applicant who does not agree with the conference report issued after the conference hearing may appeal by requesting an administrative hearing.

(3) Administrative hearing.

(a) A request for an administrative hearing shall **indicate waiver of[**~~waive~~**]** the right to request a conference hearing.

(b) The administrative hearing shall be conducted in accordance with 902 KAR 1:400, Administrative hearings.

(c) A request for an administrative hearing shall be:

1. In writing;

2. Submitted or addressed to the Commissioner, Department for Public Health, 275 East Main Street, Frankfort, Kentucky 40621; and

3. Accompanied by a copy of the notice of violation, notice to suspend or revoke, letter denying an application, or the conference hearing report.

Section 21. Exceptions. Exempt recreational vehicle communities as defined in KRS 219.410 **shall not be subject to this administrative regulation[**~~are not subject to the regulations outlined in Sections two (2) through twenty (20)~~**]** unless indicated otherwise within this **administrative** regulation.

Section 22. Variance. The owner of a site where special event camping or campground is proposed to be installed may request, in writing, from the local board of health or its designated agent, a variance to the requirements included within this administrative regulation.

(1) A written request for variance shall include:

(a) Pertinent information about the site including a detailed site plan;

(b) The specific portion of the administrative regulation requested for waiver;

(c) The specific reasons for the request; and

(d) Documents, drawings, specifications**,** and other evidence of compliance with **[**~~the intent of~~**]** this **administrative** regulation through alternative means that support the granting of the variance.

(2) A request for variance shall be acted upon by the local board of health**[**~~,~~**]** or its designated agent within ten **(10)** business days of receipt of the request.

(a) A written decision on the request shall be presented to the applicant within five (5) business days of the decision.

(b)1. The variance may be granted with stipulations**.**

2. If the variance is granted with stipulations, the stipulations shall[~~and, if so, are to~~**]** be included in the decision notice.

(3) An applicant for a variance may appear before the local board of health or it's agent for the purpose of presenting the request or to appeal a decision.

(4) If a hearing on the variance request or decision is requested, the local board of health or it's agent shall:

(a) Set a time and date for the hearing within ten (10) business days of the request; and

(b) Notify the applicant, in writing, within five (5) business days of receipt of the request and at least two (2) days prior to the date of hearing, of the time and date for the hearing.

(5) A decision regarding a variance shall be based upon evidence presented by:

(a) The applicant; and

(b) The local health department representative; or

(c) **An** expert professional **witness[**~~witnesses~~**].**

(6) A decision regarding a variance shall be considered **in accordance with[**~~by~~**]**:

(a) The requirements of 902 KAR 15:020, KRS 219.310 to 219.410 and related laws; and

(b) The presence or absence of reasonable assurance, derived from evidence presented, that the granting of the variance shall not result in the creation of:

1. A public health hazard; or

2. A public health nuisance.

Section **23. Incorporation by Reference. (1) The following material is incorporated by reference:**

(a) "Application for a Permit", DFS-317, May 1991; and

(b) "Mobile Home and Recreational Vehicle Park Inspection Report", DFS-318, September 1996.[~~22.~~**]**[~~(20)~~]**[**~~Incorporation by Reference. (1) The following material is incorporated by reference: "DFS-317, Application for a Permit"; "DFS-318, Mobile Home and Recreational Vehicle Park Inspection Report".~~**]**

(2) This material may be inspected, copied, or obtained, subject to applicable copyright law, at the Department for Public Health, 275 East Main Street, Frankfort, Kentucky 40621[~~40602~~], Monday through Friday, 8 a.m. to 4:30 p.m.

WILLIAM D. HACKER, M.D., FAAP, CPE, Commissioner
JANIE MILLER, Secretary

APPROVED BY AGENCY: June 28, 2011

FILED WITH LRC: June 30, 2011 at 4 p.m.

CONTACT PERSON: Jill Brown, Office of Legal Services, 275 East Main Street 5 W-B, Frankfort, Kentucky 40601, phone (502)564-7905, fax (502) 564-7573.

CABINET FOR HEALTH AND FAMILY SERVICES
Department for Public Health
Division of Public Health Protection and Safety
(As Amended at ARRS, October 11, 2011)

902 KAR 100:019. Standards for protection against radiation.

RELATES TO: KRS 211.842-211.852, 211.990(4), 10 C.F.R.

20.1001-20.1906, 20.2101-20.2204, 20.2206, Appendixes A, B-20.1001-20.2401, 40 C.F.R. 190, 49 C.F.R. 100-180, 173.403(m),(w), 173.421-173.424

STATUTORY AUTHORITY: KRS**[**~~13B.170,~~**]** 194.050, 211.090, 211.844, 10 C.F.R. 10.1001-20.1906, 20.2101-20.2204, 20.2206, Appendixes A, B-20.1001-20.2401, 40 C.F.R. 190, 49 C.F.R. 100-180, 49 C.F.R. 173.403(m),(w), 173.421-173.424, [~~EO 96-862~~]

NECESSITY, FUNCTION, AND CONFORMITY: [~~Executive Order 96-862, effective July 2, 1996, reorganizes the Cabinet for Human Resources and places the Department for Public Health and its programs under the Cabinet for Health Services.~~] KRS 211.844 requires [~~authorizes~~] the Cabinet for Health and Family Services to provide by administrative regulation for the registration and licensing of the possession or use of sources of ionizing or electronic product radiation and the handling and disposal of radioactive waste. This administrative regulation **establishes[**~~provides~~**]** standards for the protection of the user and general public against radiation exposure and [~~shall~~] establishes [~~establish~~] standards for protection against ionizing radiation resulting from activities conducted by persons issued licenses or registrations by the cabinet. This administrative regulation **establishes[**~~provides~~**]** standards to control the receipt, possession, use, transfer, and disposal of sources of radiation by a person, licensee, or registrant so the total dose to an individual (including doses resulting from licensed and unlicensed radioactive material and radiation sources other than background radiation) shall not exceed the standards for protection against radiation prescribed in this administrative regulation. [~~902 KAR 100:020 and 902 KAR 100:025 are repealed due to the promulgation of new radiation standards by the U.S. Nuclear Regulatory Commission in 10 C.F.R. 20.~~]

Section 1. Radiation Protection Implementation. (1) This administrative regulation shall not limit actions required in order to protect against an immediate danger to public health and safety.

(2) This administrative regulation shall apply to a person licensed or registered by the cabinet to receive, possess, use, transfer, or dispose of sources of radiation.

(3) The limits in this administrative regulation shall not apply to doses due to background radiation, exposure of patients to radiation for the purpose of medical diagnosis or therapy, or voluntary participation in medical research programs.

Section 2. Radiation Protection Programs. A person, licensee, or registrant shall:

(1) Develop, document, and implement a radiation protection program commensurate with the scope and extent of the person's [~~their~~] activities and sufficient to ensure compliance with the provisions of this administrative regulation**;[**~~.~~**]**

(2) Use procedures and engineering controls based upon sound radiation protection principles, to the extent practical, to achieve occupational doses and doses to members of the public that shall be as low as reasonably achievable (ALARA) pursuant to 902 KAR 100:015, Section 2**;[**~~.~~**]**

(3) Annually review the radiation protection program content and implementation**; and[**~~.~~**]**

(4) Establish a constraint on air emissions of radioactive material to the environment, excluding radon-222 and its daughters, to implement the ALARA requirements of subsection (2) of this section and [~~in addition to~~] the requirements of Section 10 of this administrative regulation.

(a) Any constraint shall ensure that the highest dose that could be received by a person shall not exceed a dose in excess of ten (10) millirems (0.1 mSv) per year [~~These constraints shall be established so that the individual member of the public likely to receive the highest dose will not be expected to receive a total effective dose equivalent in excess of ten (10) millirems (0.1 mSv) per year from these emissions~~].

(b) A licensee, if required to establish these constraints, shall report any [~~an~~] exceedance as provided in Section 40 of this administrative regulation and take appropriate corrective action to ensure against recurrence.

Section 3. Occupational Dose Limits for Adults. (1) A person, licensee, or registrant shall control the occupational dose to individual adults, except for planned special exposures as described in Section 7 of this administrative regulation, to the following dose limits:

(a) An annual limit, which shall be the more limiting of the:

1. Total effective dose equivalent being equal to five (5) rems **(0.50 Sv); and[**~~(0.05 sievert (Sv)); or~~**]**

2. Sum of the deep-dose equivalent and the committed dose equivalent to an individual organ or tissue**,** other than the lens of the eye**,** being equal to fifty (50) rems ([~~five-tenths~~] (0.50) Sv).

(b) The annual limits to the lens of the eye, the skin, and the extremities**, which** shall be:

1. A lens [~~An eye~~] dose equivalent of fifteen (15) rems (0.15 Sv); and

2. A shallow-dose equivalent of fifty (50) rems (five-tenths (0.50) Sv) to the skin of the whole body or to the skin of an [~~each of the~~] extremity [~~extremities~~].

(2) Doses received in excess of the annual limits, including doses received during accidents, emergencies, and planned special exposures, shall be subtracted from the limits for planned special exposures that the individual may receive during the current year and during the individual's lifetime as described in Section 7(3)(a) and (b) of this administrative regulation.

(3) The assigned deep-dose equivalent and shallow-dose equivalent shall be for the part of the body receiving the highest exposure. The assigned shallow dose equivalent shall be the dose averaged over the contiguous ten (10) square centimeters of skin receiving the highest exposure. If the individual monitoring device was not in the region of highest potential exposure**,[**~~, or the results of individual monitoring are unavailable,~~] the deep-dose equivalent, lens [~~eye~~] dose equivalent, and shallow-dose equivalent may be assessed from surveys or other radiation measurements for the purpose of demonstrating compliance with the occupational dose limits.

(4) Derived air concentration (DAC) and annual limit on intake (ALI) values are **established[**~~specified~~**]**[~~are presented~~] in 10 C.F.R., 20**, Appendix B, Table 1,[**~~Appendix 13~~][~~Section 44 of this administrative regulation~~] and shall be used to:

(a) Determine the individual's dose as required in Section 34 of this administrative regulation; and

(b) Demonstrate compliance with the occupational dose limits.

(5) In addition to the annual dose limits, the person, licensee, or registrant shall limit the soluble uranium intake by an individual to ten (10) milligrams in a week in consideration of chemical toxicity as **established[**~~described~~**]** in 10 C.F.R., 20 Appendix B [~~(see footnote 3 in Section 44 of this administrative regulation)~~].

(6) A person, licensee, or registrant shall reduce the dose that an individual may be allowed to receive in the current year by the amount of occupational dose received while employed by a person as described in Section 32 of this administrative regulation.

Section 4. Compliance with Requirements for Summation of External and Internal Doses. (1) If a licensee or registrant is required to monitor by both Section 13(1) and (2) of this administrative regulation, the licensee or registrant shall demonstrate compliance with the dose limits by summing external and internal doses.

(2) If a licensee or registrant is required to monitor only by Section 13(1) or (2) of this administrative regulation, summation shall not be required to demonstrate compliance with the dose limits.

(3) A licensee or registrant may demonstrate compliance with the requirements for summation of external and internal doses by meeting one (1) of the conditions specified in subsection (5) of this section and the conditions in subsections (6) and (7) of this section.

(4) The dose equivalents for the lens of the eye, the skin, and the extremities shall not be included in the summation[~~,~~] but shall be subject to separate limits **established in Section 3 of this administrative regulation**.

(5) If the only intake of radionuclides occurs by inhalation, the total effective dose equivalent limit shall not be exceeded if the sum of the deep-dose equivalent divided by the total effective dose equivalent limit, and one (1) of the following, does not exceed unity:

(a) Sum of the fractions of the inhalation ALI for each radionuclide;

(b) Total number of derived air concentration-hours (DAC-hours) for radionuclides divided by 2,000; or

(c) Sum of the calculated committed effective dose equivalents to significantly irradiated organs or tissues (T) calculated from bioassay data using appropriate biological models and expressed as a fraction of the annual limit.

(6) If the occupationally exposed individual also receives an intake of radionuclides by oral ingestion greater than ten (10) percent of the applicable oral ALI, the licensee or registrant shall account for this intake and include it in demonstrating compliance with the limits.

(7) A licensee or registrant shall evaluate and, to the extent practical, account for intakes through wounds or skin absorption. The intake through intact skin has been included in the calculation of DAC for hydrogen-3 and may not need to be further evaluated.

Section 5. Determination of External Dose from Airborne Radioactive Material. (1) If determining the dose from airborne radioactive material, a licensee or registrant shall include the contribution to the deep-dose equivalent, lens [~~eye~~] dose equivalent, and shallow-dose equivalent from external exposure to the radioactive cloud.

(2) If the airborne radioactive material includes radionuclides other than noble gases or the cloud of airborne radioactive material is not relatively uniform, airborne radioactivity measurements and DAC values shall not be used as the primary means to assess the deep-dose equivalent.

(3) The determination of the deep-dose equivalent to an individual shall be based upon measurements using instruments or individual monitoring devices.

Section 6. Determination of Internal Exposure. (1) For purposes of assessing dose used to determine compliance with occupational dose equivalent limits, the licensee or registrant shall, if required by Section 13 of this administrative regulation, take suitable and timely measurements of:

(a) Concentrations of radioactive materials in the air in work areas;

(b) Quantities of radionuclides in the body;

(c) Quantities of radionuclides excreted from the body; or

(d) Combinations of these measurements.

(2) A licensee or registrant shall assume an individual inhales radioactive material at the airborne concentration in which the individual is present, unless respiratory protective equipment is used, as provided in Section 19 of this administrative regulation, or the assessment of intake is based on bioassays.

(3) If specific information on the physical and biochemical properties of the radionuclides taken into the body, or the behavior or material in an individual is known, a licensee or registrant may:

(a) Use the information to calculate the committed effective dose equivalent**,[**[~~;~~] and, if used, the licensee or registrant shall document the information in the individual's record;

(b) Upon prior approval by the cabinet, adjust the DAC or ALI values to reflect the actual physical and chemical characteristics of airborne radioactive material (for example, aerosol size distribution or density); and

(c) Separately assess the contribution of fractional intakes of Class D, W, or Y compounds of a radionuclide, as provided in 10 C.F.R., 20 Appendix A [~~Section 44 of this administrative regulation~~], to the committed effective dose equivalent.

(4) If a licensee or registrant chooses to assess intakes of Class Y material using the measurements provided in subsection (1)(b) or (c) of this section, the licensee or registrant may delay the recording and reporting of the assessments for periods up to seven (7) months, unless otherwise required by Section 39 or 40 of this administrative regulation, in order to permit the licensee or registrant to make additional measurements basic to the assessments.

(5) If the identity and concentration of radionuclides in a mixture are known, the fraction of the DAC applicable to the mixture for use in calculating DAC-hours shall be the:

(a) Sum of the ratios of the concentration to the appropriate DAC value (**[**~~e.g.,~~**]**D, W, Y) from 10 C.F.R., 20 Appendix B**,**[~~Section 44 of this administrative regulation~~] for radionuclides in the mixture; or

(b) Ratio of the total concentration for radionuclides in the mixture to the most restrictive DAC value for a radionuclide in the mixture.

(6) If the identity of radionuclides in a mixture is known, but the concentration of one (1) or more of the radionuclides in the mixture is not known, the DAC for the mixture shall be the most restrictive DAC of a radionuclide in the mixture.

(7) If a mixture of radionuclides in air exists, a licensee or registrant may disregard certain radionuclides in the mixture if the:

(a) Licensee or registrant uses the total activity of the mixture in demonstrating compliance with the dose limits in Section 3 of this administrative regulation and in

complying with the monitoring requirements in Section 13(2) of this administrative regulation;

(b) Concentration of a disregarded radionuclide is less than ten (10) percent of its DAC; and

(c) Sum of these percentages for the disregarded radionuclides in the mixture does not exceed thirty (30) percent.

(8) In order to calculate the committed effective dose equivalent, a licensee or registrant may assume that the inhalation of one (1) ALI[~~,~~] or an exposure of 2,000 DAC-hours[~~,~~] results in a committed effective dose equivalent of five (5) rems (0.05 Sv) for radionuclides having their ALIs or DACs based on the committed effective dose equivalent.

(a) If the ALI[~~,~~] and the associated DAC[~~,~~] are [~~is~~] determined by the nonstochastic organ dose limit of fifty (50) rems (five-tenths (0.50) Sv), the intake of radionuclides that result in a committed effective dose equivalent of five (5) rems (0.05 Sv) (the stochastic ALI) is listed in parentheses in 10 C.F.R., 20 Appendix B [~~Section 44 of this administrative regulation~~]. A licensee or registrant may, as a simplifying assumption, use the stochastic ALIs to determine committed effective dose equivalent.

(b) If a licensee or registrant uses the stochastic ALIs, the licensee or registrant shall also demonstrate that the limit in Section 3(1)(a)2 of this administrative regulation is [~~shall be~~] met.

Section 7. Planned Special Exposures. (1) A licensee or registrant may authorize an adult worker to receive doses in addition to, and accounted for separately from the doses received under, the limits specified in Section 3 of this administrative regulation provided each of the following conditions are satisfied:

(a) The licensee or registrant authorizes a planned special exposure only in an exceptional situation if alternatives that may avoid the dose estimated to result from the planned special exposure [~~higher exposure~~] are unavailable or impractical;

(b) The licensee or registrant, and employer if the employer is not the licensee or registrant, specifically authorize the planned special exposure, in writing, before the exposure occurs;

(c) Before a planned special exposure, the licensee or registrant ensures that the individuals involved are:

1. Informed of the purpose of the planned operation;

2. Informed of the estimated doses and associated potential risks and specific radiation levels or other conditions that may be involved in performing the task; and

3. Instructed in the measures to be taken to keep the dose ALARA considering other risks that may be present.

(2) Prior to permitting an individual to participate in a planned special exposure, a licensee or registrant shall ascertain prior doses as required by Section 32(2) of this administrative regulation during the lifetime of the individual for each individual involved.

(3) Subject to Section 3(2) of this administrative regulation, a licensee or registrant shall not authorize a planned special exposure that shall cause an individual to receive a dose from planned special exposures and doses in excess of the limits to exceed:

(a) The numerical values of the dose limits in Section 3(1) of this administrative regulation in a year; and

(b) Five (5) times the annual dose limits in Section 3(1) of this administrative
regulation during the individual's lifetime.

(4) A licensee or registrant shall:

(a) Maintain records of the conduct of a planned special exposure pursuant to

Section 33 of this administrative regulation; and

(b) Submit a written report pursuant to Section 41 of this administrative regulation.

(5) A licensee or registrant shall record the best estimate of the dose resulting from the planned special exposure in the individual's record and inform the individual, in writing, of the dose within thirty (30) days from the date of the planned special exposure. The dose from planned special exposures shall not be considered in controlling future occupational dose of the individual by Section 3(1) of this administrative regulation[,] but shall be included in evaluations required by Section 7(2) and (3) of this administrative regulation.

Section 8. Occupational Dose Limits for Minors. The annual occupational dose limits for minors shall be ten (10) percent of the annual dose limits specified for adult workers in Section 3 of this administrative regulation.

Section 9. Dose Equivalent to an Embryo or Fetus. (1) A licensee or registrant shall ensure that the dose equivalent to an embryo or fetus during the entire pregnancy, due to occupational exposure of a declared pregnant woman, does not exceed five-tenths (0.5) rem (5 mSv). Recordkeeping requirements are **established[**~~provided~~**]** in Section 42 of this administrative regulation.

(2) A licensee or registrant shall make efforts to avoid substantial variation above a uniform monthly exposure rate to a declared pregnant woman to satisfy the limit in subsection (1) of this section.

(3) The dose equivalent to an embryo or fetus shall be taken as the sum of:

(a) The deep-dose equivalent to the declared pregnant woman; and

(b) The dose equivalent to the embryo or fetus resulting from radionuclides in the embryo or fetus and radionuclides in the declared pregnant woman.

(4) If the dose equivalent to the embryo or fetus is found to have exceeded five-tenths (0.5) rem (five (5) mSv), or is within 0.05 rem (five-tenths (0.5) mSv) of this dose, by the time the woman declares the pregnancy to a licensee or registrant, the licensee or registrant shall be in compliance with subsection (1) of this section if the additional dose equivalent to the embryo or fetus does not exceed 0.05 rem (five-tenths (0.5) mSv) during the remainder of the pregnancy.

Section 10. Radiation Dose Limits for Individual Members of the Public. (1) A licensee or registrant shall conduct operations to ensure **that the**:

(a)**[**~~The~~**]** Total effective dose equivalent to individual members of the public from licensed, registered, and other operations shall not exceed **[**~~one-tenth (~~**]**0.1**[)]** rem (one (1) mSv) in a year, exclusive of the dose contributions from:

1. Background radiation;

2. A medical administration the individual received;

3. An exposure to individuals administered radioactive material and released in accordance with 902 KAR 100:072 [~~073~~], Section 27 [~~25~~];

4. Voluntary participation in medical research programs; and

5. The licensee's or registrant's disposal of radioactive material into sanitary sewerage under 902 KAR 100:021, Section 3; and

(b)**[**~~The~~**]** Dose in an unrestricted area from external sources, exclusive of the dose contributions from patients administered radioactive material and released in accordance with 902 KAR 100:072 [~~073~~], Section 27 [~~25~~], shall not exceed 0.002 rem (0.02 mSv) in
one (1) hour.

(2) If a licensee or registrant permits members of the public to have access to controlled areas, the limits for members of the public specified in this section shall [~~continue to~~] apply to those individuals.

(3) A licensee, registrant, or applicant for a license or registration may apply for prior authorization to operate up to an annual dose limit for an individual member of the public of five-tenths (0.5) rem (five (5) mSv). The application shall include the following information:

(a) Demonstration of the need for, and the expected duration of, operations in excess of the limit in subsection (1) of this section;

(b) A licensee's or registrant's program to assess and control dose within the five-tenths (0.5) rem (five (5) mSv) annual limit; and

(c) The procedures to be followed to maintain the dose ALARA.

(4) In addition to the provisions of this administrative regulation, a person, licensee, or registrant subject to the provisions of U.S. Environmental Protection Agency's applicable environmental radiation standards in 40 C.F.R. [~~C.F.R.~~] 190 shall comply with those standards.

(5) The cabinet may impose additional restrictions on radiation levels in unrestricted areas and on the total quantity of radionuclides that a licensee or registrant may release in effluents in order to restrict the collective dose.

(6) In addition to the requirements in subsection (1)(a) of this section, a licensee may permit visitors to an individual who cannot be released under 902 KAR 100:072, Section 27, to receive a radiation dose greater than one tenth (0.1) rem (1 mSv) if:

(a) The radiation dose received does not exceed five-tenths (0.5) rem (5 mSv); and

(b) The authorized user, as defined in 902 KAR 100:010, has determined before the visit that it is appropriate.

Section 11. Compliance with Dose Limits for Individual Members of the Public. (1) To demonstrate compliance with the dose limits for individual members of the public in Section 10 of this administrative regulation, a licensee or registrant shall make or cause to be made[~~, as appropriate,~~] surveys of:

(a) Radiation levels in unrestricted and controlled areas; and

(b) Radioactive materials in effluents released to unrestricted and controlled areas.

(2) A licensee or registrant shall show compliance with the annual dose limit in Section 10 of this administrative regulation by:

(a) Demonstrating by measurement or calculation that the total effective dose equivalent to the individual likely to receive the highest dose from the licensed operation shall not exceed the annual dose limit; or

(b) Demonstrating that:

1. The annual average concentrations of radioactive material released in gaseous and liquid effluents at the boundary of the restricted area shall not exceed the values specified in 10 C.F.R., Appendix B [~~Section 44(9), Table II, of this administrative regulation~~]; and

2. If an individual were continually present in an unrestricted area, the dose from external sources shall not exceed 0.002 rem (0.02 mSv) in an hour and 0.05 rem (five-tenths (0.5) mSv) in a year.

(3) Upon approval from the cabinet, a licensee or registrant may adjust the effluent concentration values in 10 C.F.R., 20 Appendix B,[~~Section 44(9), Table II, of this administrative regulation,~~] for members of the public, to take into account the actual physical and chemical characteristics of the effluents (for example, aerosol size distribution, solubility, density, radioactive decay equilibrium, or chemical form).

Section 12. Surveys and Monitoring. (1) A licensee or registrant shall make or cause to be made, surveys that are:

(a) Necessary for the licensee or registrant to comply with the provisions in this administrative regulation; and

(b) Reasonable under the circumstances to evaluate:

1. The magnitude and extent of radiation levels;

2. Concentrations or quantities of radioactive material; and

3. The potential radiological hazards [~~that may be present~~].

(2) A licensee or registrant shall ensure that instruments and equipment used for quantitative radiation measurements (for example, dose rate and effluent monitoring) are calibrated periodically for the radiation measured.

(3) Personnel dosimeters, except direct and indirect reading pocket ionization chambers and those dosimeters used to measure the dose to the extremities, that require processing to determine the radiation doses used by licensees or registrants to comply with Section 3 of this administrative regulation, other applicable provisions of 902 KAR Chapter 100, or conditions specified in a license, shall be processed and evaluated by a dosimetry processor:

(a) Holding current personnel dosimetry accreditation from the

National Voluntary Laboratory Accreditation Program (NVLAP) of the National Institute of Standards and Technology; and

(b) Approved in this accreditation process for the type of radiation or radiations included in the NVLAP program that most closely approximates the type of radiation or radiations for which the individual wearing the dosimeter is monitored.

Section 13. Conditions Requiring Individual Monitoring of External and Internal Occupational Dose. (1) A licensee or registrant shall monitor exposures to radiation and radioactive material at levels sufficient to demonstrate compliance with the occupational dose limits of this administrative regulation. At [~~As~~] a minimum, the licensee or registrant shall monitor occupational exposure to radiation, from licensed and unlicensed, registered and unregistered radiation sources under the licensee's or registrant's control and shall supply and require the use of individual monitoring devices by:

(a) Adults likely to receive, in one (1) year from radiation sources external to the body, a dose in excess of ten (10) percent of the limits in Section 3(1) of this administrative regulation;

(b) Minors [~~and declared pregnant women~~] likely to receive, in one (1) year from sources external to the body, a deep dose equivalent in excess of **[**~~one-tenth (~~**]**0.1**[**~~)~~**]** rem (1 mSv), a lens dose equivalent in excess of 0.15 rem (1.5 mSv), or a shallow dose equivalent to the skin or to the extremities in excess of five-tenths (0.5) rem (5 mSv) [~~ten (10) percent of the applicable limits in Sections 8 or 9 of this administrative regulation~~]; [~~and~~]

(c) Declared pregnant women likely to receive during the entire pregnancy, from radiation sources external to the body, a deep dose equivalent in excess of **[**~~one-tenth (~~**]**0.1**[**~~)~~**]** rem (1mSv). All of the occupational doses in Section 3 continue to be applicable to the declared pregnant worker as long as the embryo or fetus dose limit is not exceeded; and

(d) Individuals entering a high or very high radiation area.

(2) A licensee or registrant shall monitor, pursuant to Section 6 of this administrative regulation, the occupational intake of radioactive material by, and assess the committed effective dose equivalent to:

(a) Adults likely to receive, in one (1) year, an intake in excess of ten (10) percent of the applicable ALIs in 10 C.F.R., 20 Appendix B [~~Section 44(9), Table I, Columns 1 and 2, of this administrative regulation~~];**[**~~and~~**]**

(b) Minors [~~and declared pregnant women~~] likely to receive, in one (1) year, a committed effective dose equivalent in excess of **[**~~one-tenth (~~**]**0.1**[**~~)~~**]** rem (1 mSv); and [~~0.05 rem (five-tenths (0.5) mSv).~~]

(c) Declared pregnant women likely to receive, during the entire pregnancy, a committed effective dose equivalent in excess of **[**~~one-tenth (~~**]**0.1**[**~~)~~**]** rem (1 mSv).

Section 14. Control of Access to High Radiation Areas. (1) A licensee or registrant shall ensure that each entrance or access point to a high radiation area shall have at least one (1) of the following features:

(a) A control device that, upon entry into the area, shall cause the level of radiation to be reduced below the level an individual may receive a deep-dose equivalent of **[**~~one-tenth (~~**]**0.1**[**~~)~~**]** rem (one (1) mSv) in one (1) hour at thirty (30) centimeters from the radiation source or from a surface that the radiation penetrates;

(b) A control device that shall energize a conspicuous visible or audible alarm
signal so the individual entering the high radiation area and the supervisor of the activity shall be made aware of the entry; or

(c) Entryways that shall be locked, except during periods that access to the areas
is required, with positive control over each individual entry.

(2) In place of the controls required by subsection (1) of this section for a high radiation area, a licensee or registrant may substitute continuous direct or electronic surveillance that shall be capable of preventing unauthorized entry.

(3) A licensee or registrant may apply to the cabinet for approval of alternative methods for controlling access to high radiation areas.

(4) A licensee or registrant shall establish the controls required by subsections (1) and (3) of this section that shall not prevent individuals from leaving a high radiation area.

(5) Control shall not be required for an entrance or access point to a room or other area that is a high radiation area solely because of the presence of radioactive materials prepared for transport and packaged and labeled in accordance with 49 C.F.R. [~~C.F.R.~~] 100-180 if the packages will not remain in the area longer than three (3) days, and the dose rate at one (1) meter from the external surface of a package will not exceed 0.01 rem (**[**~~one-tenth (~~**]**0.1**[**~~)~~**]** mSv) per hour.

(6) Control of entrance or access to rooms or other areas in hospitals shall not be required solely because of the presence of patients containing radioactive material if personnel are in attendance who:

(a) Take the necessary precautions to prevent the exposure of individuals to radiation or radioactive material in excess of the limits established in this administrative
regulation; and

(b) Operate within the ALARA provisions of the licensee's or registrant's radiation protection program.

(7) A registrant is not required to control entrance or access to rooms or other
areas containing sources of radiation capable of producing a high radiation area as described in this section if the registrant has met the specific requirements for access and control specified in 902 KAR 100:100, [~~902 KAR~~] 100:115, and [~~902 KAR~~] 100:155.

Section 15. Control of Access to Very High Radiation Areas. (1) In addition to the
provisions in Section 14 of this administrative regulation, a licensee or registrant shall institute additional measures to ensure that an individual shall not be able to gain unauthorized or inadvertent access to areas in which radiation levels may be encountered at 500 rads (five (5) grays) or more in one (1) hour at one (1) meter from a radiation source or a surface through which the radiation penetrates.

(2) A registrant shall not be required to control entrance or access to rooms or other areas containing sources of radiation capable of producing a very high radiation area as described in subsection (1) of this section if the registrant has met the specific requirements for access and control specified in 902 KAR 100:100, [~~902 KAR~~] 100:115, and [~~902 KAR~~] 100:155.

Section 16. Control of Access to Very High Radiation Areas for Irradiators. (1) This section shall apply to radiation from sources of radiation used in sealed sources in nonself-shielded irradiators.

(2) This section shall not apply to:

(a) Sources of radiation used in teletherapy, radiography, or completely self-shielded irradiators in which the source:

1. Is both stored and operated within the same shielding radiation barrier; and

2. In the designed configuration of the irradiator[~~,~~] is always physically inaccessible to an individual and cannot create high levels of radiation in an area that is accessible to an individual**; and**[~~.~~**]**

(b) Sources from which the radiation shall be incidental to some other use or to nuclear reactor-generated radiation.

(3) Areas where radiation levels may exist in excess of 500 rads (five (5) grays) in one (1) hour at one (1) meter from a source of radiation used to irradiate materials shall meet the following requirements**:**[~~.~~**]**

(a) An entrance or access point shall be equipped with entry control devices **that**[~~which~~**]**:

1. Function automatically to prevent an individual from inadvertently entering the area if very high radiation levels exist;

2. Permit deliberate entry into the area only after a control device is actuated that causes the radiation level within the area, from the source of radiation, to be reduced below a level where it is possible for an individual to receive a deep-dose equivalent in excess of **[**~~one-tenth (~~**]**0.1**[**~~)~~**]** rem (one (1) mSv) in one (1) hour; and

3. Prevent operation of the source of radiation if the source would produce radiation levels in the area that may result in a deep-dose equivalent to an individual in excess of **[**~~one-tenth~~

~~(~~]0.1[~~)~~] rem (one (1) mSv) in one (1) hour.

(b) Additional control devices shall be provided so that, upon failure of the entry control devices to function as required by subsection (3)(a) of this section:

1. The radiation level within the area, from the source of radiation, is reduced below a level where it is possible for an individual to receive a deep-dose equivalent in excess of [~~one-tenth (~~]0.1[~~)~~] rem (one (1) mSv) in one (1) hour; and

2. Conspicuous visible and audible alarm signals are generated to make an individual attempting to enter the area aware of the hazard, and at least one (1) other authorized individual who is physically present, familiar with the activity, and prepared to render or summon assistance, aware of the failure of the entry control devices;

(c) A licensee or registrant shall provide control devices so that, upon failure or removal of physical radiation barriers other than the source's shielded storage container:

1. The radiation level from the source of radiation shall be reduced below a level where it is possible for an individual to receive a deep-dose equivalent in excess of [~~one-tenth (~~]0.1[~~)~~] rem (one (1) mSv) in one (1) hour; and

2. Conspicuous visible and audible alarm signals shall be generated to make potentially affected individuals aware of the hazard, and a licensee, registrant, or at least one (1) other individual who is familiar with the activity and prepared to render or summon assistance, aware of the failure or removal of the physical barrier;

(d) If the shield for the stored source is a liquid, the licensee or registrant shall provide means to:

1. Monitor the integrity of the shield; and

2. Automatically signal loss of adequate shielding;

(e) Physical radiation barriers that comprise permanent structural components, such as walls, that have no credible probability of failure or removal in ordinary circumstances need not meet the requirements of paragraphs (c) and (d) of this subsection;

(f) An area shall be equipped with devices that automatically generate conspicuous visible and audible alarm signals:

1. To alert personnel in the area before the source can be put into operation;

2. In sufficient time for an individual in the area to operate a clearly identified control device, which is installed in the area and can prevent the source from being put into operation;

(g) An area shall be controlled by use of administrative procedures and devices as are necessary to ensure that the area is cleared of personnel prior to use of the source;

(h) An area shall be checked by a radiation measurement to ensure that, prior to the first individual's entry into the area after use of the source of radiation, the radiation level from the source of radiation in the area is below a level where it is possible for an individual to receive a deep-dose equivalent in excess of [~~one-tenth (~~]0.1[~~)~~] rem (one (1) mSv) in one (1) hour;

(i) The entry control devices required in paragraph (a) of this subsection shall have been tested for proper functioning as follows:

1. Daily prior to initial operation with the source of radiation, unless operations were continued uninterrupted from a previous day;

2. Prior to resumption of operation of the source of radiation after an unintended interruption; and

3. By adherence to a submitted schedule for periodic tests of the entry control and warning systems**;**[~~.~~]

(j) A licensee or registrant shall not conduct operations if control devices are not functioning properly, other than those necessary to place the source of radiation in safe condition or to effect repairs on controls; **and**

(k) Entry and exit portals used in transporting materials to and from the irradiation area, and not intended for use by individuals, shall be controlled by devices and administrative procedures as are necessary to physically protect and warn against inadvertent entry by an individual through these portals. Exit portals for processed materials shall be equipped to detect and signal the presence of loose radiation sources carried toward an exit to automatically prevent loose radiation sources from being carried out of the area.

(4)(a) Persons holding licenses or registrations, or applicants for licenses or registrations, for radiation sources may apply to the cabinet for approval of the use of alternative safety measures if they:

1. Are governed by the provisions of subsection (3) of this section; and

2. May be used in a variety of positions or in locations, such as open fields or forests, that make it impracticable to comply with provisions of subsection (3) of this section (for example, those for the automatic control of radiation levels).

(b) Alternative safety measures shall provide a degree of personnel protection equivalent to those specified in subsection (3) of this section.

(c) At least one (1) of the alternative measures shall include an entry-preventing interlock control, based on a measurement of the radiation, that ensures the absence of high radiation levels before an individual may gain access to the area in which sources of radiation are used.

(5) Entry control devices required by subsections (3) and (4) of this section shall be established in a way that an individual shall [~~will~~] not be prevented from leaving the area.

Section 17. Use of Process or Other Engineering Controls. The licensee or registrant shall use, to the extent practicable, process or other engineering controls [~~(for example~~] (such as[~~,~~] containment, decontamination, or ventilation) to control the concentration [~~concentrations~~] of radioactive material in air.

Section 18. Use of Other Controls. (1) If it is not practicable to apply process or other engineering controls to control the concentrations of radioactive material in air to values below those that define an airborne radioactivity area, a licensee or registrant shall, consistent with maintaining the total effective dose equivalent ALARA, increase monitoring and limit intakes by one (1) or more of the following means:

(a) [~~(1)~~] Control of access;

(b) [~~(2)~~] Limitation of exposure times;

(c) [~~(3)~~] Use of respiratory protection equipment; or

(d) [~~(4)~~] Other controls [~~approved by the cabinet~~].

(2) If the licensee or registrant performs an ALARA analysis to determine **if**[~~whether or not~~] respirators should be used, the licensee or registrant may consider safety factors other than radiological factors. The licensee or registrant may also consider the impact of respirator use on workers' industrial health and safety.

Section 19. Use of Individual Respiratory Protection Equipment. (1) If a licensee or registrant uses respiratory protection equipment to limit the intake [~~intakes~~] of radioactive material [~~pursuant to Section 18 of this administrative regulation,~~]:

(a)**1.** The [~~the~~] licensee or registrant shall use only respiratory protection equipment that shall be tested and certified [~~or shall have had certification extended~~] by the National Institute for Occupational Safety and Health [~~/Mine Safety and Health Administration~~] (NIOSH[~~/MSHA~~])[~~.~~]; or

2.[~~(b)1.~~][~~(a) If a licensee or registrant wishes to use~~] Prior to using equipment that has not been tested or certified by NIOSH[~~/MSHA, has not had certification extended by NIOSH/MSHA~~], or for which there exists no schedule for testing or certification, the licensee or registrant shall submit to the cabinet[~~:~~

~~1.~~] an application for authorized use of that equipment, except as provided in this administrative regulation [~~including a demonstration by testing~~].

a.[~~;~~][~~or~~]

[~~2.~~] The application shall include evidence that the material and performance characteristics of the equipment are capable of providing the proposed degree of protection under anticipated condition of use; and

b.[~~3.~~] The material and performance characteristics shall be demonstrated either by licensee or registrant testing or on the basis of reliable test information**;**

(b)[~~.~~][~~A demonstration on the basis of reliable test information that the material and performance characteristics of the equipment shall be capable of providing the proposed degree of protection under anticipated conditions of use;~~]

[~~(c)~~][~~(b)~~] A licensee or registrant shall implement and maintain a respiratory protection program that shall include:

1. Air sampling sufficient to identify the potential hazard, permit proper equipment selection, and estimate doses [exposures];

2. Surveys and bioassays, as appropriate, to evaluate actual intakes;

3. Testing of respirators for operability (user seal check for face sealing devices and functional check for others) immediately prior to each use;

4. Written procedures regarding:

a. Respirator selection**[,]**[fitting, issuance, maintenance, and testing of respirators, including testing for operability immediately prior to use];

b. Supervision and training of respirator users [personnel];

c. Monitoring, including air sampling and bioassays; [and]

d. Fit testing;

e. Breathing air quality;

f. Inventory and control;

g. Storage, issuance, maintenance, repair, testing, and quality assurance of respiratory protection equipment;

h. Recordkeeping; and

i. Limitations on periods of respirator use and relief from respirator use**;[.]**

5. Determination by a physician prior to initial fitting of a face sealing respirator [respirators], and either every twelve (12) months or periodically at a frequency determined by a physician, that the individual user shall be medically fit [physically able] to use the respiratory protection equipment; **and**

6. Fit testing, with **a** fit factor ten (10) times the APF for negative pressure devices and a fit factor greater than or equal to 500 for any positive pressure, continuous flow, and pressure-demand devices, before the first field use of tight fitting, face-sealing respirators and periodically thereafter at a frequency not to exceed one (1) year. Fit testing shall be performed with the facepiece operating in the negative pressure mode**;**

(c)[.(d)**]**[(c)] A licensee or registrant shall issue a written policy statement on respirator usage covering the:

1. Use of process or other engineering controls, instead of respirators;

2. Routine, nonroutine, and emergency use of respirators; and

3. Periods of respirator use and relief from respirator use;

(d)[(e)**]**[(d)] A licensee or registrant shall advise a respirator user that the user may leave the area for relief from respirator use in the event of:

1. Equipment malfunction;

2. Physical or psychological distress;

3. Procedural or communication failure;

4. Significant deterioration of operating conditions; or

5. Other conditions that may require relief;

(e)[or**]**[and]

[6. Any other conditions that may require such relief; and

(f)**]**[(e)] A licensee or registrant, when selecting respiratory devices, shall:

1. Consider limitations appropriate to [Use equipment within limitations for] type and mode of use; [and]

2. Provide [If needed, provide proper] visual correction, adequate communication, low temperature work environments, and concurrent use of other safety or radiological equipment; and [other special capabilities such as adequate skin protection.]

3. Use equipment in a way as not to interfere with the proper operation of the respirator**;**

(f)[.(g)**]** Standby rescue persons shall:

1. Be required **if[**whenever**]** one-piece atmosphere-supplying suits or any combination of supplied air respiratory protection device and personnel protective equipment are used from which an unaided individual would have difficulty extricating himself or herself**;[**.**]**

2. Be equipped with respiratory protection devices or other apparatus appropriate for the potential hazards;

3. Observe or otherwise maintain continuous communication with the workers (visual, voice, signal line, telephone, radio, or other suitable means); and

4. Be immediately available to assist them in case of a failure of the air supply or for any other reason that requires relief from distress**;**

(g)[.(h)**]** A sufficient number of standby rescue persons shall be immediately available to assist all users of this type of equipment and to provide effective emergency rescue if needed**;**

(h)[.(i)1.**]** Atmosphere-supplying respirators shall be supplied with respirable air of grade D quality or better as defined by Compressed Gas Association in publication G-7.1, **["]**Commodity Specification for Air,**["** 1997**]** and included in the regulations of the Occupational Safety and Health Administration (29 **C.F.R.[**C.F.R.**]** 1910.134(i)(1)(ii)(A) through (E)).**[**2.**]** Grade D quality of air criteria include:

1.[a.**]** Oxygen content (v/v) of 19.5-23.5%;

2.[b.**]** Hydrocarbon (condensed) content of five (5) milligrams per cubic meter of air or less;

3.[c.**]** Carbon monoxide (CO) content of ten (10) parts per million (ppm) or less;

4.[d.**]** Carbon dioxide content of 1,000 ppm or less; and

5.[e.**]** Lack of noticeable odor**;**

(i)[.(j)**]** The licensee or registrant shall ensure that no objects, materials**,** or substances, such as, facial hair, or any conditions that interfere with the face-facepiece seal or valve function, and that are under the control of the respirator wearer, are present between the skin of the wearer's face and the sealing surface of a tight-fitting respirator facepiece**; and**

(j)1.[(k)(1.)**]** In estimating the dose to individuals from intake of airborne radioactive materials, the concentration of radioactive material in the air that is inhaled when respirators are worn is initially assumed to be the ambient concentration in air without respiratory protection divided by the assigned protection factor.

2. If the dose is later found to be greater than the estimated dose, the corrected value shall be used.

3. If the dose is later found to be less than the estimated dose, the corrective value may be used.

(2) The licensee shall obtain authorization from the cabinet before using assigned protection factors in excess of those specified in 10 **C.F.R. 20,[**C.F.R. 20**]** Appendix A. The cabinet may authorize a licensee to use higher assigned protection factors on receipt of an application that [In estimating exposure of individuals to airborne radioactive materials, a licensee or registrant may make allowance for respiratory protection equipment used to limit intakes under Section 18 of this administrative regulation, if the following conditions, in addition to those in subsection (1) of this section, are satisfied]:

(a) Describes the situation for which a need exists for higher protection factors [The licensee or registrant selects respiratory protection equipment that provides a protection factor greater than the multiple by which peak concentrations of airborne radioactive materials in the working area are expected to exceed the values specified in Section 44(9), Table I, Column 3, of this administrative regulation.

1. If the selection of a respiratory protection device with a protection factor greater than the peak concentration is inconsistent with the goal specified in Section 18 of this administrative regulation of keeping the total effective dose equivalent ALARA, the licensee or registrant may select respiratory protection equipment with a lower protection factor only if the selection would result in keeping the total effective dose equivalent ALARA;

2. The concentration of radioactive material in air that is inhaled if respirators are worn may be initially estimated by dividing the average concentration in air during each period of uninterrupted use by the protection factor;

3. If the exposure is later found to be greater than estimated, the corrected value shall be used; and

4. If the exposure is later found to be less than estimated, the corrected value may be used]; and

(b) Demonstrates that the respiratory protection equipment provides these higher protection factors under the proposed conditions of use [The licensee or registrant shall obtain authorization from the cabinet before assigning respiratory protection factors in excess of those specified in Section 43 of this administrative regulation. The cabinet may authorize the licensee or registrant to use higher protection factors on receipt of an application that:

1. Describes the situation for which a need exists for higher protection factors; and

~~2. Demonstrates the respiratory protection equipment provides these higher protection factors under the proposed conditions of use.~~

~~(3) A licensee or registrant shall use as emergency devices only respiratory protection equipment that has been specifically certified or had certification extended for emergency use by NIOSH/MSHA.~~

~~(4) A licensee or registrant shall notify, in writing, the Manager of the Radiation Control Branch at least thirty (30) days before the date that respiratory protection equipment will first be used under the provisions of either subsection (1) or (2) of this section~~].

Section 20. Further Restrictions on the Use of Respiratory Protection Equipment. The cabinet may impose restrictions in addition to those in Sections 18[~~,~~] and 19[~~, and 43~~] of this administrative regulation and 10 **C.F.R. 20,[**~~C.F.R. 20~~**]** Appendix A to:

(1) Ensure that the respiratory protection program of the licensee shall be adequate to limit doses to [~~exposures of~~] individuals from intakes of [~~to~~] airborne radioactive materials consistent with maintaining total effective dose equivalent ALARA;

and

(2) Limit the extent to which a licensee shall use respiratory protection equipment instead of process or other engineering controls.

Section 21. Security of Sources of Radiation. A licensee or registrant shall secure from unauthorized removal or access**,** licensed materials stored in controlled or unrestricted areas.

Section 22. Control of Sources of Radiation Not in Storage. A licensee or registrant shall control and maintain constant surveillance of licensed or registered material in a controlled or unrestricted area and not in storage.

Section 23. Caution Signs and Standard Radiation Symbol. (1) Unless otherwise authorized by the cabinet, the symbol prescribed by this section shall use the colors magenta, purple, or black on yellow background. The symbol prescribed by this section shall be the three (3) bladed design:

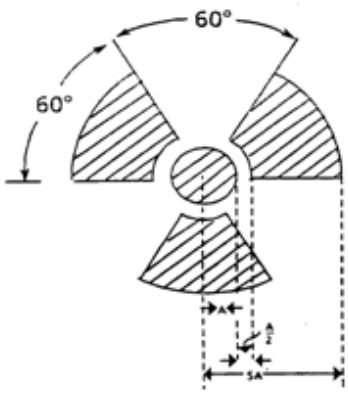

RADIATION SYMBOL

(a) Cross-hatched area shall be magenta, purple, or black; and

(b) The background shall be yellow.

(2) Exception to color requirements for standard radiation symbol. A licensee or registrant may label sources, source holders, or device components containing sources of radiation subjected to high temperatures with conspicuously etched or stamped radiation caution symbols and without a color requirement.

(3) Additional information on signs and labels. In addition to the contents of signs and labels prescribed in this section, a licensee or registrant may provide[~~,~~] on or near the required signs and labels[~~,~~] additional information, as appropriate, to make individuals aware of potential radiation exposures and to minimize the exposures.

Section 24. Posting Requirements. (1) Posting of radiation areas. A licensee or registrant shall post a radiation area with a conspicuous sign or signs bearing the radiation symbol and the words: "CAUTION, RADIATION AREA".

(2) Posting of high radiation areas. A licensee or registrant shall post a high radiation area with a conspicuous sign or signs bearing the radiation symbol and the words: "CAUTION, HIGH RADIATION AREA" or "DANGER, HIGH RADIATION AREA".

(3) Posting of very high radiation areas. A licensee or registrant shall post a very high radiation area with a conspicuous sign or signs bearing the radiation symbol and words: "GRAVE DANGER, VERY HIGH RADIATION AREA".

(4) Posting of airborne radioactivity areas. A licensee or registrant shall post an airborne radioactivity area with a conspicuous sign or signs bearing the radiation symbol and the words: "CAUTION, AIRBORNE RADIOACTIVITY AREA" or "DANGER, AIRBORNE RADIOACTIVITY AREA".

(5) Posting of areas or rooms in which licensed or registered material shall be used or stored. A licensee or registrant shall post an area or room in which there is used or stored an amount of licensed or registered material exceeding ten (10) times the quantity of the material specified in 902 KAR 100:030**[**~~, Section 1~~**]**[~~2~~]**[**~~,~~**]** with a conspicuous sign or signs bearing the radiation symbol and the words "CAUTION, RADIOACTIVE MATERIAL(S)" or "DANGER, RADIOACTIVE MATERIAL(S)".

Section 25. Exceptions to Posting Requirements. (1) A licensee or registrant shall not be required to post caution signs in areas or rooms containing sources of radiation for periods of less than eight (8) hours[~~,~~] if the following conditions are met:

(a) The sources of radiation are constantly attended during these periods by an individual who takes the precautions necessary to prevent the exposure of individuals to radiation or radioactive materials in excess of the limits established in this administrative regulation; and

(b) The area or room are subject to the licensee's or registrant's control.

(2) Rooms or other areas in hospitals occupied by patients shall not be required to be posted with caution signs pursuant to Section 24 of this administrative regulation if the patient could be released from licensee control in accordance with 902 KAR 100:072 [~~073~~], Section 27 [~~25~~].

(3) A room or area is not required to be posted with a caution sign because of the presence of a sealed source if the radiation level at thirty (30) centimeters from the surface of the source container or housing does not exceed 0.005 rem (0.05 mSv) per hour.

(4) Rooms in hospitals or clinics that are used for teletherapy are exempt from the requirement to post caution signs under Section 24 of this administrative regulation **if[**~~when~~**]**:

1. Access to the room is controlled pursuant to 902 KAR 100:072, Section 50; and

2. Personnel in attendance take necessary precautions to prevent the inadvertent exposure of workers, other patients, and members of the public to radiation in excess of the limits established in this administrative regulation.

Section 26. Labeling Containers. (1) A licensee or registrant shall ensure a container of licensed or registered material bears a durable, clearly visible label with the radiation symbol and the words "CAUTION, RADIOACTIVE MATERIAL" or "DANGER, RADIOACTIVE MATERIAL".

(a) The label shall provide the following information:

1. Radionuclide present;

2. An estimate of the quantity of radioactivity;

3. Date the activity is estimated;

4. Radiation levels**;**

5. Kinds of materials; and

6.[~~, kinds of materials; and~~

~~5.~~**]** Mass enrichment.

(b) Information in this subsection shall permit individuals handling or using the containers, or working in the vicinity of the containers, to take precautions to avoid or minimize exposures.

(2) A licensee or registrant shall, prior to removal or disposal of empty uncontaminated containers to unrestricted areas:

(a) [~~1.~~] Remove or deface the radioactive material label; or

(b) [2.] Clearly indicate the container no longer contains radioactive materials.

Section 27. Exemptions to Labeling Requirements. (1) A licensee or registrant shall not be required to label:

(a) Containers holding licensed or registered material in quantities less than the quantities listed in 902 KAR 100:030**[**, Section 2**]**;

(b) Containers holding licensed or registered material in concentrations less than those specified in 10 **C.F.R. 20,[**C.F.R. 20**]** Appendix B [Section 44(9), Table III, of this administrative regulation];

(c) Containers attended by an individual who takes precautions necessary to prevent the exposure of individuals in excess of the limits established by this administrative regulation;

(d) Containers if they are in transport and packaged and labeled in accordance with 49 **C.F.R.[**C.F.R.**]** Parts 100-180; or

(e) Containers that are accessible only to individuals authorized to handle or use them, or to work in the vicinity of the containers, if the contents are identified to these individuals by a readily available written record (for example, containers in locations that include water-filled canals, storage vaults, or hot cells). The record shall be retained as long as the containers are in use for the purpose indicated on the record; or

(f)[(c)**]**[(f)] Installed manufacturing or process equipment, such as chemical process equipment, piping, and tanks**.[**;**]**

(2) Labeling of packages containing radioactive materials shall be required by the U.S. Department of Transportation (DOT) if the amount and type of radioactive material exceeds the limits for an excepted quantity or article pursuant to 49 **C.F.R.[**C.F.R.**]** 173.403**[**(m) and (w)**]** and 173.421-173.424.

Section 28. Procedures for Receiving and Opening Packages. (1) A licensee or registrant who expects to receive a package containing quantities of radioactive material in excess of a Type A quantity pursuant to 902 KAR 100:010 shall make arrangements to receive:

(a) The package if the carrier offers it for delivery; or

(b) Notification of the arrival of the package at the carrier's terminal and take possession of the package expeditiously.

(2)(a) A licensee or registrant shall monitor the external surfaces of a labeled
package for:

1. Radioactive contamination unless the package contains only radioactive material in the form of a gas or in special form as defined in 902 KAR 100:010; **and**

2. Radiation levels unless the package contains quantities of radioactive material that are less than or equal to the Type A quantity defined in 902 KAR 100:010; and

(b) All packages known to contain radioactive material for radioactive contamination and radiation levels if there is evidence of potential contamination such as packages that are crushed, wet, or damaged.

(3) A licensee or registrant shall perform the monitoring required by subsection (2) of this section as soon as practicable after receipt of the package, but not later than **three (3) hours**:

(a)**[**Three (3) hours**]** After the package is received at the licensee's facility if received during the licensee's or registrant's normal working hours; or

(b)**[**Three (3) hours**]** From the beginning of the next working day if received after working hours.

(4) A licensee or registrant shall immediately notify the final delivery carrier and[, by telephone, telegram, mailgram, or facsimile,] the Manager of the Radiation Health[Control] Branch by telephone **if[**when**]**[if]:

(a) Removable radioactive surface contamination exceeds the limits of 902 KAR 100:070, Section 17 [14]; or

(b) External radiation levels exceed the limits of 902 KAR 100:070, Section 17 [14].

(5) A licensee or registrant shall:

(a) Establish, maintain, and retain written procedures for safely opening packages in which radioactive material is received; and

(b) Ensure that the procedures are followed and due consideration is given to special instructions for the type of package being opened.

(6) A licensee or registrant transferring special form sources in licensee or registrant owned or operated vehicles to and from a work site shall be exempt from the contamination monitoring requirements of subsection (2) of this section, but shall not be exempt from the survey requirement for measuring radiation levels that are required to ensure the source shall remain properly lodged in its shield.

Section 29. General Provisions for Records. (1)(a) A licensee or registrant shall use the units curie, rad, and rem, including multiples and subdivisions, and shall clearly indicate the units of quantities on records required by this administrative regulation.

(b)1. All quantities shall be recorded as stated in paragraph (a) of this section, **except that[**however,**]** the licensee may record quantities in the International System of Units (SI) in parentheses following each of the units specified in paragraph (a) of this section**.[**;**]**

2. Information shall be recorded in SI or in SI and units as specified in paragraph (a) of this section when recording information on shipment manifests, as required in 902 KAR 100:021, Section 9.

(2) A licensee or registrant shall make a clear distinction among the quantities entered on the records required by this administrative regulation, such as:

(a) Total effective dose equivalent;

(b) Shallow-dose equivalent;

(c) Eye dose equivalent;

(d) Deep-dose equivalent; and

(e) Committed effective dose equivalent.

Section 30. Records of Radiation Protection Programs. (1) A licensee or registrant shall maintain records of the radiation protection program, including:

(a) The provisions of the program; and

(b) Audits and other reviews of program content and implementation.

(2) A licensee or registrant shall retain records required by subsection (1)(a) of this section until the cabinet terminates each pertinent license requiring the record.

(3) A licensee or registrant shall retain records required by subsection (1)(b) of this section for **at least** three (3) years after the record is made.

Section 31. Records of Surveys. (1) A licensee or registrant shall:

(a) Maintain records showing the results of surveys and calibrations required by Sections 12 and 28(2) of this administrative regulation; and

(b) Retain records for **at least** three (3) years after the record is made.

(2) A licensee or registrant shall retain the following records until the cabinet terminates the pertinent license or registration requiring the record:

(a) Results of surveys to determine the dose from external sources of radiation and used, in the absence of or in combination with individual monitoring data, in the assessment of individual dose equivalents;

(b) Results of measurements and calculations used to determine individual intakes of radioactive material and used in the assessment of internal dose;

(c) Results of air sampling, surveys, and bioassays required pursuant to Section **19(1)(b)1. and 2.[**19(1)(c)1 and 2**]** of this administrative regulation; and

(d) Results of measurements and calculations used to evaluate the release of radioactive effluents to the environment.

Section 32. Determination of Prior Occupational Dose. (1) For an individual likely to receive, in a year, an occupational dose requiring monitoring under Section 13 of this administrative regulation, the licensee or registrant shall:

(a) Determine the occupational radiation dose received during the current year; and

(b) Attempt to obtain the records of lifetime cumulative occupational radiation dose.

(2) Prior to permitting an individual to participate in a planned special exposure, a licensee or registrant shall determine:

(a) The internal and external doses from previous planned special exposures; and

(b) Doses in excess of the limits, including doses received during accidents and emergencies, received during the lifetime of the individual.

(3) In complying with the requirements of subsection (1) of this section, a licensee or registrant may:

(a) Accept, as a record of the occupational dose the individual received during the current year, a written signed statement from the individual[,] or from the individual's most recent employer for work involving radiation exposure, that discloses the nature and amount of an occupational dose the individual may have received during the current year**;[**.**]**

(b) Accept, as the record of lifetime cumulative radiation dose, an up-to-date NRC Form 4, **["]**Cumulative Occupational **Dose[**~~Exposure~~**]** History,**["]** or equivalent, signed by the individual and counter-signed by an:

1. Appropriate official of the most recent employer for work involving radiation exposure; or

2. The individual's current employer if the individual is not employed by the licensee or registrant**; or[**.**]**

(c) Obtain reports of the individual's dose equivalent from the most recent employer for work involving radiation exposure, or the individual's current employer if the individual is not employed by the licensee or registrant, by telephone, telegram, electronic media, or letter. If the authenticity of the transmitted report cannot be established, a licensee or registrant shall request a written verification of the dose data.

(4) A licensee or registrant shall record the exposure history, as required by subsection (1) of this section, on NRC Form 4, **Cumulative Occupational Dose History,** or other clear and legible record, of the information required on that form.

(a) The form or record shall:

1. Show each period the individual received occupational exposure to radiation or radioactive material; and

2. Be signed by the individual who received the exposure**.[**;**]**

(b) For each period a licensee or registrant obtains reports, the licensee or registrant shall use the dose shown in the report in preparing NRC Form 4**, Cumulative Occupational Dose History.[**~~; and~~**]**

(c) For a period in which a licensee or registrant does not obtain a report, the licensee shall place a notation on NRC Form 4**, Cumulative Occupational Dose History,** indicating the periods of time for which data are not available.

(5) If a licensee is unable to obtain a complete record of an individual's current and previously accumulated occupational dose, the licensee or registrant shall assume:

(a) In establishing administrative controls under Section 3(6) of this administrative regulation for the current year, that the allowable dose limit for the individual is reduced by 1.25 rems (twelve and five-tenths (12.5) mSv) for each quarter for which records were unavailable and the individual was engaged in activities that may have resulted in occupational radiation exposure; and

(b) That the individual is not available for planned special exposures.

(6) A licensee or registrant shall:

(a) [~~1.~~] Retain the records on NRC Form 4, **Cumulative Occupational Dose History,** or equivalent, **at least** until the cabinet terminates the pertinent license or registration requiring this record; and

(b) [~~2.~~] Retain records used in preparing NRC Form 4**, Cumulative Occupational Dose History,** for **at least** three (3) years after the record is made.

Section 33. Records of Planned Special Exposures. (1) For each use of the provisions of Section 7 of this administrative regulation for planned special exposures, a licensee or registrant shall maintain records that include[~~s~~]:

(a) The name of the management official who authorized the planned special exposure;**[**~~and~~**]**

(b) A copy of the signed authorization; and

(c) Description of:

1. The exceptional circumstances requiring the use of a planned special exposure;

2. What actions were necessary;

3. Why the actions were necessary;

4. How doses were maintained ALARA;

5. What individual and collective doses were expected to result; and

6. The doses actually received in the planned special exposure.

(2) A licensee or registrant shall retain the records **at least** until the cabinet terminates the pertinent license or registration requiring these records.

Section 34. Records of Individual Monitoring Results. (1) A licensee or registrant shall maintain records of doses received:

(a) By individuals for whom monitoring was required by Section 13 of this administrative regulation; and

(b) During planned special exposures, accidents, and emergency conditions.

(2) The recordkeeping requirements shall include, if applicable:

(a) Deep-dose equivalent to the whole body;

(b) Lens [~~Eye~~] dose equivalent;

(c) Shallow-dose equivalent to the skin and extremities;

(d) Estimated intake [~~or body burden~~] of radionuclides;

(e) Committed effective dose equivalent assigned to the intake [~~or body burden~~] of radionuclides;

(f) Specific information used to calculate the committed effective dose equivalent under Section 6(1) and (3), and Section 13 **if[**~~when~~**]** required, of this administrative regulation;

(g) Total effective dose equivalent, if required by Section 4 of this administrative regulation; and

(h) Total of the deep-dose equivalent and the committed dose to the organ receiving the highest total dose.

(3) A licensee or registrant shall make entries of the records specified in subsection (1) of this section at least annually.

(4) A licensee or registrant shall maintain the records specified in subsection (1) of this section on NRC Form 5, **["]**Occupational **Dose[**~~Exposure~~**]** Record for a Monitoring Period,**["]** in accordance with the instructions for NRC Form 5, or in clear and legible records containing the information required by NRC Form 5.

(5) The records required under this section shall be protected from public disclosure because of their personal privacy nature.

(6) A licensee or registrant shall maintain the:

(a) Records of dose to an embryo or fetus with the records of dose to the declared pregnant woman; and

(b) Declaration of pregnancy on file, which [~~but~~] may be maintained separately from the dose records.

(7) A licensee or registrant shall retain each required form or record **at least** until the cabinet terminates the pertinent license or registration requiring the record.

(8) Assessments of dose equivalent and records made using units in effect before a licensee's or registrant's adoption of this administrative regulation need not to be changed.

Section 35. Records of Dose to Individual Members of the Public. (1) A licensee or registrant shall maintain records sufficient to demonstrate compliance with the dose limit for individual members of the public.

(2) A licensee or registrant shall retain the records required by subsection (1) of this section **at least** until the cabinet terminates the pertinent license or registration requiring the record.

Section 36. Records of Testing Entry Control Devices for Very High Radiation Areas. (1) A licensee or registrant shall maintain records of tests made under Section **16(3)(i)[**~~16(4)(i)~~**]** of this administrative regulation on entry control devices for very high radiation areas. These records shall include the date, time, and results of each test of function.

(2) A licensee or registrant shall retain the records required by subsection (1) of this section for **at least** three (3) years after the record is made.

Section 37. Form of Records. (1) Records required by 902 KAR Chapter 100 shall be legible throughout the specified reten-

tion period.

(2) The record shall be:

(a) [~~1.~~] The original;

(b) [~~2.~~] A reproduced copy; or

(c) [~~3.~~] A microform if the copy or microform is authenticated by authorized personnel and the microform is capable of producing a clear copy throughout the required retention period.

(3) The record may be stored in electronic media with the capability for producing legible, accurate, and complete records during the required retention period.

(4) Records such as letters, drawings, and specifications[~~,~~] shall include pertinent information such as stamps, initials, and signatures.

(5) A licensee or registrant shall maintain adequate safeguards against tampering with and loss of records.

Section 38. Reports of Theft or Loss of Licensed or Registered Sources of Radiation. (1) Telephone reports.

(a) A licensee or registrant shall report by telephone as follows:

1. Immediately after its occurrence becomes known to the licensee or registrant, lost, stolen, or missing licensed or registered material in an aggregate quantity equal to or greater than 1,000 times the quantity specified in 902 KAR 100:030**[**~~, Section 2,~~**]** under circumstances **in which[**~~where~~**]** it appears to the licensee or registrant that an exposure may result to persons in unrestricted areas; or

2. Within thirty (30) days after the occurrence of lost, stolen, or missing licensed or registered material becomes known to the licensee or registrant, licensed or registered material in a quantity greater than ten (10) times the quantity pursuant to 902 KAR 100:030**[**~~, Section 2,~~**]** still missing at this time.

(b) Reports shall be made to the cabinet.

(2) Written reports.

(a) A licensee or registrant required to make a report pursuant to subsection (1) of this section shall, within thirty (30) days after making the telephone report, make a written report setting forth the following information:

1. Description of the licensed or registered material involved, including:

a. Kind;

b. Quantity; and

c. Chemical and physical form;

2. Description of the circumstances under which the loss or theft occurred;

3. Statement of disposition, or probable disposition, of the licensed or registered material involved;

4. Exposures of individuals to radiation, circumstances under which the exposures occurred, and the possible total effective dose equivalent to persons in unrestricted areas;

5. Actions that have been[~~,~~] or shall be[~~,~~] taken to recover the material; and

6. Procedures or measures that have been[~~,~~] or shall be[~~,~~] adopted to ensure against a recurrence of the loss or theft of licensed or registered material.

(b) Reports shall be made to the cabinet.

(3) Subsequent to filing the written report, a licensee or registrant shall report additional substantive information on the loss or theft within thirty (30) days after the licensee or registrant learns of the information.

(4) A licensee or registrant shall prepare and file a report with the cabinet as required by this section so that names of individuals who may have received exposure to radiation shall be stated in a separate and detachable part of the report.

Section 39. Notification of Incidents. (1) Immediate notification. A licensee or registrant shall immediately report an event involving radioactive material possessed by the licensee or registrant that may have caused, or threatens to cause, one (1) or more of the following conditions:

(a) An individual may receive:

1. A total effective dose equivalent of twenty-five (25) rems (0.25 Sv) or more;

2. A lens [~~An eye~~] dose equivalent of seventy-five (75) rems (0.75 Sv) or more; or

3. A shallow-dose equivalent to the skin or extremities of 250 rads (two and five-tenths (2.5) Gy) or more;

(b) The release of radioactive material, inside or outside of a restricted area**,[**~~;~~**]** so that, had an individual been present for twenty-four (24) hours, the individual may have received an intake five (5) times the occupational annual limit on intake. The provisions of this paragraph shall not apply to locations in which personnel are not normally stationed during routine operations, such as in hot-cells or process enclosure;

(c) A loss of one (1) working week or more of the operation of facilities affected; or

(d) Damage to property in excess of $200,000.

(2) Twenty-four (24) hour notification. A licensee or registrant shall, within twenty-four (24) hours of discovery of the event, report an event involving loss of control of licensed or registered source of radiation possessed by the licensee or registrant that may have caused, or shall threaten to cause, one (1) or more of the following conditions:

(a) An individual to receive, in a period of twenty-four (24) hours:

1. A total effective dose equivalent exceeding five (5) rems (0.05 Sv);

2. A lens [~~An eye~~] dose equivalent exceeding fifteen (15) rems (0.15 Sv); or

3. A shallow-dose equivalent to the skin or extremities exceeding fifty (50) rems (five-tenths (0.5) Sv);

(b) The release of radioactive material, inside or outside of a restricted area[~~;~~] so that, had an individual been present for twenty-four (24) hours, the individual may have received an intake in excess of one (1) occupational annual limit on intake. The provisions of this paragraph shall not apply to locations in which personnel are not normally stationed during routine operations, such as in hot-cells or process enclosures;

(c) A loss of one (1) day or more of the operation of facilities affected; or

(d) Damage to property in excess of $2,000.

(3) A licensee or registrant shall prepare and file a report with the cabinet as required by this section so that names of individuals who have received exposure to radiation or radioactive material are stated in a separate and detachable part of the report.

(4) Licensees or registrant shall make reports required by this section to the cabinet by:

(a) Telephone;

(b) Telegram;

(c) Mailgram; or

(d) Facsimile.

(5) The provisions of this section shall not include doses that result from planned special exposures that are within the limits for planned special exposures, and are reported under Section 41 of this administrative regulation.

Section 40. Reports of Exposures, Radiation Levels, and Concentrations of Radioactive Material Exceeding the Limits. (1) Reportable events. In addition to the notification required by Section 39 of this administrative regulation, a licensee or registrant shall submit a written report within thirty (30) days after learning of one (1) or more of the following occurrences:

(a) An incident for which notification shall be required by Section 39 of this administrative regulation; or

(b) Doses in excess of one (1) of the following:

1. Occupational dose limits for adults in Section 3 of this administrative regulation;

2. Occupational dose limits for a minor in Section 8 of this administrative regulation;

3. Limits for an embryo or fetus of a declared pregnant woman in Section 9 of this administrative regulation;

4. Limits for an individual member of the public in Section 10 of this administrative regulation;

5. Applicable limit in the license or registration; **or**

6. ALARA constraints for air emissions established under Section 2(4);**[**~~or~~**]**

(c) Levels of radiation or concentrations of radioactive material in:

1. A restricted area in excess of an applicable limit in the li-

cense or registration; or

2. An unrestricted area in excess of ten (10) times an applicable limit set forth in this administrative regulation, the license, or the registration, regardless of exposure of an individual in excess of the limits in Section 10 of this administrative regulation occurs; or

(d) For a person, agency, or licensee subject to the provisions of 40 **C.F.R.[**~~C.F.R.~~**]** 190, levels of radiation or releases of radioactive material in excess of those standards, or conditions related to those standards.

(2) Contents of reports.

(a) A report required by subsection (1) of this section shall describe the extent of exposure of individuals to radiation and radioactive material, including, as appropriate:

1. Estimates of each individual's dose;

2. The levels of radiation and concentrations of radioactive material involved;

3. The cause of the elevated exposures, dose rates, or concentrations; and

4. Corrective steps taken or planned to ensure against a recurrence, including the schedule for achieving conformance with applicable limits, ALARA constraints and environmental standards, and associated license or registration conditions.

(b) A report filed under subsection (1) of this section shall include for each individual exposed:

1. Name of the individual;

2. Social Security number; and

3. Date of birth.

(c) The report shall be prepared so that information is stated in a separate and detachable part.

(d) With respect to the limit for the embryo or fetus, the identifiers shall be of the declared pregnant woman.

(3) A licensee or registrant who makes a report under subsection (1) of this section shall submit the report, in writing, to the Manager of the Radiation Health [~~Control~~] Branch, Department for Health Services, 275 East Main Street, Frankfort, Kentucky 40621.

Section 41. Reports of Planned Special Exposures. (1) A licensee or registrant shall submit a written report to the Manager of the Radiation Health [~~Control~~] Branch, Department for Health Services, 275 East Main Street, Frankfort, Kentucky 40621, within thirty (30) days following a planned special exposure conducted in accordance with Section 7 of this administrative regulation.

(2) A licensee or registrant shall:

(a) Inform the Manager of the Radiation Health [~~Control~~] Branch that a planned special exposure was conducted;

(b) Indicate the date the planned special exposure occurred; and

(c) Provide the information required by Section 33 of this administrative regulation.

Section 42. Reports of Individual Monitoring. (1) This section shall apply to persons licensed or registered by the cabinet to:

(a) Possess or use sources of radiation for purposes of radiography authorized by 902 KAR 100:100;

(b) Receive radioactive waste from other persons for disposal pursuant to 902 KAR 100:022; or

(c) Possess or use, for processing or manufacturing for distribution required by 902 KAR 100:058, byproduct material in amounts exceeding one (1) of the following quantities:

	Quantity of Radionuclide[a] in curies
Cesium-137	1
Cobalt-60	1
Gold-198	100
Iodine-131	1
Iridium-192	10
Krypton-85	1,000
Promethium-147	10
Technetium-99m	1,000

[a]**If necessary,** the cabinet may require as a license or registration condition, KRS 211.842-211.852 or 902 KAR 100:015, Section 8, reports from licensees or registrants who are licensed or registered to use radionuclides not on this list, in quantities sufficient to cause comparable radiation levels.

(2) A licensee or registrant in a category listed in subsection (1) of this section shall:

(a) Submit an annual report of the results of individual monitoring carried out by the licensee for each individual for whom monitoring was required by Section 13 of this administrative regulation during that year; **and**

(b)**[**~~The licensee or registrant shall~~**]** Use Form NRC 5, **Occupational Dose Record for a Monitoring Period,** or other clear and legible record, which contains all the information required by Form NRC 5.

(3) A licensee or registrant may include additional data for individuals for whom monitoring may be provided, but not required.

(4) A licensee or registrant shall:

(a) File the report required by subsection (2) of this section covering the preceding year on or before April 30 of each year; and

(b) Submit the report to the Manager of the Radiation Health [~~Control~~] Branch, Department for Health Services, 275 East Main Street, Frankfort, Kentucky 40621.

Section 43. Protection Factors for Respirators. Protection Factors:**[**[a]**]**shall be determined as **established in 10 C.F.R. 20, Appendix A.[**~~described in 10 C.F.R. 20 Appendix A~~**]**

~~[Description[b]~~	~~Protection Factors[d]~~		~~Particulates, gases & vapors[e]~~	~~Tested & Certified Equipment~~
	~~Modes[c]~~	~~Particulates only~~		~~National Institute for Occupational Safety and Health & Mine Safety and Health Administration tests for permissibility~~
~~I. AIR-PURIFYING RESPIRATORS:~~				
~~Face-piece, half-mask[g]~~	~~N~~	~~10~~	~~-~~	~~30 C.F.R. Part 11, Subpart K.~~
~~Face-piece, full~~	~~NP~~	~~50~~	~~-~~	~~-~~
~~Face-piece, half-mask~~	~~PP~~	~~1000~~	~~-~~	~~-~~
~~full, or hood~~	~~-~~	~~-~~	~~-~~	~~-~~
~~II. ATMOSPHERE-SUPPLYING RESPIRATORS:~~				
~~1. Air-line respirator:~~				
~~Face-piece, half-mask~~	~~CF~~	~~-~~	~~1000~~	~~30 C.F.R. Part 11, Subpart J.~~
~~Face-piece, half-mask~~	~~D~~	~~-~~	~~5~~	~~-~~
~~Face-piece, full~~	~~CF~~	~~-~~	~~2000~~	~~-~~
~~Face-piece, full~~	~~D~~	~~-~~	~~5~~	~~-~~
~~Face-piece, full~~	~~PD~~	~~-~~	~~2000~~	~~-~~
~~Hood~~	~~CF~~	~~-~~	~~(h)~~	~~-~~
~~Suit~~	~~CF~~	~~-~~	~~(i)~~	~~(j)~~
~~2. Self-contained breathing apparatus (SCBA)~~				

~~Face-piece, full~~	~~D~~	~~-~~	~~50~~	~~30 C.F.R. 11, Subpart H.~~
~~Face-piece, full~~	~~PD~~	~~-~~	~~[k]10,000~~	~~-~~
~~Face-piece, full~~	~~RD~~	~~-~~	~~50~~	~~-~~
~~Face-piece, full~~	~~RP~~	~~-~~	~~[l]5,000~~	~~-~~
~~III. COMBINATION RESPIRATORS:~~				
~~A combination of air-purifying and Atmosphere-supplying respirators~~	~~Protection factor for type and mode of operation as listed above.~~		~~-~~	~~30 C.F.R. 11, Sec. 11.63(b)~~
			~~-~~	~~-~~
~~See footnotes.~~				

~~[FOOTNOTES~~

~~a. For use in the selection of respiratory protective equipment to be used only if the contaminants have been identified and the concentrations, or possible concentrations, are known.~~

~~b.Only for shaven faces and if nothing interferes with the seal of tight fitting facepieces against the skin. Hoods and suits shall be excepted. The mode symbols shall be defined as follows:~~

~~CF = continuous flow~~

~~D = demand~~

~~NP = negative pressure, that is, negative phase during inhalation~~

~~PD = pressure demand, that is, always positive pressure~~

~~PP = positive pressure~~

~~RD = demand, recirculating or closed circuit~~

~~RP = pressure demand, recirculating or closed circuit]~~

~~1. The protection factor shall be a measure of the degree of protection afforded by a respirator, defined as the ratio of the concentration of airborne radioactive material outside the respiratory protective equipment to that inside the equipment, usually inside the facepiece, under conditions of use. It shall be applied to the ambient airborne concentration to estimate the concentrations inhaled by the wearer according to the following formula:~~

~~Concentration inhaled =~~

~~Ambient airborne concentration~~

~~Protection factor~~

~~2. The protection factors apply:~~

~~(a) Only for individuals trained in using respirators and wearing properly fitted respirators that shall be used and maintained under supervision in a well-planned respiratory protective program.~~

~~(b) For air-purifying respirators only if high efficiency particulate filters, above 99.97% removal efficiency by thermally generated three-tenths (0.3) micron (□m) dioctyl phthalate (DOP) test or equivalent, shall be used in atmospheres not deficient in oxygen and not containing radioactive gas or vapor respiratory hazards.~~

~~(c) Adjustment shall not be made for the use of sorbents against radioactive material in the form of gases or vapors.~~

~~(d) For atmosphere-supplying respirators only if supplied with adequate respirable air. Respirable air shall be provided of the quality and quantity required in accordance with the National Institute for Occupational Safety and Health and the Mine Safety and Health Administration certification described in 30 C.F.R. Part 11. Oxygen and air shall not be used in the same apparatus.~~

~~e. Excluding radioactive contaminants that present an absorption or submersion hazard. For tritium oxide, approximately one-third (1/3) of the intake occurs by absorption through the skin so that an overall protection factor of less than two (2) shall be appropriate if atmosphere-supplying respirators are used to protect against tritium oxide. If the protection factor for respiratory protective equipment is five (5), the effective protection factor for tritium is about one and four-tenths (1.4); with protection factors of 10 (10), the effective factor for tritium oxide is about one and seven-tenths (1.7); and with protection factors of 100 or more, the effective factor for tritium oxide is about one and nine-tenths (1.9). Air-purifying respirators shall not be suitable for protection against tritium oxide. See also footnote l concerning supplied-air suits.~~

~~f. Canisters and cartridges shall not be used beyond service-life limitations.~~

~~g. Under-chin type only. This type of respirator shall not be satisfactory for use if it may be possible, that if an accident or emergency were to occur, for the ambient airborne concentrations to reach instantaneous values greater than ten (10) times the pertinent values in Table I, Column 3 of Section 44(9) of this administrative regulation. This type of respirator shall not be suitable for protection against plutonium or other high-toxicity materials. The mask shall be tested for fit prior to use, each time it is donned.~~

~~1. Equipment shall be operated in a manner that ensures that proper airflow rates are maintained. A protection factor of no more than 1000 may be utilized for tested-and-certified supplied-air hoods if a minimum air flow of six (6) cubic feet per minute (0.17 m^3/min) is maintained and calibrated air line pressure gauges or flow measuring devices are used. A protection factor of up to 2000 may be used for tested and certified hoods only if the air flow is maintained at the manufacturer's recommended maximum rate for the equipment, this rate is greater than six (6) cubic feet per minute (0.17 m^3/min) and calibrated air line pressure gauges or flow measuring devices are used.~~

~~2. The design of the supplied-air hood or helmet, with a minimum flow of six (6)~~

~~cubic feet per minute (0.17 m^3/min) of air, may determine its overall efficiency and the protection it provides. For example, some hoods aspirate contaminated air into the breathing zone if the wearer works with hands-over-head. This aspiration may be overcome if a short cape-like extension to the hood is worn under a coat or overalls.~~

~~Other limitations specified by the approval agency shall be considered before using a~~

~~hood in certain types of atmospheres. See footnote c.~~

~~i. Appropriate protection factors shall be determined, taking into account the design of the suit and its permeability to the contaminant under conditions of use. There shall be a standby rescue person equipped with a respirator or other apparatus appropriate for the potential hazards and communications equipment if supplied-air suits are used.~~

~~j. No approval schedules are currently available for this equipment. Equipment shall be evaluated by testing or on the basis of reliable test information.~~

~~k. This type of respirator may provide greater protection and be used as an emergency device in unknown concentrations for protection against inhalation hazards. External radiation hazards and other limitations to permitted exposure, for example, as skin absorption, shall be taken into account in these circumstances.~~

~~l. Quantitative fit testing shall be performed on each individual, and no more than 0.02% leakage shall be allowed with this type of apparatus. Perceptible outward leakage of gas from this or a positive pressure self-contained breathing apparatus shall be unacceptable because service life shall be reduced substantially. Special training in the use of this type of apparatus shall be provided to the wearer.~~

~~Note 1: Protection factors for respirators approved by the U.S. Bureau of Mines~~

~~and the National Institute for Occupational Safety and Health, according to applicable approvals for respirators for type and mode of use to protect against airborne radionuclides, may be used to the extent that they do not exceed the protection factors listed in this table. The protection factors listed in this table may not be appropriate to circumstances if chemicals or other respiratory hazards exist in addition to radioactive hazards. The selection and use of respirators for these circumstances shall take into account applicable approvals of the U.S. Bureau of Mines and the National Institute for Occupational Safety and Health.~~

~~Note 2: Radioactive contaminants, for which the concentration values in Table I, Column 3 of Section 44(9) are based on internal dose due to inhalation, may present external exposure hazards at higher concentrations. Under these circumstances, limitations on occupancy may have to be governed by external dose limits.]~~

Section 44. Annual Limits on Intake (ALI) and Derived Air Concentrations (DAC) of **radionuclides for occupational exposure, effluent concentrations, and concentrations for release to sanitary sewerage shall be determined as established in 10**

C.F.R. 20, Appendix B.[~~Radionuclides for Occupational Exposure; Effluent Concentrations; Concentrations for Release to Sanitary Sewerage.~~ shall be determined as described in 10 C.F.R. 20 Appendix B]~~[(1) For each radionuclide, subsection (9), Table I, of this section indicates the chemical form which shall be used for selecting the appropriate ALI or DAC value.~~

~~(2) The ALIs and DACs for inhalation are given for:~~

~~(a) An aerosol with an activity median aerodynamic diameter (AMAD) of one (1) µm; and~~

~~(b) Three (3) classes (D,W,Y) of radioactive material, which refer to their retention (approximately days, weeks, or years) in the pulmonary region of the lung. This classification applies to a range of clearance half times for:~~

~~1. D if less than ten (10) days;~~

~~2. W from ten (10) to 100 days; and~~

~~3. Y greater than 100 days.~~

~~(3) Subsection (9) of this section provides concentration limits for airborne and liquid effluents released to the general environment.~~

~~(4) Subsection (9) of this section provides concentration limits for discharges to sanitary sewerage.~~

~~(5) The values in Tables I, II, and III of subsection (9) of this section are presented in the computer "E" notation. In this notation:~~

~~(a) A value of 6E-02 represents a value of 6×10^{-2} or 0.06;~~

~~(b) 6E+2 represents 6×10^{2} or 600; and~~

~~(c) 6E+0 represents 6×10^{0} or 6.~~

~~(6) Occupational Values - Table I.~~

~~(a) The columns in Table I of subsection (9) of this section captioned "Oral Ingestion ALI," "Inhalation ALI," and "DAC," shall be applicable to occupational exposure to radioactive material.~~

~~(b) The ALIs in subsection (9) of this section are the annual intakes of a given radionuclide by "Reference Man" which result in a committed effective dose equivalent of:~~

~~1. Five (5) rem (0.05 Sv), stochastic ALI; or~~

~~2. Fifty (50) rem (five-tenths (0.5) Sv) to an organ or tissue, nonstochastic ALI.~~

~~(c) The stochastic ALIs were derived to result in a risk, due to irradiation of organs and tissues, comparable to the risk associated with deep dose equivalent to the whole body of five (5) rem (0.05 Sv).~~

~~1. The derivation includes multiplying the committed dose equivalent to an organ or tissue by a weighting factor, w_T;~~

~~2. This weighting factor is the proportion of the risk of stochastic effects resulting from irradiation of the organ or tissue (T) to the total risk of stochastic effects if the whole body is irradiated uniformly; and~~

~~3. The values of w_T are listed under the definition of weighting factor in 902 KAR 100:010.~~

~~(d) The nonstochastic ALIs were derived to avoid nonstochastic effects, such as prompt damage to tissue or reduction in organ function.~~

~~(e) A value of w_T = 0.06 shall be applicable to each of the five (5) organs or tissues in the "remainder" category receiving the highest dose equivalents, and the dose equivalents of other remaining tissues may be disregarded. The following portions of the GI tract shall be treated as four (4) separate organs:~~

~~1. Stomach;~~

~~2. Small intestine;~~

~~3. Upper large intestine; and~~

~~4. Lower large intestine.~~

~~(f) The dose equivalents for an extremity, skin, and lens of the eye shall not be considered in computing the committed effective dose equivalent, and shall be subject to limits that are met separately.~~

~~(g) If an ALI shall be defined by the stochastic dose limit, this value alone is given. If an ALI shall be determined by the nonstochastic dose limit to an organ, the organ or tissue to which the limit applies is shown, and the ALI for the stochastic limit is shown in parentheses. Abbreviated organ or tissue designations are used as follows:~~

~~1. LLI wall = lower large intestine wall;~~

~~2. St. wall = stomach wall;~~

~~3. Blad wall = bladder wall; and~~

~~4. Bone surf = bone surface.~~

~~(h) The use of the ALIs listed first, the more limiting of the stochastic and nonstochastic ALIs, shall ensure nonstochastic effects are avoided and the risk of stochastic effects is limited to an acceptably low value.~~

~~1. If, in a particular situation involving a radionuclide for which the nonstochastic ALI is limiting, use of that nonstochastic ALI may be considered unduly conservative, a licensee may use the stochastic ALI to determine the committed effective dose equivalent;~~

~~2. A licensee shall also ensure that the fifty (50) rem (five-tenths (0.5) Sv) dose equivalent limit for an organ or tissue shall not be exceeded by the sum of the external deep dose equivalent plus the internal committed dose equivalent to that organ, not the effective dose;~~

~~3. If there is no external dose contribution, the requirements of subparagraph 2 of this paragraph shall be demonstrated if the sum of the fractions of the nonstochastic ALIs (ALI_{ns}) that contribute to the committed dose equivalent to the organ receiving the highest dose shall not exceed unity, that is, □(intake in □Ci of each radionuclide/ALI_{ns}) □1.0; and~~

~~4. If there is an external deep dose equivalent contribution of H_d, then this sum shall be less than 1 - (H_d/50), instead of □1.0.~~

~~(i) The dose equivalents for an extremity, skin, and lens of the eye shall not be considered in computing the committed effective dose equivalent, but shall be subject to limits that shall be met separately.~~

~~(j) The derived air concentration (DAC) values are derived limits intended to control chronic occupational exposures. The relationship between the DAC and the ALI shall be given by:~~

~~1. DAC = ALI(in µCi)/(2000 hours per working year x 60 minutes/hour x 2×10^{4} ml per minute) = {ALI/2.4×10^{9}} µCi/ml, if 2×10^{4} ml is the volume of air breathed per minute at work by the reference man under working conditions of light work;~~

~~2. The DAC values relate to one (1) of two (2) modes of exposure with external submersion or the internal committed dose equivalents resulting from inhalation of radioactive materials. DACs based upon submersion shall be for immersion in a semi-infinite cloud of uniform concentration and shall apply to each radionuclide separately;~~

~~3. The ALI and DAC values include contributions to exposure by the single radionuclide named and in-growth of daughter radionuclides produced in the body by decay of the parent. Intakes that include both the parent and daughter radionuclides shall be treated by the general method appropriate for mixtures;~~

~~4. The values of ALI and DAC shall not apply directly if the individual both ingests and inhales a radionuclide, if the individual is exposed to a mixture of radionuclides by inhalation, ingestion, or both, or if the individual is exposed to both internal and external irradiation (see Section 13 of this administrative regulation). If an individual is exposed to radioactive materials which fall under several of the translocation classifications of the same radionuclide (for example, Class D, Class W, or Class Y), the exposure may be evaluated as if it were a mixture of different radionuclides; and~~

~~5. It shall be noted that the classification of a compound as Class D, W, or Y is based on the chemical form of the compound and does not take into account the radiological half-life of different radionuclides. Values are given for Class D, W, and Y compounds, even for very short-lived radionuclides.~~

~~(7) Effluent Concentrations - Table II.~~

~~(a) The columns in Table II of subsection (9) of this section captioned "Effluents," "Air," and "Water" shall be applicable to the assessment and control of dose to the public, particularly in the implementation of the provisions of 902 KAR 100:021, Section 3. The concentration values given in Columns 1 and 2 of Table II, subsection (9) of this section, are equivalent to the radionuclide concentrations which, if inhaled or ingested continuously over the course of a year, shall produce a total effective dose equivalent of 0.05 rem (five-tenths (0.5) mSv).~~

~~(b) Consideration of nonstochastic limits has not been included~~

~~in deriving the air and water effluent concentration limits because nonstochastic effects are presumed not to occur at or below the dose levels established for individual members of the public. For radionuclides, where the nonstochastic limit will be governing in deriving the occupational DAC, the stochastic ALI shall be used in deriving the corresponding airborne effluent limit in Table II, subsection (9) of this section. For this reason, the DAC and airborne effluent limits are not always proportional.~~

~~(c) The air concentration values listed in Table II, subsection (9) of this section, Column 1, were derived by one (1) of two (2) methods. For those radionuclides for which the stochastic limit is governing, the occupational stochastic inhalation ALI was divided by 2.4 x 10^9, relating the inhalation ALI to the DAC, as explained in subsection (6)(j)1, of this section and then divided by a factor of 300. The factor of 300 includes the following components:~~

~~1. A factor of fifty (50) to relate the 0.05 rem (0.05 Sv) annual occupational dose limit to the one-tenth (0.1) rem limit for members of the public;~~

~~2. A factor of three (3) to adjust for the difference in exposure time and the inhalation rate for a worker and for members of the public; and~~

~~3. A factor of two (2) to adjust the occupational values, derived for adults, so they are applicable to other age groups.~~

~~(d) For those radionuclides for which submersion, that is external dose, shall be limiting, the occupational DAC in Table I, Column 3, of subsection (9) of this section shall be divided by 219. The factor of 219 is composed of:~~

~~1. A factor of fifty (50), as described in subsection (7)(c) of this section;~~

~~2. A factor of 4.38 relating occupational exposure for 2,000 hours per year to full-time exposure (8,760 hours per year); and~~

~~3. An additional factor of two (2) for age considerations shall not be warranted in the submersion case.~~

~~(e) The water concentrations shall be derived by taking the most restrictive occupational stochastic oral ingestion ALI and dividing by 7.3 x 10^7. The factor of 7.3 x 10^7 (ml) includes the following components:~~

~~1. The factors of fifty (50) and two (2) described above; and~~

~~2. A factor of 7.3 x 10^5 (ml) which is the annual water intake of the reference man.~~

~~(f) This section provides groupings of radionuclides which shall be applicable to unknown mixtures of radionuclides. These groupings, including occupational inhalation ALIs and DACs, air and water effluent concentrations, and releases to sewer, require demonstrating the most limiting radionuclides in successive classes are absent. The limit for the unknown mixture shall be defined if the presence of one (1) of the listed radionuclides cannot be definitely excluded as being present from knowledge of the radionuclide composition of the source or from actual measurements.~~

~~(8) Releases to Sewers - Table III.~~

~~(a) The monthly average concentrations for release to sanitary sewerage shall be applicable to Section 11 of this administrative regulation.~~

~~(b) The concentration values were derived by taking the most restrictive occupational stochastic oral ingestion ALI and dividing by 7.3 x 10^6 (ml). The factor of 7.3 x 10^6 (ml) shall be composed of a factor of 7.3 x 10^5 (ml), the annual water intake by the reference man, and a factor of ten (10), that the concentrations, if the sewage released by the licensee was the only source of water ingested by a reference man during a year, shall result in a committed effective dose equivalent of five-tenths (0.5) rem.~~

~~FOOTNOTES:~~

~~[1]"Submersion" means that values given are for submersion in a hemispherical semi-infinite cloud of airborne material.~~

~~[2]These radionuclides have radiological half-lives of less than 2 hours. The total effective dose equivalent received during operations with these radionuclides may include a significant contribution from external exposure. The DAC values for all radionuclides, other than those designated Class "Submersion," are based upon the committed effective dose equivalent due to the intake of the radionuclide into the body and do NOT include potentially significant contributions to dose equivalent from external exposures. The licensee may substitute 1E-7 µCi/ml for the listed DAC to account for the submersion dose prospectively, but may use individual monitoring devices or other radiation measuring instruments that measure external exposure to demonstrate compliance with the limits. (See Section 43 of this administrative regulation)~~

~~[3]For soluble mixtures of U-238, U-234, and U-235 in air, chemical toxicity may be the limiting factor (Section 3(5) of this administrative regulation). If the percent by weight (enrichment) of U-235 is not greater than five (5), the concentration value for a forty (40) hour workweek is two-tenths (0.2) milligrams uranium per cubic meter of air average. For enrichment, the product of the average concentration and time of exposure during a forty (40) hour workweek shall not exceed 8E-3 (SA) µCi-hr/ml, if SA is the specific activity of the uranium inhaled. The specific activity for natural uranium is 6.77E-7 curies per gram U. The specific activity for other mixtures of U-238, U-235, and U-234, if not known, shall be:~~

~~SA = 3.6E-7 curies/gram U U-depleted~~

~~SA = {0.4 + 0.38 (enrichment) + 0.0034 (enrichment)^2} E-, enrichment □ 0.72~~

~~if enrichment is the percentage by weight of U-235, expressed as percent.~~

~~NOTE:~~

~~1. If the identity of each radionuclide in a mixture is known but the concentration of one or more of the radionuclides in the mixture is not known, the DAC for the mixture shall be the most restrictive DAC of a radionuclide in the mixture.~~

~~2. If the identity of each radionuclide in the mixture is not known, but it is known that certain radionuclides specified in this appendix are not present in the mixture, the inhalation ALI, DAC, and effluent and sewage concentrations for the mixture shall be the lowest values specified in this appendix for a radionuclide that is not known to be absent from the mixture; or~~

~~3. If a mixture of radionuclides consists of uranium and its daughters in ore dust (ten (10) µm AMAD particle distribution assumed) prior to chemical separation of the uranium from the ore, the following values may be used for the DAC of the mixture: 6E-11 µCi of gross alpha activity from uranium-238, uranium-234, thorium-230, and radium-226 per milliliter of air; 3E-11 µCi of natural uranium per milliliter of air; or forty-five (45) micrograms of natural uranium per cubic meter of air.~~

~~4. If the identity and concentration of each radionuclide in a mixture are known, the limiting values may be derived as follows: determine, for each radionuclide in the mixture, the ratio between the concentration present in the mixture and the concentration otherwise established in Section 44 of this administrative regulation for the specific radionuclide if not in a mixture. The sum of ratios for the radionuclides in the mixture shall not exceed "1" (i.e., "unity").~~

~~Example: If radionuclides "A," "B," and "C" are present in concentrations CA, CB, and CC, and if the applicable DACs are DAC_A, DAC_B, and DAC_C, respectively, then the concentrations shall be limited so that the following relationship exists:]~~

$$\frac{C_A}{DAC_A} + \frac{C_B}{DAC_B} + \frac{C_C}{DAC_C}$$

Section 45. Material Incorporated by Reference. (1) The following **material is incorporated by reference:**

(a) "Cumulative Occupational Dose History", NRC Form 4, June 1992;

(b) "Occupational Dose Record for a Monitoring Period", NRC Form 5, June 1992; and

(c) "Commodity Specification for Air", August 2004.

(2) This material may be inspected, copied, or obtained, subject to copyright law,[~~forms are incorporated by reference:~~

~~(a) NRC Form 4, "Cumulative Occupational Exposure History, "June 1992)"; and~~

~~(b) NRC Form 5, "Occupational Exposure Record for a Monitoring Period," (June 1992).~~

~~(2) The forms in subsection (1) of this section may be viewed or copied~~**]** at the Office of the Commissioner of Public Health, 275 East Main Street, Frankfort, Kentucky 40621, 8 a.m. until 4:30 p.m., Monday through Friday.

WILLIAM D. HACKER, MD FAAP, CPE, Commissioner

JANIE MILLER, Secretary
APPROVED BY AGENCY: July 13, 2011
FILED WITH LRC: July 14, 2011 at noon
CONTACT PERSON: Jill Brown, Office of Legal Services, 275 East Main Street 5 W-B, Frankfort, Kentucky 40601, phone 502-564-7905, fax 502-564-7573.

CABINET FOR HEALTH AND FAMILY SERVICES
Department for Public Health
Division of Public Health Protection and Safety
(As Amended at ARRS, October 11, 2011)

902 KAR 100:022. Licensing requirements for land disposal of radioactive waste.

RELATES TO: KRS 211.842-211.852, 211.990(4) 40 C.F.R. 261, **42 U.S.C. 2011 - 2297g-4,** Pub.L. **96-573, U.S. EO 11988**
STATUTORY AUTHORITY: KRS 194A.050, 211.090, 211.844, 211.846, 211.852
NECESSITY, FUNCTION, AND CONFORMITY: KRS 211.844 requires the [~~The~~] Cabinet for Health and Family Services [~~Human Resources~~] [~~is authorized by KRS 211.844~~] to provide by administrative regulation for the registration and licensing of the possession or use of sources of ionizing or electronic product radiation and the handling and disposal of radioactive waste. This administrative regulation establishes procedures, criteria, terms, and conditions upon which the cabinet issues licenses for the land disposal of radioactive wastes received from other persons.

Section 1.**[**~~Applicability. This administrative regulation shall apply to a person~~**]**[persons]**[**~~prescribing land disposal that~~**]**[which]**[**~~involves disposal in the uppermost portion of the earth, approximately thirty (30) meters, of radioactive waste received from another person~~**]**[~~other persons~~]**[**~~except:~~

~~(1) Disposal of "by-product material" as defined by~~[~~in~~]**[**~~902 KAR 100:010 in quantities greater than 10,000 kilograms and containing more than five (5) millicuries of radium-226; or~~

~~(2) Disposal of licensed material as provided for in 902 KAR 100:021.~~

~~Section 2.~~**]** Definitions. [~~As used in this administrative regulation, the following definitions apply:~~] (1) "Active maintenance" means a significant activity needed during the period of institutional control to maintain a reasonable assurance that the performance objectives in Section 18 and Section 19 of this administrative regulation are met. **This term[**"Active**]**[~~The active~~]**[**~~maintenance"~~**]** includes ongoing activities, such as the pumping and treatment of water from a disposal unit, or one (1) time measures, such as replacement of a disposal unit cover. **This term[**~~"Active maintenance"~~**]** does not include custodial activities, such as repair of fencing, repair or replacement of monitoring equipment, revegetation, minor additions to soil cover, minor repair of disposal unit covers, and general disposal site upkeep such as mowing grass.

(2) "Buffer zone" means a portion of the disposal site that is controlled by the licensee and that lies under the disposal units and between the disposal units and the boundary of the site.

(3) "Chelating agent" means:

(a) Amine[~~a mine~~] polycarboxylic acids, such as EDTA, DTPA, or hydroxy-carboxylic acids; and (b)[~~,~~] [~~gluconic acid and~~] Polycarboxylic [~~polycarboxylic~~] acids, such as citric acid, carbolic acid, or gluconic acid.

(4) "Commencement of construction" means clearing of land, excavation, or other substantial action that would adversely affect the environment of a land disposal facility. **This[**~~The~~**]** term does not mean disposal site exploration, necessary roads for disposal site exploration, borings to determine foundation conditions, or other preconstruction monitoring or testing to establish background information related to the suitability of the disposal site or the protection of environmental values.

(5) "Custodial agency" means an agency of the government designated to act on behalf of the government owner of the disposal site.

(6) "Disposal" means the isolation of radioactive wastes from the biosphere inhabited by man and his food chains by emplacement in a land disposal facility.

(7) "Disposal site" means that portion of a land disposal facility that [~~which~~] is used for disposal of waste. It consists of disposal units and a buffer zone.

(8) "Disposal unit" means a discrete portion of the disposal site into which waste is placed for disposal. For near-surface disposal the unit is usually a trench.

(9) "Engineered barrier" means a manmade structure or device that is intended to improve the land disposal facility's ability to meet the performance objectives in this administrative regulation [~~part~~].

(10) "Explosive material" means a [~~any~~] chemical compound, mixture, or device that [~~which~~] produces a substantial instantaneous release of gas and heat spontaneously or by contact with sparks or flame.

(11) "Hazardous waste" means those wastes designated as hazardous by U.S. Environmental Protection Agency regulations in 40 C.F.R. [~~C.F.R.~~] Part 261.

(12) "Hydrogeologic unit" means a soil or rock unit or zone that [~~which~~] by virtue of its porosity or permeability, or lack thereof, has a distinct influence on the storage or movement of ground water.

(13) "Inadvertent intruder" means a person who might occupy the disposal site after closure and engage in normal activities, such as agriculture, dwelling construction,
or other pursuits in which an individual might be unknowingly exposed to radiation from[~~for~~] the waste.

(14) "Intruder barrier" means:(a) A[~~a~~] sufficient depth of cover over the waste that inhibits contact with waste and helps to ensure that radiation exposures to an inadvertent intruder shall meet the performance objectives set forth in this administrative regulation**;[**~~:~~**]**[~~,~~] or

(b) Engineered [~~engineered~~] structures that provide equivalent protection to the inadvertent intruder.

(15) "Land disposal facility" means the land, buildings, or [~~and~~] equipment [~~which~~] [~~is~~] intended to be used for the disposal of radioactive wastes [~~into the subsurface of the land~~]. A "geologic repository" as defined by C.F.R. Parts 60 or 63 is not considered a land disposal facility.

(16) "Monitoring" means observing and making measurements to provide data to evaluate the performance and characteristics of the disposal site.

(17) "Near-surface disposal facility" means a land disposal facility in which radioactive waste is disposed of within approximately the upper thirty (30) meters of the earth's surface.

(18) "Pyrophoric liquid" means a liquid that ignites spontaneously in dry or moist air at or below 130 degrees Fahrenheit (fifty-four and five-tenths (54.5) degrees Centigrade). A pyrophoric solid is a solid material, other than one classed as an explosive, which under normal conditions is liable to cause fires through friction, retained heat from manufacturing or processing, or which can be ignited readily and if ignited burns so vigorously and persistently as to create a serious transportation, handling, or disposal hazard. Included are spontaneously combustible and water-reactive materials.

(19) "Site closure and stabilization" means those actions that are taken upon completion of operations that prepare the disposal site for custodial care and that assure that the disposal site will remain stable and will not need ongoing active maintenance.

(20) "Stability" means structural stability.

(21) "Surveillance" means monitoring and observation of the disposal site for purposes of visual detection of need for maintenance, custodial care, evidence of intrusion, and compliance with other license and regulatory requirements.

(22) "Waste" means those low-level radioactive wastes that are acceptable for disposal in a land disposal facility. For the purposes of this definition, low-level waste has the same meaning as in the Low-level Radioactive Waste Policy Act, Pub.L. [~~PL~~] 96-573**,** that is, radioactive waste not classified as high-level radioactive waste, transuranic waste, spent nuclear fuel, or by-product material as defined in Section 11e.(2) of the Atomic Energy Act, 42 U.S.C. 2011 **- 2297g-4[**~~et seq.~~**]**(uranium or thorium tailings and waste).

Section 2. Applicability. This administrative regulation shall apply to a person prescribing land disposal that involves

disposal in the uppermost portion of the earth, approximately thirty (30) meters, of radioactive waste received from another person except:

(1) Disposal of "by-product material" as defined by 902 KAR 100:010 in quantities greater than 10,000 kilograms and containing more than five (5) millicuries of radium-226; or

(2) Disposal of licensed material as provided for in 902 KAR 100:021.

Section 3. License Required. (1) A [~~No~~] person shall not [~~may~~] receive, possess, or [~~and~~] dispose of waste received from another person [~~other persons~~] at a land disposal facility unless authorized by a license issued by the cabinet as provided by this administrative regulation**[,]** and 902 KAR 100:021.

(2) Each person shall file an application with the cabinet as provided by 902 KAR 100:040, Section 4, and obtain a license as provided in this administrative regulation before commencing construction of a land disposal facility. Failure to comply with this requirement shall [~~may~~] be grounds for denial of a license.

Section 4. Content of Application. In addition to the requirements of set forth in 902 KAR 100:040, Section 5, an application to receive from others, possess, or [~~and~~] dispose of wastes shall consist of general information, specific technical information, institutional information, and financial information as set forth in Sections 5 through 9 of this administrative regulation.

Section 5. General Information. The general information shall include each of the following:

(1) Identity of the applicant including:

(a) The full name, address, telephone number, and description of the business or occupation of the applicant;

(b) If the applicant is a partnership, the name and address of each partner and the principal location where the partnership does business;

(c) If the applicant is a corporation or an unincorporated association, the state where it is incorporated or organized and the principal location where it does business and the names and addresses of its directors and principal officers; and

(d) If the applicant is acting as an agent or representative of another person in filing the application, all information required by this subsection shall [~~under subsection (1) of this section must~~] be supplied with respect to the other person.

(2) Qualifications of the applicant.

(a) The organizational structure of the applicant, both off-site and on-site, including a description of lines of authority and assignments of responsibilities, whether in the form of administrative directives, contract provisions, or otherwise;

(b) The technical qualifications, including training and experience, of the applicant and members of the applicant's staff to engage in the proposed activities. Minimum training and experience requirements for personnel filling key positions described in paragraph (a) of this subsection shall be provided;

(c) A description of the applicant's personnel training program; and

(d) The plan to maintain an adequate complement of trained personnel to carry out
waste receipt, handling, and disposal operations in a safe manner.

(3) A description of:

(a) The location of the proposed disposal site;

(b) The general character of the proposed activities;

(c) The types and quantities of radioactive waste to be received, possessed, or [~~and~~] disposed of;

(d) Plans for use of the land disposal facility for purposes other than disposal of radioactive wastes; and

(e) The proposed facilities and equipment.

(4) Proposed schedules for construction, receipt of waste, and first emplacement of waste at the proposed land disposal facility.

Section 6. Specific Technical Information. The specific technical information shall include the following information needed for demonstration that the performance objectives and the applicable technical requirements of this administrative regulation shall be met:

(1) A description of the natural and demographic disposal site characteristics as determined by disposal site selection and characterization activities. The description shall include geologic, geotechnical, hydrologic, meteorologic, climatologic, and biotic features of the disposal site and vicinity;

(2) A description of the design features of the land disposal facility and the disposal units. For near-surface disposal, the description shall include those design features
related to:

(a) Infiltration [~~infiltration~~] of water;

(b) Integrity [~~integrity~~] of covers for disposal units;

(c) Structural [~~structural~~] stability of backfill, wastes, and covers;

(d) Contact [~~contact~~] of wastes with standing water;

(e) Disposal [~~disposal~~] site drainage;

(f) Disposal [~~disposal~~] site closure and stabilization;

(g) Elimination [~~elimination~~] to the extent practicable of long-term disposal site maintenance;

(h) Inadvertent [~~inadvertent~~] intrusion; occupational exposures;

(i) Disposal [~~disposal~~] site monitoring; and

(j) Adequacy [~~adequacy~~] of the size of the buffer zone for monitoring and potential mitigative measures;

(3) A description of the principal design criteria and their relationship to the performance objectives;

(4) A description of the design basis natural events or phenomena and their relationship to the principal design criteria;

(5) A description of codes and standards that [~~which~~] the applicant has applied to the design and that [~~which~~] will apply to construction of the land disposal facilities;

(6) A description of the construction and operation of the land disposal facility. The description shall include, at [~~as~~] a minimum, the:

(a) Methods of construction of disposal units;

(b) Waste emplacement;

(c) [~~the~~] Procedures for and areas of waste segregation;

(d) Types of intruder barriers;

(e) On-site traffic and drainage systems;

(f) Survey control program;

(g) Methods and areas of waste storage; and

(h) Methods to control surface water and ground water access to the wastes. The description shall also include**[**~~a description of~~**]** the methods to be employed in the handling and disposal of wastes containing chelating agents or other nonradiological substances that might affect meeting the performance objectives of this administrative regulation;

(7) A description of the disposal site closure plan, including those design features that [~~which~~] are intended to facilitate disposal site closure and to eliminate the need for ongoing active maintenance;

(8) An identification of the known natural resources at the disposal site[,] whose exploitation could result in inadvertent intrusion into the low-level wastes after removal of active institutional control;

(9) A description of the kind, amount, classification, and specifications of the radioactive material proposed to be received, possessed, or [~~and~~] disposed of at the land disposal facility;

(10) A description of the quality control program for the determination of natural disposal site characteristics and for quality control during the design, construction, operation, and closure of the land disposal facility and the receipt, handling, and emplacement of waste. Audits and managerial controls shall be included;

(11) A description of the radiation safety program for control and monitoring of radioactive effluents to ensure compliance with the performance objective in Section 18 of this administrative regulation and occupational radiation exposure to ensure compliance with the requirements of 902 KAR 100:020 and to control contamination of personnel, vehicles, equipment, buildings, and the disposal site. Both routine operations and accidents shall be addressed. The program description shall include procedures, instrumentation, facilities, and equipment;

(12) A description of the environmental monitoring program to provide data to evaluate potential health and environmental impacts and the plan for taking corrective measures if migration of radionuclides is indicated; and

(13) A description of the administrative procedures that the applicant shall apply to control activities at the land disposal facility.

Section 7. Technical Analyses. The specific technical information shall also include the following analyses needed to demonstrate that the performance objectives of these administrative regulations shall be met:

(1) Pathways analyzed in demonstrating protection of the general population from releases of radioactivity shall include air, soil, ground water, surface water, plant uptake, and exhumation by burrowing animals. The analyses shall clearly:

(a) Identify and differentiate between the roles performed by the natural disposal site characteristics and design features in isolating and segregating the wastes; and[.]

(b) [~~The analyses shall clearly~~] Demonstrate that there is reasonable assurance that the exposures to humans from the release of radioactivity shall not exceed the limits set forth in Section 18 of this administrative regulation;

(2) Analyses of the protection of individuals from inadvertent intrusion shall include demonstration that there is reasonable assurance the waste classification and segregation requirements shall be met and that adequate barriers to inadvertent intrusion **shall[**~~will~~**]** be provided;

(3) Analyses of the protection of individuals during operations shall include assessments of expected exposures due to routine operations and likely accidents during handling, storage, or [~~and~~] disposal of waste. The analyses shall provide reasonable assurance that exposures shall be controlled to meet the requirements of 902 KAR 100:020; and

(4) Analyses of the long-term stability of the disposal site and the need for ongoing active maintenance after closure shall be based upon analyses of active natural processes such as erosion, mass wasting, slope failure, settlement of wastes and backfill, infiltration through covers over disposal areas and adjacent soils, and surface drainage of the disposal site. The analyses shall provide reasonable assurance that there shall not be a need for ongoing active maintenance of the disposal site following closure.

Section 8. Institutional Information. The institutional information submitted by the applicant shall include:

(1) A certification by the Commonwealth of Kentucky, or federal agency that [~~which~~] owns the disposal site, that the Commonwealth of Kentucky or federal agency is prepared to accept transfer of the license if the provisions of Section 15 of this administrative regulation are met, and shall assume responsibility for custodial care after site closure and postclosure observation and maintenance; and

(2) If the proposed disposal site is on land not owned by the Commonwealth of Kentucky or federal government, the applicant shall submit evidence that arrangements have been made for assumption of ownership in fee by the Commonwealth of Kentucky or federal agency before the cabinet issues a license.

Section 9. Financial Information. The financial information shall be sufficient to demonstrate that the financial qualifications of the applicant are adequate to carry out the activities for which the license is sought and meet other financial assurance requirements of this administrative regulation.

Section 10. Standards for Issuance of a License. A license for the receipt, possession, or [~~and~~] disposal of waste containing or contaminated with radioactive material shall be issued by the cabinet upon finding that:

(1) The issuance of the license shall not constitute an unreasonable risk to the health and safety of the public;

(2) The applicant is qualified by reason of training and experience to carry out the disposal operations requested in a manner that protects health and minimizes danger to life and property;

(3) The applicant's proposed disposal site;[,] disposal design;[,] land disposal facility operations;[,] including equipment, facilities, [~~and~~] procedures, disposal site closure, and postclosure institutional care are adequate to protect the public health and safety in that they provide reasonable assurance that the general population shall be protected from releases of radioactivity as specified in the performance objective in Section 18 of this administrative regulation;

(4) The applicant's proposed disposal site;[,] disposal site design;[,] land disposal facility operations;[,] including equipment, facilities, [~~and~~] procedures, disposal site closure, and postclosure institutional control are adequate to protect the public health and safety in that they shall provide reasonable assurance that individual inadvertent intruders are protected in accordance with the performance objective in Section 19 of this administrative regulation;

(5) The applicant's proposed disposal facility operations, including equipment, facilities, and procedures, are adequate to protect the public health and safety in that they shall provide reasonable assurance that the standards for radiation protection set out in 902 KAR 100:019 [~~100:020~~] shall be met;

(6) The applicant's proposed disposal site, disposal site design, land disposal facility operations, disposal site closure, and postclosure institutional care are adequate to protect the public health and safety in that they shall provide reasonable assurance that long-term stability of the disposed waste and the disposal site shall be achieved and shall eliminate to the extent practicable the need for ongoing active maintenance of the disposal site following closure;

(7) The applicant's demonstration provides reasonable assurance that the applicable technical requirements of this administrative regulation shall be met;

(8) The applicant's proposal for institutional control provides reasonable assurance that the care shall be provided for the length of time found necessary to ensure the findings in Subsection (3) through (6) of this section [~~Section 10(3) through (6) of this administrative regulation~~] and that the institutional control meets the requirements of Section 27 of this administrative regulation; and

(9) The information on financial assurances meets the requirements of this administrative regulation.

Section 11. Conditions of Licenses. (1) A license issued under this administrative regulation, or a right thereunder, may be transferred, assigned, or in any manner disposed of, either voluntarily or involuntarily, through transfer of control of the license to a person.[,] A transfer, assignment, or disposition shall occur only if the cabinet finds, after securing full information, that the transfer is in accordance with the provisions of the Act. The cabinet shall provide the approval or denial [~~and gives its consent~~] in writing in the form of a license amendment.

(2) The licensee shall submit a written statement [~~statements~~] under oath upon request of the cabinet, before termination of the license, and to enable the cabinet to determine if [~~whether or not~~] the license shall be modified, suspended, or revoked.

(3) The license shall be terminated only on the full implementation of the final closure plan as approved by the cabinet, including postclosure observation and maintenance.

(4) The licensee shall be subject to the provisions of the Act[,] [~~and to all rules~~], 902 KAR Chapter 100 [~~administrative regulations~~], and orders of the cabinet. The terms and conditions of the license shall be [~~are~~] subject to amendment, revision, or modification[,] [~~by reason of amendments to, or by reason of rules, administrative regulations, and orders issued in accordance with the terms of the Act~~].

(5) Each person licensed by the cabinet as authorized by this administrative regulation shall confine possession and use of materials to the locations and purposes authorized in the license.

(6) The licensee shall not dispose of waste until the cabinet has inspected the land disposal facility and has found it to be in conformance with the description, design, and construction described in the application for a license.

(7) The cabinet may incorporate in a license at issuance, or thereafter, by 902 KAR Chapter 100 [~~appropriate rule, administrative regulation,~~] or order,[,] additional requirements and conditions with respect to the licensee's receipt, possession, and disposal of waste [~~as it deems appropriate or~~] necessary in order to:

(a) Protect health or to minimize danger to life or property; and

(b) Require reports and the keeping of records[,] and to provide for inspections of activities under the license as [~~that may be~~] necessary or appropriate to effectuate the purposes of the Act and 902 KAR Chapter 100 [~~administrative regulations thereunder~~].

(8) The authority to dispose of wastes expires on the date stated in the license. An expiration date on a license applies only to the aboveground activities and to the authority to dispose of waste. Failure to renew the license shall not relieve the licensee of responsibility for carrying out site closure, postclosure observation, and transfer of the license to the site owner.

Section 12. Application for Renewal or Closure. (1) An application for renewal or
an application for closure shall be filed at least ninety (90) days prior to license expiration.

(2) An application [~~Applications~~] for renewal of a license shall be filed in accordance with Sections 4 through 9 of this administrative regulation. An application [~~Applications~~] for closure shall be filed in accordance with Section 13 of this administrative regulation. Information contained in previous applications, statements, or reports filed with the cabinet under the license may be incorporated by reference if the references are clear and specific.

(3) In a case in which a licensee has filed an application in proper form for renewal of a license, the license shall not expire until the cabinet has taken action on the application for renewal.

(4) In determining if [~~whether~~] a license shall be renewed, the cabinet shall apply the criteria set forth in Section 10 of this administrative regulation.

Section 13. Contents of Application for Closure. (1) Prior to final closure of the disposal site, or as otherwise directed by the cabinet, the applicant shall submit an application to amend the license for closure. This closure application shall include a final revision and specific details of the disposal site closure plan included as part of the license application submitted under Section 6(7) of this administrative regulation that includes each of the following:

(a) Additional geologic, hydrologic, or other data pertinent to the long-term containment of emplaced wastes obtained during the operational period;

(b) The results of tests, experiments, or other analyses relating to backfill of excavated areas;[~~,~~] closure and sealing;[~~,~~] waste migration and interaction with emplacement media;[~~,~~] or other tests, experiments, or analysis pertinent to the long-term containment of emplaced waste within the disposal site;

(c) Proposed revision of plans for:

1. Decontamination or dismantlement of surface facilities;
2. Backfilling of excavated areas; or
3. Stabilization of the disposal site for postclosure care; and[~~.~~]

(d) Significant new information regarding the environmental impact of closure activities and long-term performance of the disposal site.

(2) Upon review and consideration of an application to amend the license for closure submitted in accordance with subsection (1) of this section, the cabinet shall issue an amendment authorizing closure if there is reasonable assurance that the long-term performance objectives of this administrative regulation shall be met.

Section 14. Postclosure Observation and Maintenance. (1) The licensee shall observe, monitor, and carry out necessary maintenance and repairs at the disposal site until the site closure is complete and the license is transferred by the cabinet in accordance with Section 15 of this administrative regulation.[~~.~~]

(2) Responsibility for the disposal site shall be maintained by the licensee for **at least** five (5) years.

(3) A shorter or longer time period for postclosure observation and maintenance may be established and approved as part of the site closure plan, based on site-specific conditions.

Section 15. Transfer of License. Following closure and the period of postclosure observation and maintenance, the licensee may apply for an amendment to transfer the license to the disposal site owner. The license shall be transferred if the cabinet finds:

(1) The closure of the disposal site has been made in conformance with the licensee's disposal site closure plan, as amended and approved as part of the license;

(2) Reasonable assurance has been provided by the licensee that the performance objectives of this administrative regulation are met;

(3) Funds and necessary records for care shall be transferred to the disposal site owner;

(4) The postclosure monitoring program is operational for implementation by the disposal site owner; and

(5) The Commonwealth of Kentucky or federal agency that [~~which~~] shall assume responsibility for institutional control of the disposal site is prepared to assume responsibility and ensure that the institutional requirements found necessary under Section 10(8) of this administrative regulation shall be met.

Section 16. Termination of License. (1) Following a period of institutional control needed to meet the requirements found necessary under Section 10 of this administrative regulation, the licensee may apply for an amendment to terminate the license.

(2) This application shall be reviewed in accordance with the provisions of 902 KAR 100:040, Section 4.

(3) A license shall be [~~is~~] terminated only if the cabinet finds:

(a) The institutional control requirements found necessary under Section 10(8) of this administrative regulation have been met;

(b) Additional requirements resulting from new information developed during the institutional control period have been met; and

(c) Permanent monuments or markers warning against intrusion have been installed.

Section 17. General Requirement. Land disposal facilities shall be sited, designed, operated, closed, and controlled after closure so that reasonable assurance exists that exposures to individuals are within the limits established in the performance objectives in Section 18 through Section 21 of this administrative regulation.

Section 18. Protection of the General Population from Releases of Radioactivity. A concentration [~~Concentrations~~] of radioactive material that [~~which~~] may be released to the general environment in groundwater, surface water, air, soil, plants, or animals shall not result in an annual dose exceeding an equivalent of twenty-five (25) millirems to the whole body, seventy-five (75) millirems to the thyroid, and twenty-five (25) millirems to any other organ of a member of the public. Reasonable effort shall be made to maintain releases of radioactivity in effluents to the general environment as low as it is reasonably achievable.

Section 19. Protection of Inadvertent Intrusion. Design, operation, and closure of the land disposal facility shall ensure protection of an individual inadvertently intruding into the disposal site and occupying the site or contacting the waste any time after active institutional controls over the disposal site are removed.

Section 20. Protection of Individuals During Operations. Operations at the land disposal facility shall be conducted in compliance with the standards for radiation protection set out in 902 KAR 100:019 [~~100:020~~], except for releases of radioactivity in effluents from the disposal facility, which shall be governed by Section 18 of this administrative regulation. Every reasonable effort shall be made to maintain radiation exposures as low as is reasonably achievable.

Section 21. Stability of the Disposal Site After Closure. The disposal facility shall be sited, designed, used, operated, and closed to achieve long-term stability of the disposal site and to eliminate to the extent practicable the need for ongoing active maintenance of the disposal site following closure so that only surveillance, monitoring, or minor custodial care are required.

Section 22. Disposal Site Suitability Requirements for Land Disposal. Disposal site suitability for near-surface disposal. The following are the minimum characteristics a disposal site shall have to be acceptable for use as a near-surface disposal facility:

(1) The primary emphasis in disposal site suitability is isolation of wastes,[~~,~~] and the disposal site features that ensure that the long-term performance objectives are met.

(2) The disposal site shall be capable of being characterized, modeled, analyzed, and monitored.

(3) Within the region where the facility is to be located, a disposal site shall be selected so that projected population growth and future developments are not likely to affect the ability of the disposal facility to meet the performance objectives of this administrative regulation.

(4) Areas shall be avoided having known natural resources that [which], if exploited, would result in failure to meet the performance objectives of this administrative regulation.

(5) The disposal site shall be generally well drained and free of areas of flooding or frequent ponding. Waste disposal shall not take place in a 100-year flood plain, coastal high-hazard area, or wetland, as defined in U.S. Executive Order 11988, ["]Flood plain Management Guidelines.["]

(6) Upstream drainage areas shall be minimized to decrease the amount of run-off that [which] could erode or inundate waste disposal units.

(7)(a) The disposal site shall provide sufficient depth to the water table that ground water intrusion, perennial or otherwise, into the waste shall not occur.

(b) The cabinet shall [may] consider an exception to this requirement to allow disposal below the water table if it can be conclusively shown that disposal site characteristics may result in molecular diffusion being the predominant means of radionuclide movement and the rate of movement may result in the performance
objectives being met.

(c) In no case shall waste disposal be permitted in the zone of fluctuation of the water table.

(8) The hydrogeologic unit used for disposal shall not discharge ground water to the surface within the disposal site.

(9) Areas shall be avoided if tectonic processes, such as faulting, folding, seismic activity, or vulcanism may occur with a frequency and extent to significantly affect the ability of the disposal site to meet the performance objectives of this administrative regulation or may preclude defensible modeling and prediction of long-term impacts.

(10) Areas shall be avoided if surface geologic processes such as mass wasting, erosion, slumping, landsliding, or weathering occur with a frequency and extent to significantly affect the ability of the disposal site to meet the performance objectives of this administrative regulation, or may preclude defensible modeling and prediction of long-term impacts.

(11) The disposal site shall not be located where nearby facilities or activities could adversely impact the ability of the site to meet the performance objectives of this administrative regulation or significantly mask the environmental monitoring program.

Section 23. Disposal Site Design for Land Disposal. Disposal site design for near-surface disposal.

(1) Site design features shall be directed toward long-term isolation and avoidance of the need for continuing active maintenance after site closure.

(2) The disposal site design and operation shall be compatible with the disposal
site closure and stabilization plan and lead to disposal site closure that provides
reasonable assurance that the performance objectives shall be met.

(3) The disposal site shall be designed to complement and improve[, if where appropriate,] the ability of the disposal site's natural characteristics to assure that the performance objectives shall be met.

(4) Covers shall be designed to minimize [to the extent practicable] water infiltration, to direct percolating or surface water away from the disposed waste, and to resist degradation by surface geologic processes and biotic activity.

(5) Surface features shall direct surface water drainage away from disposal units at velocities and gradients that [which] shall not result in erosion that shall require ongoing active
maintenance in the future.

(6) The disposal site shall be designed to minimize [to the extent practicable] the contact of water with waste during storage, the contact of standing water with waste during disposal, and the contact of percolating or standing water with wastes after disposal.

Section 24. Land Disposal Facility Operation and Disposal Site Closure;[.] Near-surface Disposal [disposal] Facility [facility] Operation [operation] and Disposal [disposal] Site [site] Closure [closure].

(1) Wastes designated as Class A in 902 KAR 100:021 shall be segregated from other wastes by placing in disposal units that [which] are sufficiently separated from disposal units for the other waste classes so that an interaction between Class A wastes and other wastes shall not result in the failure to meet the performance objectives of this administrative regulation. This segregation is not necessary for Class A wastes if they meet the stability requirements in 902 KAR 100:021, Section 7[8](2).

(2) Wastes designated as Class C in 902 KAR 100:021 shall be disposed of so that the top of the waste is a minimum of five (5) meters below the top surface of the cover or shall be disposed of with intruder barriers that are designed to protect against an inadvertent intrusion for at least 500 years.

(3) Except as provided in subsection (1) of this section, only waste classified as Class A, B, or C shall be acceptable for near-surface disposal. All waste shall be disposed of in accordance with requirements of subsections (4) through (11) of this section.

(4) Wastes shall be emplaced in a manner that maintains the package integrity during emplacement, minimizes the void spaces between packages, and allows [permits] the void spaces to be filled.

(5) Void spaces between waste packages shall be filled with earth or other material to reduce future subsidence within the fill.

(6) Waste shall be placed and covered in a manner that limits the radiation dose rate at the surface of the cover to levels that at a minimum shall permit the licensee to comply with all provisions of 902 KAR 100:019 [100:020], Sections [Section] 10 [7] and 11, if [when] the license is transferred as authorized by Section 15 of this administrative regulation.

(7) The boundaries and locations of each disposal unit shall be accurately located and mapped by means of a land survey.

(8) Near-surface disposal units shall be marked in a way that the boundaries of each unit can be easily defined.

(9) Three (3) permanent survey marker control points, referenced to United States Geological Survey (USGS) or National Geodetic Survey (NGS) survey control stations, shall be established on the site to facilitate surveys.

(10) The USGS or NGS control stations shall provide horizontal and vertical controls as checked against USGS or NGS record files.

(11) [(8)] A buffer zone of land shall be maintained between any buried waste and the disposal site boundary and beneath the disposed waste. The buffer zone shall be of adequate dimensions to carry out environmental monitoring activities specified in Section 25[(4)] of this administrative regulation and take mitigative measures if needed.

(12) [(9)] Closure and stabilization measures set forth in the approved site closure plan shall be carried out as each disposal unit is filled and covered.

(13) [(10)] Active waste disposal operations shall not have an adverse effect on completed closure and stabilization measures.

(14) [(11)] Only wastes containing or contaminated with radioactive materials shall be disposed of at the disposal site.

(15) [(12)] A proposal [Proposals] for disposal of waste that is not generally acceptable for near-surface disposal because the waste form and disposal methods need to [must] be different, and in general more stringent than [that] those specified for Class C waste, may be submitted to the cabinet for approval.

Section 25. Environmental Monitoring. (1)(a) If [When] a license application is submitted, the applicant shall have conducted a preoperational monitoring program to provide basic environmental data on the disposal site characteristics.

(b) The applicant shall obtain information about the ecology, meteorology, climate, hydrology, geology, geochemistry, and seismology of the disposal site.

(c) For those characteristics that are subject to seasonal variation, data shall cover at least a twelve (12) month period.

(2)(a) During the land disposal facility site construction and operation, the licensee shall maintain an environmental monitoring program.

(b) Measurements and observations shall be made and recorded to provide data to evaluate the potential health and environmental impacts during both the construction and the operation of the facility and to enable the evaluation of long-term effects and the need for mitigative measures.

(c) The monitoring system shall be capable of providing early warning of releases of radionuclides from the disposal site before they leave the site boundary.

(3) After the disposal site is closed, the licensee responsible for postoperational surveillance of the disposal site shall maintain a monitoring system based on the operating history and the closure and stabilization of the disposal site. The monitoring system shall be capable of providing early warning of releases of radionuclides from the disposal site before they leave the site boundary.

(4) The licensee shall have plans for taking corrective measures if the environmental monitoring program detects migration of radionuclides that [which] would indicate that the performance objectives may not be met.

Section 26. Alternative Requirements for Design and Operations. The cabinet may, upon request or on its own initiative, authorize provisions other than those set forth in Sections 23 through 25 of this administrative regulation for the segregation and disposal of waste and for the design and operation of a land disposal facility on a specific basis[,] if it finds reasonable assurance of compliance with the performance objectives of this administrative regulation.

Section 27. Institutional Requirements. (1) Land ownership. Disposal of radioactive waste received from other persons may be permitted only on land owned, in fee, by the Commonwealth of Kentucky or federal government.

(2) Institutional control.

(a) The land owner or custodial agency shall carry out an institutional control program to physically control access to the disposal site following transfer of control of the disposal site from the disposal site operator.

(b) The institutional control program shall also include, in part [but not be limited to], carrying out an environmental monitoring program at the disposal site, periodic surveillance, minor custodial care, and other requirements as determined by the cabinet **in accordance with 10 C.F.R. 61.59,**[;] and administration of funds to cover the costs for these activities.

(c) The period of controls shall be determined by the cabinet **in accordance with 10 C.F.R. 61.59**, but controls may not be relied upon for more than 100 years following transfer of control of the disposal site to the owner.

Section 28. Alternative Requirements for Waste Classification and Characteristics. The cabinet licensing a low-level disposal facility may, upon request or on its own initiative, authorize other provisions for the classification and characteristics of waste on a specific basis[,] if, after evaluation of the specific characteristics of the waste, disposal site, or method of disposal, it finds reasonable assurance of compliance with the performance objectives specified in this administrative regulation.

Section 29. Applicant Qualifications and Assurances. Each applicant shall show that he [it] either possesses the necessary funds or has reasonable assurance of obtaining the necessary funds[,] or, by a combination of the two (2), to cover the estimated costs of conducting all licensed activities over the planned operating life of the project, including costs of construction and disposal.

Section 30. Funding for Disposal Site Closure and Stabilization. (1) The applicant shall provide assurances prior to the commencement of operations that sufficient funds shall be available to carry out disposal site closure and stabilization, including:

(a) Decontamination or dismantlement of land disposal facility structures;

(b) Closure and stabilization of the disposal site so that following transfer of the disposal site to the site owner, the need for ongoing active maintenance shall be [is] eliminated to the extent practicable and only minor custodial care, surveillance, and monitoring shall be [are] required; and

(c) Assurances shall be based on cabinet-approved cost estimates reflecting the cabinet-approved plan for disposal site closure and stabilization. The applicant's cost estimates shall take into account total costs that would be incurred if an independent contractor were hired to perform the closure and stabilization work.

(2) In order to avoid unnecessary duplication and expense, the cabinet may accept financial sureties that have been consolidated with earmarked financial or surety arrangements established to meet requirements of other federal or state agencies or local governing bodies for the [such] decontamination, closure, and stabilization. If the [The] cabinet accepts [may accept] these arrangements they shall be [only if they are considered] adequate to satisfy these requirements and that the portion of the surety that [which] covers the closure of the disposal site that shall be [is] clearly identified and committed for use in accomplishing these activities.

(3) The licensee's surety mechanism shall be submitted annually for review by the cabinet to assure that sufficient funds are available for completion of the closure plan, assuming that the work has to be performed by an independent contractor.

(4) The amount of surety liability shall change in accordance with the predicted cost of future closure and stabilization. Factors affecting closure and stabilization cost estimates include:

(a) Inflation;

(b) Increases in the amount of disturbed land;

(c) Changes in engineering plans;

(d) Closure and stabilization that has already been accomplished; and

(e) Other conditions affecting costs. This shall yield a surety that is at least sufficient at all times to cover the costs of closure of the disposal units that are expected to be used before the next license renewal.

(5)(a) The term of the surety mechanism shall be open unless it can be demonstrated that another arrangement would provide an equivalent level of assurance.

1. This assurance shall be provided with a surety mechanism [which is] written for a specified period of time (for example [e.g.], five (5) years) yet which shall be automatically renewed unless the party who issues the surety notifies the cabinet and the beneficiary (the site owner) and the principal (the licensee) not less than ninety (90) days prior to the renewal date of the [its] intention not to renew.

2. In this situation the licensee shall submit a replacement surety within thirty (30) days after notification of cancellation.

(b) If the licensee fails to provide a replacement surety acceptable to the cabinet, the site owner may collect on the original surety.

(6)(a) Proof of forfeiture shall not be necessary to collect the surety so that if the licensee could not provide an acceptable replacement surety within the required time, the surety shall be automatically collected prior to its expiration.

(b) The conditions described in this section [above] shall [would have to] be clearly stated on a surety instrument that [which] is not open-ended, and shall be agreed to by all parties. Liability under the surety mechanism shall remain in effect until the closure and stabilization program has been completed and approved by the cabinet and the license has been transferred to the site owner.

(7)(a) Financial surety arrangements [generally] acceptable to the cabinet include:

1. Surety bonds; [,]

2. Cash deposits; [,]

3. Certificates of deposit; [,]

4. Deposits of government securities; [,]

5. Escrow accounts; [,]

6. Irrevocable letters or lines of credit; [,]

7. Trust funds; [,] and

8. Combinations of the above [or other types of arrangements as may be approved by the cabinet].

(b) [However,] Self-insurance, or an arrangement that [which] essentially constitutes pledging the assets of the licensee, shall not satisfy the surety requirement for
private sector applicants because [since] this does not provide [provides no] additional assurance other than that which already exists through license requirements.

Section 31. Financial Assurances for Institutional Controls. (1) Prior to the issuance of the license, the applicant shall provide for cabinet review and approval or denial a copy of a binding arrangement, such as a lease, between the applicant and the disposal site owner that ensures that sufficient funds shall be available to cover the costs of monitoring and required maintenance during the institutional control period. The binding arrangement shall be reviewed periodically by the cabinet to ensure that changes in inflation, technology, and disposal facility operations are reflected in the arrangements.

(2) Subsequent changes to the binding arrangement specified in subsection (1) of this section relevant to institutional control shall be submitted to the cabinet for approval or denial.

Section 32. Maintenance of Records, Reports, and Transfers. (1) Each licensee shall maintain records and make reports in connection with the licensed activities as [~~may be~~] required by the conditions of the license or by 902 KAR Chapter 100 or [~~the rules, administrative regulations, and~~] orders of the cabinet.

(2)(a) A record [~~Records which are~~] required by 902 KAR Chapter 100 [~~these administrative regulations~~] or by license conditions shall be maintained for a period specified by the appropriate administrative regulation in 902 KAR Chapter 100 [~~regulations in this section~~] or by license condition.

(b) If a retention period is not otherwise specified, these records shall be maintained and transferred to the officials specified in subsection (5) of this section as a condition of license termination unless the cabinet otherwise authorizes [~~their~~] disposition.

(3)(a) A record that [~~Records which~~] shall be maintained as required by this section shall [~~may~~] be the original, [~~or~~] a reproduced copy, or microform [~~microfilm~~] if this reproduced copy or microform [~~microfilm~~] is capable of producing copy that is clear and legible at the end of the required retention period.

(b)1. The record may also be stored in electronic media with the capability of producing legible, accurate, and complete records during the retention period.

2. Records such as letters, drawings, and specifications shall include all pertinent information such as stamps, initials, and signatures.

(c) The licensee shall maintain adequate safeguards against tampering with and loss of records.

(4) If there is a conflict between the cabinet's administrative regulations, license condition, or other written cabinet approval or authorization pertaining to the retention period for the same type of record, the longest retention period specified shall take [~~takes~~] precedence.

(5) In addition to the requirements of subsections (1) through (4) of this section, copies of records of the location and the quantity of radioactive wastes contained in the disposal site shall be transferred upon license termination to the chief executive of the nearest municipality, the chief executive of the county in which the facility is located, the county zoning board or land development and planning agency, the Governor of the Commonwealth of Kentucky, [~~and~~] other Kentucky local agencies, and federal governmental agencies as designated by the cabinet when the license is terminated.

(6) Following receipt and acceptance of a shipment of radioactive waste, the licensee shall record:

(a) The date that the shipment is received at the disposal facility;

(b) The date of disposal of the waste; [~~,~~]

(c) A traceable shipment manifest number;

(d) A description of any engineered barrier or structural overpack provided for disposal of the waste;

(e) The location in the disposal site; [~~,~~]

(f) The condition of the waste packages as received; [~~,~~]

(g) Any discrepancies between materials listed on the manifest and those received; [~~,~~]

(h) The volume of pallets, bracing, or other shipping or onsite generated materials that are contaminated, and are disposed of as contaminated or suspect materials; and

(i) Any evidence of leaking or damaged packages or radiation or contamination levels in excess of limits specified in U.S. Department of Transportation and 902 KAR Chapter 100 [~~cabinet administrative regulations~~].

(7) The licensee shall briefly describe repackaging operations of the waste packages included in the shipment, plus other information required by the cabinet as a license condition.

(8) The licensee shall retain these records until the cabinet transfers or terminates the license that authorizes the activities **established[**~~described~~**]** in this section.

(9)[~~(7)~~] Each licensee authorized to dispose of radioactive waste received from other persons shall file a copy of its financial report or a certified financial statement annually with the cabinet in order to update the information base for determining financial qualifications.

(10)[~~(8)~~](a) Each licensee authorized to dispose of waste materials received from other persons, authorized by this administrative regulation, shall submit an annual report [~~reports~~] to the cabinet. Reports shall be submitted by the end of the first calendar quarter of each year for the preceding year**.[**~~;~~**]**

(b) The reports shall include:

1. Specification of the quantity of each of the principal radionuclides released to unrestricted areas in liquid and in airborne effluents during the preceding year;

2. The results of the environmental monitoring program;

3. A summary of licensee disposal unit survey and maintenance activities;

4. A summary, by waste class, of activities and quantities of radionuclides disposed of;

5. Instances in which observed site characteristics were significantly different from those described in the application for a license; and

6. Other information the cabinet may require **to protect public health and safety**.

(c) The report shall specifically cover instances in which the [~~If the~~] quantities of radioactive materials released during the reporting period, monitoring results, or maintenance performed are significantly different from those expected in the materials previously reviewed as part of the licensing action[~~, the report shall cover this specifically~~].

(11)(a) In addition to the other requirements of this section, the licensee shall store or have stored, manifest and other information pertaining to receipt and disposal or radioactive waste in an electronic recordkeeping system.

(b) The manifest information that shall be stored electronically is:

1. That required in 902 KAR 100:021, Sections 9 and 10, with the exception of shipper and carrier telephone numbers and shipper and consignee certifications; and

2. The information required in subsection (6) of this section.

(c) As specified in license conditions, the licensee shall report the stored information, or subsets of the information, on a computer-readable medium.

Section 33. Tests at Land Disposal Facilities. Each licensee shall perform, or allow [~~permit~~] the cabinet to perform, any tests**[**~~the cabinet deems~~**]** appropriate or necessary for the administration of this administrative regulation, including, in part [~~but not limited to~~], tests of:

(1) Radioactive wastes and facilities used for the receipt, storage, treatment, handling, or [~~and~~] disposal of radioactive wastes;

(2) Radiation detection and monitoring instruments; and

(3) Other equipment and devices used in connection with the receipt, possession, handling, treatment, storage, or disposal of radioactive waste.

Section 34. Cabinet Inspections of Land Disposal Facilities. (1) Each licensee shall:

(a) Afford to the cabinet at all reasonable times opportunity to inspect radioactive waste not yet disposed of[~~,~~] and the premises, equipment, operations, and facilities in which radioactive wastes are received, possessed, handled, treated, stored, or disposed;[~~.~~]

(b) [~~(2)~~] Provide the cabinet with the necessary equipment to meet the activities, such as monitoring, surveying, and recordkeeping as required by this section; and[~~.~~]

(c) [~~(3) Each licensee shall~~] Make available to the cabinet for inspection, upon [~~reasonable~~] notice, records kept by it as required

by this administrative regulation.

(2) Authorized representatives of the cabinet may copy and take away copies of[~~, for the cabinet's use,~~] any record required to be kept by this administrative regulation.

WILLIAM D. HACKER, MD FAAP, CPE, Commissioner
JANIE MILLER, Secretary

APPROVED BY AGENCY: July 13, 2011

FILED WITH LRC: July 14, 2011 at noon

CONTACT PERSON: Jill Brown, Office of Legal Services, 275 East Main Street 5 W-B, Frankfort, Kentucky 40601, phone 502-564-7905, fax 502-564-7573.

CABINET FOR HEALTH AND FAMILY SERVICES
Department for Public Health
Division of Public Health Protection and Safety
(As Amended at ARRS, October 11, 2011)

902 KAR 100:040. General provisions for specific licenses.

RELATES TO: KRS 211.842-211.852, 211.990(4), 10 C.F.R. 30.31-30.34, 30.36-30.39, 30.41, 30.50, 30.51, 30.61, 11 U.S.C. 101(2), (14)

STATUTORY AUTHORITY: KRS**[**~~13B.170,~~**]** 194A.050, 211.090(3), 211.844

NECESSITY, FUNCTION, AND CONFORMITY: KRS 211.844 requires [~~authorizes~~] the Cabinet for Health and Family Services to promulgate administrative regulations for regulating and licensing the possession or use of sources of ionizing or electronic product radiation and the handling and disposal of radioactive waste. This administrative regulation establishes general provisions for the issuance of **specific[**~~radioactive material~~**]** licenses to possess, use, or transfer radioactive material within Kentucky.

Section 1. License Requirement. Except for persons exempted by 902 KAR 100:015 and [~~902 KAR~~] 100:045, a person shall not manufacture, produce, receive, possess, use, transfer, own, or acquire radioactive material except as authorized in a specific or general license issued in accordance with 902 KAR Chapter 100. Authority to transfer possession or control by the manufacturer;[~~,~~] processor;[~~,~~] or producer of equipment, devices,[~~or~~] commodity, or other products containing radioactive material whose subsequent possession, use, transfer, or[~~and~~] disposal by other persons are exempted from regulatory requirements, may be obtained only from the U.S. Nuclear Regulatory Commission, Washington, D. C., 20555.

Section 2. Types of Licenses. (1) Licenses for radioactive material shall be of two (2) types:

(a) General; or [~~and~~]

(b) Specific.

(2) Except as specified in 902 KAR 100:050, general licenses shall be:

(a) Effective without the filing of an application with the cabinet or the issuance of licensing documents to the licensee; and

(b) Subject to other applicable requirements of 902 KAR Chapter 100 and limitations of 902 KAR 100:050.

(3) Specific licenses shall require:

(a) The submission of an application to the cabinet; and

(b) The issuance of a licensing document by the cabinet.

(4) **Each license shall be**[~~The license shall be~~] subject [~~subject~~] to applicable requirements of 902 KAR Chapter 100 and to limitations specified in the licensing document.

Section 3. Filing of Application for a Specific License. (1) An application for **["]**specific license**["]** shall be filed with the Cabinet for Health and Family Services on ["]Form RPS-7["], incorporated by reference.

(2)(a) [~~The cabinet may at a time~~] After the filing of the original application, or [~~and~~] before the expiration of the license if the applicant has already been granted, the Cabinet may require additional information [~~further statements~~] in order [~~to enable the cabinet~~] to determine if [~~whether~~]:

1. The application is to [~~shall~~] be granted or denied; or

2. A license is to [~~shall~~] be modified or revoked.

(b) Prelicensing visits may be made to the applicant's facility for the purpose of obtaining information in addition to that furnished in the original application.

(c) If the applicant or licensee fails to respond within **thirty (30)[**~~30~~**]** days of receipt to a written request, [~~in writing, forwarded by certified mail,~~] for additional information [~~within thirty (30) days of the date of the receipt of the request, or within another specified time if health and safety are threatened~~], the cabinet shall suspend, modify, or revoke the license in accordance with 902 KAR 100:170, or shall deny the application.

(3) The application shall be signed by the applicant or licensee or a person duly authorized to act for and on his behalf.

(4) An application for a license may include a request for a license authorizing one (1) or more activities if the application specifies the additional activities and complies with the provisions of 902 KAR Chapter 100 relating to specific licenses.

(5)(a) The applicant may incorporate in the application, by reference, information contained in previous applications, statements, or reports filed with the cabinet, if references are clear and specific.

(b) Information provided to the cabinet by an applicant or licensee, or information required to be maintained by statute, by 902 KAR Chapter 100, cabinet orders, or license conditions, shall be complete and accurate in all aspects.

(6) An application for a specific license to use radioactive material in the form of a sealed source or in a device that contains the sealed source shall:

(a) Identify the source or device by manufacture and model number as registered with:

1. The cabinet;

2. The U.S. Nuclear Regulatory Commission; or

3. An agreement state; and [~~or~~]

(b) Contain the information identified in 902 KAR 100:058, Section 1.

(7) An application for a specific license shall contain, if required by the administrative regulation referenced:

(a) 1. A proposed decommissioning funding plan; or

2.[~~(b)~~] A certification of financial assurance for decommissioning in accordance with 902 KAR 100:042; and

(b)[~~(c)~~] An emergency plan for responding to a release in accordance with 902 KAR 100:041.

Section 4. General Requirements for the Issuance of a Specific License. (1) A license application shall be approved if the cabinet determines:

(a) The applicant is qualified by reason of training and experience to use the radioactive material in question for the purpose requested, in accordance with 902 KAR Chapter 100, and in a manner that [~~as to~~] minimizes [~~minimize~~] danger to public health and safety or property;

(b) The applicant's proposed equipment, facilities, and procedures are adequate to minimize danger to public health and safety or property;

(c) The issuance of the license will not be adverse to the health and safety of the public; and

(d) The applicant satisfies applicable special requirements in 902 KAR Chapter 100.

(2) For an application for a license to receive and possess radioactive material that [~~which~~] the cabinet determines will significantly affect the quality of the environment, the following shall apply:

(a) The secretary of the cabinet or his designee shall, before commencement of construction of the plant or facility in which the activity is to be conducted, weigh the environmental, economic, technical, and other benefits against environmental costs and shall consider available alternatives.

(b) The secretary shall [~~may~~], if [~~where~~] appropriate, approve a license modified by conditions designed to protect environmental values.

(c) Commencement of construction prior to cabinet determination shall be grounds for denial of a license to receive and possess radioactive material in the plant or facility. **[**~~1.~~**]** As used in this sub-

section, **"commencement of construction" shall include clearing of land, excavation, or other substantial action that would adversely affect the environment of a site, but shall not include[**~~the term "commencement of construction" means clearing of land, excavation, or other substantial action that would adversely affect the environment of a site.~~

~~2. The term shall not mean~~**]** site exploration, necessary roads for site exploration, borings to determine foundation conditions, or other preconstruction monitoring or testing to establish background information related to the suitability of the site or the protection of environmental values.

(3)(a) The licensee shall notify the cabinet in writing, immediately following the filing of a voluntary or involuntary petition for bankruptcy under [~~a chapter of~~] Title 11 of the United States Code by or against:

1. The licensee;

2. An entity, **as defined in 11 U.S.C. 101(14) or (15)[**~~is defined in U.S.C. § 101(15)~~**][**~~as that term is defined in 11 U.S.C.~~**[**~~or section 101(14)~~**]**, controlling the licensee or listing the license or licensee as property of the estate; or

3. An affiliate, as [~~that term is~~] defined in 11 **U.S.C.[**~~U.S.C.§ or Section~~**]** 101(2), of the licensee.

(b) The notification shall indicate:

1. The bankruptcy court in which the petition for bankruptcy was filed; and

2. The date and case number of the filing of the petition.

Section 5. Issuance of Specific Licenses. (1) Upon a determination that an application meets the requirements of KRS 211.842 to 211.852 and 902 KAR Chapter 100, the cabinet shall issue a specific license authorizing the proposed activity in a form containing **necessary and appropriate** conditions and limitations**[**~~the cabinet deems appropriate or necessary~~**]**.

(2) The cabinet may incorporate in a license when issued, or thereafter by appropriate rule, 902 KAR Chapter 100, or order, or as specified in Section 13 of this administrative regulation, additional requirements and conditions with respect to the licensee's receipt, possession, use, and transfer of radioactive material subject to 902 KAR Chapter 100 as it deems appropriate or necessary in order to:

(a) Minimize danger to public health and safety or property;

(b) Require reports are maintained and the keeping of records, and provide for inspections of activities under the license as may be appropriate or necessary; and

(c) Prevent loss or theft of licensed material.

Section 6. Specific Terms and Conditions of Licenses. (1) A license issued pursuant to this administrative regulation shall be subject to the provisions of KRS 211.842 to 211.852, 902 KAR Chapter 100, and orders of the cabinet.

(2) Neither the license nor a right under the license shall be assigned or
otherwise transferred in violation of the provisions of KRS 211.842 to 211.852.

(3) A licensee [~~person licensed by the cabinet~~] under 902 KAR Chapter 100 shall confine [~~his~~] use and possession of the licensed radioactive material [~~licensed~~] to the locations and purposes authorized in the license.

(4) A portable gauge licensee shall use a minimum of two (2) independent physical controls that form tangible barriers to secure portable gauges from unauthorized removal, if portable gauges are not under the control and constant surveillance of the licensee.

Section 7. Expiration and Termination of Licenses. (1) Except as specified in subsection (4) of this section and in Section 8[~~(2)~~] of this administrative regulation, a specific license shall expire at midnight on the day, [~~in the~~] month, and year stated in the license.

(2) A licensee shall promptly notify the cabinet [~~promptly~~], in writing, and request termination of the license, if the licensee decides to terminate activities involving licensed materials [~~authorized under the license~~]. This notification and request for termination of the license shall include:

(a) The reports and information specified in subsection (3)(d) and (e) of this section; and

(b) A plan for completion of decommissioning, if required[~~,~~] by 902 KAR 100:042 or by license condition.

(3) If a licensee does not submit an application for license renewal under Section 8[~~(2)~~] of this administrative regulation, the licensee, on or before the expiration date specified in the license, shall:

(a) Terminate use of radioactive material;

(b) Remove radioactive contamination to the extent practicable except for those procedures covered by subsection (4) of this section;

(c) Properly dispose of radioactive material;

(d) File the [~~"~~]Disposition of Radioactive Material[~~"~~],"Form RPS-10", with the Cabinet for Health and Family Services; and

(e) [~~Prior to license termination, a licensee authorized~~] If licensed to possess radioactive material with a half-life greater than 120 days[~~,~~] in an unsealed form, [~~shall~~] forward [~~the following records~~] to the cabinet:

1. Records of disposal of radioactive material made pursuant to 902 KAR 100:021, Sections 3-6, including burials authorized before January 28, 1981; and

2. Records required by 902 KAR 100:019, Section 31(2)(d).

(f) If licensed activities are transferred or assigned in accordance with 902 KAR 100:040, Section 6, a licensee authorized to possess radioactive material with a half-life greater than 120 days, in an unsealed form, shall transfer the following records to the new licensee. The new licensee shall [~~will~~] be responsible for maintaining these records until the license is terminated:

1. Records of disposal of licensed material made pursuant to 902 KAR 100:021, Sections 3 through 6 of this administrative regulation, including burials authorized before January 28, 1981; and

2. Records required by 902 KAR 100:019, Section 31(2)(d).

(g) Prior to license termination, a licensee shall forward the records required by 902 KAR 100:042, Section 15(3)[~~(7)~~], to the cabinet.

(4) A specific license continues in effect, beyond the expiration date if necessary, with respect to possession of radioactive material until the cabinet notifies the licensee in writing that the license shall be terminated. During this time, the licensee shall:

(a) Limit actions involving radioactive material to those related to decommissioning; and

(b) Continue to control entry to restricted areas until they are suitable for release for unrestricted use and the cabinet notifies the licensee in writing that the license shall be terminated.

Section 8. Renewal of License. If a licensee has filed,[~~more than thirty (30) days prior to expiration of his existing license,~~] an application in proper form for renewal or for a new license authorizing the same activities more than thirty (30) days prior to expiration of an existing license, the existing license shall not expire until the application has been finally determined by the cabinet.

Section 9. Amendment of Licenses. (1) An application for amendment of a license at the request of the licensee shall specify the respects in which the licensee desires the license to be amended and the grounds for the amendment.

(2) Every five (5) years or at the request of the cabinet, the licensee shall be required to amend the license in its entirety by submitting a complete application.

Section 10. Cabinet Action on Applications to Renew or Amend. In considering an application by a licensee to renew or amend his license, the cabinet shall apply the requirements of 902 KAR Chapter 100.

Section 11. Inalienability of Licenses. A license issued or granted under 902 KAR Chapter 100 or right to possess or utilize radioactive material granted by a license issued under 902 KAR Chapter 100 shall not be transferred, assigned, or otherwise disposed of, through transfer of control of a license to a person unless the cabinet, after securing full information, finds that the transfer is in accordance with the requirements of 902 KAR Chapter 100 and gives its consent in writing.

Section 12. Transfer of Material. (1) A licensee shall not trans-

fer radioactive material except as authorized by this administrative regulation.

(2) Except as stated in the license and subject to the provisions of subsections (3) and (4) of this section, a licensee may transfer radioactive material subject to the acceptance of the transferee to a person:

(a) Exempt from the requirements for a license as specified in this administrative regulation to the extent permitted under the exemption;

(b) Authorized to receive radioactive material under terms of a general license as specified in 902 KAR 100:050, or its equivalent, or a specific license or equivalent licensing document, issued by the cabinet, the U.S. Nuclear Regulatory Commission, or an agreement state [~~Agreement State~~];

(c) Otherwise authorized to receive radioactive material by the federal government or an agency thereof, the cabinet, or an agreement state [~~Agreement State~~]; or

(d) As otherwise authorized by the cabinet in writing.

(3) Before transferring radioactive material to a specific licensee of the cabinet, U.S. Nuclear Regulatory Commission, or an agreement state [~~Agreement State~~] or to a general licensee who is required to register with the cabinet, U.S. Nuclear Regulatory Commission, or an agreement state [~~Agreement State~~] prior to receipt of the radioactive material, the licensee transferring the material shall verify that the transferee's license authorizes the receipt of the type, form, and quantity of radioactive material to be transferred.

(4) The following methods for the verification required by this administrative regulation shall be acceptable:

(a) The transferor may have in his possession, and read, a current copy of the transferee's specific license or registration certificate;

(b) The transferor may have in his possession a written certificate by the transferee that he is authorized by license or registration certificate to receive the type, form, and quantity of radioactive material to be transferred, specifying the license or registration certificate number, issuing agency, and expiration date;

(c) For emergency shipments, the transferor may accept oral certification by the transferee that the transferee is authorized by license or registration certificate to receive the type, form, and quantity of radioactive material to be transferred, specifying the license or registration certificate number, issuing agency, and expiration date, if the oral certification is confirmed in writing within ten (10) days of the shipment.

(d) The transferor may obtain other sources of information compiled by a reporting service from official records of the cabinet, the U.S. Nuclear Regulatory Commission, or the licensing agency of an agreement state [~~Agreement State~~] as to the identity of licensees and the scope and expiration dates of licenses and registration; or

(e) If none of the methods of verification described in paragraphs (a) through (d) of this subsection are readily available or if a transferor desires to verify that information received by one (1) of the methods is correct or up-to-date, the transferor may obtain and record confirmation from the cabinet, U.S. Nuclear Regulatory Commission, or the licensing agency of an agreement state [~~Agreement State~~] that the transferee is licensed to receive the radioactive material.

(5) Shipment and transport of radioactive material shall meet the requirements of 902 KAR Chapter 100.

Section 13. Modification, Revocation, and Suspension of Licenses. (1) The terms and conditions of a license shall be subject to amendment, revision, or modification, or the license may be suspended or revoked by reason of amendments to or violation of KRS 211.842 to 211.852, 902 KAR Chapter 100, or orders issued by the cabinet.

(2) A license may be revoked, suspended, or modified, in whole or in part, for:

(a) A material false statement in the application or in a statement of fact required under provisions of KRS 211.842 to 211.852;

(b) A condition revealed by application or statement of fact;

(c) A report, record, or inspection, or other means that [~~which~~] would warrant the cabinet to refuse to grant a license on an original application; or

(d) A violation of, or failure to observe the terms and conditions of KRS 211.842 to 211.852, [~~or of~~] the license, [~~or of rules,~~] 902 KAR Chapter 100, or orders of the cabinet.

(3) Except in a case of willful violation or in which the public health, interest, or safety requires otherwise, a license shall not be modified, suspended, or revoked unless, prior to the institution of proceedings**.[**~~:~~**]**

(a) The cabinet shall notify the licensee in writing, according to 902 KAR 1:400, Section 1, of the fact or conduct that may warrant cabinet action on the license. [~~A fact or conduct which may warrant cabinet action shall have been called to the attention of the licensee, in writing; and~~]

(b) The cabinet shall provide the licensee with the opportunity for a conference and conference report according to 902 KAR 1:400**,** Sections 1 through 3.[~~The licensee shall have been accorded an opportunity to demonstrate or achieve compliance with lawful requirements.~~]

(c) If no conference is requested within the timeframe, the Cabinet shall notify the licensee in writing according to 902 KAR 1:400 Section 2(a)-(c) and Section 3(2) of its final action and the licensee's right to appeal.

(4) A licensee whose license is suspended or revoked, shall have a right to a hearing under [~~in a manner established in~~] 902 KAR 1:400, Section 4 by, by making a written request as described in that Section.

Section 14. Retention of Records. (1) A person who receives radioactive material in accordance with a license issued under 902 KAR Chapter 100 shall keep records showing the receipt, transfer, and disposal of radioactive material.

(2)(a) Records of receipt of radioactive material that [~~which~~] are required by subsection (1) of this section shall be maintained as long as the licensee retains possession of the radioactive material and for two (2) years following transfer or disposal of the radioactive material.

(b) Records of transfer of radioactive material shall be maintained by the licensee who transferred the material for five (5) years after the transfer.

(c) Records of disposal of radioactive material shall be maintained in accordance with 902 KAR 100:021.

(3) Other records required by 902 KAR Chapter 100 or by a license condition shall be maintained for the period specified in 902 KAR Chapter 100. If the retention period is not specified by 902 KAR Chapter 100 or a license condition, the records shall be permanently maintained unless the cabinet authorizes [~~their~~] disposition upon proper application for [~~their~~] destruction.

(4) Records required to be maintained by 902 KAR Chapter 100 shall [~~may~~] be:

(a) The original, a reproduced copy, or a microform if duly authenticated by authorized personnel and capable of producing a clear and legible copy after storage for the period specified by 902 KAR Chapter 100; or

(b) In electronic media with the capability for producing legible, accurate, and complete records during the required retention period.

(5) Records, including letters, drawings, and specifications, shall include pertinent authentication stamps, initials, or signatures. The licensee shall maintain adequate safeguards against tampering with, and loss of, records.

Section 15. Reporting Requirements. (1) Immediate report. A licensee shall notify the Cabinet for Health and Family Services, Radiation Health [~~and Toxic Agents~~] Branch, no [~~as soon as possible, but not~~] later than four (4) hours, after the discovery of an event that prevents or overcomes immediate protective actions necessary to avoid exposure to radiation or radioactive materials or a release of radioactive materials that may exceed regulatory limits. An event includes a fire, explosion, or toxic gas release.

(2) Twenty-four (24) hour report. A licensee shall notify the Cabinet for Health and Family Services, Radiation Health [~~Control~~] Branch within twenty-four (24) hours after the discovery of an event involving radioactive material, as follows:

(a) An unplanned contamination event that:

1. Requires access to the contaminated area, by workers or the public, to be restricted for more than twenty-four (24) hours by imposing additional radiological controls or by prohibiting entry into the area;

2. Involves a quantity of material greater than five (5) times the lowest annual limit on intake specified in 10 C.F.R. 20**,** Appendix B [~~902 KAR 100:019, Section 44~~], for the material; and

3. Requires[~~Has~~] access to the area restricted for a reason other than to allow isotopes with a half-life of less than twenty-four (24) hours to decay prior to decontamination;[~~.~~]

(b) An event in which equipment is disabled or fails to function as designed**,** if:

1. The equipment is required by administrative regulation or license condition to prevent a release exceeding regulatory limits, to prevent an exposure to radiation or radioactive
material exceeding regulatory limits, or to mitigate the consequences of an accident;

2. The equipment is required to be available and operable if it is disabled or fails to function; and

3. Redundant equipment is not available and operable to perform the required safety function;[~~.~~]

(c) An event that requires unplanned medical treatment, at a medical facility, of an individual with spreadable radioactive contamination on the individual's clothing or body; or[~~.~~]

(d) An unplanned fire or explosion damaging radioactive material or a device, container, or equipment containing radioactive material**,** if:

1. The quantity of material involved is greater than five (5) times the lowest annual limit on intake specified in 10 C.F.R. 20**,** Appendix B [~~902 KAR 100:019, Section 44~~], for the radioactive material; and

2. The damage affects the integrity of the radioactive material or its container.

(3) A report [~~Reports~~] by a licensee [~~licensees~~] in response to the requirements of this section shall be made as follows:

(a) A licensee [~~Licensees~~] shall make a report [~~reports~~] as required by subsections (1) and (2) of this section by telephone to the Cabinet for Health and Family Services, Radiation Health [~~and Toxic Agents~~] Branch at (502) 564-3700 from 8 a.m.-4:30 p.m. Eastern Time Monday through Friday, or [~~and~~] at (800) 255-2587 [~~(502) 564-7815~~] at other hours. To the extent that the information is available at the time of notification, the information provided in these reports shall include:

1. The caller's name and call back telephone number;

2. A description of the event, including date and time;

3. The exact location of the event;

4. The isotopes, quantities, and chemical and physical form of the radioactive material involved; and

5. Available personnel radiation exposure data.

(b) A licensee who makes a telephone report shall submit a written follow-up report within thirty (30) days of the initial report. A written report prepared pursuant to another administrative regulation of 902 KAR Chapter 100 may be submitted to fulfill this requirement, if the report contains the necessary information and the appropriate distribution is made. The report shall be sent to the Manager, Radiation Health [~~and Toxic Agents~~] Branch, 275 East Main Street, [~~Mail Stop HS 2E-D,~~] Frankfort, Kentucky 40621. The report shall include the following:

1. A description of the event, including the probable cause and the manufacturer and model number, if applicable, of equipment that failed or malfunctioned;

2. The exact location of the event;

3. The isotopes, quantities, and chemical and physical form of the radioactive material involved;

4. Date and time of the event;

5. Corrective actions taken or planned and results of evaluations or assessments; and

6. The extent of every exposure of every individual to radiation or to a radioactive material, without identification of any individual by name.

Section 16. Material Incorporated by Reference. (1) The following material is [~~forms are~~] incorporated by reference:

(a) Cabinet for Health and Family Services Form RPS-7 "Application for Radioactive Material License"**, 6/2011[**~~2/2011~~**]**;**[**~~and~~**]**

(b) Cabinet for Health and Family Services Form RPS-10 "Disposition of Radioactive Material" 3/2011**; and**

(c) "Annual Low Level Radioactive Waste (LLRW) Report", 3/2011.

(2) This material may be inspected, copied, or obtained, subject to applicable copyright law, at the Office of the Commissioner of Public Health, 275 East Main Street, Frankfort, Kentucky 40621, Monday through Friday, 8 a.m. to 4:30 p.m.902 KAR 100:040 General provisions for specific licenses

WILLIAM D. HACKER, MD FAAP, CPE, Commissioner
JANIE MILLER, Secretary

APPROVED BY AGENCY: July 13, 2011

FILED WITH LRC: July 14, 2011 at noon

CONTACT PERSON: Jill Brown, Office of Legal Services, 275 East Main Street 5 W-B, Frankfort, Kentucky 40601, phone 502-564-7905, fax 502-564-7573.

CABINET FOR HEALTH AND FAMILY SERVICES
Department for Public Health
Division of Public Health Protection and Safety
(As Amended at ARRS, October 11, 2011)

902 KAR 100:042. Decommissioning and financial surety.

RELATES TO: KRS 211.842-211.852, 211.990(4), 10 C.F.R. 20.1401-20.1406, 30**,** Appendices A-E, 30.35, 30.36, 40.36, 70.25, 15 U.S.C.**[**~~Chapter~~**]** 2B, 78m

STATUTORY AUTHORITY: KRS**[**~~13B.170,~~**]** 194A.050, 211.090(3), 211.844

NECESSITY, FUNCTION, AND CONFORMITY: KRS 211.844 requires the [~~The~~] Cabinet for Health and Family Services [~~is mandated by KRS 211.844~~] to regulate the possession or use of sources of ionizing or electronic product radiation and the handling and disposal of radioactive waste. This administrative regulation establishes requirements for decommissioning and financial assurance of radioactive material licensees.

Section 1. General Provisions and Scope. (1) This administrative regulation shall apply to the decommissioning and financial assurance requirements of a facility licensed under 902 KAR 100:040 or [~~902 KAR~~] 100:022, as well as other facilities subject to the cabinet's jurisdiction under KRS 211.842 to 211.852. For a low-level waste disposal facility licensed under 902 KAR 100:022, the criteria for decommissioning shall apply to only an ancillary surface facility that supports radioactive waste disposal activities.

(2) This administrative regulation shall not apply to a site that [~~which~~] has:

(a) Been decommissioned prior to the effective date of this administrative regulation;

(b) Previously submitted and received cabinet approval on a license termination or decommissioning plan prior to the effective date of this administrative regulation; or

(c) Submitted a license termination or decommissioning plan with an application, as required by 902 KAR 100:040, Section 7[~~9~~].

(3) After a site has been decommissioned and the license terminated in accordance with this administrative regulation, the cabinet shall require additional cleanup if, based on new information, it determines that necessary criteria were not met and residual radioactivity at the site may result in significant threat to public health and safety.

(4) To calculate [~~When calculating~~] Total Effective Dose Equivalent (TEDE) to the average member of the critical group, the licensee shall determine the peak annual TEDE dose expected within the first 1,000 [~~1000~~] years after decommissioning.

Section 2. Radiological Criteria for Unrestricted Use. (1) A site shall be considered acceptable for unrestricted use if:

(a) The residual radioactivity that is distinguishable from background radiation results in a TEDE to an average member of the critical group that does not exceed twenty-five (25) millirem (0.25

mSv) per year, including radioactivity from groundwater sources of drinking water; and

(b) The residual radioactivity has been reduced to As Low as Reasonably Achievable (ALARA) levels.

(2) Determination of ALARA levels shall take into account every foreseeable
potential detriment that may result from decontamination and waste disposal.

Section 3. Criteria for License Termination Under Restricted Conditions. The cabinet shall terminate a license under restricted conditions if one (1) or more of the following circumstances exist at the site:

(1) The licensee demonstrates that further reductions in residual radioactivity necessary to comply with Section 2 of this administrative regulation:

(a) May result in net public or environmental harm; or

(b) The residual levels associated with restricted conditions are ALARA. Determination of ALARA levels shall take into account every foreseeable potential detriment that may result from decontamination and waste disposal;[.]

(2) The licensee has made provisions for legally enforceable institutional controls that provide reasonable assurance that the TEDE from residual radioactivity distinguishable from background to the average member of the critical group will not exceed twenty-five (25) mrem (0.25 mSv) per year;[.]

(3) The licensee has provided sufficient financial assurance to enable an independent third party, including a governmental custodian of a site, to assume and carry out responsibilities for necessary control and maintenance of the site. Acceptable financial assurance mechanisms shall include [~~are~~]:

(a) Funds placed into an account segregated from the licensee's assets and outside the licensee's administrative control, as described in Section 15(2)(a) of this administrative regulation;

(b) Surety method, insurance, or other guarantee method[,] as described in Section 15(2)(b) of this administrative regulation;

(c) For a federal, state, or local government licensee, a statement of intent as described in Section 15(2)(d) of this administrative regulation; or

(d) For a governmental entity assuming custody and ownership of a site, an arrangement deemed acceptable by the governmental entity.

(4) The licensee has submitted a decommissioning or license termination plan to the cabinet indicating the licensee's intent to decommission in accordance with Section 14(1) of this administrative regulation[,] and specifying that the licensee intends to decommission by restricting use of the site. The licensee shall document in the plan how the advice of potentially [-]affected individuals and institutions in the community has been sought, analyzed, and incorporated, as appropriate.

(a) A licensee proposing to decommission by restricting use of the site shall seek advice from potentially- affected parties, as follows:

1. If institutional controls proposed by the licensee:

a. Provides reasonable assurance that the TEDE from residual radioactivity distinguishable from background to the average member of the critical group will not exceed twenty-five (25) mrem (0.25 mSv) TEDE per year;

b. Are enforceable; and

c. Will not impose undue burdens on the local community or other affected parties.

2. If the licensee has provided sufficient financial assurance to enable an independent third party, including a governmental custodian of a site, to assume and carry out responsibilities for necessary control and maintenance of the site;

(b) In seeking advice on the issues identified in paragraph (a) of this subsection, the licensee shall provide for:

1. Participation by representatives of a broad cross section of potentially-affected community interests;

2. An opportunity for a comprehensive, collective discussion on the issues by the participants; and

3. A publicly available summary of the results of the discussions, including a description of the participants' viewpoints and the extent of agreement and disagreement among the participants; and

(5) Residual radioactivity at the site has been reduced so that if the institutional controls were no longer in effect, there is reasonable assurance that the TEDE from residual radioactivity distinguishable from background to the average member of the critical group is ALARA[,] and shall not exceed:

(a) 100 mrem (1 mSv) per year; or

(b) 500 mrem (5 mSv) per year, if the licensee:

1. Demonstrates that further reductions in residual radioactivity necessary to comply with the value in subsection (5)(a) of this section are not technically achievable, are prohibitively expensive, or may result in net public or environmental harm;

2. Makes provisions for durable institutional controls;

3. Provides sufficient financial assurance to enable a responsible government entity or independent third party, including a governmental custodian of a site, to:

a. Carry out periodic rechecks of the site at least every five (5) years to assure that the institutional controls remain in place as necessary to meet the criteria established in subsection (2) of this section; and

b. Assume and carry out responsibilities for necessary control and maintenance of the institutional controls. Acceptable financial assurance mechanisms shall be as established [~~are those~~] in subsection (3) of this section.

Section 4. Alternate Criteria for License Termination. (1) The cabinet may terminate a license using alternate criteria greater than the dose criterion established in Sections 2 and 3(2) or (4)(a)1a of this administrative regulation, if the licensee:

(a) Submits an analysis of possible sources of exposure in support of assurance that:

1. Public health and safety continues to be protected; and

2. It is unlikely that the dose from manmade sources combined, other than medical, are more than the 100 mrem/year (1 mSv/y) limit of 902 KAR 100:019, Section 10(1)(a);

(b) Has employed restrictions on site use, to the extent practical, according to the provisions of Section 3 of this administrative regulation;

(c) Reduces doses to ALARA levels, taking into consideration potential detriments expected to result from decontamination and waste disposal; and

(d) Has submitted a decommissioning or license termination plan to the cabinet indicating the licensee's intent to decommission in accordance with Section 14(1) of this administrative regulation, and specifying that the licensee proposes to decommission by use of alternate criteria.

1. The licensee shall document in the plan how the advice of potentially-affected individuals and institutions in the community has been sought, analyzed, and
addressed, as appropriate.

2. In seeking advice, the licensee shall provide for:

a[~~1~~]. Participation by representatives of a broad cross section of potentially-affected community interests;

b[~~2~~]. An opportunity for a comprehensive, collective discussion on the issues by the participants; and

c[~~3~~]. A publicly available summary of the results of discussions, including a description of the participant's viewpoints and the extent of agreement and disagreement among the participants.

(2) The use of alternate criteria to terminate a license requires the approval of the cabinet, after consideration of recommendations that address comments provided by state and federal agencies[,] and public comments submitted pursuant to Section 5 of this administrative regulation.

Section 5. Public Notification and Public Participation. Upon receipt of a license termination or decommissioning plan from the licensee, or a proposal by the licensee for release of a site pursuant to Section 3 or 4 of this administrative regulation, or if the cabinets determines a notice to be in the public interest, the cabinet shall:

(1) Notify and solicit comments from:

(a) Local and state governments in the vicinity of the site; and

(b) Other state and federal agencies, if the licensee proposes to release a site pursuant to Section 4 of this administrative regula-

tion.

(2) Publish a notice to solicit comments from potentially[-]affected parties. Publication shall be in a medium readily accessible to individuals in the vicinity of the site, and may be:

(a) Local newspaper;

(b) Letters to state and local organizations; or

(c) Other appropriate media.

Section 6. Minimization of Contamination. An applicant for a license or for an amendment in its entirety shall:

(1) Describe in the application how facility design and procedures for operation shall minimize contamination of the facility and the environment to the extent practicable;

(2) Facilitate eventual decommissioning; and

(3) Minimize the generation of radioactive waste, to the extent practicable.

Section 7. Criteria Relating to Use of Financial Tests and Parent Company Guarantees for Providing Reasonable Assurance of Funds for Decommissioning. (1) An applicant or licensee shall [~~may~~] provide reasonable assurance of the availability of funds for decommissioning based upon:

(a) Obtaining a parent company to guarantee the availability of funds for decommissioning costs; and

(b) A demonstration that the parent company meets financial requirements.

(2) Financial test.

(a) To pass the financial test, the parent company shall meet one (1) of the following criteria:

1. The parent company shall have:

a. Two (2) of the following three (3) ratios:

(i) A ratio of total liabilities to net worth less than two (2);

(ii) A ratio of the sum of net income plus depreciation, depletion, and amortization to total liabilities greater than one-tenth (0.1); or

(iii) A ratio of current assets to current liabilities greater than one and five-tenths (1.5);

b. Net working capital and tangible net worth each at least six (6) times the current decommissioning cost estimates for the total of facilities or parts of the facilities, or prescribed amount if a certification is used;

c. Tangible net worth of at least $10,000,000; and

d. Assets located in the United States amounting to at least ninety (90) percent of the total assets or at least six (6) times the current decommissioning cost estimates for the total of facilities or parts of the facilities, or prescribed amount if a certification is used; or

2. The parent company shall have:

a. A current rating for its most recent bond issuance of AAA, AA, A, or BBB as issued by Standard and Poor's, or AAA, AA, A, or BAA as issued by Moody's;

b. Tangible net worth each at least six (6) times the current decommissioning cost estimates for the total of facilities or parts of the facilities, or prescribed amount if a certification is used;

c. Tangible net worth of at least $10,000,000; and

d. Assets located in the United States amounting to at least ninety (90) percent of the total assets or at least six (6) times the current decommissioning cost estimates for the total of facilities or parts of the facilities, or prescribed amount if a certification is used; or

(b) The parent company's independent certified public accountant shall compare the data used by the parent company in the financial test, which shall be derived from the independently audited, year-end financial statements for the latest fiscal year, with the amounts in the financial statement. The licensee shall inform the cabinet, within ninety (90) days, of matters coming to the auditor's attention that [~~which~~] cause the auditor to believe that:

1. The data specified in the financial test requires adjustment; and

2. The company no longer passes the test.

(c)1. After the initial financial test, the parent company shall repeat the passage of the test within ninety (90) days after the close of each succeeding fiscal year.

2. a. If the parent company no longer meets the requirements of subsection (2)(a) of this section, the licensee shall notify the cabinet of its intent to establish alternate financial assurance.

b. The notice shall be sent by certified mail within ninety (90) days after the end of the fiscal year for which the year-end financial data show that the parent company no longer meets the financial test requirements.

c. The licensee shall provide alternate financial assurance within 120 days after the end of a fiscal year.

(3) Parent company guarantee. The terms of a parent company guarantee that [~~which~~] an applicant or licensee obtains shall provide that:

(a) The parent company guarantee shall remain in force unless the guarantor notifies the licensee and the cabinet, by certified mail, return receipt requested, of cancellation. Cancellation shall not occur during the 120 days beginning on the date of receipt of the notice of cancellation as evidenced by the return receipts.

(b) If the licensee fails to provide sufficient alternate financial assurance within ninety (90) days after receipt by the licensee and cabinet of a notice of cancellation of the parent company guarantee from the guarantor, the guarantor shall provide an alternative financial assurance in the name of the licensee.

(c) The parent company guarantee and financial test provisions shall remain in effect until the cabinet has terminated the license.

(d) If a trust is established for decommissioning costs, the trustee and trust shall be acceptable to the cabinet. An acceptable trustee shall include an appropriate state or federal government agency or an entity that [~~which~~] has the authority to act as a trustee[,] and whose trust operations are regulated and examined by a federal or state agency.

Section 8. Criteria Relating to Use of Financial Tests and Self-guarantees for Providing Reasonable Assurance of Funds for Decommissioning. (1) An applicant or licensee may provide reasonable assurance of the availability of funds for decommissioning based upon:

(a) Furnishing its own guarantee of funds available for decommissioning costs pursuant to subsection (3) of this section; and

(b) A demonstration that the company passes the financial test established in subsection (2) of this section.

(2) Financial test.

(a) To pass the financial test, a company shall meet the following criteria:

1. Tangible net worth **shall be** at least ten (10) times the total current decommissioning cost estimate for the total of facilities or parts of the facilities[,] or the current amount required if certification is used.

2. Assets located in the United States **shall amount[**~~amounting~~**]** to at least ninety (90) percent of total assets or at least ten (10) times the total current decommissioning cost estimate for the total of facilities or parts of the facilities[,] or the current amount required if certification is used.

3. A current rating for its most recent bond issuance of AAA, AA, or A as issued by Standard and Poor's, or Aaa, Aa, or A as issued by Moody's.

(b) To pass the financial test, a company shall meet the following additional requirements:

1. The company shall have at least one (1) class of equity securities registered pursuant to 15 **U.S.C.[**~~USC Chapter~~**]** 2B.

2. The company's independent certified public accountant shall compare the data used by the company in the financial test, which shall be derived from the independently audited, year-end financial statements for the latest fiscal year, with the amounts in the financial statement. The licensee shall inform the cabinet, within ninety (90) days, of matters coming to the attention of the auditor that cause the auditor to believe that:

a. The data specified in the financial test requires adjustment; and

b. The company no longer passes the test.

3. After the initial financial test, the company shall repeat passage of the test within ninety (90) days after the close of each succeeding fiscal year.

(c) If the licensee no longer meets the requirements of paragraph (a) of this subsection, the licensee shall notify the cabinet immediately of its intent to establish alternate financial assurance

within 120 days of the notice.

(3) Company self-guarantee. The terms of a self-guarantee that [~~which~~] an applicant or licensee furnishes shall provide that:

(a) The guarantee shall remain in force unless the licensee sends notice of cancellation by certified mail, return receipt requested, to the cabinet. Cancellation shall not occur during the 120 days beginning on the date of receipt of the notice of cancellation by the cabinet, as evidenced by the return receipt.

(b) The licensee shall provide alternative financial assurance as specified in 902 KAR Chapter 100 [~~the cabinet's administrative regulations~~] within ninety (90) days following receipt by the cabinet of a notice of cancellation of the guarantee.

(c) The guarantee and financial test provisions shall remain in effect until the cabinet has terminated the license or until another financial assurance method acceptable to the cabinet has been put into effect by the licensee.

(d) The licensee shall promptly forward to the cabinet and the licensee's independent auditor the reports covering the latest fiscal year filed by the licensee with the Securities and Exchange Commission pursuant to the requirements of 15 **U.S.C.[**~~USC~~**]** 78m.

(e) If the licensee's most recent bond issuance ceases to be rated "A" or above by either Standard and Poor's or Moody's, the licensee shall notify to the cabinet, in writing, within twenty (20) days after publication of the change by the rating service. If the licensee's most recent bond issuance ceases to be rated "A" or above by both Standard and Poor's and Moody's, the licensee shall no longer meet the requirements of subsection (2)(a) of this section.

(f) An applicant or licensee shall provide to the cabinet a written commitment by a corporate officer stating that the licensee shall fund and carry out the required decommissioning activities or, upon issuance of an order by the cabinet, the licensee
shall set up and fund a trust in the amount of the current cost estimates for decommissioning.

Section 9. Criteria Relating To Use of Financial Tests and Self-guarantee for Providing Reasonable Assurance of Funds for Decommissioning by Commercial Companies that Have No Outstanding Rated Bonds. (1) An applicant or licensee may provide reasonable assurance of the availability of funds for decommissioning based upon:

(a) Furnishing its own guarantee of the availability of funds for decommissioning costs pursuant to subsection (3) of this section; and

(b) A demonstration that the company passes the financial test established in subsection (2) of this section.

(2) Financial test.

(a) To pass the financial test a company shall meet the following criteria:

1. Tangible net worth greater than $10,000,000, or at least ten (10) times the total current decommissioning cost estimate, or the current amount required if certification is used, whichever is greater, for decommissioning activities for which the company is responsible as self-guaranteeing licensee and as parent-guarantor.

2. Assets located in the United States amounting to at least ninety (90) percent of total assets or at least ten (10) times the total current decommissioning cost estimate, or the current amount required if certification is used for decommissioning activities for which the company is responsible as self-guaranteeing licensee and as parent-guarantor.

3. A ratio of cash flow divided by total liabilities greater than 0.15 and a ratio of total liabilities divided by net worth less than one and five-tenths (1.5).

(b) A company shall also meet the following financial requirements:

1. The company's independent certified public accountant shall compare the data used by the company in the financial test, which shall be derived from the independently audited year-end financial statement[,] based on United States generally accepted accounting practices, for the latest fiscal year[,] with the amounts in the financial statement. The licensee shall inform the cabinet[,] within ninety (90) days[,] of matters that cause the auditor to believe that:

a. The data specified in the financial test requires adjustment; and

b. The company no longer passes the test.

2. After the initial financial test, the company shall repeat passage of the test within ninety (90) days after the close of each succeeding fiscal year.

3.a. If the licensee no longer meets the requirements of paragraph (a) of this subsection, the licensee shall notify the cabinet of intent to establish alternative financial assurance.

b. The notice shall be sent by certified mail, return receipt requested, within ninety (90) days after the end of the fiscal year for which the year-end financial data show that the licensee no longer meets the financial test requirements.

c. The licensee shall provide alternative financial assurance within 120 days after the end of the fiscal year.

(3) Company self-guarantee. The terms of a self-guarantee which an applicant or licensee furnishes shall provide that:

(a) The guarantee shall remain in force unless the licensee sends notice of cancellation by certified mail, return receipt requested, to the cabinet. Cancellation shall not occur until an alternative financial assurance mechanism is in place.

(b) The licensee shall provide alternative financial assurance, as specified in this administrative regulation, within ninety (90) days following receipt by the cabinet of a notice of cancellation of the guarantee.

(c) The guarantee and financial test provisions shall remain in effect until the cabinet has terminated the license or until another financial assurance method acceptable to the cabinet has been put into effect by the licensee.

(d) An applicant or licensee shall provide to the cabinet a written commitment by a corporate officer stating that the licensee shall fund and carry out the required decommissioning activities or, upon issuance of an order by the cabinet, the licensee shall set up and fund a trust in the amount of the current cost estimates for decommissioning.

Section 10. Criteria Relating to Use of Financial Tests and Self-guarantee for Providing Reasonable Assurance of Funds for Decommissioning by Nonprofit Colleges, Universities, and Hospitals. (1) An applicant or licensee may provide reasonable assurance of the availability of funds for decommissioning based upon:

(a) Furnishing its own guarantee of the availability of funds for decommissioning costs; and

(b) A demonstration that the applicant or licensee passes the financial test established in subsection (2) of this section.

(2) Financial test.

(a) A college or university shall meet either of the following criteria:

1. For an applicant or licensee that issues bonds, a current rating for its most recent uninsured, uncollateralized, and unencumbered bond issuance of AAA, AA, or A as issued by Standard and Poor's, or Aaa, Aa, or A as issued by Moody's.

2. For an applicant or licensee that does not issue bonds, unrestricted endowment consisting of assets located in the United States of at least $50,000,000, or at least thirty (30) times the total current decommissioning cost estimate, or the current amount required if certification is used, whichever is greater, for decommissioning activities for which the college or university is responsible as a self-guaranteeing licensee.

(b) A hospital shall meet the following criteria:

1. For an applicant or licensee that issues bonds, a current rating for its most recent uninsured, uncollateralized, and unencumbered bond issuance of AAA, AA, or A as issued by Standard and Poor's, or Aaa, Aa, or A as issued by Moody's; or

2. For an applicant or licensee that does not issue bonds:

a. The result of total revenues minus total expenditures[,] divided by total revenues[,] shall be equal to or greater than 0.04;

b. Long term debt divided by net fixed assets shall be less than or equal to 0.67;

c. The sum of current assets plus depreciation funds, divided by current liabilities, shall be greater than or equal to 2.55; and

d. Operating revenues shall be at least 100 times the total current decommissioning cost estimate, or the current amount required if certification is used, for decommissioning activities for which the hospital is responsible as a self-guaranteeing license.

(c) A licensee shall meet the following requirements:

1. A licensee's independent certified public accountant shall compare the data used by the licensee in the financial test, which shall be derived from the independently audited year-end financial statements, based on United States generally accepted accounting practices, for the latest fiscal year, with the amounts in the financial statement. The licensee shall inform the cabinet, within ninety (90) days, of matters coming to the attention of the auditor that cause the auditor to believe that:

a. The data specified in the financial test requires adjustment; and

b. The licensee no longer passes the test.

2. After the initial financial test, a licensee shall repeat passage of the test within ninety (90) days after the close of each succeeding fiscal year.

3. If a licensee no longer meets the requirements of subsection (1) of this section, the licensee shall notify the cabinet of its intent to establish alternative financial assurance. The notice shall be sent by certified mail, return receipt requested, within ninety (90) days after the end of the fiscal year for which the year-end financial data show that the licensee no longer meets the financial test requirements. The licensee shall provide alternate financial assurance within 120 days after the end of the fiscal year.

(3) Self-guarantee. The terms of a self-guarantee that [~~which~~] an applicant or licensee furnishes shall provide that:

(a) The guarantee shall remain in force unless the licensee sends notice of cancellation by certified mail, return receipt requested, to the cabinet. Cancellation shall not occur unless an alternative financial assurance mechanism is in place.

(b) The licensee shall provide alternative financial assurance, as specified in this administrative regulation, within ninety (90) days following receipt by the cabinet of a notice of cancellation of the guarantee.

(c) The guarantee and financial test provisions shall remain in effect until the cabinet has terminated the license or until another financial assurance method acceptable to the cabinet has been put into effect by the licensee.

(d) An applicant or licensee shall provide to the cabinet a written commitment by a corporate officer or officer of the institution stating that the licensee shall:

1. Fund and carry out the required decommissioning activities; or

2. Upon issuance of an order by the cabinet, set up and fund a trust in the amount of current cost estimates for decommissioning.

(e) If the licensee's most recent bond issuance ceases to be rated "A" or above by either Standard and Poor's or Moody's, the licensee shall notify the cabinet, in writing, within twenty (20) days after publication of the change by the rating service.

Section 11. Financial Assurance and Recordkeeping for Decommissioning for Radioactive Material. (1)(a) An applicant for a specific license authorizing the possession and use of unsealed radioactive material of half-life greater than 120 days and in quantities exceeding 10^5[~~5~~] times the applicable quantities in Section 16 of this administrative regulation shall submit a decommissioning funding plan as described in Section 15(1) of this administrative regulation.

(b) A decommissioning funding plan shall also be submitted if a combination of isotopes is involved, and if R divided by 10^5[~~5~~] is greater than one (1) (known as the "unity rule"), where R is defined as the sum of the ratios of the quantity of an isotope to the applicable value in Section 16 of this administrative regulation.

(c) A holder of, or applicant for, a specific license authorizing the possession and use of sealed sources or plated foils of half-life greater than 120 days and in quantities exceeding 10^{12} times the applicable quantities in Section 16, or if a combination of isotopes is involved if R, divided by 10^{12} is greater than one (1) (known as the "unity rule"), where R is defined as the sum or the ratios of the quantity of an isotope to the applicable value in Section 16 of this administrative regulation, shall submit a decommissioning funding plan as described in Section 15(1) of this administrative regulation.

(2) An applicant for a specific license authorizing possession and use of radioactive material of half-life greater than 120 days and in quantities specified in subsection (4) of this section shall:

(a) Submit a decommissioning funding plan as described in Section 15(1) of this administrative regulation; or

(b) Submit a certification that financial assurance for decommissioning has been provided in the amount prescribed by subsection (4) of this section, using one (1) of the methods described in Section 15 of this administrative regulation. For an applicant, the certification may state that the appropriate assurance shall be obtained after the application has been approved and the license issued, but before the receipt of licensed material. If an applicant defers execution of the financial instrument until after the license has been issued, a signed original of the financial instrument obtained to satisfy the requirements of Section 15 of this administrative regulation shall be submitted to the cabinet before receipt of licensed material. If an applicant does not defer execution of the financial instrument, the applicant shall submit to the cabinet, as part of the certification, a signed original of the financial instrument obtained to satisfy the requirements of Section 15 of this administrative regulation.

(3)(a) A holder of a specific license of a type described in subsection (1) or (2) of this section, shall provide financial assurance for decommissioning in accordance with the criteria established in this section.

(b) A holder of a specific license of a type described in subsection (1) of this section shall submit a decommissioning funding plan as described in Section 15(1) of this administrative regulation or a certification of financial assurance for decommissioning in an amount at least equal to $1,125,000 [~~750,000~~] in accordance with the criteria **established[**~~set forth~~**]** in this section. If a licensee submits a certification of financial assurance rather than a decommissioning funding plan, the licensee shall include a decommissioning funding plan in an application for license renewal.

(c) A holder of a specific license of a type described in subsection (2) of this section shall submit a decommissioning funding plan as described in Section 15 of this administrative regulation, or a certification of financial assurance for decommissioning in accordance with the criteria established in this section.

(d) A waste collector or waste processor, as defined in 902 KAR 100:010, shall provide financial assurance in an amount based on a decommissioning funding plan as described in Section 15 of this administrative regulation. The decommissioning funding plan shall include the cost of disposal of the maximum amount (curies) of radioactive material permitted by the license, and the cost of disposal of the maximum quantity, by volume, of radioactive material that could be present at the licensee's facility at any time, in addition to the cost to remediate the licensee's site to meet the license termination criteria of 902 KAR 100:019. The decommissioning funding plan shall be submitted by **December 3, 2006[**~~June 30, 2010~~**].**

(4) The following is a list [~~table~~] of required amounts of financial assurance for decommissioning, listed by quantity of radioactive material:

(a) Greater than 10^4[4] but less than or equal to 10^5[~~5~~] times the applicable quantities established in Section 16 of this administrative regulation, in unsealed form. For a combination of isotopes, if R, as defined in subsection (1) of this section, divided by 10^4[4] is greater than one (1) but R divided by 10^5[~~5~~] is less than or equal to one (1), the amount shall be $1,125,000 [~~750,000~~].

(b) Greater than 10^3[~~3~~] but less than or equal to 10^4[4] times the applicable quantities established in Section 16 of this administrative regulation, in unsealed form. For a combination of isotopes, if R, as defined in subsection (1) of this section, divided by 10^3[~~3~~] is greater than one (1) but R divided by 10^4[4] is less than or equal to one (1), the amount shall be $225,000 [~~150,000~~].

(c) Greater than 10^{10} but less than or equal to 10^{12} times the applicable quantities established in Section 16 of this administrative regulation, in sealed sources or plated foils. For a combination of isotopes, if R, as defined in subsection (1) of this section, divided by 10^{10}[~~10~~] is greater than one (1), the amount shall be $113,000 [~~75,000~~].

(d)1. A licensee required to submit the $1,125,000 amount shall do so by June 30, 2010.

2. A licensee required to submit the $113,000 or $225,000 amount shall do so by June 30, 2010.

3. A licensee having possession limits exceeding the upper

bounds of this list shall base financial assurance on a decommissioning funding plan.

Section 12. Financial Assurance and Recordkeeping for Decommissioning for Source Material. Criteria for providing financial assurance for decommissioning, except for licenses authorizing the receipt, possession, and use of source material for uranium or thorium milling, or radioactive material at sites formerly associated with such milling, shall be as follows:

(1) An applicant for a specific license authorizing the possession and use of more than 100 millicuries (mCi) of source material in a readily dispersible form shall submit a decommissioning funding plan as described in Section 15(1) of this administrative regulation.

(2) An applicant for a specific license authorizing possession and use of quantities of source material greater than 10 millicuries (mCi) but less than or equal to 100 millicuries (mCi) in a readily dispersible form shall submit:

(a) A decommissioning funding plan as described in Section 15(1) of this administrative regulation; or

(b) A certification that financial assurance for decommissioning has been provided in the amount of $225,000 [~~150,000~~] using one (1) of the methods described in Section 15 of this administrative regulation.

1. The certification may state that the appropriate assurance shall be obtained after the application has been approved and the license issued, but before the receipt of licensed material.

2. If an applicant defers execution of the financial instrument until after the license has been issued, a signed original of the financial instrument obtained to satisfy the requirements of Section 15 of this administrative regulation shall be submitted to the cabinet prior to receipt of licensed material.

3. If an applicant does not defer execution of the financial instrument, the applicant shall submit to the cabinet, as part of the certification, a signed original of the financial instrument obtained to satisfy the requirements of Section 15 of this administrative regulation.

(c)1. A holder of a specific license [~~which is~~] covered by subsection (1) of this section or by this subsection, shall provide financial assurance for decommissioning in accordance with the criteria established in this section.

2. A holder of a specific license of a type described in subsection (1) of this section shall submit a decommissioning funding plan as described in Section 15(1) of this administrative regulation, or a certification of financial assurance for decommissioning in an amount at least equal to $1,125,000 [~~750,000~~], in accordance with the criteria in this section. If the licensee submits the certification of financial assurance rather than a decommissioning funding plan, the licensee shall include a decommissioning funding plan in an application for license renewal.

3. A holder of a specific license of a type described in this subsection shall submit a decommissioning funding plan, as described in Section 15(1) of this administrative regulation, or a certification of financial assurance for decommissioning in accordance with the criteria established in this section.

Section 13. Financial Assurance and Recordkeeping for Decommissioning for Special Nuclear Material. (1)(a) An applicant for a specific license of the type authorizing the possession and use of unsealed nuclear material in quantities exceeding 10^5[~~5~~] times the applicable quantity established in Section 16 of this administrative regulation shall submit a decommissioning funding plan as described in Section 15(1) of this administrative regulation.

(b) A decommissioning funding plan shall be submitted if [~~when~~] a combination of isotopes is involved, and if R divided by 10^5[~~5~~] is greater than one (1) (known as the "unity rule"), where R is the sum of the ratios of the quantity of each isotope to the applicable value in Section 16 of this administrative regulation.

(2) An applicant for a specific license authorizing possession and use of unsealed special nuclear material in quantities specified in subsection (4) of this section, shall submit:

(a) A decommissioning funding plan as described in Section 15(1) of this administrative regulation; or

(b) A certification that financial assurance for decommissioning has been provided in an amount established in subsection (4) of this section, using one (1) of the methods described in Section 15 of this administrative regulation.

1. The certification may state that the appropriate assurance shall be obtained after the application has been approved and the license issued, but before the receipt of licensed material.

2. If an applicant defers execution of the financial instrument until after the license has been issued, a signed original of the financial instrument obtained to satisfy the requirements of Section 15 of this administrative regulation shall be submitted to the cabinet before receipt of licensed material.

3. If an applicant does not defer execution of the financial instrument, the applicant shall submit to the cabinet, as part of the certification, a signed original of the financial instrument obtained to satisfy the requirements of Section 15 of this administrative regulation.

(3)(a) A holder of a specific license that [~~which~~] is of a type described in subsection (1) of this section, shall provide financial assurance for decommissioning in accordance with the criteria established in this section.

(b) A holder of a specific license of a type described in subsection (1) of this section shall submit a decommissioning funding plan as described in Section 15(1) of this administrative regulation, or a certification of financial assurance for decommissioning in an amount at least equal to $1,125,000 [~~750,000~~], in accordance with the criteria established in this section. If the licensee submits the certification of financial assurance rather than a decommissioning funding plan, the licensee shall include a decommissioning funding plan in an application for license renewal.

(c) Each holder of a specific license of a type described in subsection (1) of this section shall submit:

1. A decommissioning funding plan, described in Section 15(1) of this administrative regulation; or

2. A certification of financial assurance for decommissioning, in accordance with the criteria established in this section.

(4) The following is a table of required amounts of financial assurance for decommissioning, listed by quantity of material:

(a) Greater than 10^4 but less than or equal to 10^5 times the applicable quantities established in Section 16 of this administrative regulation. For a combination of isotopes, if R, as defined in subsection (1) of this section, divided by 10^4 is greater than one (1) but R divided by 10^5 is less than or equal to one (1), the amount shall be
$1,125,000 [~~750,000~~].

(b) Greater than 10^3 but less than or equal to 10^4 times the applicable quantities established in Section 16 of this administrative regulation. For a combination of isotopes, if R, as defined in subsection (1) of this section, divided by 10^3 is greater than one (1) but R divided by 10^4 is less than or equal to one (1), the amount shall be $225,000 [~~150,000~~].

(c) A licensee having possession limits exceeding the upper bounds of this section shall base financial assurance on a decommissioning funding plan.

Section 14. Expiration and Termination of Licenses and Decommissioning of Sites and Separate Buildings or Outdoor Areas. (1) Within sixty (60) days of the occurrence one (1) of the following events, a licensee shall notify the cabinet[,] in writing[,] and shall either begin decommissioning its site, separate building, or outdoor area containing residual radioactivity, so that the building or outdoor area is suitable for release in accordance with cabinet requirements **established in this administrative regulation**, or shall submit[,] within twelve (12) months of notification[,] a decommissioning plan, if required by subsection (4)(a) of this section, and shall begin decommissioning upon approval of that plan if:

(a) The license has expired pursuant to 902 KAR 100:040, Section 7;

(b) The licensee has decided to permanently cease principal activities, as established in this section, at the entire site, in a separate building or outdoor area that contains residual radioactivity, so that the building or outdoor area is unsuitable for release in accordance with cabinet requirements **established in this administrative regulation**;

(c) Principal activities under the license have not been con-

ducted for a period of twenty-four (24) months; or

(d) Principal activities have not been conducted[,] for a period of twenty-four (24) months[,] in a separate building or outdoor area that contains residual radioactivity, so that the building or outdoor area is unsuitable for release in accordance with cabinet requirements.

(2) Coincident with the notification required by subsection (1) of this section, the licensee shall maintain in effect all decommissioning financial assurances established by the licensee pursuant to Sections 11, 12, and 13 of this administrative regulation[,] in conjunction with a license issuance or renewal[,] or as required by this section. The amount of the financial assurance shall be increased or decreased, as appropriate, to cover the detailed cost estimate for decommissioning established pursuant to subsection (4)(d)5 of this section.

(a) A licensee who has not provided financial assurance to cover the detailed cost estimate submitted with the decommissioning plan shall do so within one year (1) after the effective date of this administrative regulation.

(b) Following approval of the decommissioning plan, and with cabinet approval, a licensee may reduce the amount of the financial assurance as decommissioning proceeds and radiological contamination is reduced at the site.

(3)(a) The cabinet may grant a request to extend the time periods established in this section[,] if the cabinet determines that an extension is not detrimental to public health or safety[,] and is in the public interest.

(b) The request shall be submitted at least thirty (30) days before the notification required by subsection (1) of this section.

(c) The schedule for decommissioning established in subsection (1) of this section shall [~~may~~] not commence until the cabinet has made a determination on the request.

(4)(a) A decommissioning plan shall be submitted if required by a license condition or if the procedures and activities necessary to carry out decommissioning of the site, a separate building, or outdoor area have not been approved by the cabinet previously, and the decommissioning procedures may increase potential risk to the health or safety of workers or to the public, as in the following cases:

1. Procedures involving techniques not applied routinely during cleanup or maintenance operations;

2. Workers entering areas not normally occupied where surface contamination and radiation levels are significantly higher than routinely encountered during operation;

3. Procedures potentially resulting in significantly greater airborne concentrations of radioactive materials than are present during operation; or

4. Procedures potentially resulting in significantly greater releases of radioactive material to the environment than those associated with operation.

(b) The cabinet may approve an alternate schedule for submittal of a decommissioning plan required pursuant to subsection (1) of this section[,] if the cabinet determines that the alternative schedule is necessary to the effective conduct of decommissioning operations and presents no undue risk from radiation to public health or safety, and is in the public interest.

(c) A procedure with a potential health or safety impact, including a procedure listed in paragraph (a) of this subsection, shall [~~may~~] not be carried out prior to approval of the decommissioning plan.

(d) A proposed decommissioning plan for a site, separate building, or outdoor area shall include:

1. A description of the conditions of the site, separate building, or outdoor area sufficient to evaluate the acceptability of the plan;

2. A description of planned decommissioning activities;

3. A description of methods used to ensure protection of workers and the environment against radiation hazards during decommissioning;

4. A description of the planned final radiation survey;

5. An updated detailed cost estimate for decommissioning, comparison of that estimate with present funds set aside for decommissioning, and a plan for assuring the availability of adequate funds for completion of decommissioning; and

6. For decommissioning plans calling for completion of decommissioning later than twenty-four (24) months after plan approval, a justification for the delay based on the criteria in subsection (6) of this section.

(e) The proposed decommissioning plan shall be approved by the cabinet if the information**[**~~therein~~**]** demonstrates completion as soon as practicable[,] and adequate protection for the health and safety of workers and the public.

(5)(a) A licensee shall complete decommissioning of the site, separate building, or outdoor area as soon as practicable, but within twenty-four (24) months following the initiation of decommissioning, except as provided in subsection (6) of this section.

(b) If decommissioning involves the entire site, the licensee shall request license termination as soon as practicable, but within twenty-four (24) months following the initiation of decommissioning, except as provided in subsection (6) of this section.

(6) The cabinet shall [~~may~~] approve a request for an alternative schedule for completion of decommissioning of the site, separate building, or outdoor area, and license termination if appropriate, if the cabinet determines that the alternative is warranted by consideration of the following:

(a) If it is technically feasible to complete decommissioning within the allotted twenty-four (24) month period;

(b) If sufficient waste disposal capacity is available to allow completion of decommissioning within the allotted twenty-four (24) month period;

(c) If a significant volume reduction in wastes requiring disposal can be achieved by allowing short-lived radionuclides to decay;

(d) If a significant reduction in radiation exposure to workers can be achieved by allowing short-lived radionuclides to decay; and

(e) Other site-specific factors, such as the regulatory requirements of other government agencies, lawsuits, groundwater treatment activities, monitored natural groundwater restoration, actions that may result in more environmental harm than deferred cleanup, and other factors beyond the control of the licensee.

(7) As the final step in decommissioning, the licensee shall:

(a) Certify the disposition of all licensed material, including accumulated wastes,
by submitting a completed cabinet [~~"~~]Form RPS-10[~~"~~], incorporated by reference in 902 KAR 100:040, or equivalent information; and

(b) Conduct a radiation survey of the premises where the licensed activities were carried out and submit a report of the results of this survey, unless the licensee demonstrates in some other manner that the premises are suitable for release in accordance with the criteria for decommissioning established in Sections 1 through 6 of this administrative regulation. The licensee shall, as appropriate:

1. Report levels:

a. Of gamma radiation in units of microroentgen (**μR**[~~mR~~]) (millisieverts, mSv) per hour at one (1) meter from surfaces;

b. Of radioactivity, including alpha and beta, in units of disintegrations per minute, microcuries (megabecquerels) per 100 square centimeters removable and fixed radiation for surfaces;

c. Microcuries (megabecquerels) per milliliter for water; and

d. Picocuries (Becquerels) per gram for solids such as soils or concrete; and

2. Specify the survey instruments used and certify that each instrument is properly calibrated and tested.

(8) Specific licenses, including expired licenses, shall be terminated by written notice to the licensee if the cabinet determines that:

(a) Radioactive material has been properly disposed of;

(b) Reasonable effort has been made to eliminate residual radioactive contamination, if present; and

(c) A radiation survey has been performed that [~~which~~] demonstrates that the premises are suitable for release in accordance with the criteria for decommissioning established in Sections 1 through 6 of this administrative regulation; [~~or~~]

(d) Other information submitted by the licensee is sufficient to demonstrate that the premises are suitable for release in accordance with the criteria for decommissioning established in Sections 1 through 6 of this administrative regulation; or

(e) Records required by 902 KAR 100:040, Section 7(3)(e), and Section 15(3) [~~(7)~~] of this administrative regulation have been

received.

Section 15. Financial Assurance Methods. (1) A decommissioning funding plan shall contain a cost estimate for decommissioning and a description of the method of assuring funds for decommissioning from subsection (2) of this section, including means for adjusting cost estimates and associated funding levels periodically over the life of the facility. Cost estimates shall be adjusted at intervals not to exceed three (3) years. The decommissioning funding plan shall also contain:

(a) A certification by the licensee that financial assurance for decommissioning has been provided in the amount of the cost estimate for decommissioning; and

(b) A signed original of the financial instrument obtained to satisfy the requirements of subsection (2) of this section.

(2) Financial assurance for decommissioning shall be provided by one (1) or more of the following methods:

(a) A prepayment deposited prior to the start of operation into an account segregated from licensee assets and outside the licensee's administrative control of cash or liquid assets so that the amount of funds may be sufficient to pay decommissioning costs. Prepayment shall [~~may~~] be in the form of a trust, escrow account, government fund, certificate of deposit, or deposit of government securities.

(b) A surety method, insurance, or other guarantee method.

1. These methods guarantee that decommissioning costs shall be paid.

2. A surety method shall [~~may~~] be in the form of a surety bond, letter of credit, or line of credit.

3. A parent company guarantee of funds for decommissioning costs based on a financial test may be used if the guarantee and test are as contained in Section 7 of this administrative regulation.

4. A parent company guarantee shall [~~may~~] not be used in combination with another financial method to satisfy the requirements of this section.

5. For commercial corporations that issue bonds, a guarantee of funds by the applicant or licensee for decommissioning costs based on a financial test may be used. If used, the guarantee and test shall be [~~if the guarantee and test are~~] in accordance with Section 8 of this administrative regulation.

6. For commercial companies that do not issue bonds, a guarantee of funds by the applicant or licensee for decommissioning costs may be used if the guarantee and test are in accordance with Section 9 of this administrative regulation.

7. For nonprofit entities, such as colleges, universities, and nonprofit hospitals, a guarantee of funds by the applicant or licensee may be used if the guarantee and test are in accordance with Section 10 of this administrative regulation.

8. A guarantee by the applicant or licensee shall not be used in combination with another financial method used to satisfy the requirements of this section, or in a situation in which [~~where~~] the applicant or licensee has a parent company holding majority control of the voting stock of the company.

9. A surety method, or insurance used to provide financial assurance for decommissioning, shall contain the following conditions:

a. The surety method or insurance shall be open-ended or, if written for a specified term, shall be renewed automatically unless the issuer notifies the cabinet, the beneficiary, and the licensee[~~,~~] at least ninety (90) days prior to the renewal date[~~,~~] of its intention not to renew. The surety method or insurance shall provide that the full face amount be paid to the beneficiary automatically, prior to expiration, without proof of forfeiture, if the licensee fails to provide a replacement acceptable to the cabinet within thirty (30) days after receipt of notification of cancellation.

b. The surety method or insurance shall be payable to a trust established for decommissioning costs. The trustee and trust shall be acceptable to the cabinet. An acceptable trustee shall include an appropriate state or federal government agency or an entity that has the authority to act as a trustee, and whose trust operations are regulated and examined by a federal or state agency.

c. The surety method or insurance shall remain in effect until the cabinet has terminated the license.

(c) An external sinking fund in which deposits are made at least annually, coupled with a surety method or insurance, the value of which may decrease by the amount being accumulated in the sinking fund.

1. An external sinking fund shall be a fund established and maintained by setting aside funds periodically in an account segregated from licensee assets and outside the licensee's administrative control, in which the total amount of funds may be sufficient to pay decommissioning costs at the time termination of operation is expected.

2. An external sinking fund shall [~~may~~] be in the form of a trust, escrow account, government fund, certificate of deposit, or deposit of government securities.

3. The surety or insurance provisions shall be as stated in subsection (2)(b) of this section.

(d) For a federal, state, or local government licensee, a statement of intent containing a cost estimate for decommissioning[~~,~~] or an amount based on the tables in Sections 11, 12, and 13 of this administrative regulation[~~,~~] and indicating that funds for decommissioning shall be obtained as [~~when~~] necessary.

(e) If a governmental entity is assuming custody and ownership of a site, an arrangement that is deemed acceptable by the governmental entity.

(3)(a) Each person licensed under 902 KAR 100:040 shall keep records of information pertinent to the decommissioning of a facility in an identified location until the site is released for unrestricted use.

(b) Before licensed activities shall be [~~are~~] transferred or assigned in accordance with 902 KAR 100:040, Section 6, a licensee shall transfer the records described in this subsection to the new licensee.

(c) The new licensee shall be responsible for maintaining these records until the license is terminated.

(d) If records pertinent to the decommissioning of a facility are kept for other purposes, reference to the records and their locations shall [~~may~~] be used.

(e) Information the cabinet considers pertinent to decommissioning shall consist of:

1.[~~(a)~~] Records of spills or other unusual occurrences involving the spread of contamination in and around the facility, equipment, or site.

a. The records may be limited to instances in which [~~when~~] contamination remains after a cleanup procedure or if [~~when~~] there is reasonable likelihood that contaminants may have spread to inaccessible areas as in the case of possible seepage into porous materials such as concrete.

b. The records shall include all known information on identification of involved nuclides, quantities, forms, and concentrations.

2.[~~(b)~~] As-built drawings and modifications of structures and equipment in restricted areas where radioactive materials are used, or stored, and of locations of possible inaccessible contamination, such as buried pipes, which may be subject to contamination.

a. If required drawings are referenced, each relevant document need not be indexed individually.

b. If drawings are not available, the licensee shall substitute appropriate records of available information concerning these areas and locations.

3.[~~(c)~~] A list contained in a single document and updated every two (2) years, except for areas containing only sealed sources, provided the sources have not leaked or no contamination remains after a leak, or radioactive materials having half-lives of less than sixty-five (65) days, or depleted uranium used only for shielding or as penetrators in unused munitions:

a.[~~1.~~] Areas designated and formerly designated restricted areas as defined in 902 KAR 100:010, Section 1. For requirements prior to January 26, 1994, see 902 KAR 100:010, Section 1 contained in the 1990 edition of 902 KAR Chapter 100;

b.[~~2.~~] Areas outside of restricted areas that require documentation under subsection (3) of this section; [~~;~~]

c.[~~3.~~] Areas outside of restricted areas where current and previous wastes have been buried as documented under 902 KAR 100:021, Section 11; and

d.[~~4.~~] Areas outside of restricted areas that contain material so that, if the license expired, the licensee shall be required to either

decontaminate the area to meet the criteria for decommissioning in this administrative regulation[,] or to apply for approval for disposal under 902 KAR 100:021, Section 2.

4. [(d)] Records of the cost estimate performed for the decommissioning funding plan or of the amount certified for decommissioning, and records of the funding method used for assuring funds if either a funding plan or certification is used.

Section 16. Quantities1 of Licensed Material.

Materials	Microcuries
Americium-241	.01
Antimony-122	100
Antimony-124	10
Antimony-125	10
Arsenic-73	100
Arsenic-74	10
Arsenic-76	10
Arsenic-77	100
Barium-131	10
Barium-133	10
Barium-140	10
Bismuth-210	1
Bromine-82	10
Cadmium-109	10
Cadmium-115m	10
Cadmium-115	100
Calcium-45	10
Calcium-47	10
Carbon-14	100
Cerium-141	100
Cerium-143	100
Cerium-144	1
Cesium-131	1,000
Cesium-134m	100
Cesium-134	1
Cesium-135	10
Cesium-136	10
Cesium-137	10
Chlorine-36	10
Chlorine-38	10
Chromium-51	1,000
Cobalt-58m	10
Cobalt-58	10
Cobalt-60	1
Copper-64	100
Dysprosium-165	10
Dysprosium-166	100
Erbium-169	100
Erbium-171	100
Europium-152 9.2h	100
Europium-152 13 yr	1
Europium-154	1
Europium-155	10
Fluorine-18	1,000
Gadolinium-153	10
Gadolinium-159	100
Gallium-72	10
Germanium-71	100
Gold-198	100
Gold-199	100
Hafnium-181	10
Holmium-166	100
Hydrogen-3	1,000
Indium-113m	100
Indium-114m	10
Indium-115m	100
Indium-115	10
Iodine-125	1
Iodine-126	1
Iodine-129	0.1
Iodine-131	1
Iodine-132	10
Iodine-133	1
Iodine-134	10
Iodine-135	10
Iridium-192	10
Iridium-194	100
Iron-55	100
Iron-59	10
Krypton-85	100
Krypton-87	10
Lanthanum-140	10
Lutetium-177	100
Manganese-52	10
Manganese-54	10
Manganese-56	10
Mercury-197m	100
Mercury-197	100
Mercury-203	10
Molbdenum-99	100
Neodymium-147	100
Neodymium-149	100
Nickel-59	100
Nickel-63	10
Nickel-65	100
Niobium-93m	10
Niobium-95	10
Niobium-97	10
Osmium-185	10
Osmium-191m	100
Osmium-191	100
Osmium-193	100
Palladium-103	100
Palladium-109	100
Phosphorus-32	10
Platinum-191	100
Platinum-193m	100
Platinum-193	100
Platinum-197m	100
Platinum-197	100
Plutonium-239	.01
Polonium-210	0.1
Potassium-42	10
Praseodymium-142	100
Praseodymium-143	100
Promethium-147	10
Promethium-149	10
Radium-226	.01
Rhenium-186	100
Rhenium-188	100
Rhodium-103m	100
Rhodium-105	100
Rubidium-86	10
Rubidium-87	10
Ruthenium-97	100
Ruthenium-103	10
Ruthenium-105	10
Ruthenium-106	1
Samarium-151	10
Samarium-153	100
Scandium-46	10
Scandium-47	100
Scandium-48	10

Seleium-75	10
Silicon-31	100
Silver-105	10
Silver-110m	1
Silver-111	100
Sodium-24	10
Strontium-85	10
Strontium-89	1
Strontium-90	0.12
Strontium-91	10
Strontium-92	10
Sulphur-35	100
Tantalum-182	10
Technetium-96	10
Technetium-97m	100
Technetium-97	100
Technetium-99m	100
Technetium-99	10
Tellurium-125m	10
Tellurium127m	10
Tellurium-127	100
Tellurium-129m	10
Tellurium-129	100
Tellurium-131m	10
Tellurium-132	10
Terbium-160	10
Thallium-200	100
Thallium-201	100
Thallium-202	100
Thallium-204	10
Thorium (natural)1	100
Thulium-170	10
Thulium-171	10
Tin-113	10
Tin-125	10
Tungsten-181	10
Tungsten-185	10
Tungsten-187	100
Uranium (natural)2	100
Uranium-233	.01
Uranium-234 -- Uranium-235	.01
Vandium-48	10
Xenon-131m	1,000
Xenon-133	100
Xenon-135	100
Ytterbium-175	100
Yttrium-90	10
Yttrium-91	10
Yttrium-92	100
Yttrium-93	100
Zinc-65	10
Zinc-69m	100
Zinc-69	1,000
Zirconium-93	10
Zirconium-95	10
Zirconium-97	10
An alpha emitting radionuclide not listed above or mixtures of alpha emitters of unknown composition	.01
A radionuclide other than an alpha emitting radionuclides, not listed above, or mixtures of beta emitters of unknown composition	.1

[1]Based on alpha disintegration rate of Th-232, Th-230 and their daughter products.

[2]Based on alpha disintegration rate of U-238, U-234, and U-235.

Note: For purposes of 902 KAR 100:021, Section 3, **if[**~~where~~**]** there is involved a combination of isotopes in known amounts, the limit for the combination shall be derived as follows: Determine, for each isotope in the combination, the ratio between the quantity present in the combination and the limit otherwise established for the specific isotope if [~~when~~] not in combination. The sum of such ratios for all the isotopes in the combination shall [~~may~~] not exceed one ("1") (**[**~~i.e.,~~**]**"unity").

WILLIAM D. HACKER, MD FAAP, CPE, Commissioner
JANIE MILLER, Secretary

APPROVED BY AGENCY: July 13, 2011

FILED WITH LRC: July 14, 2011 at noon

CONTACT PERSON: Jill Brown, Office of Legal Services, 275 East Main Street 5 W-B, Frankfort, Kentucky 40601, phone 502-564-7905, fax 502-564-7573.

CABINET FOR HEALTH AND FAMILY SERVICES
Department for Public Health
Division of Public Health Protection and Safety
(As Amended at ARRS, October 11, 2011)

902 KAR 100:100. Industrial radiography.

RELATES TO: KRS 211.842-211.852, 211.990(4), 10 C.F.R. 34, 71, 21 C.F.R. 1020.40

STATUTORY AUTHORITY: KRS**[**~~13B.170,~~**]** 194A.050(1), 211.090(3), 211.844

NECESSITY, FUNCTION, AND CONFORMITY: KRS 211.844 requires the Cabinet for Health and Family Services to provide by administrative regulation for the registration and licensing of the possession or use of sources of ionizing or electronic product radiation and the handling and disposal of radioactive waste. This administrative regulation **establishes[**~~provides~~**]** radiation safety requirements for industrial radiographic operations and shall apply to licensees or registrants who use sources of radiation for industrial radiography.

Section 1. Specific License and Registration Requirements for Industrial Radiography. (1) An **Application for Radioactive Material License, incorporated by reference in 902 KAR 100:040,[**~~application~~**]** for a specific license or registration for the use of sources of radiation in industrial radiography shall be approved if the applicant meets the following requirements:

(a) **Except as provided in subsection 3(k) of this section,** the applicant shall satisfy the general requirements specified in 902 KAR
100:040, Section 4, or [~~902 KAR~~] 100:110 and [~~902 KAR~~] 100:145, and any specific [~~special~~] requirements contained in this administrative regulation.

(b) The applicant shall submit an adequate program for training a radiographer and a radiographers' assistant that meets the requirements of Section 14 of this administrative regulation.

1. After June 30, 2002, an applicant shall not describe the initial training and examination program for a radiographer in the subjects outlined in Section 14 of this administrative regulation.

2. From June 30, 2000, to June 30, 2002, an applicant shall [~~may~~] affirm that an individual acting as an industrial radiographer shall be certified in radiation safety by a certifying entity[,] as described in 10 C.F.R. [~~C.F.R.~~] Part 34, Appendix A, before commencing duty as a radiographer. This affirmation shall substitute for a description of the initial training and examination program for a radiographer in the subjects outlined in Section 14 of this administrative regulation.

(c) The applicant shall submit procedures for verifying and documenting the certification status of a radiographer and for ensuring that the certification of an individual acting as a radiographer remains valid.

(d) The applicant shall submit written operating and emergency procedures as described in Section 15 of this administrative regulation.

(e) The applicant shall submit a description of a program for

inspections of the job performance of a radiographer and a radiographers' assistant at intervals not to exceed six (6) months as described in Section 14 of this administrative regulation.

(f) The applicant shall submit a description of the applicant's overall organization structure as it applies to the radiation safety responsibilities in industrial radiography, including specified delegation of authority and responsibility.

(g) The applicant shall identify and list the qualifications of the individual designated as the radiation safety officer (RSO) and of the potential designees responsible for ensuring that the licensee's radiation safety program is implemented in accordance with approved procedures.

(h) If an applicant intends to perform leak testing of sealed sources or exposure devices containing depleted uranium (DU) shielding, the applicant shall describe the procedures for performing and the qualifications of the person authorized to do the leak testing.

(i) If the applicant intends to analyze the applicant's [~~its~~] own wipe samples, the application shall include a description of the procedures to be followed, which [~~. The description~~] shall include:

1. Instruments to be used;

2. Methods of performing the analysis; and

3. Pertinent experience of the person analyzing the wipe samples.

(j) [~~(i)~~] If the applicant intends to perform an "in-house" calibration of a survey instrument, the applicant shall describe the method [~~methods~~] to be used and the relevant experience of the person performing the calibration. A calibration shall be performed according to the procedures and at the intervals prescribed in Section 5 of this administrative regulation.

(k) [~~(j)~~] The applicant shall identify and describe the location of each field station and permanent radiographic installation.

(l) [~~(k)~~] The applicant shall identify the location where records required by this and other administrative regulations in 902 KAR Chapter 100 shall be maintained.

(2) A licensee shall maintain a copy of its license, documents incorporated by reference, and amendments to these items until superseded by new documents approved by the cabinet[~~,~~] or until the cabinet terminates the license.

Section 2. Performance Provisions for Radiography Equipment. Equipment used in industrial radiographic operations shall meet the following criteria:

(1)(a) **Except as provided in subsection (3)(k) of this section,[~~,~~]** a radiographic exposure device, source assembly, or sealed source[~~,~~] and associated equipment shall meet the provisions specified in American National Standard Institute (ANSI) N432-1980, ["~~"~~]Radiological Safety for the Design and Construction of Apparatus for Gamma Radiography["~~, published as "NBS Handbook 136", issued January 1981~~]; and [~~,~~]

(b) Engineering analysis shall be submitted by an applicant or licensee to demonstrate the applicability of previously performed testing on similar individual radiography equipment components. If upon review, the cabinet determines that the engineering analysis demonstrates that actual testing of the component is not necessary, the engineering analysis shall be an acceptable alternative.

(2)(a) A radiographic exposure device shall have attached to it by the user, a durable, legible, clearly visible label bearing the:

1. Chemical symbol and mass number of the radionuclide in the device;

2. Activity and date on which this activity was last measured;

3. Model[~~,~~] or product code[~~,~~] and serial number of the sealed source;

4. Manufacturer of the sealed source; and

5. Name, address, and telephone number of the licensee or registrant.

(b) A radiographic exposure device intended for use as a Type B transport container shall meet the applicable provisions of 10 C.F.R. [~~C.F.R.~~] 71.

(c) Modification of an exposure device, source changer, source assembly, or associated equipment shall be prohibited, unless the design of a replacement component, including source holder, source assembly, control, or guide tube, shall not compromise the design safety features of the system.

(3) In addition to the provisions specified in subsections (1) and (2) of this section, the following provisions shall apply to a radiographic exposure device, source assembly, and associated equipment that allow the source to be moved out of the device for radiographic operation or to a source changer:

(a) The coupling between the source assembly and the control cable shall be designed in a manner **so** that the source assembly cannot:

1. Become disconnected if cranked outside the guide tube; and

2. Be unintentionally disconnected under normal and reasonably foreseeable abnormal conditions.

(b) The device shall automatically secure the source assembly if it is cranked back into the fully shielded position within the device. The securing system shall be released only by a deliberate operation on the exposure device.

(c) Each outlet fitting, lock box, and drive cable fitting on a radiographic exposure device shall be equipped with a safety plug or cover, which shall be installed during storage and transportation to protect the source assembly from water, mud, sand, or other foreign matter.

(d) A sealed source or source assembly shall have attached to it or engraved on it, a durable, legible, visible label with the words: "DANGER-RADIOACTIVE."[~~.~~] The label shall not interfere with the safe operation of the exposure device or associated equipment.

(e) The guide tube shall have passed:

1. A crushing test that closely approximates the crushing forces likely to be encountered during use; and

2. A kinking resistance test that closely approximates the kinking forces likely to be encountered during use.

(f) Guide tubes shall be used if moving the source out of the device.

(g) An exposure head or similar device designed to prevent the source assembly from passing out the end of the guide tube shall be attached to the outermost end of the guide tube during a radiographic operation.

(h) The guide tube exposure head connection shall withstand the tensile test for control units specified in ANSI N432-1980.

(i) A source changer shall provide a system for assuring that the source cannot be accidentally withdrawn from the changer if connecting or disconnecting the drive cable to or from a source assembly.

(j) A radiographic exposure device and associated equipment in use after January 10, 1996, shall comply with the provisions of this section.

(k)**[**~~Notwithstanding subsection (1)(a) of this section,~~**]** Equipment used in industrial radiography operations need not comply with paragraph 8.9.2(c) of the Endurance Test in American National Standards Institute N432-1980, if the prototype equipment has been tested using a torque value representative of the torque that an individual using the radiographic equipment can realistically exert on the lever or crankshaft of the drive mechanism.

Section 3. Limits on External Levels of Radiation for Radiographic Exposure Devices and Storage Containers. The maximum exposure rate limits for storage containers and source changers shall be:

(1) 200 millirems (2 millisieverts) per hour at any exterior surface; and

(2) Ten (10) millirems (0.1 millisieverts) per hour at one (1) meter from any exterior surface, with the sealed source in the shielded position.

Section 4. Locking of Radiographic Exposure Devices, Storage Containers, and Source Containers. (1) A radiographic exposure device shall have a lock or outer locked container designed to prevent unauthorized or accidental production of radiation or removal or exposure of a sealed source from its shielded position.

(a) An exposure device or its container shall be kept locked, and if a keyed lock, with the key removed at all times except:

1. If under the direct surveillance of a radiographer or radiographer's assistant; or

2. As authorized by Section 19 of this administrative regulation.

(b) During radiographic operation the sealed source assembly shall be secured in the shielded position each time the source is

returned to that position.

(c) A sealed source storage container and source changer shall be:

1. Provided with a lock or outer locked container designed to prevent unauthorized or accidental removal of the sealed source from its shielded position; and

2. Kept locked, and if a keyed lock, with the key removed at all times[,] if containing sealed sources, except if under the direct surveillance of a radiographer or radiographer's assistant.

(2) The control panel of a radiation machine shall be:

(a) Equipped with a lock that prevents the unauthorized use of an x-ray system or the accidental production of radiation; and

(b) Kept locked and the key removed at all times, except if under the direct visual surveillance of a radiographer or radiographer's assistant.

Section 5. Radiation Survey Instruments. (1) A licensee or registrant shall maintain sufficient calibrated and operable radiation survey instruments at a location where a source of radiation is present[,] in order to perform radiation surveys as required by this administrative regulation and 902 KAR 100:019, Section 12(1).

(2) A radiation survey instrument shall be calibrated:

(a) At intervals not to exceed six (6) months;

(b) After an instrument servicing, except for battery changes;

(c)1. At two (2) points located approximately one-third (1/3) and two-thirds (2/3) of full-scale for linear scale instruments;

2. Midrange of each decade, and at two (2) points of at least one (1) decade for logarithmic scale instruments;

3. At three (3) points between two (2) and 1,000 [~~1000~~] millirems (90.02 and ten (10) millisieverts) per hour for digital instruments; and

(d) So that an accuracy within plus or minus twenty (20) percent of the calibration source can be demonstrated at the points checked.

(3) A record of each calibration shall be maintained for three (3) years after the calibration date for inspection by the cabinet.

(4) Instrumentation required by this section shall have a range so that two (2) millirems (0.02 millisieverts) per hour through one (1) rem (0.01 sievert) per hour may be measured.

Section 6. Leak Testing and Replacement of Sealed Sources. (1) The replacement of a sealed source fastened to or contained in a radiographic exposure device, and leak testing, repairing, opening, or modification of a sealed source shall be performed by a person specifically authorized by the cabinet, the U.S. Nuclear Regulatory Commission, or an agreement [~~Agreement~~] state [~~State~~].

(2) A sealed source shall be tested for leakage:

(a) At intervals not to exceed six (6) months;

(b) Using a method approved by the cabinet, the U.S. Nuclear Regulatory Commission, or an agreement state; and

(c)1. By taking a wipe sample from the nearest accessible point to the sealed source where contamination might accumulate.

2. The wipe sample shall be analyzed for radioactive contamination.

3. The analysis shall be capable of detecting the presence of 0.005 microcuries (185 Bq) of radioactive material on the test sample; and

4. The analysis shall be performed by a person specifically authorized by the cabinet, the U.S. Nuclear Regulatory Commission, or an agreement state to perform the analysis.

(3) A sealed source shall not be used by the licensee until tested for leakage, except if:

(a) The source is accompanied by a certificate from the transferor showing it to have been leak-tested within six (6) months preceding the transfer; or

(b) The source has been in storage and not in use for six (6) months or less.

(4) (a) A test conducted in accordance with subsections (1) and (2) of this section that [~~which~~] reveals the presence of 0.005 microcuries (185 Bq) or more of removable radioactive material shall be considered evidence that the sealed source is leaking.

(b) The licensee shall immediately withdraw the equipment involved from use and shall have it decontaminated and repaired or disposed of in accordance with 902 KAR 100:021.

(c) The licensee shall file a report with the Manager, Radiation Health [~~and Toxic Agents~~] Branch, Department of Public Health, 275 East Main Street, Frankfort, Kentucky 40621, within five (5) days of a test with results that exceed the threshold in this subsection.

(d) The report shall describe the equipment involved, the test results, and the corrective action taken.

(5) An exposure device using depleted uranium (DU) shielding and an "S" tube configuration shall be tested for DU contamination at intervals not to exceed twelve (12) months.

(a) The analysis shall be:

1. Capable of detecting the presence of 0.005 microcuries (185 Bq) of radioactive material on the test sample; and

2. Performed by a person specifically authorized by the cabinet, the U.S. Nuclear Regulatory Commission, or an agreement state to perform the analysis.

(b) If testing reveals the presence of 0.005 microcuries (185 Bq) or more of removable DU contamination, the exposure device shall be removed from use until an evaluation of the wear on the S-tube has been made.

(c) If the evaluation reveals that the S-tube is worn through, the device shall not be used again.

(d) A DU shielded device shall:

1. [~~Shall~~] Not require testing for DU contamination while in storage and not in use; and

2. [~~Shall~~] Require testing before use or transfer if the interval of storage exceeded twelve (12) months.

(6) (a) A licensee shall maintain records of leak test results for each sealed source or device containing DU.

(b) The results shall be stated in units of microcuries (becquerels).

(c) The licensee shall retain a record for three (3) years after it is made or until the source in storage is removed.

Section 7. Quarterly Inventory. (1) A licensee or registrant shall conduct a quarterly physical inventory to account for each source of radiation and each device containing depleted uranium received or possessed in accordance with the license.

(2) Records of the inventories shall be maintained for three (3) years from the date of the inventory for inspection by the cabinet. The records of inventories shall include:

(a) Radionuclide;

(b) Number of curies (becquerels) or mass (for DU) in a device;

(c) Location of sealed sources and devices;

(d) Date of the inventory;

(e) Name of the individual making the inventory; and

(f) Manufacturer, model number, and serial number of each sealed source or device, as appropriate.

Section 8. Utilization Logs. A licensee or registrant shall maintain utilization logs, which shall be kept available for inspection by the cabinet for three (3) years from the date of the recorded event, at the address specified in the license or on the registration, showing for a source of radiation the following information:

(1) A description including make, model, and serial number of the exposure device, radiation machine, or transport or storage container in which a sealed source is located;

(2) Identity and signature of the radiographer to whom assigned;

(3) Site or plant where used and dates of use;

(4) Date a source of radiation is removed from storage and returned to storage; and

(5) For permanent radiographic installations, the dates a radiation machine is energized.

Section 9. Inspection and Maintenance of Radiographic Exposure Devices, Radiation Machines, Transport and Storage Containers, Associated Equipment, Source Changes, and Survey Instruments. (1) A licensee or registrant shall perform:

(a) Visual and operability checks on survey meters, radiographic exposure devices, radiation machines, transport and storage containers, associated equipment, and source changers before use on a day the equipment is to be used to ensure that the:

1. Equipment is in good working condition;
2. Source is adequately shielded; and
3. Required labeling is present; and
(b) An operability check of survey instruments using check sources or other appropriate means.
(2) If an equipment problem is found, the equipment shall be removed from service until repaired.
(3) A licensee or registrant shall have written procedures for:
(a) Inspection and routine maintenance of radiographic exposure devices, radiation machines, source changers, associated equipment, transport and storage containers, and survey instruments at intervals not to exceed three (3) months, or before the first use[,] in order to ensure the proper functioning of components important to safety;
(b)[1.] Inspection and maintenance necessary to maintain the Type B packaging used to transport radioactive materials; and [.]
(c)[2.] Inspection and maintenance program to assure that a Type B package is shipped and maintained in accordance with the certificate of compliance, or other approval.
(4) A replacement component shall meet design specifications.[;]
(5) If an equipment problem is found, the equipment shall be removed from service until repaired.[;]
(6)(a) A record of equipment problems found in daily checks and quarterly inspections of radiographic exposure devices, transport and storage containers, associated equipment, source changers, and survey instruments and of any maintenance performed in accordance with subsections (1) through (3) of this section shall be kept for three (3) years for inspection by the cabinet.
(b)The record shall include:
1. The date of check or inspection;
2. Name of the inspector;
3. Equipment involved;
4. Problems found; and
5. What repair and maintenance was done.

Section 10. Permanent Radiographic Installations. (1) Permanent radiographic installations with an entrance used for personnel access to a high radiation area shall have:
(a) Entrance controls of the type described in 902 KAR 100:019, Section 14(1)(b) and[,] (c)[,] and Section 14(2) that reduce the radiation level upon entry into the area; or:
(b) Both visible and audible warning signals to warn of the presence of radiation.
1. The visible signal shall be activated by radiation if the source is exposed or the machine is energized.
2. The audible signal shall be activated if an attempt is made to enter the installation while the source is exposed or the machine is energized.
(2)(a) The alarm system shall be tested for proper operation with a radiation source at the beginning of each day[,] before the installation is used for radiographic operations.
(b) The test shall include a check of the visible and audible signals.
(c) Each entrance control device that reduces the radiation level upon entry, as designated in subsection (1) of this section, shall be tested monthly.
(3)(a) If an entrance device or alarm system is operating improperly, it shall be immediately labeled as defective and repaired within seven (7) calendar days.
(b) The facility may continue to be used during the seven (7) day repair period[,] if the licensee:
1. Implements the continuous surveillance requirements of Section 19 [20] of this administrative regulation; and
2. Uses an alarming ratemeter.
(4) Records of tests for entrance control and audible and visual alarms shall be maintained for inspection by the cabinet for three (3) years from the date of the test.

Section 11. Labeling, Storage, and Transportation. (1) A licensee shall not use a source changer or a container to store radioactive material unless the source changer or the storage container has securely attached to it a durable, legible, and clearly visible label bearing the standard trefoil radiation caution symbol conventional colors (magenta, purple or black on a yellow background, having a minimum diameter of twenty-five (25) millimeters), and the following words:
(a)1. CAUTION*; or
2. DANGER; [and]
(b) RADIOACTIVE MATERIAL; and
(c) NOTIFY:
1. CIVIL AUTHORITIES; or
2. ["]NAME OF COMPANY["].
(2) The licensee shall not transport radioactive material unless the material is packaged, and the package is labeled, marked, and accompanied with appropriate shipping papers in accordance with 10 C.F.R. [C.F.R.] Part 71.
(3) A locked radiographic exposure device, radiation machine, or storage container shall be physically secured to prevent tampering or removal by unauthorized personnel. The licensee shall store radioactive material in a manner that minimizes danger from explosion or fire.
(4) The licensee shall lock and physically secure the transport package containing radioactive material in the transporting vehicle to prevent accidental loss, tampering, or unauthorized removal of the radioactive material from the vehicle.

Section 12. Conducting Industrial Radiographic Operations. (1)(a) If radiography is performed at a location other than a permanent radiographic installation, the radiographer shall be accompanied by at least one (1) other qualified radiographer or an individual who has met the requirements of Section 14 of this administrative regulation. The additional qualified individual shall observe the operations and be capable of providing immediate assistance to prevent unauthorized entry.
(b) Radiography shall not be performed unless more than [if only] one (1) qualified individual is present.
(2) A radiographic operation conducted at a location of use authorized on the license shall be conducted in a permanent radiographic installation, unless specifically authorized by the cabinet.
(3) A licensee shall have one (1) year from the effective date of **June 27, 1998**[6-27-1999][this administrative regulation] to meet the requirement for having two (2) qualified individuals present at a location other than a permanent radiographic installation, as specified in subsection (1) of this section.

Section 13. Radiation Safety Officer for Industrial Radiography. The radiation safety officer (RSO) shall ensure that radiation safety is being performed in the daily operation of the licensee's program[,] in accordance with approved procedures and regulatory requirements.
(1) The minimum qualifications, training, and experience for RSOs for industrial radiography is as follows:
(a) Completion of the training and testing requirements of Section 14 of this administrative regulation;
(b) **2,000**[Two thousand][2,000] hours of hands-on experience as a qualified radiographer in industrial radiographic operations; and
(c) Formal training in the establishment and maintenance of a radiation protection program.
(2) The cabinet shall [may] consider alternatives if the RSO has:
(a) Appropriate training or experience in the field of ionizing radiation; and
(b) Adequate formal training in establishing and maintaining a radiation safety protection program.
(3) The specific duties and authorities of the RSO shall include:
(a) Establishing and overseeing operating, emergency and ALARA procedures as required by 902 KAR 100:019, and reviewing them regularly to ensure that the procedures in use conform to current 902 KAR 100:019 procedures, and conform to other requirements in 902 KAR Chapter 100 and to the license conditions.
(b) Overseeing and approving all phases of the training program for radiographic personnel, ensuring that appropriate and effective radiation protection is taught;
(c) Ensuring that:
1. Required radiation surveys and leak tests are performed and documented in accordance with 902 KAR Chapter 100 [the regula-

~~tions~~], including corrective measures if levels of radiation exceed established limits;

2. Personnel monitoring devices are calibrated and used properly by occupationally-exposed personnel;

3. Records are kept of the monitoring results;

4. Timely notifications are made as required by 902 KAR 100:019, Section 40; and

5. Operations are conducted safely; and

(d) Assuming control for instituting corrective actions including stopping of operations, if necessary.

(4) A licensee or registrant shall have two (2) years from the effective date of **June 27, 1999**[~~6-27-1999~~][~~this administrative regulation~~] to meet the requirements of subsections (1) and (2) of this section.

Section 14. Training. (1) A licensee or registrant:

(a)[~~(1)~~] Shall not permit an individual to act as a radiographer as defined in 902 KAR 100:010 until the individual has received:

1.[~~(a)~~] Formal training in the subjects identified in subsection (4) [~~(8)~~] of this section;

2.[~~(b)~~] At least two (2) months of on-the-job training; and

3.[~~(c)~~] Is certified through a radiographer certification program [~~,~~ by a certifying entity[~~,~~] in accordance with the criteria specified in Section 1 of this administrative regulation; or

(b)[~~(2)~~] May, until two (2) years from the effective date of **June 27, 1999**[~~6-27-1999~~][~~this administrative regulation~~], allow an individual who has not met the requirements of this section, to act as a radiographer if the individual has:

1.[~~(a)~~] Received training in the subjects identified in subsection (4) [~~(8)~~] of this section; and

2.[~~(b)~~] Demonstrated an understanding of the subjects by successful completion of a written examination previously submitted to and approved by the cabinet;

(c)[~~(3)~~] Shall not permit an individual to act as a radiographer until the individual has:

1.[~~(a)~~] Received copies of and instructions in the following:

a.[~~1.~~] Provisions contained in this administrative regulation;

b.[~~2. Other applicable~~] Provisions of 902 KAR 100:019, [~~902 KAR~~] 100:040, [~~902 KAR~~] 100:070, and [~~902 KAR~~] 100:165;

c.[~~3.~~] Conditions of the license or registration certificate issued by the cabinet; and

d.[~~4.~~] The licensee's or registrant's approved operating and emergency procedures;

2.[~~(b)~~] Demonstrated understanding of the licensee's license and operating and emergency procedures by successful completion of a written or oral examination covering this material;

3.[~~(c)~~] Received training in the:

a.[~~1.~~] Use of the licensee's sources of radiation, the registrant's radiation machine, and other radiation exposure devices;

b.[~~2.~~] Daily inspection of devices and associated equipment; and

c.[~~3.~~] Use of radiation survey instruments; and

4.[~~(d)~~] Demonstrated an understanding of the use of radiographic exposure devices, sources, survey instruments, and associated equipment described in paragraphs (a) and (c) of this subsection, by successful completion of a practical examination covering the material;

(d)[~~(4)~~] Shall not permit an individual to act as a radiographer's assistant as defined in 902 KAR 100:010 until the individual has:

1.[~~(a)~~] Received copies of[~~,~~] and instructions in the following:

a.[~~1.~~] Provisions contained in this administrative regulation;

b.[~~2. Applicable~~] Requirements of 902 KAR 100:019, [~~902 KAR~~] 100:040, [~~902 KAR~~] 100:070, and [~~902 KAR~~] 100:165;

c.[~~3.~~] Conditions of the license or registration certificate issued by the cabinet; and

d.[~~4.~~] The licensee's or registrant's operating and emergency procedures;

2.[~~(b)~~] Demonstrated competence to use, under the personal supervision of the radiographer, the sources of radiation, radiographic exposure devices, radiation machines, associated equipment, and radiation survey instruments that the assistant uses; and

3.[~~(c)~~] Demonstrated:

a. [~~1.~~] Understanding of the instructions provided in paragraph (a) of this subsection by successfully completing a written test on the subjects covered; and

b. [~~2.~~] Competence in the use of hardware described in paragraph (b) of this subsection by successfully completing a practical examination on the use of the hardware; and

(e)[~~(5)~~] Shall provide annual refresher safety training for a radiographer and radiographer's assistant at intervals not to exceed twelve (12) months.

(2)[~~(6)~~](a) Except in those operations in which [~~where~~] a single individual shall serve as both radiographer and RSO and shall perform all radiography operations, the RSO or designee shall conduct an inspection program of the job performance of a radiographer and radiographer's assistant to ensure that 902 KAR Chapter 100[~~the cabinet's regulations~~], license requirements, and the applicant's operating and emergency procedures are followed.[~~;~~]

(b) The inspection program shall include observation of the performance of the radiographer and radiographer's assistant during an actual industrial radiographic operation, at intervals not to exceed six (6) months;

(c) If a radiographer or a radiographer's assistant has not participated in an industrial radiographic operation for more than six (6) months since the last inspection, the radiographer shall demonstrate knowledge of the training requirements of subsection (3)[~~(c)~~] of this section and the radiographer's assistant shall demonstrate knowledge of the training requirements of subsection (1)(d)2 [~~(4)(b)~~] of this section by a practical examination before either person may next participate in a radiographic operation; and

(d) The cabinet shall consider alternatives in those situations in which [~~where~~] the individual serves as both radiographer and RSO.

(3)[~~(7)~~] Records of training specified in subsection (1)(c)[~~(3)~~] of this section shall be maintained by a licensee or registrant for inspection by the cabinet for three (3) years after the record is made.

(a) Records shall include:

1. Radiographer certification documents;

2. Verification of certification status;

3. Copies or written tests;

4. Dates of oral tests and practical examinations;

5. Names of individuals conducting and receiving the oral and practical examinations; and

6. Documentation of annual refresher safety training and semi-annual inspections of job performance for a radiographer and a radiographer's assistant, which shall include:[~~;~~]

a. Topics discussed during the refresher safety training;

b Dates the annual refresher safety training was conducted; and

c. Names of the instructors and attendees.

(b) For inspections of job performance, the records shall also include a list showing the items checked and all noncompliances observed by the RSO.

(4)[~~(8)~~] The licensee or registrant shall include the following subjects required in subsection (1)(b)[~~(2)~~] of this section:

(a) Fundamentals of radiation safety including:[~~;~~]

1. Characteristics of gamma radiation;

2. Units of radiation dose and quantity of radioactivity;

3. Hazards of exposure to radiation;

4. Levels of radiation from radioactive material; and

5. Methods of controlling radiation dose by time, distance, and shielding;

(b) Radiation detection instruments including:

1. Use, operation, calibration, and limitations of radiation survey instruments;

2. Survey techniques; and

3. Use of personnel monitoring equipment;

(c) Equipment to be used including:

1. Operation and control of radiographic exposure equipment, remote handling equipment, and storage containers, including pictures or models of source assemblies (pigtails);

2. Storage, control, and disposal of radioactive material;

3. Inspection and maintenance of equipment; and

4. Operation and control of radiation machines;

(d) The requirements of 902 KAR Chapter 100, as applicable[~~pertinent cabinet administrative regulations~~]; and

(e) Case histories of accidents in radiography.

(5)[~~(9)~~] A licensee or registrant [~~Licensees and registrants~~]

shall have one (1) year from **June 27, 1998[**~~6-27-1998~~**]**[~~the effective date of this administrative regulation~~] to comply with the additional training requirements specified in subsections (1)(c) and (d)[~~(3)(a) and (4)(a)~~] of this section.

(6)[~~(10)~~] Licensees and registrants shall have one (1) year from **June 27, 1999[**~~6-27-1999~~**]**[~~the effective date of this regulation~~], to comply with the certification requirements specified in subsection (1) of this section. Records of radiographer certification maintained in accordance with
subsection (3)[~~(7)~~] of this section shall provide appropriate affirmation of certification requirements specified in subsection (1) of this section.

Section 15. Operating and Emergency Procedures. (1) A licensee's or registrant's operating and emergency procedures shall include instructions in at least the following:

(a) The handling and use of sources of radiation to be employed so an individual is not likely to be exposed to radiation doses in excess of the limits established in 902 KAR 100:019, Section 3;

(b) Methods and occasions for conducting radiation surveys;

(c) Methods for controlling access to radiographic areas;

(d) Methods and occasions for locking and securing a source of radiation, radiographic exposure device, or transport and storage container;

(e) Personnel monitoring and the use of personnel monitoring equipment, including steps that shall be taken immediately by radiography personnel if a pocket dosimeter is found to be off-scale or an alarm ratemeter alarms unexpectedly;

(f) Transportation of sources of radiation to field locations, including:

1. Packing of a radiographic exposure device and storage container in a vehicle;

2. Placarding of a vehicle if needed; and

3. Control of sources of radiation during transportation;

(g) Minimizing exposure of individuals if an accident occurs;

(h) The procedure for notifying proper personnel if an accident occurs;

(i) Maintenance of records; and

(j) The inspection, maintenance, and operability checks of radiographic exposure devices, radiation machines, storage containers, survey instruments, and transport containers.

(2) The licensee or registrant shall maintain copies of current operating and emergency procedures until the cabinet terminates the license.

(3) Superseded material shall be retained for three (3) years after the change is made.

Section 16. Personnel Monitoring. (1) A licensee or registrant shall not permit an
individual to act as a radiographer or radiographer's assistant unless, at all times during radiographic operations, the individual wears[~~,~~] on the trunk of the body[~~,~~] a direct reading pocket dosimeter,[~~;~~] an operating alarm ratemeter,[~~;~~] and a personal dosimeter that is processed and evaluated by an accredited National Voluntary Laboratory Accreditation Program (NVLAP) processor [~~film badge or a thermoluminescent dosimeter (TLD)~~].

(2)[~~(a)~~] The wearing of an alarm ratemeter shall not be required for permanent radiography facilities in which another appropriate alarming or warning device is in routine use[~~,~~] or during radiographic operations using radiation machines.

(3)[~~(b)~~] Pocket dosimeters shall have a range from zero to at least 200 milliroentgens (two (2) millisieverts) and shall be recharged daily or at the start of a shift. Electronic personal dosimeters may be used in place of ion-chamber pocket dosimeters only.

(4)[~~(c)~~] A personal [~~film badge or thermoluminescent~~] dosimeter shall be assigned to, and worn by, only one (1) individual.

(5)[~~(d)~~] A film badge shall be replaced each month, and other personal dosimeters processed and evaluated by an accredited NVLAP processor shall be replaced at intervals **not[**~~no~~**]** to exceed [~~a TLD shall be replaced each~~] three (3) months.

(6)[~~(e)~~] After replacement, each personal dosimeter [~~a film badge or TLD~~] shall be processed as soon as possible.

(7)[~~(2)~~] Direct reading dosimeters, such as pocket dosimeters or electronic personal dosimeters, shall be read and exposures recorded at the beginning and end of a shift.

(a) If an individual's pocket dosimeter is found to be off scale, or if the electronic personal dosimeter [~~disometer~~] reads greater than 200 millirems (two (2) millisieverts), and the possibility of radiation exposure cannot be ruled out as the cause:

1. The individual's personal [~~film badge or thermoluminescent~~] dosimeter shall be sent for processing within twenty-four (24) hours;

2. Radiographic operations by the individual shall cease; and

3. The individual shall not return to work with sources of radiation until a determination of the radiation exposure has been made by the RSO or the RSO's designee. The results shall be included in the records maintained in accordance with paragraph (b) of this subsection and subsection (9)[~~(4)~~](b) of this section.

(b) A licensee or registrant shall maintain the following exposure records:

1. Direct reading dosimeter readings and yearly operability checks for three (3) years after the record is made;

2. Reports received from the NVLAP processor of personal dosimeter results [~~film badge or TLD processor~~] until the cabinet terminates the license; and

3. Records of estimates of exposures as a result of off-scale personal direct reading dosimeters, or lost or damaged personal dosimeters [~~film badges or TLDs~~], until the cabinet terminates the license.

(8)[~~(3)~~] If a personal [~~film badge or thermoluminescent~~] dosimeter is lost or damaged, the worker shall cease work immediately until:

(a) A replacement personal [~~film badge or thermoluminescent~~] dosimeter meeting the requirements of subsection (1) of this section is provided; and

(b) The exposure is calculated for the time period from issuance to loss or damage of the personal [~~film badge or thermoluminescent~~] dosimeter. The results of the calculated exposure and the time period for which the personal dosimeter [~~film badge or TLD~~] was
lost or damaged shall be included in the records maintained in accordance with subsection (7)[~~(2)~~] of this section.

(9)[~~(4)~~](a) Pocket dosimeters, or electronic personal dosimeters, shall be checked for correct response to radiation at periods not to exceed twelve (12) months.

(b) Acceptable dosimeters shall read within plus or minus twenty (20) percent of the true radiation exposure.

(10)[~~(5)~~](a) An alarm ratemeter shall:

1. Be checked to ensure that the audible alarm functions properly prior to use at the start of a shift;

2. Be set to give an alarm signal at a preset dose rate of 500 mR/hr (5mSv/hr);

3. Require special means to change the preset alarm functions;

4. Be calibrated at periods not to exceed twelve (12) months for correct response to radiation; and

5. Alarm within plus or minus twenty (20) percent of the true radiation dose rate.

(b) Records of alarm ratemeter calibrations shall be maintained for three (3) years after the record is made.

Section 17. Documents Required at Field Stations and Temporary Job Sites. A licensee or registrant shall have the following records available for inspection by the cabinet at each field station, if applicable, and at each job site:

(1) A copy of the operating and emergency procedures;

(2) A current copy of the radioactive material license or registration certificate;

(3) A copy of 902 KAR 100:019, [~~902 KAR~~] 100:100, and [~~902 KAR~~] 100:165;

(4) Latest survey records required by Section 22[~~20~~] of this administrative regulation;

(5) Records of direct reading dosimeters, such as pocket dosimeters or electronic personal dosimeters readings, as required by Section 16 of this administrative regulation;

(6) Evidence of The latest instrument calibration of the radiation survey instrumentation in use at the site, as required by Sec-

tion 5 of this administrative regulation;

(7) Utilization records for each radiographic exposure device dispatched from that location, as required by Section 8 of this administrative regulation;

(8) Records of equipment problems identified in daily checks of equipment required by Section 9 of this administrative regulation;

(9) Records of alarm system and entrance control checks required by Section 10 of this administrative regulation, if applicable;

(10) Evidence of the latest calibrations of alarm ratemeters and operability checks of pocket dosimeters and electronic personal dosimeters, as required by Section 16 of this administrative regulation;

(11) The shipping papers for the transportation of radioactive materials required by 902 KAR 100:070; and

(12) If operating in accordance with reciprocity pursuant to 902 KAR 100:065, a copy of the agreement [~~Agreement~~] state [~~State~~] or U.S. Nuclear Regulatory Commission license authorizing the use of radioactive materials.

Section 18. Specific Provisions for Radiographic Personnel Performing Industrial Radiography. (1) At a job site, the following shall be supplied by a licensee or registrant:

(a) At least one (1) operable, calibrated survey instrument for every exposure device or radiation machine in use;

(b) A current whole body personnel monitor (TLD or film badge) for an individual performing radiographic operations;

(c) An operable, calibrated pocket dosimeter with a range of zero to 200 milliroentgens for a worker performing radiographic operations;

(d) Appropriate barrier ropes and signs; and

(e) An operable, calibrated, alarming ratemeter for every person performing radiographic operations using a radiographic exposure device.

(2) A radiographer at a job site shall have on the radiographer's [~~their~~] person a valid certificate ID card issued by a certifying entity.

(3) An industrial radiographic operation shall not be performed if the items in subsections (1) and (2) of this section are not available at the job site or they are inoperable.

(4) During an inspection by the cabinet, the cabinet shall [~~may~~] terminate an operation if items in subsections (1) and (2) of this section are not available or not operable, or if the required number of radiographic personnel are not present. Operations shall not be resumed until required conditions are met.

Section 19. Surveillance. During a radiographic operation, a radiographer or the other individual present, as required by Section 12 of this administrative regulation, shall maintain direct visual surveillance of the operation to protect against unauthorized entry into a high radiation area, except at a permanent radiographic installation where:

(1) Entryways are locked; and

(2) The requirements of Section 10 of this administrative regulation are met.

Section 20. Posting. (1) An area in which radiography is being performed shall be conspicuously posted, as required in 902 KAR 100:019, Section 24(1) and (2).

(2) Exceptions listed in 902 KAR 100:019 do not apply to an industrial radiographic operation.

Section 21. Special Provisions and Exemptions for Cabinet X-ray Systems. (1) The use of a certified or certifiable cabinet x-ray system shall be exempt from the requirements of this administrative regulation, except for the following:

(a) For certified and certifiable cabinet x-ray systems, including those designed to allow admittance of individuals:

1. A registrant shall not permit an individual to operate a cabinet x-ray system until the individual has received a copy of and instruction in the operating procedures for the unit.

2. A test for proper operation of interlocks shall be conducted and recorded at intervals not to exceed six (6) months.

3. A registrant shall perform an evaluation of the radiation dose limits to determine compliance with 902 KAR 100:019, Section 10, and 21 C.F.R. [~~C.F.R.~~] 1020.40, Cabinet X-ray Systems,**[**~~39 Federal Register 12986, April 10, 1974,~~**]** at intervals not to exceed one (1) year.

4. Records shall be maintained demonstrating compliance with subsections (1)(a)1 and 2 of this section until disposal is authorized by the cabinet.

5. Records of the evaluation required by subparagraph 3 of this paragraph shall be maintained for two (2) years after the evaluation is performed.

(b)1. Certified cabinet x-ray systems shall be maintained in compliance with 21 C.F.R. [~~C.F.R.~~] 1020.40, Cabinet X-ray Systems**[**~~, 39 Federal Register 12986, April 10, 1974~~**]**.

2. A modification shall not be made to the system unless prior cabinet approval has been granted.

(2) An industrial use of a hand-held light intensified imaging device shall be exempt from the requirements of this administrative regulation if the dose rate eighteen (18) inches from the source of radiation to any individual does not exceed two (2) millirem per hour. A device exceeding this limit shall meet the applicable requirements of this administrative regulation and the licensing or registration requirements of 902 KAR 100:040 and [~~902 KAR~~] 100:110, as applicable.

Section 22. Radiation Surveys and Survey Records. (1) A radiographic operation shall not be conducted unless calibrated and operable radiation survey instrumentation, as described in Section 5 of this administrative regulation, is available and used at a location of radiographic operations.

(2) A survey with a radiation survey instrument shall be made after a radiographic exposure[~~,~~] of the radiographic exposure device and the guide tube[~~,~~] if approaching the device or guide tube to determine that the sealed source has been returned to its shielded position before exchanging films, repositioning the exposure head, or dismantling equipment.

(3) A survey shall be conducted of the radiographic exposure device with a calibrated radiation survey instrument if the source is exchanged and if a radiographic exposure device is placed in a storage area, to ensure that the source is in its shielded position.

(4) A physical radiation survey shall be made after a radiographic exposure using radiographic machines to determine that the machine is "off."[~~,~~]

(5) Records shall be kept of the exposure device survey conducted before the device is placed in storage as specified in subsection (3) of this section[~~,~~] if that survey is the last one performed in the workday. The records shall be maintained for inspection by the cabinet for three (3) years after it is made.

Section 23. Supervision of Radiographer's Assistant. (1) If a radiographer's assistant uses radiographic exposure devices, associated equipment, sealed sources, or conducts radiation surveys required by Section 22 of this administrative regulation to determine that the sealed source has returned to the shielded position after an exposure or the radiation machine is off, the radiographer's assistant shall be under the personal supervision of a radiographer.

(2) The radiographer shall:

(a)[~~(1)~~] Be physically present at the site where a source of radiation and associated equipment is being used;

(b)[~~(2)~~] Watch, by direct visual observation, the performance of the operations performed by the radiographer's assistant[~~,~~] referred to in this section; and

(c)[~~(3)~~] Be in close proximity so that immediate assistance shall be given if required.

Section 24. Reporting Requirements. (1) In addition to the reporting requirements specified in 902 KAR 100:040, Section 15[~~8~~], and in accordance with other sections of this administrative regulation, a licensee or registrant shall provide a written report to the Cabinet for Health and Family Services, Radiation Health [~~and Toxic Agents~~] Branch within thirty (30) days of the occurrence of the following incidents involving radiographic equipment:

(a) Unintentional disconnection of the source assembly from

the control cable;

(b) Inability to retract the source assembly to its fully shielded position and secure it in this position;

(c) Failure of a component, critical to safe operation of the device, to properly perform its intended function; [~~or~~]

(d) Failure of an indicator on a radiation machine to show that radiation is being produced;

(e) Failure of an exposure switch to terminate production of radiation if turned to the off position; or

(f) Failure of a safety interlock to terminate x-ray production.

(2) The licensee or registrant shall include the following information in a report submitted in accordance with subsection (1) of this section:

(a) A description of the equipment problem;

(b) Cause of an incident, if known;

(c) Manufacturer and model number of equipment involved in the incident;

(d) Place, time, and date of the incident;

(e) Actions taken to establish normal operations;

(f) Corrective actions taken or planned to prevent recurrence; and

(g) Qualifications of personnel involved in the incident.

(3) A report of an overexposure submitted under 902 KAR 100:019, Section 40, involving failure of a safety component of radiography equipment shall include the information specified in subsection (2) of this section.

(4) A licensee shall notify the cabinet if conducting radiographic operations or storing radioactive material at a location not listed on the license for a period in excess of 180 days in a calendar year.

Section 25. Incorporation by Reference. (1) The American National Standard Institute (ANSI) N432-1980, "Radiological Safety for the Design and Construction of Apparatus for Gamma Radiography", published in NBS Handbook 136, issued January 1981, is incorporated by reference.

(2) This material may be inspected, copied, or obtained, subject to applicable copyright law, at the Department for Public Health, Office of the Commissioner, 275 East Main Street, Frankfort, Kentucky 40621, Monday through Friday, 8 a.m. until 4:30 p.m.

WILLIAM D. HACKER, MD FAAP, CPE, Commissioner
JANIE MILLER, Secretary

APPROVED BY AGENCY: July 13, 2011

FILED WITH LRC: July 14, 2011 at noon

CONTACT PERSON: Jill Brown, Office of Legal Services, 275 East Main Street 5 W-B, Frankfort, Kentucky 40601, phone 502-564-7905, fax 502-564-7573.

CABINET FOR HEALTH AND FAMILY SERVICES
Department for Medicaid Services
Division of Community Alternatives
(As Amended at ARRS, October 11, 2011)

907 KAR 1:595. Model Waiver II service coverage and reimbursement[~~services and payments~~].

RELATES TO: KRS 314.011, 42 C.F.R. 440.70, 440.185, 42 U.S.C. 1396**, 42 U.S.C. 1396n(c)**

STATUTORY AUTHORITY: KRS 194A.030(2), 194A.050(1), 205.520(3), 42 U.S.C. 1315[~~, EO 2004-726~~]

NECESSITY, FUNCTION, AND CONFORMITY: [~~EO 2004-726, effective July 9, 2004, reorganized the Cabinet for Health Services and placed the Department for Medicaid Services and the Medicaid Program under the Cabinet for Health and Family Services.~~]The Cabinet for Health and Family Services, Department for Medicaid Services, has responsibility to administer the Medicaid Program. KRS 205.520(3) authorizes the cabinet, by administrative regulation, to comply with any requirement that may be imposed or opportunity presented, by federal law for the provision of medical assistance to Kentucky's indigent citizenry. This administrative regulation establishes the coverage provisions relating to Model Waiver II services provided to a Medicaid-eligible recipient. These services are provided pursuant to a waiver granted by the U. S. Department for Health and Human Services in accordance with 42 U.S.C. 1396n(c).

Section 1. Definitions. (1) "1915(c) home and community based waiver program" means a Kentucky Medicaid program established pursuant to and in accordance with 42 U.S.C. 1396n(c).

(2) "Department" means the Department for Medicaid Services or its designee.

(3)[~~and its designated agent or representative.~~

~~(2)~~] "Home health agency" means an agency that is:

(a) Licensed in accordance with 902 KAR 20:081;

(b) Medicare certified; and

(c) Medicaid certified.

(4) "Licensed practical nurse" is defined by KRS 314.011(9).

(5)[~~a facility licensed by the Office of the Inspector General to provide home health services.~~

~~(3)~~] "Model Waiver II services" means 1915(c) home and community based waiver program[~~community-based waiver~~] in-home ventilator services provided to a Medicaid-eligible recipient who:

(a) Is dependent on a ventilator; and

(b) Would otherwise require a nursing facility (NF) level of care in a hospital based NF which will accept a recipient who is dependent on a ventilator.

(6) "Private duty nursing agency" means a facility licensed to provide private duty nursing services:

(a) By the Cabinet for Health and Family Services**,** Office of Inspector General; and

(b) Pursuant to 902 KAR 20:370.

(7) "Recipient" is defined by KRS 205.8451(9).

(8)[~~(4)~~] "Registered nurse" [~~(RN)~~]is defined by[~~in~~] KRS 314.011(5).

(9) "Registered respiratory therapist" is defined by KRS **314A.010(3)(a)**[~~31A.010(3)~~**]**.

(10) "Ventilator" means a respiration stimulating mechanism.

(11)[~~(5) "Licensed practical nurse" (LPN) is defined in KRS 314.011.~~

~~(6) "Respiratory therapist" (RT) is defined by KRS 314A.010(3)(a).~~

~~(7)~~] "Ventilator dependent" means the condition or state of an individual who**:**

(a) Requires the aid of a ventilator [~~(respiration stimulating mechanism)~~]for respiratory function**;** and

(b) Meets the high intensity nursing facility patient status criteria established in 907 KAR 1:022, Section 4.

Section 2. Model Waiver II Recipient Eligibility and Related Policies. (1) To be eligible to receive Model Waiver II services, an individual shall:

(a) Be eligible for Medicaid pursuant to 907 KAR 1:605;

(b) Require ventilator support for at least twelve (12) hours per day;

(c) Meet ventilator dependent patient status requirements established in 907 KAR 1:022;

(d) Submit **to the department** an application packet **[**~~to the department~~**]** which shall contain:

1. A MAP 350, Long Term Care Facilities and Home and Community Based Program Certification Form;

2. A MAP-351A, Medicaid Waiver Assessment Form; and

3. A MAP109 -MWII, Plan of Care/Prior Authorization for Model Waiver II Services, which shall be signed and dated by a physician; and

(e) Receive notification of an admission packet approval from the department.

(2) To remain eligible for Model Waiver II services**, the requirements established in this subsection shall be met.[**~~:~~**]**

(a) An individual shall:

1. Maintain Medicaid eligibility requirements established in 907 KAR 1:605; and

2. Remain ventilator dependent pursuant to 907 KAR 1:022**.[**~~;~~**]**

(b) A Model Waiver II level of care determination confirming that the individual qualifies shall be performed and submitted to the department every six (6) months**.[**~~; and~~**]**

(c) A MAP 109, Plan of Care/Prior Authorization for Model Waiver II Services shall be:

1. Signed and dated by a physician every sixty (60) days on behalf of the individual; and

2. Submitted to the department, after being signed and dated in accordance with subparagraph 1 of this paragraph, every sixty (60) days.

(3)[~~(4)~~**]** A Model Waiver II service shall not be provided to a recipient who is:

(a) Receiving a service in another 1915(c) home and community based waiver program; or

(b) **[**~~Is~~**]** An inpatient of **[**a**]**:

1. **A** nursing facility;

2. **An** intermediate care facility for individuals with mental retardation or a developmental disability; or

3. **Another[**~~Other~~**]** facility.

(4)[~~(5)~~**]** The department shall not authorize a Model Waiver II service unless it has ensured that:

(a) Ventilator **[-]**dependent status has been met;

(b) The service **[**~~is~~**]**:

1. **Is** available to the recipient; **[**~~and~~**]**

2. Will meet the need of the recipient; and

3. Does not exceed the cost of traditional institutional ventilator care.

Section 3. Provider Participation Requirements. To participate in the Model Waiver II program, a **home health agency or private duty nursing agency shall:**

(1) Be a currently participating Medicaid provider in accordance with 907 KAR 1:671;

(2) Be currently enrolled as a Medicaid provider in accordance with 907 KAR 1:672; and

(3) Meet the home and community based waiver service provider requirements established in 907 KAR 1:160.[~~:~~

~~(1) Home health agency shall:~~

~~(a) Be:~~

~~1. Licensed in accordance with 902 KAR 20:081;~~

~~2. Medicare and Medicaid certified;~~

~~3. A currently participating Medicaid provider in accordance with 907 KAR 1:671;~~

~~4. Currently enrolled as a Medicaid provider in accordance with 907 KAR 1:672; and~~

~~(b) Meet the home and community based waiver service provider requirements established in 907 KAR 1:160;~~

~~(2) Private duty nursing agency shall:~~

~~(a) Be:~~

~~1. Licensed in accordance with 902 KAR 20:370;~~

~~2. Medicare and Medicaid certified;~~

~~3. A currently participating Medicaid provider in accordance with 907 KAR 1:671; and~~

~~4. Currently enrolled as a Medicaid provider in accordance with 907 KAR 1:672; and~~

~~(b) Meet the home and community based waiver service provider requirements established in 907 KAR 1:160.~~**]** [~~General Coverage Provisions. (1) A service shall be provided to a Medicaid eligible recipient:~~

~~(a) Who meets the NF level-of-care determination for ventilator dependency; and~~

~~(b) For whom the cost of Model Waiver II services does not exceed the cost of traditional institutional ventilator care.~~

~~(2) The department shall make the level-of-care determination.~~

~~(3) A Medicaid eligible recipient may choose Model Waiver II services as an alternative to traditional institutional services.~~

~~(4) A Medicaid eligible recipient requesting to receive Model Waiver II services shall choose a qualified home health agency which has obtained a valid provider number for provision of services pursuant to 907 KAR 1:672.~~

~~Section 3. Provider Participation. A home health agency participating in the Model Waiver II Program shall meet the applicable certification requirements for providing home- and community-based waiver services in accordance with 907 KAR 1:671, 907 KAR 1:672, 907 KAR 1:675 and 907 KAR 1:030.~~]

Section 4. Covered Services. (1) The following shall be covered Model Waiver II services:

(a) Skilled nursing provided by:

1. A registered nurse[~~(RN)~~]; or

2. A licensed practical nurse[~~(LPN)~~]; or

(b) Respiratory therapy[~~(RT)~~].

(2) Model Waiver II services shall be provided by an[~~a qualified~~] individual employed by or under contract through a private duty nursing agency or [~~the~~]home health agency as a:

(a) **[**A**]** Registered nurse[~~(RN)~~]; **[**~~or~~**]**

(b) **[**A**]** Licensed practical nurse[~~(LPN)~~]; or

(c) Registered respiratory therapist. [~~Section 5. Prior Authorization for a Service. (1) Prior to authorizing a Model Waiver II service, the department shall ensure that:~~

~~(a) Client ventilator-dependent status is met;~~

~~(b) Service is available to meet the need of a recipient; and~~

~~(c) The service does not exceed the cost of traditional institutional ventilator care.~~

~~(2) A physician shall:~~

~~(a) Evaluate the need for continuation of service; and~~

~~(b) Submit a completed MAP-9, Prior Authorization for Health Services, and a signed plan of treatment at least once every sixty (60) days.~~]

Section **5.[**~~6.~~**]** Payment for Services. The department shall reimburse a participating home health agency or private duty nursing agency for the provision of covered Model Waiver II services as **established in this section.[**~~follows:~~**]**

(1) Reimbursement shall be based on a fixed fee for a unit of service provided for each covered service referenced[~~defined~~] in Section 4 of this administrative regulation with one (1) hour equal to one (1) unit of service.

(2) The fixed fee for skilled nursing services provided by:

(a) A registered nurse [~~(RN)~~]shall be thirty-one (31) dollars and ninety-eight (98) cents for each unit of service**;[**~~.~~**]**

(b) A licensed practical nurse [~~(LPN)~~] shall be twenty-nine (29)[~~(20)~~] dollars and ten (10) cents for each unit of service**; and[**~~.~~**]**

(c) A registered respiratory therapist [~~(RT)~~]shall be twenty-seven (27) dollars and forty-two (42) cents for each unit of service.

(3) Reimbursement shall not exceed sixteen (16) units of service per day.

(4) Payment shall not be made for a service to an individual for whom it can reasonably be expected that the cost of the 1915(c) home and community based waiver program[~~home- and community-based~~] service furnished under this administrative regulation would exceed the cost of the service if provided in a hospital-based NF.

Section **6.[**~~7.~~**]** Maintenance of Records. (1) A Model Waiver II service provider shall maintain:

(a) A clinical record for each HCB recipient which **shall** contain the following:

1. Pertinent medical, nursing, and social history;

2. A comprehensive assessment entered on a MAP-351A, Medicaid Waiver Assessment Form**,** and signed by the:

a. Assessment team; and

b. Department;

3. A completed MAP109 -MWII, Plan of Care/Prior Authorization for Model Waiver II Services;

4. A copy of the MAP 350, Long Term Care Facilities and Home and Community Based Program Certification Form signed by the recipient or **the recipient's[**~~his~~**]** legal representative at the time of application or reapplication and each recertification thereafter;

5. Documentation of all level of care determinations;

6. All documentation related to prior authorizations including requests, approvals, and denials;

7. Documentation that the recipient or legal representative was informed of the
procedure for reporting complaints; and

8. Documentation of each service provided that shall include:

a. The date the service was provided;

b. The duration of the service;

c. The arrival and departure time of the provider, excluding travel time, if the service was provided at the recipient's home;

d. Progress notes which shall include documentation of changes, responses, and treatments utilized to evaluate the recipient's needs; and

e. The signature of the service provider; and

(b) **Incident reports as required by Section 7 of this administrative regulation if an incident with the recipient occurs.**[~~Service records or incident reports regarding services provided.~~]

(2) **(a) Except as provided in paragraph (b) of this subsection, a clinical**[~~A service~~] record or incident report shall be retained[~~:~~

~~(a)~~] for at least six (6) years from the date that a covered service is provided**.**

(b) If the recipient is a minor, a clinical record or incident report shall be retained for three (3) years after the recipient reaches the age of majority under state law, if that is a longer time period than the time period required by paragraph (a) of this subsection.

(3) [~~; or~~

~~(b) For a minor, at least for three (3) years after the recipient reaches the age of majority under state law, whichever is longest.~~

~~(2)~~] Upon request, **a**[~~an HCB~~] provider shall make information regarding service and financial records available to the:

(a) Department;

(b) Cabinet for Health and Family Services, Office of Inspector General or its designee;

(c) United States Department for Health and Human Services or its designee;

(d) General Accounting Office or its designee;

(e) Office of the Auditor of Public Accounts or its designee; or

(f) Office of the Attorney General or its designee.

Section **7.**[~~8.~~] Incident Reporting. A Model Waiver II service provider shall:

(1) Implement a procedure or procedures to ensure that the following is reported:

(a) Abuse, neglect, or exploitation of a Model Waiver II recipient in accordance with KRS Chapters 209 or 620;

(b) A slip or fall;

(c) A transportation incident;

(d) Improper administration of medication;

(e) A medical complication; or

(f) An incident caused by the recipient, including:

1. Verbal or physical abuse of staff or other recipients;

2. Destruction or damage of property; or

3. Recipient self-abuse**;**[~~.~~]

(2) Ensure that a copy of each incident reported in this subsection is maintained in a central file subject to review by the department; and

(3) Implement a process for communicating the incident, the outcome, and the prevention plan to:

1. The Model Waiver II service recipient involved, his or her family member, or his or her responsible party; and

2. The attending physician, physician assistant, or advanced practice registered nurse.

Section **8.**[~~9.~~] Use of Electronic Signatures. (1) The creation, transmission, storage, and
other use of electronic signatures and documents shall comply with the requirements
established in KRS 369.101 to 369.120.

(2) A Model Waiver II service provider that chooses to use electronic signatures shall:

(a) Develop and implement a written security policy that shall:

1. Be adhered to by each of the provider's employees, officers, agents, and contractors;

2. Identify each electronic signature for which an individual has access; and

3. Ensure that each electronic signature is created, transmitted, and stored in a secure fashion;

(b) Develop a consent form that shall:

1. Be completed and executed by each individual using an electronic signature;

2. Attest to the signature's authenticity; and

3. Include a statement indicating that the individual has been notified of his **or her** responsibility in allowing the use of the electronic signature; and

(c) Provide the department with:

1. A copy of the provider's electronic signature policy;

2. The signed consent form; and

3. The original filed signature immediately upon request.

Section **9.**[~~10.~~][~~Section 7.~~] Appeal Rights. (1) An appeal of a negative action regarding a Medicaid recipient shall be appealed in accordance with 907 KAR 1:563.

(2) An appeal of a negative action regarding a Medicaid beneficiary's eligibility shall be appealed in accordance with 907 KAR 1:560.

(3) An appeal of a negative action regarding a Medicaid provider shall be appealed in accordance with 907 KAR 1:671.

Section **10.**[~~11.~~][~~8.~~] Incorporation by Reference. (1) The following material is incorporated by reference [~~into this administrative regulation~~]:

(a) A "MAP109 -MWII, Plan of Care/Prior Authorization for Model Waiver II Services", April 2004 edition;

(b) A "MAP 350, Long Term Care Facilities and Home and Community Based Program Certification Form", January 2000 edition; and

(c) A "MAP-351A, Medicaid Waiver Assessment Form", June 15, 2002 edition.

(2) **This**[~~The~~] material [~~referenced in subsection (1) of this section~~][~~"MAP-9, Prior Authorization for Health Services", December 1995 edition, is incorporated by reference.~~

~~(2) It~~] may be inspected, copied, or obtained**, subject to applicable copyright law,** at the Department for Medicaid Services, 275 East Main Street, Frankfort, Kentucky 40621, Monday through Friday, 8 a.m. to 4:30 p.m.

NEVILLE WISE, Acting Commissioner
JANIE MILLER, Secretary

APPROVED BY AGENCY: July 18, 2011

FILED WITH LRC: July 21, 2011 at noon.

CONTACT PERSON: Jill Brown, Office of Legal Services, 275 East Main Street 5 W-B, Frankfort, Kentucky 40601, phone (502) 564-7905, fax (502) 564-7573.

CABINET FOR HEALTH AND FAMILY SERVICES[~~SREVICES~~]
Department for Developmental Health, Developmental and Intellectual Disabilities Division of Behavioral Health
(As Amended at ARRS – prior to its deferral, October 11, 2011)

908 KAR 1:310. Certification standards and administrative procedures for driving under the influence programs.

RELATES TO: KRS 189A.010, 189A.040, 189A.045, 189A.070, 222.003, 222.005, 222.221, 222.231, 222.271,**[**~~and~~**]** 222.990

STATUTORY AUTHORITY: KRS 189A.040(6), 194A.030(5), 194A.050(1)**[**~~, EO 2004-726~~**]**

NECESSITY, FUNCTION, AND CONFORMITY: **[**~~EO 2004-726, effective July 9, 2004, reorganized the Cabinet for Health Services and placed the Department for Behavioral Health, Developmental and Intellectual Disabilities~~**]** [~~Mental Health and Mental Retardation~~] **[**~~within the cabinet.~~**]** KRS 189A.040(6) requires the Cabinet to promulgate administrative regulations to prescribe standards for the licensing and operation of the alcohol **or substance abuse**[~~and other drug~~**]** education and treatment facilities and programs that provide assessment, education, and treatment services to offenders convicted of driving under the influence pursuant to KRS 189A.010. This administrative regulation establishes certification requirements and minimum standards for an individual or other entity operating a DUI program.

Section 1. Definitions. (1) "Accredited college or university" means an institution listed in the most recent College Handbook published by College Board Publications, P.O. Box 886, New York, New York 10023-0886.

(2) "Affidavit of indigency" is defined **by[**~~in~~**]** KRS **31.120(3)[**~~31.120(6)~~**]**.

(3) "Alcohol and other drug-free work place" means a program's policy to**:**

(a) Prohibit the unlawful manufacture, distribution, possession**,** or use of a controlled substance**;** and

(b)[~~to~~**]** Establish the disciplinary action to be taken if the policy is violated.

(4) "Assessment" means a procedure administered to an individual convicted of DUI that includes the administration of the PC-based or the online Kentucky DUI [~~a computerized~~] Assessment Instrument, a clinical interview, a determination by the assessor of a client's needs, a discussion of available options**,** and referral to services that provide an appropriate level of care in relation to the client's needs.

(5) "Cabinet" is defined **by[**~~in~~**]** KRS **222.005(4)[**~~222.005(3)~~**]** and means the Office of Inspector General, Division of Licensing and Regulation, Cabinet for Health and Family Services, 275 East Main Street, Frankfort, Kentucky 40621.

(6) "Case coordination" means the monitoring of a client's progress, including consultation with other service providers and the court**,** to ensure the coordination of a client's services from assessment to completion**[**~~, and which was formerly referred to as case management~~**]**.

(7) "Certification" means the process by which the division recognizes and authorizes a program, assessor, or instructor to provide services to a client convicted of DUI.

(8) "Certified alcohol and drug counselor" is defined **by[**~~in~~**]** KRS 309.080(2).

(9) "Certified assessor" means an individual who has been trained and approved by the division to evaluate the needs of a client and to recommend appropriate services by conducting assessments in a DUI program.

(10) "Certified instructor" means an individual who has been trained and approved by the division to provide education services in a DUI program.

(11) "Certified program" means a public or private entity approved by the division to deliver assessment, education**,** or treatment services to a client convicted of DUI.

(12) "Client" means an individual who receives services in a DUI program.

(13) "Clinical services supervisor" means an individual responsible for monitoring and directing assessment and treatment services and providing consultation and instruction to clinical staff.

(14) "Conflict of interest" means a private relationship exists between a client and a program**[**~~,~~**]** that will result in**:**

(a) A conflict between the program's interests and the interests of the client**;[**~~,~~**] or**

(b) A situation **in which[**~~will be created where~~**]** a program's personal or financial interest conflicts with professional responsibility.

(15) "Court" means the court in which the client was convicted of DUI.

(16) "Courtnet disposition system" means a statewide database maintained by the Kentucky Administrative Office of the Courts that contains criminal conviction data from both state and local law enforcement agencies in Kentucky.

(17) "Detoxification" means a twenty-four (24) hour medical or nonmedical program providing:

(a) Supervised management of physical and psychological withdrawal symptoms from a substance to which an individual has been addicted or abusing; and

(b) An assessment of the individual's need for further care or referral to appropriate resources.

(18) **[**~~"Diagnostic and Statistical Manual of Mental Disorders (DSM)" is published by the American Psychiatric Association and provides a common language and standard criteria for the classification of mental disorders.~~

~~(19)~~**]** "Division" means the Division of Behavioral Health**,** [~~Substance Abuse,~~] Department for Behavioral Health, Developmental and Intellectual Disabilities, [~~Mental Health and Mental Retardation Services,~~] Cabinet for Health and Family Services, 100 Fair Oaks Lane, 4E-D, Frankfort, Kentucky 40621-0001.

(19)[~~(20)~~**]**[~~(19)~~] "DUI" means driving under the influence of alcohol or other drugs in violation of KRS 189A.010.

(20)[~~(21)~~**]**[~~(20)~~] "DUI services" means assessment, education, or treatment services provided to a client convicted pursuant to KRS 189A.010.

(21)[~~(22)~~**]**[~~(21)~~] "Education" means a curriculum approved by the division that provides information about the risks of alcohol and other drugs.

(22)[~~(23)~~**]**[~~(22)~~] "Education agreement" means a written plan outlining what a client referred for education is required to complete to satisfy the program's requirements.

(23)[~~(24)~~**]**[~~(23)~~] "Enrollment" means the act of registering at a certified DUI program and receiving an assessment.

(24)[~~(25)~~**]**[~~(24)~~] "Facility" means the physical area including the grounds and building in which a program delivers services.

(25)[~~(26)~~**]**[~~(25)~~] "Fee agreement" means a written statement of charges to a client for services delivered by a program that specifies the arrangements for payment of the fees.

(26)[~~(27)~~**]**[~~(26)~~] "First offender" means a person who was convicted of a first offense under KRS **189A.010(5)(a)[**~~189A.010(4)(a)~~**]**.

(27)[~~(28)~~**]**[~~(27)~~] "Immediate danger" means a condition in the program which could or has caused death or serious physical injury.

(28)[~~(29)~~**]**[~~(28)~~] "Indigent person" is defined **by[**~~in~~**]** KRS 31.100(3).

(29)[~~(30)~~**]**[~~(29)~~] "Inpatient" means a hospital-based residential service provided postwithdrawal, to an individual with a primary or secondary diagnosis of alcohol or other drug abuse or dependency that is designed to reduce or eliminate alcohol or other drug abuse behavior and dependency.

(30)[~~(31)~~**]**[~~(30)~~] "Intensive outpatient" means a structured comprehensive program of individual and group therapeutic activities delivered in a nonresidential setting, where a client is assisted in recovery from alcohol or other drug abuse on a scheduled and intense basis.

(31)[~~(32)~~**]**[~~(31)~~] "Location code" means a six (6) digit number issued by the United States Department of Health and Human Services, Substance Abuse and Mental Health Services Administration to each of a program's facilities.

(32)[~~(33)~~**]**[~~(32)~~] "Means test" means an objective method used by a program to determine a client's income and resources to evaluate his **or her** ability to pay for services received.

(33)[~~(34)~~**]**[~~(33)~~] "Memorandum of understanding" means a written agreement between two (2) programs that outlines the duties and responsibilities of a program regarding a client referral that remains in effect until one (1) of the programs terminates the agreement in writing.

(34)[~~(35)~~**]**[~~(34)~~] "Multiple offender" means a person who was convicted of a second, third or subsequent offense under KRS 189A.010.

(35)[~~(36)~~][~~(35)~~] "Off the grounds" means a facility is separated from another facility by a public road.

(36)[~~(37)~~][~~(36)~~] "Outpatient" means individual and group therapeutic activities assisting a client in recovery from alcohol or other drug abuse, provided in a nonresidential setting on a scheduled and unscheduled basis.

(37)[~~(38)~~][~~(37)~~] "Plan of correction" means a program's written plan, including the planned correction and a date when a correction will be made, that is submitted to the division by a program if deficiencies are cited by the division in a program review.

(38)[~~(39)~~][~~(38)~~] "Program administrator" means an individual, or the designee of the individual, in charge of the operation of a program who is responsible for the services provided in a program and who has responsibility for determining if a client satisfactorily completes the required services.

(39)[~~(40)~~][~~(39)~~] "Program code" means an alphanumeric identifier that is issued to a program by the division at the time a program is certified.

(40)[~~(41)~~][~~(40)~~] "Progress note" means a written entry in a client's record to document client contacts, the delivery of services, and how the goals of a client's treatment plan are being addressed.

(41)[~~(42)~~][~~(41)~~] "Regional program manager" means an individual responsible for the management of a program's county offices if a program operating statewide has multiple county locations.

(42) "Residential" means a set of organized and intensive individual and group therapeutic activities, provided in a twenty-four (24) hour setting, which assists a client in recovering from alcohol or other drug abuse.

(43)[~~(42)~~] "Residential transitional living" means a therapeutic group setting, **in which:**

(a)[~~where~~] Counseling is provided either on site by staff or off site**;**[~~,~~] and

(b)[~~where~~] A client**:**

1. Resides twenty-four (24) hours a day**;**[~~,~~] and

2. Makes a social and vocational adjustment prior to returning to family or independent living in the community.

(44)[~~(43)~~] [~~"Residential" means a set of organized and intensive individual and group therapeutic activities, provided in a twenty-four (24) hour setting, which assists a client in recovering from alcohol or other drug abuse.~~

~~(45)~~][~~(44)~~] "Revocation" means withdrawal by the division of a program's or an individual's right to deliver services to a client convicted of DUI.

(45)[~~(46)~~][~~(45)~~] "Self-help group" means activities provided in a self-directed peer group setting, for a person recovering from alcohol or other drug abuse or the effects of another person's alcohol or other drug abuse, **in which**[~~where~~] support and direction in achieving or maintaining an alcohol and drug-free lifestyle or in learning to cope with a problem related to another person's alcohol or other drug abuse is provided.

(46)[~~(47)~~][~~(46)~~] "Sliding fee scale" means a program's formula for providing a service to a client at a rate lower than the program's maximum published fee.

(47)[~~(48)~~][~~(47)~~] "Treatment" is defined **by**[~~in~~] KRS **222.005(14)**[~~222.005(13)~~].

(48)[~~(49)~~][~~(48)~~] "Treatment plan" means the written product of the process by which a client and a clinician identify and rank a client's problems needing resolution, establish agreed-upon immediate and long-term specific and measurable goals**,** and decide on a treatment process and the resources to be utilized.

(49)[~~(50)~~][~~(49)~~] "Twenty (20) hour education" means an education curriculum:

(a) For first offenders assessed as low risk, that do not have an alcohol or other drug problem requiring treatment; or

(b) As a supplement to treatment for a first or multiple offender assessed as needing treatment.

(50)[~~(51)~~][~~(50)~~] "Uniform citation" is defined **by**[~~in~~] KRS 431.450.

Section 2. Licensing Requirements. (1) An individual or other entity shall not provide DUI assessment, education**,** or treatment services unless the service is in a program or facility:

(a) Licensed by the cabinet in accordance with 908 KAR 1:370;

(b) Conducted in a licensed federal hospital subject to federal licensure and regulatory requirements pursuant to 38 U.S.C. 301, 38 U.S.C. **1720(a)**[~~1720A~~], 38 U.S.C. 7333, or 38 U.S.C. 7334; or

(c) Conducted on the grounds of a hospital licensed by the cabinet pursuant to 902 KAR 20:160 or 902 KAR 20:180.

(2) A hospital licensed by the cabinet pursuant to 902 KAR 20:160 or 902 KAR 20:180 that operates a DUI program in a facility off the grounds of the hospital shall have the separate facility **in which the**[~~where a~~] DUI program is located licensed by the cabinet in accordance with subsection (1) of this section.

(3) A DUI program established, conducted, and maintained in a jail, prison, or correctional facility shall be licensed by the cabinet in accordance with subsection (1) of this section.

Section 3. Program Certification Requirements. (1) General requirements.

(a) A licensed entity desiring to provide DUI assessment or education services shall be certified by the division as a DUI program before providing a service at any location.

(b) A certified DUI program may deliver assessment, education**,** or treatment services statewide if the program is**:**

1. Licensed in accordance with Section 2 of this administrative regulation**;** and

2. [~~is~~] Certified by the division at each service location.

(c) A program may be certified to provide only assessment or only education services or both assessment and education services at a location.

(d) The division shall not certify a program desiring to provide only education at all locations.

(e) A treatment program or facility licensed by the cabinet to provide treatment pursuant to 902 KAR 20:160, 902 KAR 20:180, or 908 KAR 1:370, an out-of-state treatment facility licensed by the state where the facility is located, or a federally-licensed hospital may provide treatment services to a client referred by a certified DUI program without receiving DUI program certification from the division.

(f) The division shall notify a program, in writing, if certification is issued, renewed**,** or revoked.

(g) The division shall notify the Transportation Cabinet, in writing, if an action is taken to revoke a DUI program's certification or if an action by the division is appealed by a program.

(h) If more than one (1) certified DUI program is operated at the same location, each program shall maintain a separate organizational identity by:

1. Conspicuously posting in a public area:

a. Each program's license;

b. Each program's **DUI** Program Certification Certificate; and

c. A sign showing the name of each program;

2. Using a separate logo or letterhead on written materials;

3. Maintaining client records in a separate and secure cabinet; and

4. Conducting DUI services separate from another DUI program located at the same location.

(i) A certified DUI program shall conspicuously post, in a public area of each facility where DUI services are delivered by the pro-

gram, its license and **DUI** Program Certification Certificate.

(j) A certified DUI program shall:

1. Deliver education and treatment services in a facility that provides at least seven (7) square feet of individual space for a client while **[**~~he is~~**]** receiving a service;

2. Maintain an alcohol and other drug-free work place;

3. Obtain a criminal background check from the Administrative Office of the Court's Courtnet Disposition System for the administrator, and all clinical **or[**~~and~~**]** certified staff, that begin working in the program after **April 12, 2000[**~~the effective date of this administrative regulation~~**]**;

4. Ensure that an owner, program administrator, and all clinical **or[**~~and~~**]** certified staff that begin working in a program after **April 12, 2000[**~~the effective date of this administrative regulation~~**]** have not been released from incarceration or probation or parole for the conviction of a violent crime, hate crime, or sex crime within two (2) years from his **or her** date of employment with the program; and

5. Maintain professional malpractice insurance to cover all clinical **or[**~~and~~**]** certified staff in the minimum amount of $100,000 per occurrence.

(2) Staffing requirements.

(a) General requirements.

1. A program shall have staff certified by the division in accordance with Section 4 of this administrative regulation to deliver assessment and education services.

2. Certified, clinical or administrative staff shall not currently be employed as:

a. A law enforcement officer;

b. A correctional officer, other than in a certified DUI program that is located in a jail, prison or correctional facility;

c. A probation and parole officer;

d. An attorney;

e. An employee of the Administrative Office of the Courts;

f. An employee of the division; or

g. A judge.

(b) Program administrator.

1. A program administrator shall be responsible for the services delivered in a program and knowledgeable of:

a. The requirements established in this administrative regulation, **and** KRS 189A.040 and 189A.045;

b. In a federally assisted program, the requirements for confidentiality established in 908 KAR 1:320; and

c. In a nonfederally assisted program, the requirements for confidentiality established in KRS 222.271(1).

2. A program administrator shall ensure:

a. A program implements and complies with all applicable **administrative** regulations and statutes;

b. Staff having primary responsibility for delivering DUI services, including regional program managers, comply with:

(i) The requirements established in this administrative regulation, **and** KRS 189A.040 and 189A.045;

(ii) In a federally assisted program, the requirements for confidentiality established in 908 KAR 1:320; and

(iii) In a nonfederally assisted program, the requirements for confidentiality established in KRS 222.271(1);

c. An individual involved in the operation of the program or in the delivery of client services engages in ethical practices and abides by the Code of Ethics contained on the Application for **DUI** Program Certification or the Application for **DUI** Program Recertification, whichever is applicable;

d. A program shall not accept a client if a conflict of interest exists between the program and the client;

e. Staff providing assessment and education services are certified by the division and that they complete training required by the division; and

f. Attendance by a client is documented in the client's record.

3. A program administrator shall:

a. Investigate a complaint received from the division and shall, upon request, provide the division with records pertaining to the complaint; **[**~~and~~**]**

b. Personally attend, or have a representative of **the[**~~his~~**]** program attend, at least one (1) statewide DUI meeting annually. The division shall conduct statewide DUI meetings on a semiannual basis**; and[**~~.~~**]**

c. Maintain a written record of quarterly face to face meetings with the clinical services supervisor to document review of the clinical supervision notes.

(c) Clinical services supervisor. There shall be clinical supervision provided at all locations by a clinical services supervisor who meets the requirements established in paragraph (d) or (f) of this subsection.

(d) Except as provided in paragraph (f) of this subsection, the clinical services supervisor shall be:

1. A certified alcohol and drug counselor certified pursuant to KRS 309.080 to 309.089, who has **4,000[**~~4000~~**]** hours of clinical work experience postcertification; or

2. An individual who is licensed or certified as one (1) of the following and who meets the requirements of paragraph (e) of this subsection:

a. Physician licensed under the laws of Kentucky to practice medicine or osteopathy, or a medical officer of the government of the United States while engaged in the performance of official duties;

b. Psychiatrist licensed under the laws of Kentucky to practice medicine or osteopathy, or a medical officer of the government of the United States while engaged in the performance of official duties, who is certified or eligible to apply for certification by the American Board of Psychiatry and Neurology, Inc.;

c. Licensed psychologist licensed to practice psychology by the Kentucky Board of Examiners of Psychology in accordance with KRS 319.050;

d. Certified psychologist with autonomous functioning certified to function without supervision**[**~~,~~**]** in an area specified by the Kentucky Board of Examiners of Psychology in accordance with KRS 319.056;

e. Certified psychologist**[**~~,~~**]** with **6,000[**~~6000~~**]**hours of postcertification practice certified by the Kentucky Board of Examiners of Psychology in accordance with the requirements and limitations established in KRS 319.056;

f. Psychological associate with **6,000[**~~6000~~**]**hours of postcertification practice certified by the Kentucky Board of Examiners of Psychology in accordance with the requirements and limitations established in KRS 319.064;

g. Licensed clinical social worker licensed for the independent practice of clinical social work by the Kentucky Board of Social Work in accordance with KRS 335.100;

h. Certified social worker with **6,000[**~~6000~~**]**hours of postcertification clinical practice in psychiatric social work licensed by the Kentucky Board of Social Work in accordance with KRS 335.080;

i. Registered nurse licensed by the Kentucky Board of Nursing in accordance with KRS Chapter 314 with a masters degree in psychiatric nursing from an accredited college or university and **6,000[**~~6000~~**]**hours of clinical experience in psychiatric nursing;

j. Registered nurse **who:**

(i) Is licensed by the Kentucky Board of Nursing in accordance with KRS Chapter 314 with a bachelor's degree in nursing from an accredited college or university**;**

(ii)[~~who~~**]** Is certified as a psychiatric and mental health nurse

by the American Nurses Association**:** and

(iii)[~~who~~**]** Has **6,000[**~~6000~~**]**hours of clinical experience in psychiatric nursing;

k. Licensed marriage and family therapist licensed by the Kentucky Board of Licensure of Marriage and Family Therapists in accordance with the provisions of KRS **335.330[**~~Chapter 335~~**]**;

l. **Licensed professional clinical counselor licensed [**~~Certified professional counselor certified~~**]** by the Kentucky Board of **Licensed[**~~Certification for~~**]**Professional Counselors in accordance with the provisions of KRS **335.525(1)[**~~Chapter 335~~**]**; or

m. **Licensed[**~~Certified~~**]** professional art therapist **licensed[**~~certified~~**]** by the Kentucky Board of **Licensure[**~~Certification~~**]** for Professional Art Therapists in accordance with the provisions of KRS 309.130.

(e) A certified or licensed professional meeting the requirements established in paragraph (d)2 of this subsection shall have:

1. Completed eighty (80) hours of training in alcohol and other drug abuse counseling, within four (4) years immediately prior to the date of assuming responsibility as a clinical services supervisor in a DUI program or within two (2) years immediately after assuming responsibility as a clinical services supervisor in a DUI program; and

2. **4,000[**~~4000~~**]** hours of work experience in the alcohol and other drug treatment field postdegree.

(f) A person shall qualify as a clinical services supervisor under this administrative regulation if, on **April 12, 2000[**~~the effective date of this administrative regulation~~**]**, the person:

1. Met the requirements for clinical services supervisor as established in 908 KAR 1:050 and 908 KAR 1:190;

2. Had been a clinical services supervisor for at least five (5) years; and

3. Was employed as a clinical services supervisor in a DUI program certified by the division.

(g) A clinical services supervisor shall complete:

1. A division approved twelve (12) hour training in clinical supervision, within six (6) months of assuming responsibility as the clinical services supervisor in a DUI program**[**~~, or within one (1) year of the effective date of this administrative regulation, whichever is later~~**]**; and

2. Twenty (20) hours of training in alcohol and other drug abuse treatment annually.

(h) A clinical services supervisor shall**:**

1. Assist a program administrator in the investigation of a complaint against a program if a complaint concerns an assessment, education, or treatment service;

2.[~~(i)~~**]** Provide clinical supervision to no more than six (6) staff delivering assessment and treatment services to clients convicted of DUI; **and**

3.[~~(i)~~**]** Maintain clinical supervision notes to document each supervisory session including the length of the session, content of the session, all observations of assessment and treatment services**,** and recommendations for improvement of knowledge base and facilitation skills.

(3) Application for program certification.

(a) An individual or other entity seeking DUI program certification shall:

1. Submit a completed Application for **DUI** Program Certification to the division;

2. Submit a Program Survey Form for each location where the applicant desires to provide DUI assessment, education or treatment services and all documentation required by the division; and

3. Sign the application, with his **or her** signature certifying compliance with:

a. The Code of Ethics contained on the Application for **DUI** Program Certification;

b. The requirements established in this administrative regulation, **and** KRS 189A.040, and 189A.045; and

c. The requirements for confidentiality established in:

(i) 908 KAR 1:320 for a federally-assisted program; or

(ii) KRS 222.271(1) for a nonfederally-assisted program.

(b) A Program Survey Form shall be completed for each location:

1. At the time of application for program certification or recertification; or

2. If a program opens a new location.

(c) A Program Survey Form shall contain **the**:

1. Type of services provided;

2. Maximum fee for a service;

3. Name of the curriculum delivered at the location;

4. Name and telephone number of the contact person for the location;

5. Hours of operation when an office is staffed;

6. Address of the office where the client files for the location are maintained and stored;

7. Name and title of each certified staff person providing assessment or education services at the location; and

8. Name of the clinical services supervisor for the location.

(d) The division shall review an application, verify the information**,** and certify a program if the program:

1. Submits a completed Application for **DUI** Program Certification to the division;

2. Is a licensed entity in accordance with Section 2 of this administrative regulation; and

3. Has staff certified by the division to deliver the required services.

(e) The division shall assign a program code and issue a letter and **DUI** Program Certification Certificate if a program is certified. The program code shall be used for verification of program certification on correspondence to the court, the Transportation Cabinet, and the division.

(f) Each program location shall have an additional location code issued by the division that shall be used in conjunction with a program code to identify a program and the exact location where a service is delivered.

(g) Program certification shall be issued by the division for a period of two (2) years, and shall be renewable unless previously revoked.

(h) Program certification shall not be transferred and shall apply to the individual or other entity named in the Application for **DUI** Program Certification or the Application for **DUI** Program Recertification, whichever is applicable, approved by the division.

(i) If there is a change of ownership, the new owner shall apply for program certification in accordance with the requirements established in this subsection.

(4) Application for **DUI** program recertification.

(a) A program administrator shall request program recertification on a completed Application for **DUI** Program Recertification at least thirty (30) calendar days prior to the expiration of **the[**~~his~~**]** program's certification.

(b) If program certification expires, a program administrator shall submit a completed Application for **DUI** Program Recertification within sixty (60) calendar days of the expiration date. The program shall be considered a new applicant if the Application for **DUI** Program Recertification is not made within sixty (60) calendar days of the expiration date.

(c) If program certification lapses for sixty (60) calendar days or more, the division shall notify a program administrator, in writing, that the program is not eligible to deliver DUI services and the pro-

gram shall:

1. Notify active clients in writing;

2. Refer a client and transfer case coordination responsibility of a client's case to a program of **the client's[**~~his~~**]** choice; and

3. Submit to the division a list of active clients with a copy of each client's referral form stating the name of the program to which **each client was[**~~a client is~~**]** referred.

(d) A program administrator shall meet the requirements established in **paragraph (a)[**~~subsection (2)(b)3b~~**]** of this **subsection[**~~section~~**]** before a program is recertified.

(5) Denial of program certification and recertification. The division shall deny a program's application for certification or recertification if:

(a) A program fails to meet certification requirements;

(b) Program certification has been denied or revoked by the division within the last three (3) years;

(c) A current owner, program administrator, clinical services supervisor, or other principal had his **or her** assessor**,** [~~or~~] instructor**,** or program administrator certification revoked by the division within the last three (3) years; or

(d) The division is in the administrative hearing process to revoke the assessor**,** [~~or~~] instructor**,** or program administrator certification of a current owner, program administrator, or clinical services supervisor.

(6) Program changes.

(a) A program administrator shall notify the division and the cabinet, in writing, if there is a change in ownership, program name, or program location.

(b) A program administrator shall notify the division, in writing, on a Report of Change Form if there is a change at a location in:

1. Services delivered;

2. Maximum fee charged for a service;

3. Hours of operation when an office is staffed;

4. Location of client records;

5. Scheduling telephone number;

6. Contact person;

7. Clinical services supervisor; or

8. Other program information printed in the DUI directory.

(7) Records.

(a) General requirements.

1. A program shall designate on a Program Survey Form, at the time of application for program certification, where the client records for each location and the administrative records for the program will be maintained and stored.

2. A program administrator shall notify the division, in writing, on a Report of Change Form, if the program changes the location where client or administrative records are maintained and stored.

3. A program administrator shall ensure that written and electronic client and administrative records are:

a. Stored in a locked cabinet or computer only accessible to authorized staff;

b. Kept confidential:

(i) In a federally assisted program pursuant to 908 KAR 1:320; **or[**~~and~~**]**

(ii) In a nonfederally assisted program pursuant to KRS 222.271(1);

c. Retained for at least five (5) years from the last date of service or action taken; and

d. If destroyed after a five (5) year period of retention, either burned, shredded or deleted electronically in a manner that is unrecoverable.

4. A program shall maintain a record of fees paid by a client.

(b) Administrative records. A program shall maintain administrative records that include:

1. Policy and procedure manual;

2. Copies of curricula, handouts, and videos;

3. Hours of operation for each location;

4. Fee schedule and means test for determining indigency;

5. Cabinet report from most recent licensure inspection;

6. Memoranda of understanding;

7. Copies of the division's certification letters for assessors**,** **[**~~(and)~~**]** instructors, and program administrators on staff;

8. Complaint file; **[**~~and~~**]**

9. Assessment, education, and treatment rosters or sign in sheets; **and**

10. Clinical supervision notes.

(c) Client records.

1. A program shall release a client's record or disclose confidential information about the client in accordance with the client's written permission through a signed authorization for release of information.

2. A program shall release a client's record, with the client's written authorization for release of information, if:

a. The division or its designee **requests[**~~request~~**]**[~~s~~] release of a record; or

b. A client is referred to another program for education or treatment services.

3. A program shall release a client's record upon receipt of a court order.

4. A program shall open a separate written or electronic record for a client at the time of assessment, or upon enrollment in education or admission to treatment, if the client is referred to another program after receiving an assessment.

5. Client records shall include the following forms **developed by the program and** signed by the client:

a. Client rights statement;

b. Client notice of confidentiality and confidentiality agreement;

c. Fee agreement;

d. Authorization for release or disclosure of information; and

e. As applicable, the information required by subparagraphs 6, 7, or 8 of this paragraph.

6. If a client receives an assessment, his **or her** record shall include:

a. The items required by subparagraph 5 of this paragraph;

b. An AOC 494 form (Notice to Attend Alcohol Driver Education Program) or a court order;

c. Uniform citation;

d. Kentucky DUI Assessment Instrument printout;

e. Clinical interview and interview notes;

f. Freedom of choice statement;

g. Confirmation and acceptance of assessment statement;

h. Referral agreement, if applicable;

i. Certificate of enrollment;

j. Case coordination contacts; and

k. Certificate of completion or notice of noncompliance.

7. If a client receives education, his **or her** record shall include:

a. The items required by subparagraph 5 of this paragraph;

b. An education agreement signed by the client; and

c. A record of attendance.

8. If a client receives treatment, his **or her** record shall include:

a. The items required by subparagraph 5 of this paragraph;

b. A treatment plan signed by the client and **the[**~~his~~**]** clinician and treatment plan reviews signed by **the[**~~his~~**]** clinician;

c. Progress notes signed and dated by **the[**~~his~~**]** clinician, recorded after each client contact documenting the type of contact or service provided, and the client's participation; and

d. A discharge summary documenting completion or noncompliance signed and dated by **the[**~~his~~**]** clinician.

(8) Fees.

[~~(a)~~**]** The fee for assessment, education, or treatment shall be established by a program and paid by a client pursuant to KRS 189A.040 in accordance with **this subsection.[**~~the following:~~**]**

(a)[~~(i)~~**]** A fee for assessment shall include all fees associated with screening, intake, clinical interview, client transfers, monitoring of client progress, and all other case coordination activities including exit or discharge interviews**.[**~~;~~**]**

(b)[~~(ii)~~**]** A fee for education shall include only those costs associated with the delivery of **the Prime for Life Risk Reduction Program (PRI) [**~~a~~**]** Twenty (20) Hour Curriculum **[**~~approved by the Division~~**]** including any cost for participant manuals**.[**~~;~~**]**

(c)[~~(iii)~~**]** A fee for treatment shall**:**

1. Include **[**~~only~~**]** those costs involved in delivering individual or group counseling and **[**~~shall also include~~**]** the fee for treatment plan reviews**; and**

2. [~~, but shall~~**]** Not include a separate fee for case coordination activities**.[**~~; and~~**]**

(d)[~~(iv)~~**]** A DUI program shall not charge a fee for group outpatient sessions not attended.

(e)[~~(b)~~**]** The fee schedule published in the DUI directory shall be posted in a public area of each facility visible to a client.

(f)[~~(c)~~**]** The fee a client is charged shall not exceed a program's maximum published fee.

(g)[~~(d)~~**]** A program shall explain the program's fee and payment requirements to the client at the time of **the[**~~his~~**]** assessment or upon enrollment in education or admission to treatment, if the client is referred to another program after receiving an assessment.

(h)[~~(e)~~**]** A program shall not charge a client a fee unless the client has signed a fee agreement.

(i)[~~(f)~~**]** A program's sliding fee scale shall be based on a means test and applied objectively to a client to determine a client's ability to pay.

(j)[~~(g)~~**]** If a client states that he **or she** is an indigent person, a program shall refer **the client[**~~him~~**]** to the court to have an affidavit of indigency executed by the court. A program shall:

1. Accept a client determined indigent by the court; and

2. Deliver services free of charge or for the amount specified by the court.

(9) DUI directory.

(a) The division shall:

1. Publish annually on July 1**[**~~,~~**]** of each year**[**~~,~~**]** a directory of all certified DUI programs; and

2. Issue additions, revisions, and corrections quarterly on October 1, January 1, and April 1, of each year as changes occur.

(b) The directory shall include DUI programs certified to provide DUI assessments and shall be distributed [~~to:~~] upon request to the following:

1. District court judges;

2. Circuit clerks;

3. Certified DUI programs; and

4. The public [~~upon request~~].

(c) The directory shall have a county section that includes:

1. The location of each program having an assessment center in a county;

2. The services provided at each program location;

3. The maximum fee for a service; and

4. Specific terms and conditions related to DUI services that are required by a program.

(d) A program administrator shall report changes for the directory to the division, on a Report of Change Form, at least thirty (30) calendar days prior to the publication dates established in paragraph (a) of this subsection. If the division does not receive a Report of Change Form by the deadline date, the division shall hold a change until the next scheduled publication of the directory.

Section 4. Assessor**,** [~~and~~] Instructor, and Program Administrator Certification Requirements. (1) General requirements.

(a) Only an individual holding valid certification from the division shall provide DUI assessment or education services. An individual certified by the division shall not provide DUI assessment or education services except in a program that is certified by the division.

(b) An individual desiring to provide assessment [~~or~~], program administration**,** or education services shall apply for certification to the division. To be certified, an individual shall:

1. Meet the requirements for certification established in this section; and

2. Complete the training required by subsection (3) of this section.

(c)1. Certification for an assessor, program administrator**,** or instructor shall be for a period of five (5) years from the date of an individual's initial certification as an assessor**, program administrator,** or instructor.

2. An assessor, program administrator**,** or instructor shall renew his **or her** certification in accordance with subsection (4) of this section every five (5) years.

3. Certification that is not renewed or revoked prior to the end of the five (5) year period shall automatically expire at the end of that time period.

(2) Credentials for assessors, program administrators, and instructors.

(a) Assessors. An individual desiring certification as an assessor shall complete twenty (20) hours of training in alcohol and other drug abuse counseling annually and, except as provided in paragraph (c) of this subsection, shall be:

1. A certified alcohol and drug counselor certified pursuant to KRS 309.080 to 309.089;

2. An individual who is licensed or certified as one (1) of the following and who meets the requirements of paragraph (b) of this subsection:

a. Physician licensed under the laws of Kentucky to practice medicine or osteopathy, or a medical officer of the government of the United States while engaged in the performance of official duties;

b. Psychiatrist licensed under the laws of Kentucky to practice medicine or osteopathy, or a medical officer of the government of the United States while engaged in the performance of official duties, who is certified or eligible to apply for certification by the American Board of Psychiatry and Neurology, Inc.;

c. Licensed psychologist licensed to practice psychology by the Kentucky Board of Examiners of Psychology in accordance with KRS 319.050;

d. Certified psychologist with autonomous functioning certified by the Kentucky Board of Examiners of Psychology in accordance with KRS 319.056;

e. Certified psychologist certified by the Kentucky Board of Examiners of Psychology in accordance with KRS 319.056;

f. Psychological associate certified by the Kentucky Board of Examiners of Psychology in accordance with KRS 319.064;

g. Licensed clinical social worker licensed for the independent practice of clinical social work by the Kentucky Board of Social Work in accordance with KRS 335.100;

h. Certified social worker certified by the Kentucky Board of Social Work in accordance with KRS 335.080;

i. Registered nurse licensed by the Kentucky Board of Nursing in accordance with KRS Chapter 314 with a masters degree in nursing from an accredited college or university;

j. Registered nurse licensed by the Kentucky Board of Nursing in accordance with KRS Chapter 314 with one (1) of the following combinations of education and work experience:

(i) Bachelor of science in nursing from a four (4) year program from an accredited college or university and **2,000[**~~2000~~**]** hours of clinical work experience in the substance abuse or mental health field;

(ii) Diploma graduate in nursing from a three (3) year program and **4,000[**~~4000~~**]** hours of clinical work experience in the substance abuse or mental health field; or

(iii) Associate degree in nursing from a two (2) year program from an accredited college or university and **6,000[**~~6000~~**]** hours of clinical work experience in the substance abuse or mental health field;

k. Advanced **practice** registered nurse **[**~~practitioner~~**]** licensed by the Kentucky Board of Nursing in accordance with KRS 314.042;

l. Licensed marriage and family therapist licensed by the Kentucky Board of Licensure of Marriage and Family Therapists in accordance with the provisions of KRS **335.330[**~~Chapter 335~~**]**;

m. **Licensed professional clinical counselor licensed[**~~Certified professional counselor certified~~**]** by the Kentucky Board of **Licensed[**~~Certification for~~**]** Professional Counselors in accordance with the provisions of KRS **335.525(1)[**~~Chapter 335~~**]**; or

n. **Licensed[**~~Certified~~**]** professional art therapist **licensed[**~~certified~~**]** by the Kentucky Board of **Licensure[**~~Certification~~**]** for Professional Art Therapists in accordance with the provisions of KRS 309.130; or

3. An individual who will meet the requirements of a licensed or certified professional established in subparagraph 1 or 2 of this paragraph within three (3) years of the date of his **or her** application for certification as a DUI assessor **[**~~or the effective date of this administrative regulation, whichever is later,~~**]** and who has:

a. A masters degree from an accredited college or university in a program that required completion of a clinical practicum; or

b. A bachelors degree or greater from an accredited college or university, plus one (1) year full-time supervised clinical work experience in the licensed treatment program where the individual is currently employed.

(b) A certified or licensed professional meeting the requirements established in paragraph (a)2 of this subsection shall have completed eighty (80) hours of training in alcohol and other drug abuse counseling, within four (4) years immediately prior to the date of his **or her** application for DUI assessor certification.

(c) A person shall qualify as a DUI assessor under this administrative regulation if, on **April 12, 2000[**~~the effective date of this administrative regulation~~**]**, the person:

1. Met the requirements for a certified DUI assessor established in this administrative regulation as those requirements existed on January 1, 2000;

2. Had been a certified DUI assessor for at least five (5) years; and

3. Was employed as a certified assessor in a DUI program certified by the division.

(d) Instructors. An individual desiring certification as an instructor shall meet one (1) of the following requirements:

1. Have a bachelors degree or greater from an accredited college or university;

2. Have an associate degree from an accredited college or university, with **4,000[**~~4000~~**]** hours of supervised work experience in direct client services in the substance abuse field;

3. Have a high school diploma or a general education development equivalency certificate from a state board of education, with **8,000[**~~8000~~**]** hours of supervised work experience in direct client services in the substance abuse field;

4. Meet the requirements for a certified assessor established in paragraph (a) or (c) of this subsection; or

5. Meet the requirements for a clinical services supervisor established in Section 3(2)(d) or (f) of this administrative regulation.

(e) Program administrator**.[**~~:~~**]** An individual applying for certification as a program administrator shall meet one (1) or more of the following requirements:

1. Have a bachelors degree or greater from an accredited college or university with **2,000[**~~2000~~**]** hours of work experience in the alcohol and other drug treatment field;

2. Have an associate degree from an accredited college or university with **4,000[**~~4000~~**]** hours of supervised work experience in the direct client services in the alcohol and other drug treatment field;

3. Have a high school diploma or a general education development equivalency certificate from a state board of education with **8,000[**~~8000~~**]** hours of supervised work experience in direct client services in the alcohol and other drug treatment field;

4. Meet the requirements for a certified DUI assessor established in paragraph (a) of this subsection; **or**

5. Be an individual who**,** on the effective date of this **administrative** regulation:

a. Had been a program administrator for at least five (5) years; and

b. Was employed as a program administrator in a DUI program certified by the division.

(3) Assessor**,** [~~and~~] instructor, and program administrator certification and recertification training.

(a) General training requirements.

1. Only training approved by the division shall suffice as acceptable training for DUI assessor**,** [~~or~~] instructor, and program administrator certification or recertification.

2. An individual desiring certification or recertification as an assessor**,[**~~or~~**]** instructor, or program administrator shall submit a completed DUI Assessor Certification Application, DUI Assessor Recertification Application, DUI Instructor Certification Application, or DUI Instructor Recertification Application, **DUI Program Administrator Certification Application**, or **DUI** Program Administrator Recertification Application**,** whichever is applicable, to the division no later than the deadline date indicated on the training announcement issued by the division.

3. The application shall be accompanied by a copy of the following:

a. Official transcripts;

b. Diplomas;

c. Certificates;

d. Documentation of certification or licensure; and

e. Documentation of work experience.

4. Assessor**,** [~~or~~] instructor**,** or program administrator certification or recertification shall not be issued by the division until the fee for training is paid in full.

5. If an individual making application for an assessor**,** [~~or~~] instructor**,** or program administrator certification or recertification training fails to meet the established requirements, the division shall deny the application and notify the applicant, in writing, of the reason for the denial.

6. Within thirty (30) calendar days after completion of an assessor**, [**~~or~~**]** instructor**, or program administrator** training, the division shall notify the program and the individual, in writing:

a. That the individual has:

(i) Satisfactorily completed a training;

(ii) Met the requirements for certification or recertification; and

(iii) Been certified or recertified; or

b.(i) Of an observed deficiency as it relates to assessor**,[**~~or~~**]** instructor**, or program administrator** certification; and

(ii) The reason for withholding certification or recertification**.** [~~; and~~

~~(iii) The required corrective plan of action~~.]

(b) Training requirements for assessors. An individual desiring certification as an assessor who has the necessary education and work experience shall **[**~~successfully complete the following requirements~~**]**:

1. Attend and participate in all sessions of an assessor certification training **offered by the division**;

2. Obtain an overall score of eighty (80) percent or better on performance in each of the following areas:

a. A written posttest on general course content;

b. A written posttest on the Kentucky DUI Assessment Instrument; and

c. A demonstration of ability to make an appropriate client referral based on a written case study;

3. Receive a written recommendation from both the trainer and the division representative; and

4. Sign the application, with his **or her** signature certifying compliance with:

a. The Code of Ethics contained on the application; and

b. The requirements established in this administrative regulation.

(c) Training requirements for instructors. An individual desiring certification as an instructor who has the necessary education and work experience shall **[**~~successfully complete the following training requirements~~**]**:

1. Attend and participate in all sessions of a division approved instructor certification training;

2. Complete training [~~in one (1) or more of~~] in the **Prime for Life Risk Reduction Program (PRI) Twenty (20) Hour** Curriculum [~~curricula~~] approved by the division;

3. Obtain a score of eighty (80) percent or better on a written posttest;

4. Demonstrate ability to make an oral presentation of assigned material;

5. Receive a written recommendation from both the trainer and the division representative; and

6. Sign the application, with his **or her** signature certifying compliance with:

a. The Code of Ethics contained on the application; and

b. The requirements established in this administrative regulation.

(d) Training requirements for program administrator certification. An individual applying for initial certification as a program administrator, who has the necessary education and work experience in accordance **with[**~~to~~**]** subsection **(2)(e)[**~~(2) (a)~~**]** of this section, shall **[**~~successfully complete the following requirements~~**]**:

1. Sign **the application, with his or her signature in the Applicant's Statement portion certifying compliance with:**

a. The Code of Ethics contained on the application; and

b. The requirements established in this administrative regulation; and[~~an Applicant's Statement signifying compliance with the requirements contained on the form, which includes a Code of Ethics, contained in the Application for DUI Program Certification, signifying compliance with the requirements in this administrative regulation; and~~**]**

2. Complete six (6) **hours of[**~~hour~~**]** training conducted by the division within one (1) year of signing the Applicant's Statement.

(4) Assessor**,** [~~and~~] instructor**,** and program administrator recertification.

(a) An individual desiring recertification as an assessor shall:

1. Meet the requirements for a DUI assessor established in subsection (2)(a) or (c) of this section, on the date of his **or her** application for assessor recertification; and

2. Submit to the division a DUI Assessor Recertification Application and **the other forms required by subsection (3)(a)3. of this section[**~~other required forms~~**]** by October 1 of the calendar year in which his **or her** certification expires.

(b) An individual desiring recertification as an instructor shall:

1. Meet the requirements for a DUI instructor established in subsection (2)(d) of this section;

2. Submit to the division a DUI Instructor Recertification Application and **the other forms required by subsection (3)(a)3. of this section[**~~all other required forms~~**]** by October 1 of the calendar year in which his **or her** certification expires; and

3. Complete a training authorized by the division.

(c) An individual desiring recertification as a program administrator shall:

1. Meet the education, work experience, and credentialing requirements in accordance with subsection **(2)(e)[**~~(2) paragraph (e)~~**]** of this section; and

2. Submit to the division a completed **DUI** Program Administrator Recertification Application and **the other forms required by subsection (3)(a)3. of this section[**~~all other forms required,~~**]** by October 1**[**~~,~~**]** of the calendar year in which his **or her** certification expires.

(d) If an individual's assessor**,** [~~or~~] instructor**,** or program administrator certification lapses for sixty (60) days [~~one (1) year~~] or more, the individual's application for assessor**,** [~~or~~] instructor**,** or program administrator recertification shall be processed as a new application and the individual shall complete the requirements for initial certification established in subsections (2) and (3) of this section.

(e) If an individual does not meet the requirements for an assessor**,** [~~or~~] instructor**,** or program administrator at the time of his **or her** application for recertification:

1. The division shall deny **the[**~~his~~**]** application for recertification and notify the individual and the program, in writing, of the reason for denial; and

2. The individual's currently held certification shall expire pursuant to subsection (1)(c)3 of this section.

(5) Revocation of assessor**,** [~~and~~] instructor**, or[**~~and~~**]** program administrator certification.

(a) The division shall revoke assessor**,** [~~or~~] instructor**, or[**~~and~~**]** program administrator certification if an individual:

1. Fails to comply with the requirements established in this administrative regulation;

2. Violates the Code of Ethics contained on the application for assessor**,** [~~or~~] instructor**,** or program administrator certification;

3. Is convicted while holding certification from the division of a violent crime, hate crime, or sex crime; [~~or~~]

4. Falsifies information on an application for DUI certification or recertification**;** or

5. Engages in **[**~~inappropriate~~**]** behavior that would lead the division to determine that the safety of a client is threatened.

(b) The revocation of an individual's assessor**,** [~~or~~] instructor**,** or program administrator certification shall be for a period of three (3) years and shall be effective on the date stated in the notice sent to **the[**~~an~~**]** individual assessor**,** **[**~~or~~**]** instructor, **or program administrator** by the division.

Section 5. Certified Program, Assessor**,** **[**~~and~~**]** Instructor**, or Program Administrator** Complaints and Program Monitoring. (1) Complaints.

(a) An individual may submit a complaint related to a certified program, a certified assessor, [~~or~~] a certified instructor, or a program administrator that is not resolved by a program through its grievance procedure to the division.

(b) A program shall be responsive and make an effort to resolve a client's complaint through its grievance procedure.

(c) A complaint shall be submitted to the division, in writing, on a **DUI** Complaint Form or in a letter.

(d) The division shall investigate a complaint, notify the complainant and the program, in writing, of the results of the investigation and take any necessary action.

(e) The division shall notify a professional licensing or certification board, in writing, at the conclusion of an investigation of the results of the investigation if a complaint is related to a violation of a standard established by a professional board **or a statutory violation relating to the board's jurisdiction**.

(2) Program reviews.

(a) The division shall conduct periodic program reviews to determine if a program is in compliance with the requirements established in this administrative regulation, **and** KRS 189A.040 and 189A.045.

(b) A program review shall consist of one (1) or more of the following:

1. An interview with either a program administrator or a clinical services supervisor;

2. Completion of a **Comprehensive DUI** Program Review Form;

3. A review of administrative records;

4. A review of client records **using the Client Record Review form**;

5. Off site monitoring by division staff of assessment [~~completion~~] records submitted by a program;

6. Observation of an assessment, education, or treatment service **using the Assessment Observation Form, Education Observation Form, or Treatment Observation Form, as indicated by the type of service observed**;

7. Client interviews **using the Client Evaluation of Assessment Program, the Client Evaluation of Treatment Program, or the PRI Client's Evaluation of Education Services Received**;

8. The review of other materials necessary to determine compliance with this administrative regulation, **and** KRS 189A.040 and 189A.045; or

9. Physical inspection of a program's facility.

(c) The division shall notify a program, in writing, at least two (2) weeks prior to the date of an announced program review.

(d) A program review may be made at any of a program's locations and may be unannounced.

(e) A program shall:

1. Allow a division representative access to a facility;

2. Provide a copy of records and materials requested; and

3. Allow a division representative to attend and observe an assessment, education class, or treatment session conducted by the program.

(f) The division shall issue a written report of findings and provide a copy of the results of its program review to the program within ninety (90) calendar days after completion of a program review.

(3) Plan of correction.

(a) The division shall require a program that is not in compliance with the requirements established in this administrative regulation, **and** KRS 189A.040 or 189A.045 to submit an acceptable plan of correction to the division within thirty (30) calendar days from the date a program receives a report of findings from the division.

(b) **The plan of correction shall:**

1. Be developed with participation of the program administrator, the clinical services supervisor, and any staff responsible for the implementation of the corrective action for the deficiencies noted in the program review;

2.[~~(c)~~**]** Contain a descriptive plan of action including a time schedule for achieving implementation of the corrective actions for the deficiencies;

3.[~~(d)~~**]** Be accompanied by copies of any forms developed and utilized to bring the program into compliance**, including those forms required by Section 3(7)(c)5. to 8. of this administrative regulation; and**

4.[~~; (e)~~**]** Be signed by the DUI Program Administrator and any staff involved in the development of the plan of correction and for the implementation of the corrective action for the deficiencies**.**

(c)[~~; and (f)~~**]** [~~If a plan of correction is acceptable,~~] [~~t~~] The division may conduct a follow-up program review to ensure:

1. The plan of correction has been implemented; and

2. The program is in compliance with this administrative regulation, **and** KRS 189A.040 and 189A.045.

(d)[~~(c)~~**]** If the division conducts a follow-up program review, a copy of the **Follow-up DUI Program[**~~Site Visit Follow-up Compliance~~**]** Review form shall be issued to the program within ninety (90) calendar days of the completion of the follow-up program review.

(e)[~~(d)~~**]** If a plan of correction [~~is not acceptable,~~] has not been implemented, the division shall take action to revoke program certification.

(4) Voluntary closure.

(a) A program desiring to close voluntarily shall:

1. Notify the division, in writing, that it will voluntarily surrender its program certification by mailing to the division its **DUI** Program Certification Certificate;

2. Stop accepting client referrals;

3. Notify active clients in writing;

4. Refer a client and transfer case coordination responsibility of a client's case to a program of his **or her** choice; and

5. Submit to the division, within ten (10) calendar days of the notification made under subparagraph 1 of this paragraph, a list of active clients and a copy of the following information for each client:

a. Name, address and telephone number;

b. Date of birth and either the client's Social Security or driver's license number;

c. DUI conviction number;

d. Date of assessment and referral information including level of care and agency to which a client is referred;

e. Number of sessions completed;

f. Date of last attendance; and

g. Reason for noncompliance if a client is noncompliant.

(b)1. A program that voluntarily surrenders its certification in compliance with the requirements established in paragraph (a) of this subsection may reapply for program certification at any time.

2. The division shall revoke the program certification of a program that voluntarily surrenders its certification if the program fails to comply with the requirements established in paragraph (a) of this subsection. The revocation shall be in accordance with the requirements established in subsection **(5)(d)[**~~(5)(c)~~**]** of this section.

3. If a program voluntarily surrenders its certification following an action by the division to revoke the program's certification, revocation shall be in accordance with subsection **(5)(d)[**~~(5)(c)~~**]** of this section.

(5) Revocation of program certification.

(a) The division shall revoke the certification of a program that

is not in compliance with the requirements established in this administrative regulation, **and** KRS 189A.040 or 189A.045.

(b) The division shall immediately revoke a program's certification if it determines there is an immediate danger to clients.

(c) The division shall revoke the certification of a program that has failed to implement the plan of correction submitted to the division as a result of a program review.**[;]**

(d) The revocation of program certification shall be:

1. For a period of three (3) years; and

2. Effective on the date stated in the notice sent to the program by the division.

(e)[~~(d)~~**]** If the division revokes program certification, a program shall:

1. Stop providing DUI services;

2. Stop accepting client referrals;

3. Notify active clients in writing;

4. Refer a client and transfer case coordination responsibility of a client's case to a program of his **or her** choice; and

5. Submit to the division, within ten (10) calendar days of the notification from the division, a list of active clients and a copy of the following information for each client:

a. Name, address and telephone number;

b. Date of birth and either the client's Social Security or driver's license number;

c. DUI conviction number;

d. Date of assessment and referral information including level of care and the name of the program to which a client is referred;

e. Number of sessions completed;

f. Date of last attendance; and

g. Reason for noncompliance if a client is noncompliant.

Section 6. Assessment Requirements. (1) Assessment process.

(a)1. Except as provided in subparagraph 2 of this paragraph, a program providing assessment services shall administer the Kentucky DUI Assessment Instrument to a client receiving a DUI assessment. A program may use supplemental assessments in addition to the Kentucky DUI Assessment Instrument.

2. A program shall have six (6) months from the **2011** effective date of this administrative regulation to comply with the requirement that the **PC-based or online** Kentucky DUI Assessment Instrument **[**~~shall~~**]** be administered in every DUI assessment. During this six (6) month transitional period, a program shall**:**

a. Meet the requirements for a DUI assessment established in this administrative regulation; and

b. Enter all new assessment records via the Internet.[~~meet the requirements for a DUI assessment established in:~~

~~a. This administrative regulation as those requirements existed on January 1, 2000; or~~

~~b. Subparagraph 1 of this paragraph.~~**]**

3. For users of the PC-based Kentucky DUI Assessment Instrument**,[**~~:~~**]** the Kentucky DUI Assessment Instrument records and the completion and **noncompliance[**~~non-compliance~~**]** reports **shall be[**~~are~~**]** electronically downloaded and sent either on removable computer media, or via email to the division, or its designee**,** on a monthly basis. Written notification shall be sent to the division or its designee, in lieu of electronic records **if[**~~in the event that no~~**]** records or reports are **not** available for download.**[**~~;~~**]**

4. For users of the Web-based Kentucky DUI Assessment Instrument**,[**~~:~~**]** new assessment records **shall be[**~~are~~**]** entered via the internet within three (3) business days of the assessment. Completion and **noncompliance[**~~non-compliance~~**]** information shall be entered within three (3) business days of a client's completion or **noncompliance[**~~non-compliance~~**].**

(b) The Kentucky DUI Assessment Instrument printout generated at a client's assessment shall:

1. Be signed and dated by the assessor and client;

2. Contain comments by the assessor explaining the referral decision; and

3. Be placed in the client's file at least thirty (30) calendar days after the client's assessment.

(c) An assessment shall be conducted:

1. At a program's certified location; or

2. If a court orders an assessment of an individual that is incarcerated, in a jail or a prison.

(d) A DUI assessment shall be conducted in person, and shall include:

1. Administration of the Kentucky DUI Assessment Instrument;

2. A private face-to-face clinical interview conducted by a certified DUI assessor, using [~~either~~] the assessor's own clinical interview [~~or the structured interview provided in the Kentucky DUI Assessment Instrument,~~] with the findings of the interview recorded on the check list provided in the Kentucky DUI Assessment Instrument;

3. Consideration of referral options and the client's resources that are documented in the Kentucky DUI Assessment Instrument;

4. A determination of the severity of the client's problem;

5. Referral to a program of the client's choice that offers a service at the level of care appropriate to the severity of the client's problem; and

6. The cosigning by the client and assessor of the following forms **developed by the program**:

a. Fee agreement;

b. Client rights statement;

c. Confidentiality statement;

d. Freedom of choice statement and a referral agreement;

e. Confirmation that a client received an assessment statement;

f. Authorization for release of information;

g. Certificate of enrollment; and

h. Kentucky DUI Assessment Instrument printout.

(e)1. Except as provided in subparagraph 2 of this paragraph, a DUI assessment shall be conducted by an assessor holding valid certification from the division.

2. The screening instrument portion of the Kentucky DUI Assessment Instrument shall be either self-administered via a hard copy of the paper and pencil version of the AUDIT/DAST or administered by a certified or noncertified individual.

(f) The screening instrument portion of the Kentucky DUI Assessment Instrument shall be administered individually or in a group.

(g) A program shall maintain a Roster of Assessments that includes:

1. Client name, date of birth and Social Security or driver's license number;

2. Assessment date; and

3. Type of referral and referral program.

(h) A certified DUI assessor shall demonstrate knowledge, skills, and competence in the following essential clinical areas:

1. **Classifying mental or substance abuse disorders using the Diagnostic and Statistical Manual of Mental Disorders published by the American Psychiatric Association;[**~~DSM or other accepted criteria for substance abuse disorders;~~**]**

2. Progression and characteristic of substance abuse disorder;

3. Range of life areas to be assessed and the effects of substance use on those areas;

4. Continuum of care, the available range of treatment modalities, and referral resources;

5. Administration and interpretation of screening instruments;

6. Assessment of a **client's[**~~clients~~**]** readiness and motivation to take responsibility and address substance abuse issues; and

7. Communication of recommendations to the client and accurate documentation of the referral process.

(2) Client referrals. A DUI program shall accept a client referral from another program or a court.

(a) Court referral of DUI offenders.

1. An individual convicted of DUI in Kentucky shall obtain an assessment at a certified program of his choice **or her** listed in a directory published by the division **in accordance with Section 3(9) of this administrative regulation**.

2. Before accepting a client for an assessment, a program shall:

a. Obtain an AOC 494 form or a court order; or

b. Document the client's file to show the reason one (1) of these forms could not be obtained.

3. If a client has received an assessment for **a[**~~his~~**]** conviction at another DUI program, a program shall not conduct a subsequent assessment for the client without obtaining a new court order.

(b) Program referral of DUI offenders.

1. A program desiring to make or receive a client referral shall execute a written Memorandum of Understanding with the in-state or out-of-state programs**[**~~,~~**]** with which it will make or receive referrals.

2. A memorandum of understanding shall include **the**:

a. Name of both programs;

b. Date it is executed;

c. Duties and responsibilities of each program to include the requirements for case coordination contacts between the programs;

d. Purpose of the agreement;

e. Terms for termination of the agreement; and

f. Signatures of each program's program administrator.

3. A program may refuse a client referral because of:

a. Inadequate staff;

b. Lack of an appropriate service;

c. A client waiting list; or

d. A program's previous unsuccessful attempt to treat a client.

4. A program shall not accept a client referral from another program without first obtaining a copy of the client's assessment and other available records pertinent to the client's assessment, education, or treatment.

5. A program shall inform a client at the time of **the[**~~his~~**]** assessment that if **the client[**~~he~~**]**fails to disclose all **[**~~of his~~**]** outstanding DUI convictions, the services **the client[**~~he~~**]** receives will not meet the requirements for reinstatement of **a[**~~his~~**]** driver's license.

6. A program shall refer a client to a program of the client's choice, at an appropriate level of care based on the client's assessment. A program shall have a client sign a referral agreement stating **the client[**~~he~~**]** has been given freedom of choice in the selection of a program.

7. A program shall:

a. Allow a client freedom of choice in the selection of a program **in which the client[**~~where he~~**]** will receive education or treatment services; and

b. Not allow a client to select the level of care or type of service, which shall be based on the results of **the client's[**~~his~~**]** assessment and the availability of services.

8. A program shall transfer a client's assessment results and the referral form generated by the Kentucky DUI Assessment Instrument to a program of the client's choice offering service at the level of care needed by the client.

(3) Case coordination requirements.

(a) **[**~~General requirements.~~

~~1.~~**]** A program that conducts a client's assessment shall be responsible for case coordination whether the client receives education or treatment services at the program that conducted **the[**~~his~~**]** assessment or at another program.

(b)[~~2~~**]**. To determine if a client is compliant or noncompliant, case coordination shall be conducted and include:

1.[~~a.~~**]** Having regular contact with the program receiving a client referral to determine a client's compliance with the recommended education or treatment;

2.[~~b.~~**]** Documentation in an assessment record of actions and contacts related to follow up on a client;

3.[~~c.~~**]** Sending a certificate of enrollment to the court after a client is assessed pursuant to KRS 189A.045;

4.[~~d.~~**]** Providing information on a client's progress to the court upon request;

5.[~~e.~~**]** Notifying the circuit clerk of the court within three (3) working days after making a determination or receiving notice that a client is noncompliant of the need to schedule a show-cause hearing;

6.[~~f.~~**]** Sending a completion report to the Transportation Cabinet and the court within three (3) working days after making a determination or receiving notice that a client is compliant;

7.[~~g.~~**]** Providing a certificate of completion to a client **who[**~~if he~~**]** satisfactorily completes the required services; and

8.[~~h.~~**]** Sending completed Kentucky DUI Assessment Instrument records on a monthly basis to the Division or its designee on removable computer media or via online submission.[~~Downloading on a computer diskette Kentucky DUI Assessment Instrument records and completion and noncompliance reports and sending the diskette on a monthly basis to the division or its designee.~~]

(c)[~~3.~~**]** A program administrator shall notify the court within three (3) working days of the date specified in the client's fee agreement, if a client fails to pay for an assessment within the time stated in **the[**~~his~~**]** fee agreement.

Section 7. Additional client considerations. (1) Out of State Clients and Program**.[**~~:~~**]**

(a) A[~~(1) Any~~**]** non-Kentucky licensee convicted of DUI in Kentucky may attend an out of state program without referral. Notification to or approval by the division **shall not be[**~~is not~~**]** required. The client **shall bear[**~~bears~~**]** the burden of demonstrating to the satisfaction of the court and Kentucky Transportation Cabinet that the **out of state[**~~out-of-state~~**]** program:

1.[~~(a)~~**]** Is licensed or otherwise authorized to provide DUI services;

2.[~~(b)~~**]** Complies at a minimum**[**~~,~~**]** with the **requirements[**~~requirement~~**]** of this administrative regulation; and

3.[~~(c)~~**]** Satisfies the requirements of KRS **Chapter** 189A.

(b) If[~~(2) When~~**]** a client receives an assessment from the Kentucky Certified DUI Program and chooses education or treatment services in another state, the Kentucky Certified DUI Program shall**:[**~~;~~**]**

1.[~~(a)~~**]** Locate an **out of state[**~~out-of-state~~**]** program;

2.[~~(b)~~**]** Contact the out of state program to arrange **the** client's enrollment;

3.[~~(c)~~**]** Send the program receiving the referral a DUI Referral Report Form and a Case Coordination Form**, which are part of the Kentucky DUI Assessment Instrument**; and

4.[~~(d)~~**]** Provide case coordination.

(c)[~~(3)~~**]** A Kentucky licensed driver and resident convicted of DUI pursuant to KRS **189A.010(1)(a) through (f) shall[**~~189A.010 (a)-(f) must~~**]** receive a DUI assessment in Kentucky. Referral to an out of state program may be allowed if the program is licensed to

provide services at the level of care necessary to satisfy Kentucky's requirements.

(d) If[~~(4) When~~**]** a non-Kentucky licensee with an out of state conviction attends a Kentucky Certified DUI Program, compliance reporting and case coordination shall be in accordance with the requirements of the convicting state.[~~(b) Out-of-state clients and programs.~~

~~1. A program administrator shall notify the state of conviction, in writing, on an Interstate Transfer Form, if a client that is satisfying a DUI conviction from another state enrolls in a certified DUI program.~~

~~2. A Kentucky licensed driver or an individual who is not a Kentucky licensed driver convicted of DUI pursuant to KRS 189A.010(a) through (d) may be referred by a program after a DUI assessment to an out-of-state program for education or treatment if the program is licensed to provide services at the level of care necessary to satisfy his DUI in Kentucky. The referring program shall provide case coordination for the client.~~

~~3. A Kentucky licensed driver or an individual who is not a Kentucky licensed driver convicted of DUI pursuant to KRS 189A.010(a) through (d), who has not received an assessment in Kentucky, may receive assessment, education, or treatment services at an out-of-state program if he first receives approval from the division. The division shall:~~

~~a. Approve the out-of-state program if the program:~~

~~(i) Is licensed or certified by the state in which it is located;~~

~~(ii) Provides assessments; and~~

~~(iii) Offers alcohol and other drug education or treatment services; and~~

~~b. Provide case coordination for the client.~~]

(2)[~~(c)~~**]** Clients with special needs.

(a)[~~1.~~**]** If a client is identified as having a special need at the time of **[**~~his~~**]** assessment**,** a program shall provide services either directly or through referral according to the following:

1.[~~a.~~**]** Questions and instructions shall be read orally to a client who is unable to read and responses shall be recorded for a client who is unable to write;

2.[~~b.~~**]** A qualified interpreter shall be provided for a deaf client;

3.[~~c.~~**]** Reasonable accommodations shall be made for a client who is unable to communicate in English; and

4.[~~d.~~**]** A pregnant client shall be referred for prenatal care.

(b)[~~2.~~**]** A program shall document in a client's record special needs services the client receives.

(c)[~~3.~~**]** Responsibility for payment of a special need service shall be according to the following:

1.[~~a.~~**]** A program shall be responsible for payment of interpreter services pursuant to KRS 30A.415; and

2.[~~b.~~**]** A client shall be responsible for payment of other services required because of a special need pursuant to KRS 189A.040.

(d)[~~4.~~**]** A program shall comply with the rules of confidentiality established in:

1.[~~a.~~**]** 908 KAR 1:320 if providing interpreter services to a client in a federally-assisted program; or

2.[~~b.~~**]** KRS 222.271(1) if providing interpreter services to a client in a nonfederally-assisted program.

(3)[~~(d)~~**]** A client that receives treatment before an assessment. If a client receives treatment after being charged with DUI, without first receiving an assessment, a program shall:

(a)[~~1.~~**]** Obtain a copy of a court order from the court and a copy of the client's uniform citation;

(b)[~~2.~~**]** Conduct an assessment and case coordination in accordance with **Section 6(1) and (3) of this administrative regulation[**~~subsections (1) and (3) of this section~~**]**; and

(c)[~~3.~~**]** Give the client credit for treatment **[**~~he~~**]** received since his **or her** DUI arrest if it can be documented that the treatment was at the level of care needed by the client based on the assessment conducted pursuant to **paragraph (b)[**~~subparagraph 2~~**]** of this **subsection[**~~paragraph~~**]**.

(4)[~~(e)~~**]** A client with multiple DUI convictions. If a client presents for an assessment with multiple unresolved DUI convictions, a program shall:

(a)[~~1.~~**]** Obtain a copy of the client's uniform citation and an AOC 494 form or court order for each conviction;

(b)[~~2.~~**]** Conduct one (1) assessment and case coordination in accordance with **Section 6(1) and (3) of this administrative regulation[**~~subsections (1) and (3) of this section~~**]**;

(c)[~~3.~~**]** Refer the client to treatment at a level of care appropriate to satisfy the client's clinical needs and all of **the client's[**~~his~~**]** DUI convictions; and

(d)[~~4.~~**]** Complete a separate completion report for each of the client's convictions.

(5)[~~(f)~~**]** A client convicted of DUI while enrolled in a program. If a client receives a subsequent conviction for DUI while enrolled in an education or treatment program, a program shall:

(a)[~~1.~~**]** Obtain a copy of the client's uniform citation and an AOC 494 form or court order for the subsequent conviction;

(b)[~~2.~~**]** Conduct another assessment and case coordination in accordance with **Section 6(1) and (3) of this administrative regulation[**~~subsections (1) and (3) of this section~~**]**;

(c)[~~3.~~**]** Refer the client to a level of care appropriate to satisfy the client's clinical needs and all of **the client's[**~~his~~**]** DUI convictions;

(d)[~~4.~~**]** Document the client's file to show that the client's admission to treatment began at the time **the client[**~~he~~**]**was reassessed; and

(e)[~~5.~~**]** Complete a separate completion report for each of the client's convictions. [~~(g) Reenrollment of a client. If a client requests reenrollment after he stops attending education or treatment, a program shall:~~

~~1. Reenroll the client and allow him to resume the education or treatment service at the point where he last attended if he has not been reported noncompliant to the court; or~~

~~2. Refer the client back to the court for a new court order before conducting a new assessment and starting the education or treatment service over if he has been reported as noncompliant to the court.~~]

(6)[~~(g)~~**]** Prior services received by a client**.[**~~:~~**]** If a client requests services after being reported **noncompliant[**~~non-compliant~~**]**, a program shall:

(a)[~~1.~~**]** Refer **the[**~~a~~**]** client back to the court for a new court order;

(b)[~~2.~~**]** Conduct a DUI assessment; and

(c)[~~3.~~**]** Give the client credit for prior services if it can be documented that:

1.[~~(i)~~**]** The services were at the level of care indicated by the assessment;

2.[~~(ii)~~**]** The services were received within the last six (6) months; and

3.[~~(iii)~~**]** The client is progressing in accordance with the completion requirements.

(7)[~~(h)~~**]** Early release of a second offender. If the program responsible for a client's case coordination determines a second offender, who has completed at least six (6) months of the treatment that was recommended based on the client's assessment, has completed a program prior to the end of the one (1) year period ordered by the court, the administrator of the program shall send a written report notifying the court that the client has completed the program.

(8)[~~(i)~~] A client under twenty-one (21) years of age. If a client is under twenty-one (21) years of age, a program shall deliver services:

(a)[~~1.~~] In accordance with the requirements established in this administrative regulation if the client is convicted of DUI pursuant to KRS 189A.010(1)(a) through (d); or

(b)[~~2.~~] In accordance with a court order, not subject to the requirements established in this administrative regulation, if the client is convicted pursuant to KRS 189A.010(1)(e).

(9)[~~(j)~~] Early release of a first offender referred to treatment. A first offender referred to treatment may be deemed appropriate for release prior to the expiration of the ninety (90) day requirement **if the offender:**[~~in accordance with the following:~~]

(a)[~~1.~~] Has achieved all goals and objectives stated in the treatment plan;

(b)[~~2.~~] Has completed a minimum of two (2) months in treatment;

(c)[~~3.~~] Has received the recommendation of the assessor providing case coordination; and

(d)[~~4.~~] Has met all completion requirements.

(10)[~~(k)~~] Clients under the influence of alcohol or other drugs**.**[~~:~~] If a client presents for services under the influence of alcohol or other drugs:

(a)[~~1.~~] The DUI program staff shall protect the safety and welfare of all clients by arranging for the impaired client's removal from the facility;

(b)[~~2.~~] The DUI program administrator or the clinical services supervisor shall contact the case coordinator; and

(c)[~~3.~~] The case coordinator shall re-evaluate the level of care appropriate to address the client's problem.

Section **8.**[~~7.~~] Education Requirements. (1) Approved curricula.

[~~(a)~~] A DUI program desiring to provide education services shall ensure that:

(a)[~~1.~~] The education delivered within the program is the twenty (20) hour curriculum approved by the division, the PRIME for Life Risk Reduction Program (PRI) **Twenty (20) Hour Curriculum**; [~~That, except as provided in paragraph (c) of this subsection, within six (6) months of the effective date of this administrative regulation, the education delivered within the program is one (1) of the following twenty (20) hour curricula approved by the division:~~

~~a. Kentucky Alcohol and Other Drugs Education Program (KAODEP) Twenty (20) Hour; and~~

~~b. Prime for Life Risk Reduction Program (PRI) Twenty (20) Hour; and~~]

(b)[~~2.~~] Instruction is provided in person by an instructor holding valid DUI instructor certification from the division for the particular education session to be delivered; [~~and~~]

(c)[~~3.~~] A certified instructor delivers a curriculum in accordance with the curriculum delivery standards established by subsection (2) of this section and **was** taught at a DUI instructor certification training conducted by the [~~division or~~] Prevention Research Institute, Inc.**;**

(d)[~~4.~~] A certified DUI instructor demonstrates knowledge, communication, and facilitation skills as evidenced by:

1.[~~a.~~] Delivery of key supporting points of the curriculum;

2.[~~b.~~] Exhibiting skill in processing curriculum and participant journal activities;

3.[~~c.~~] Exhibiting fluency with curriculum content;

4.[~~d.~~] Ability to maintain class focus on subject of session;

5.[~~e.~~] Ability to engage each participant in discussions;

6.[~~f.~~] Ability to manage client defense and resistance;

7.[~~g.~~] Exhibiting sensitivity to individual client learning styles; and

8. Communicating[~~h. Communicate~~] a belief in the accuracy and importance of the curriculum**; and**[~~.~~]

(e)[~~5.~~] A certified DUI instructor who is observed to lack the necessary skills outlined in **paragraph (d) of this subsection receives**[~~subsection (1)(a)4 of this section shall receive~~] additional instructor development to elevate his or her skill level to the extent necessary to perform as required by **paragraph (d) of this subsection**[~~subsection (1)(a)4 of this section~~]**.**

[~~(b)~~] [~~A DUI program may provide either or both of the twenty (20) hour curricula at a certified location.~~

~~(c)~~] [~~During the six (6) month transitional period established by paragraph (a)1 of this subsection, a program shall meet the requirements for a twenty (20) hour curriculum established in:~~

~~1. This administrative regulation as those requirements existed on January 1, 2000; or~~

~~2. Paragraph (a)1 of this subsection.~~]

(2) Delivery standards.

(a) The twenty (20) hour curriculum shall:

1. Be for a first offender assessed as needing only education or as a supplement to treatment if delivered to a first or multiple offender assessed as needing treatment;

2. Consist of twenty (20) hours of instruction and group interaction that increases a client's awareness and knowledge about the risks of alcohol and other drug use and helps develop skills to change a client's attitude and behavior in relation to alcohol and other drug abuse; and

3. Be delivered no more than:

a. Three (3) hours per day; and

b. Three (3) times per week.

(b) A program may enroll first offenders and multiple offenders in the same session.

(c) A program administrator shall ensure **that**:

1. There are no more than twenty (20) [~~twenty-five (25)~~] and no less than two (2) clients in a session;

2. A curriculum is delivered in accordance with the delivery standards established in this subsection;

3. Required manuals for a curriculum are distributed to and used by a client;

4. A client is given the manual for [~~his~~] personal use after completion of an education service;

5. Videos required in a curriculum are shown to a client; [~~and~~]

6. Supplemental videos and speakers that are not approved as part of a curriculum are not used for an education service**; and**[~~.~~]

7. Evaluation of DUI educational classes are completed by the participants and submitted to the division at the conclusion of each twenty (20) hour education course.

(3) Documentation and completion requirements for education sessions.

(a) A program shall maintain a sign-in sheet for an education session that includes **the**:

1. Name of the curriculum;

2. Title and number of the session;

3. Date, time, location, and name of the instructor; and

4. Client name and signature.

(b) A program shall require a client to:

1. Attend and participate in each session of a curriculum;

2.a. If the client is a first offender, attend each session of the curriculum in any order; or

b. If the client is a multiple offender, except as provided by paragraph (c) of this subsection, attend sessions in sequence beginning with chapter 1;

3. Comply with a program's rules of conduct; and

4. Pay required fees.

(c) If a client who is a multiple offender cannot attend a ses-

sion, due to an emergency, a program shall allow the client to attend a session out of sequence the next time the chapter is presented by a program. Documentation of the emergency shall be maintained in the client's file.

(d) If a client is receiving education at a program other than the program **from which the assessment was received[**~~where he received his assessment~~**]**, the program administrator shall notify the individual responsible for the client's case coordination if the client:

1. Demonstrates a need for service at a different level of care;

2. Satisfactorily completes education; or

3. Is noncompliant.

(e) If a client is receiving education at the program **from which the assessment was received[**~~where he received his assessment~~**]**, the program administrator shall:

1. Determine if the client has satisfactorily completed the DUI education service; and

2. Report compliance or noncompliance in accordance with Section 6(3)(a)2 of this administrative regulation.

(f) A program administrator shall ensure that a client's record contains documentation showing compliance with the requirements established in this subsection.

Section **9.[**~~8.~~**]** Treatment Requirements. (1) General requirements.

(a) A DUI program desiring to provide treatment services shall:

1. Comply with the licensing requirements established in Section 2 of this administrative regulation; [~~and~~]

2. Employ treatment staff who meet the requirements established in 908 KAR 1:370, Section 8; and

3. Ensure that all treatment staff have knowledge, skill, and abilities demonstrating competence as evidenced by;

a. Communicating in a non-judgmental and respectful attitude toward clients;

b. Engaging clients in the treatment process;

c. Ability to facilitate group interaction;

d. Demonstrating knowledge of substance abuse related life issues;

e. Demonstrating knowledge of the signs and symptoms of relapse;

f. Utilizing techniques to assist clients in meeting goals;

g. Ability to deal effectively with resistance;

h. Ability to address individual client differences and needs;

i. Demonstrating knowledge of the physical and psychological complications of alcohol and other drug abuse; and

j. Demonstrating the ability to develop treatment plans and document progress notes in accordance with the standards established in subsection (2) of this section.[~~2. Employ qualified staff that have training and experience in dealing with the physical and psychological complications of alcohol and other drug abuse;~~]

(b) A program shall ensure that the treatment a client receives is based on **that client's[**~~his~~**]** assessment. A client may be referred to outpatient, intensive outpatient, inpatient, residential, residential transitional living, or detoxification treatment services in a licensed treatment program in state or out of state pursuant to the requirements established in this administrative regulation.

(c) A program shall deliver treatment services in person according to the **requirements established in this paragraph.[**~~following:~~**]**

1. A client shall receive individual or group treatment**.[**~~;~~**]**

2. A treatment group may include first and multiple offenders in the same session**.[**~~;~~**]**

3. A sign in sheet shall be maintained which contains the date and location of the services and the signature of each client in attendance.

4. [~~3~~] The maximum number of clients in a treatment group shall not exceed fifteen (15)**.[**~~;~~**]**

5. [~~4~~] A client may be referred to a self-help group to supplement but not to replace treatment services**.[**~~;~~**]**

6. [~~5~~] A client referred to outpatient treatment shall receive at least one (1) hour of individual or one and one-half (1 1/2) hours of group treatment each week**.[**~~;~~**]**

7. [~~6~~] A client referred to intensive outpatient treatment shall receive at least six (6) hours of treatment over a period of two (2) or more days weekly in a program licensed for intensive outpatient treatment**.[**~~;~~**]**

8. [~~7~~] If a client receives treatment less often than the requirements established in subparagraphs **6 and 7[**~~5 and 6~~**]** of this paragraph, to meet his **or her** individual clinical needs, a clinical rationale shall be documented in the client's record**.[**~~; and~~**]**

9. [~~8~~] A client referred for inpatient or residential treatment shall receive this treatment in a program licensed for inpatient or residential treatment.

(2) Treatment plan.

(a) A clinician or treatment planning team shall be responsible for developing a treatment plan for a client accepted for treatment services by the client's fourth session.

(b) A treatment plan shall:

1. Be developed with a client's participation and be individualized for the needs of the client;

2. Include a written statement of the client's problem with alcohol and other drugs and any other problem that contributes to or is related to the client's use of alcohol and other drugs;

3. Include a written statement of treatment goals and measurable objectives with a time schedule for achieving the goals and a written statement of whether the client agrees with the treatment plan;

4. Be signed by the client and the clinician if there is a change documented in the client's treatment plan; and

~~5. Be reviewed by the clinician and the client at least once every 180 calendar days or if there is a change documented in the client's treatment plan.~~

5. Be reviewed and signed by the clinician at least every:

a. Forty-five (45) calendar days for a first offender attending treatment;

b. 180 days for a multiple offender attending treatment; **or**

c. Thirty (30) days for a client receiving intensive outpatient treatment**[**~~; or~~

~~d. If there is a change documented in the client's treatment plan, be reviewed and signed by the clinician and the client~~**]**.

(c) A client's progress toward meeting the goals stated in **the[**~~his~~**]** treatment plan shall be documented in the client's record by a clinician at least weekly.

(d) If the twenty (20) hour education curriculum is delivered as a supplement to treatment to a first or multiple offender assessed as needing treatment, it shall be included in a client's treatment plan.

(3) Completion requirements.

(a) To complete a treatment service, a client shall:

1. Comply with all attendance requirements;

2. Achieve the goals stated in **the[**~~his~~**]** treatment plan;

3. Comply with a program's rules of conduct; and

4. Pay required fees.

(b) If a client is receiving treatment at a program other than the program **from which the assessment was received[**~~where he received his assessment~~**]**, the program administrator of the treatment program shall notify the individual responsible for the client's case coordination if a client:

1. Demonstrates a need for service at a different level of care;

2. Satisfactorily completes treatment; or

3. Is noncompliant.

(c) If a client is receiving treatment at the program **from which the assessment was received[**~~where he received his assessment~~**]**, the program administrator shall be responsible for:

1. Final approval that the client has satisfactorily completed a treatment service; and

2. Reporting compliance or noncompliance in accordance with Section 6(3)(a)2 of this administrative regulation.

(d) A program administrator shall ensure that a client's record contains documentation showing compliance with the requirements established in this subsection.

Section **10.[**~~9.~~**]** Administrative Hearing Requirements. (1) If the division takes action to deny**[**~~,~~**]** or revoke**[**~~,~~**]** a DUI program's certification or an individual's assessor**,** [~~or~~] instructor, or program administrator certification, the division shall**:**

(a) Notify the program or individual assessor**,** [~~or~~] instructor, or program administrator in writing**; [**~~,~~**]**

(b) State[~~stating~~] a reason for the adverse action**;** and

(c) Notify[~~notifying~~] the program or individual assessor**,** [~~or~~] instructor, or program administrator of the right to appeal the action pursuant to KRS Chapter 13B.

(2) A program or individual assessor or instructor shall appeal a negative certification action taken by the division by notifying the division, in writing, postmarked within twenty (20) calendar days from the date of notice of action from the division.

(3) Upon receipt of an appeal, the secretary or **the secretary's[**~~his~~**]** designee shall give notice of the hearing to a program or an individual assessor**,** [~~or~~] instructor, or program administrator**,** in writing, not less than twenty (20) calendar days in advance of the date set for the hearing and the notice shall be sent in accordance with KRS Chapter 13B.

(4) The secretary, or **the secretary's[**~~his~~**]** designee, shall appoint a hearing officer to conduct a hearing and the hearing shall be conducted pursuant to KRS Chapter 13B.

(5) The division shall retain all records related to a hearing for a period of at least five (5) years.

Section **11.[**~~10.~~**]** Incorporation by Reference. (1) The following material is incorporated by reference:

(a) "Application for DUI Program Certification", October 2011;

(b) "Application for DUI Program Recertification", October 2011;

(c) "Assessment Observation Form", October 2011;

(d) "Client Evaluation of Assessment Program", October 2011;

(e) "Client Evaluation of Treatment Program", October 2011;

(f) "Client Record Review", October 2011;

(g) "Comprehensive DUI Program Review Form", October 2011;

(h) "DUI Complaint Form", October 2011;

(i) "DUI Assessor Certification Application", October 2011;

(j) "DUI Assessor Recertification Application", October 2011;

(k) "DUI Program Certification Certificate", October 2011;

(l) "DUI Instructor Certification Application", October 2011;

(m) "DUI Instructor Recertification Application", October 2011;

(n) "DUI Program Administrator Certification Application", October 2011;

(o) "DUI Program Administrator Recertification Application", October 2011;

(p) "Education Observation Form", October 2011;

(q) "Follow-up DUI Program Review", October 2011;

(r) "PRI Client's Evaluation of Education Services Received", October 2011;

(s) "Program Survey Form", October 2011;

(t) "Report of Change Form", October 2011;

(u) "Treatment Observation Form", October 2011;

(v) AOC-494, "Notice to Attend Alcohol Driver Education Program", May 1996;

(w) "Memorandum of Understanding", October 1, 1998;

(x) "Roster of Assessments", October 1, 1998;

(y) "Kentucky DUI Assessment Instrument", October 2011; and

(z) "Prime for Life Risk Reduction Program (PRI) Twenty (20) Hour Curriculum", February 1, 2005.[~~(a) AOC-494 form (Rev. 5-96) Notice to Attend Alcohol Driver Education Program (revised 5/96);~~]

[~~(a)~~**]** [~~(b)~~] **[**~~Application for DUI Program Certification Form, DUI Form 01~~] [~~(revised 3/2000)~~]**[**~~;~~

~~(b)~~**]** [~~(c)~~] **[**~~Application for DUI Program Recertification Form, DUI Form 02~~] [~~06 (revised 3/2000)~~]**[**~~;~~

~~(c)~~**]** [~~(d)~~] **[**~~Assessment Observation Form, DUI Form 03;~~**]** [~~Complaint Form DUI Form 05 (revised 10/01/98);~~]

[~~(d)~~**]** [~~(e)~~] **[**~~Client Evaluation of Assessment Program, DUI Form 04;~~**]** [~~DUI Assessor Certification Application DUI Form 10 (revised 3/2000);~~]

[~~(e)~~**]** [~~(f)~~] **[**~~Client Evaluation of Treatment Program, DUI Form 05;~~**]** [~~DUI Assessor Recertification Application DUI Form 11 (revised 3/2000);~~]

[~~(f)~~**]** [~~(g)~~] **[**~~Client Record Review, DUI Form 06;~~**]** [~~Instructor Certification Application DUI Form 12 (revised 3/2000);~~]

[~~(g)~~**]** [~~(h)~~] **[**~~Comprehensive DUI Program Review Form, DUI Form 07;~~**]** [~~DUI Instructor Recertification Application DUI Form 13 (revised 3/2000);~~]

[~~(h) DUI Complaint Form, DUI Form 08;~~

~~(i) DUI Assessor Certification Application, DUI Form 09;~~**]** [~~Interstate Transfer Form DUI Form 08 (10/01/98);~~]

[~~(j) DUI Assessor Recertification Application, DUI Form 10;~~**]** [~~DUI Kentucky Alcohol and Other Drugs Education Program (KAODEP) Twenty (20) Hour (1998);~~]

[~~(k) DUI Program Certification Certificate, DUI Form 11;~~**]** [~~Kentucky DUI Assessment Instrument (10/01/98);~~]

[~~(l) DUI Instructor Certification Application, DUI Form 12;~~**]** [~~Memorandum of Understanding DUI Form 07 (revised 10/01/98);~~]

[~~(m) DUI Instructor Recertification Application, DUI Form 13;~~**]** [~~Prime For Life Risk Reduction Program (PRI) Twenty (20) Hour (1998);~~]

[~~(n) DUI Program Administrator Certification Application, DUI Form 14;~~**]** [~~Program Certification Certificate DUI Form 15 (10/01/98);~~]

[~~(o) DUI Program Administrator Recertification Application, DUI Form 15;~~**]** [~~Program Review Form DUI Form 04 (revised 3/2000);~~]

[~~(p) Education Observation Form, DUI Form 16;~~**]** [~~Program Survey Form DUI Form 02 (revised 10/01/98);~~]

[~~(q) Follow-up DUI Program Review Form, DUI Form 17;~~**]** [~~Report of Change Form DUI Form 03 (revised 10/01/98);~~]

[~~(r) PRI Client's Evaluation of Education Services Received; DUI Form 18;~~**]** [~~Roster of Assessments DUI Form 09 (10/01/98);~~]

[~~(s) Program Survey Form, DUI Form 19;~~**]** [~~Site Visit Follow-up Compliance Review Form DUI Form 14 (revised 3/2000)~~]

[~~(t) Report of Change Form, DUI Form 20; and~~

~~(u) Treatment Observation Form, DUI 21.~~**]**

(2) This material may be inspected, copied, or obtained**, subject to applicable copyright laws,** at the Department for Behavioral Health, Developmental and Intellectual Disabilities [~~Mental Health and Mental Retardation Services~~], Division of Behavioral Health [~~Substance Abuse~~], 100 Fair Oaks Lane, Leestown Square,

4th Floor, Frankfort, Kentucky 40601, Monday through Friday, 8 a.m. to 4:30 p.m.

STEPHEN HALL, Commissioner
JANIE MILLER, Secretary

APPROVED BY AGENCY: July 13, 2011

FILED WITH LRC: July 14, 2011 at noon

CONTACT PERSON: Jill Brown, Cabinet for Health and Family Services, Office of Legal Services, 275 East Main Street 5 W-B, Frankfort, Kentucky 40601, phone (502) 564-7905, fax (502) 564-7573.

CABINET FOR HEALTH AND FAMILY SERVICES
Department for Community Based Services
Division of Protection and Permanency
(As Amended at ARRS, October 11, 2011)

922 KAR 1:490. Background checks for foster and adoptive parents, caretaker relatives, kinship caregivers, and reporting requirements.

RELATES TO: KRS 17.500-17.580, 199.011(7), 199.462(1), 600.020(55), (56) [~~600.020(54), (55)~~], 605.090(1)(b), (6), 605.120, 605.130, 620.050(5), Chapter 625, 45 C.F.R. 1356.30, 42 U.S.C. 671(a)(20)

STATUTORY AUTHORITY: KRS 194A.050(1), 199.462(4), 199.640(5), 605.120(5), (6), 605.130(4), 605.150

NECESSITY, FUNCTION, AND CONFORMITY: KRS 194A.050(1) requires the secretary to promulgate administrative regulations necessary to implement programs mandated by federal law, qualify for the receipt of federal funds, and necessary to cooperate with other state and federal agencies for the proper administration of the cabinet and its program. KRS 199.462(4) requires the cabinet to promulgate an administrative regulation for the purpose of requiring a criminal background investigation on behalf of a foster or adoptive parent applicant, an adult member of the applicant's household, and a caretaker relative. KRS 605.150 authorizes the cabinet to promulgate administrative regulations to implement the provisions of KRS Chapter 605, including:

(1) KRS 605.120(5) and (6) by which the cabinet is authorized to establish a program for kinship care; and

(2) KRS 605.130(4) by which the cabinet shall perform such other services as may be deemed necessary for the protection of children. KRS 199.640(5) authorizes the cabinet to promulgate administrative regulations establishing basic standards of care and service for child-placing agencies relating to the health and safety of all children in the care of the agency. This administrative regulation establishes background check requirements for caretaker relatives, kinship caregivers, or applicants seeking to provide foster or adoptive services. Additionally, this administrative regulation imposes a stricter requirement than the federal mandate because the cabinet requires the denial of an applicant if: (1) a criminal record check conducted on behalf of an adult household member reveals physical abuse, battery, or a drug or alcohol-related felony within the previous five (5) year period or a felony involving a spouse, a child, sexual violence, or death; or (2) a child abuse or neglect check conducted by the cabinet reveals that a household member, twelve (12) years of age or older, committed sexual abuse or sexual exploitation of a child, has been responsible for a child fatality related to abuse or neglect, or has had parental rights terminated involuntarily.

Section 1. Definitions. (1) "Address check" means a search of the Sex Offender Registry to determine if an address is a known address of a registered sex offender.

(2) "Adolescent member of the household" means a youth who:

(a) Resides in the home of:

1. An individual who applies for approval or has been approved to provide foster or adoptive services; or

2. A caretaker relative or kinship caregiver;

(b) Is age twelve (12) through age seventeen (17); and

(c) Is not placed in the home by a state agency.

(3) [~~(2)~~] "Adult member of the household" means an adult who:

(a) Resides in the home of:

1. An individual who applies for approval or has been approved to provide foster or adoptive services; or

2. A caretaker relative or kinship caregiver; and

(b) Is eighteen (18) years of age or older.

(4) [~~(3)~~] "Applicant" means an individual who applies for approval as a foster or adoptive parent of a child in the custody of the state under:

(a) 922 KAR 1:350, Family Preparation; or

(b) 922 KAR 1:310, Standards for Child-Placing Agencies.

(5) [~~(4)~~] "Caretaker relative" means a relative:

(a) With whom the child is, or shall be, placed by the cabinet; and

(b) Who is seeking to qualify as a kinship caregiver in accordance with 922 KAR 1:130.

(6) [~~(5)~~] "Child-placing agency" is defined by KRS 199.011(7).

(7) "Kinship caregiver" means the qualified caretaker relative of a child with whom the child is placed by the cabinet as alternative to foster care in accordance with 922 KAR 1:130.

(8) "Sex Offender Registry" means the registration system for adults who have committed sex crimes or crimes against minors established in accordance with KRS 17.500 through 17.580.

(9) [~~(6)~~] "Sexual abuse" is defined by KRS 600.020(55) [~~600.020(54)~~].

(10) [~~(7)~~] "Sexual exploitation" is defined by KRS 600.020(56) [~~600.020(55)~~].

Section 2. Background Checks Required for Foster or Adoptive Parent Applicants. (1) An applicant, and each adult member of the household, shall complete a DPP-157, Background Checks for Applicants or Foster/Adoptive Parents, and submit to:

(a) An in-state criminal records check, conducted pursuant to KRS 199.462(1), by the:

1. Kentucky Justice and Public Safety Cabinet; or

2. Administrative Office of the Courts;

(b) A child abuse or neglect check conducted by the cabinet for each state of residence during the past five (5) years; [~~and~~]

(c) A criminal records check conducted by means of a fingerprint check of the National Crime Information Database; and

(d) An address check of the Sex Offender Registry.

(2) Prior to approval of an applicant, each adolescent member of the household shall complete a DPP-157 and submit to a child abuse or neglect check conducted by the cabinet.

(3) A Kentucky child abuse or neglect check conducted by the cabinet shall identify the name of each applicant, adolescent member of the household, or adult member of the household who has been found by the cabinet to have:

(a) Committed sexual abuse or sexual exploitation of a child;

(b) Been responsible for a child fatality related to abuse or neglect;

(c) Abused or neglected a child within the seven (7) year period immediately prior to the application; or

(d) Had parental rights terminated.

(4) An applicant shall not be approved if:

(a) A criminal records check reveals that the applicant, or adult member of the household, has **a**[~~a~~]:

1. **Felony**[~~A felony~~] conviction involving:

a. A spouse, a child, sexual violence, or death as described by 42 U.S.C. 671(a)(20); or

b. Physical abuse, battery, a drug, or alcohol within the five (5) year period prior to application;

2. Criminal conviction relating to child abuse or neglect; or

3. Civil judicial determination related to child abuse or neglect; [~~or~~]

(b) A child abuse or neglect check reveals that the applicant, adolescent member of the household, or adult member of the household, has been found to have:

1. Committed sexual abuse or sexual exploitation of a child;

2. Been responsible for a child fatality related to abuse or neglect; or

3. Had parental rights terminated involuntarily in accordance

with KRS 625.050 through 625.120 or another state's laws; or

(c) An address check of the Sex Offender Registry and supporting documentation confirm that a sex offender resides at the applicant's home address.

Section 3. Procedure for Requesting a Cabinet Child Abuse or Neglect Check, a Criminal Record Check, and an Address Check of the Sex Offender Registry. Prior to approval of an applicant, a child-placing agency shall request a child abuse or neglect check, a criminal records check, and an address check of the Sex Offender Registry by submitting to the cabinet:

(1) A completed form, DPP-157 [~~, Child Abuse or Neglect Check~~]; and

(2) Documentation required to request a child abuse or neglect check from the child welfare agency in each previous state of residence, if the applicant or adult household member has resided outside of the state of Kentucky in the previous five (5) years.

Section 4. Request for a Child Abuse or Neglect Check from Another State.

(1) The cabinet shall conduct a child abuse or neglect check as required by 42 U.S.C. 671(a)(20) when a:

(a) Completed DPP-157 or DPP-159, Background Checks for Caretaker Relatives or Kinship Caregivers, is submitted to the cabinet; or

(b) Request is received on agency letterhead and includes two (2) numeric identifiers.

(2) The cabinet shall:

(a) Protect the confidentiality of the information transmitted by the cabinet to a child welfare agency; and

(b) Waive the requirements specified in 922 KAR 1:470, Section 3(4).

Section 5. Background Checks Required for a Caretaker Relative.

(1) A caretaker relative, and each adult member of the household, shall complete a DPP-159 and submit to:

(a) An in-state criminal records check, conducted pursuant to KRS 199.462(1) and in accordance with 922 KAR 1:130, by the:

1. Kentucky Justice and Public Safety Cabinet; or

2. Administrative Office of the Courts; [~~and~~]

(b) A child abuse or neglect check conducted by the cabinet;

(c) An address check of the Sex Offender Registry; and

(d) A criminal records check conducted by means of a fingerprint check of the National Crime Information Database if the caretaker relative has lived outside the state of Kentucky during the past five (5) years.

(2) An adolescent member of a caretaker relative's household shall complete a DPP-159 and submit to a child abuse or neglect check conducted by the cabinet in accordance with 922 KAR 1:130.

(3) A child abuse and neglect check conducted by the cabinet in accordance with subsection (1)(b) or (2) of this section shall include any finding consistent with Section 2(3) of this administrative regulation.

(4) A caretaker relative shall not be approved if an in-state criminal records check, a [~~or~~] child abuse and neglect check, or an address check of the Sex Offender Registry reveals a finding consistent with Section 2(4) of this administrative regulation.

Section 6. Approval.

(1) Except for the provisions of Section 2(4) or 5(4) of this administrative regulation, approval of an applicant or caretaker relative who has been convicted of a nonviolent felony or misdemeanor, has been found by the cabinet or another child welfare agency to have abused or neglected a child, or whose parental rights have been terminated voluntarily, shall be handled on a case-by-case basis with consideration given to the:

(a) Nature of the offense;

(b) Length of time that has elapsed since the event; and

(c) Applicant's life experiences during the ensuing period of time.

(2) Except for the provisions of Section 2(4) or 5(4) of this administrative regulation, an applicant or caretaker relative may be approved on a case-by-case basis in accordance with the criteria described by subsection (1)(a) through (c) of this section if:

(a) An adolescent member of the household has:

1. Been found by the cabinet to have abused or neglected a child;

2. Had parental rights terminated voluntarily in accordance with KRS 625.040 through 625.046 or another state's laws; or

(b) An adult member of the household has [~~been~~]:

1. Been convicted of a nonviolent felony or misdemeanor;

2. Been found to have abused or neglected a child; or

3. Had parental rights terminated voluntarily in accordance with KRS 625.040 through 625.046 or another state's laws.

Section 7. Reevaluation. (1) An approved foster or adoptive parent and each adult member of the household shall submit annually, prior to or during the anniversary month of initial approval, to [~~a~~]:

(a) A criminal records check as described in Section 2(1)(a) of this administrative regulation; [~~and~~]

(b) A child abuse or neglect check conducted by the cabinet; and

(c) An address check of the Sex Offender Registry.

(2)(a) If an adult becomes a new member of an approved foster or adoptive parent's household, the new adult member of the household shall submit to background checks within thirty (30) calendar days of residence within the household in accordance with Section 2(1)(a) through (d) [~~(c)~~] of this administrative regulation.

(b) If an adult becomes a new member of a kinship caregiver's [~~an approved caretaker relative's~~] household, the new adult member of the household shall submit to background checks within thirty (30) calendar days of residence within the household in accordance with Section 5(1) of this administrative regulation.

(3) If an adolescent becomes a new member of an approved foster or adoptive parent or a kinship caregiver's [~~caretaker relative's~~] household, the new adolescent member of the household shall submit to a child abuse and neglect check conducted by the cabinet within thirty (30) calendar days of residence within the household in accordance with Section 2(2) or 5(2) of this administrative regulation.

(4) An annual address check of the Sex Offender Registry shall be completed for a kinship caregiver's eligibility redetermination in accordance with 922 KAR 1:130, Section 13(2).

(5) If an annual address check indicates a match with the Sex Offender Registry, a **report[~~referral~~]** of abuse, neglect, or dependency shall be made in accordance with 922 KAR 1:330.

Section 8. Maintenance of Records. (1) A completed copy of each criminal records check conducted pursuant to Section 2(1) or 7(1) of this administrative regulation and the DPP-157 shall be maintained on behalf of each:

(a) Applicant;

(b) Foster or adoptive parent; and

(c) [~~(b)~~] Adult member of an applicant or foster or adoptive parent's [~~the applicant's~~] household.

(2) A completed copy of each DPP-157 submitted pursuant to Section 2(2) or 7(3) of this administrative regulation shall be maintained on behalf of each adolescent member of [~~the~~]:

(a) An applicant's household; or

(b) A foster or adoptive parent's [~~Caretaker relative's~~] household.

(3) A completed copy of the DPP-159 [~~DPP-157~~] and criminal records check conducted pursuant to Section 5 or 7(4) of this administrative regulation shall be maintained for each:

(a) [~~1.~~] Caretaker relative; [~~and~~]

(b) [~~2.~~] Kinship caregiver; and

(c) Adult member of a [~~the~~] caretaker relative or kinship caregiver's [~~relative's~~] household.

(4) A completed copy of the DPP-159 submitted pursuant to Section 5(2) or 7(3) of this administrative regulation shall be maintained on behalf of each adolescent household member of a:

(a) Caretaker relative; or

(b) Kinship caregiver.

Section 9. Incorporation by Reference. (1) The following material is incorporated by reference:

(a) "DPP-157, Background Checks for Applicants or Foster/Adoptive Parents [~~Child Abuse or Neglect Check~~]", edition **10/11[**~~09/11~~**]** [~~02/08 is incorporated by reference~~]; and

(b) "DPP-159, Background Checks for Caretaker Relatives or Kinship Caregivers", edition **10/11[**~~09/11~~**].**

(2) This material may be inspected, copied, or obtained, subject to applicable copyright law, at the Cabinet for Health and Family Services, 275 East Main Street, Frankfort, Kentucky 40621, Monday through Friday, 8 a.m. to 4:30 p.m.

PATRICIA R. WILSON, Commissioner
JANIE MILLER, Secretary

APPROVED BY AGENCY: August 5, 2011

FILED WITH LRC: August 8, 2011 at 11 a.m.

CONTACT PERSON: Jill Brown, Office of Legal Services, 275 East Main Street 5 W-B, Frankfort, Kentucky 40601, phone (502) 564-7905, fax (502) 564-7573.

ADMINISTRATIVE REGULATIONS AMENDED AFTER PUBLIC HEARING OR RECEIPT OF WRITTEN COMMENTS

GENERAL GOVERNMENT CABINET
Kentucky Real Estate Appraisers Board
(Amended After Comments)

201 KAR 30:310. Fees for registration of appraisal management companies.

RELATES TO: KRS 324A.152(4)(b), (7), 324A.154(1)
STATUTORY AUTHORITY: KRS 324A.152(8), 324A.154(1)
NECESSITY, FUNCTION, AND CONFORMITY: KRS 324A.154(1) requires the board to establish by administrative regulation the fees for registration of appraisal management companies. This administrative regulation establishes the fees for registration of appraisal management companies and renewal of the registration.

Section 1. Fee schedule. (1) The initial application fee shall be $3,500.
(2) An annual renewal fee shall be $3,500.
(3) A reinstatement fee shall be $3,500 in addition to the penalty provided for in KRS 324A.152(7).
(4) Any dishonored or returned check shall incur the cost of collection plus twenty-five (25) dollars. **[**~~(5) An Appraisal Subcommittee annual fee of twenty-five (25) dollars each year for each Kentucky licensed and certified appraiser listed on the company register.~~**]**

HAROLD G. BRANTLEY, Chair
APPROVED BY AGENCY: September 22, 2011
FILED WITH LRC: October 14, 2011 at 9 a.m.
CONTACT PERSON: Larry Disney, Executive Director, Kentucky Board of Real Estate Appraisers, 135 W. Irvine Street, Suite 301, Richmond, Kentucky 40475, phone (859) 623-1658, fax (859) 623-2598.

REGULATORY IMPACT ANALYSIS AND TIERING STATEMENT

Contact Person: Larry Disney
(1) Provide a brief summary of:
(a) What this administrative regulation does: This administrative regulation establishes the fees for application for registration as an appraisal management company.
(b) The necessity of this administrative regulation: This administrative is necessary to set the fees for licensure.
(c) How this administrative regulation conforms to the content of the authorizing statutes: KRS 321A.154(1) requires the board to promulgate administrative regulations establishing reasonable fees for the registration of appraisal management companies. This administrative regulation establishes those fees.
(d) How this administrative regulation currently assists or will assist in the effective administration of the statutes: This administrative regulation informs the applicants of the fees required for registration with the board.
(2) If this is an amendment to an existing administrative regulation, provide a brief summary of:
(a) How the amendment will change this existing administrative regulation: This is a new administrative regulation.
(b) The necessity of the amendment to this administrative regulation: This is a new administrative regulation.
(c) How the amendment conforms to the content of the authorizing statutes: This is a new administrative regulation.
(d) How the amendment will assist in the effective administration of the statutes: This is a new administrative regulation.
(3) List the type and number of individuals, businesses, organizations, or state and local governments affected by this administrative regulation: The Board does not know the number of person who will seek registration from the board at this time. Generally, states with similar characteristics to Kentucky have fifty to seventy-five applicants.
(4) Provide an analysis of how the entities identified in question (3) will be impacted by either the implementation of this administrative regulation, if new, or by the change, if it is an amendment, including:
(a) List the actions that each of the regulated entities identified in question (3) will have to take to comply with this administrative regulation or amendment: This administrative regulation requires applicants to pay the fee for registration by the board.
(b) In complying with this administrative regulation or amendment, how much will it cost each of the entities identified in question (3): The fees are set forth in the regulation.
(c) As a result of compliance, what benefits will accrue to the entities identified in question (3): Applicants for licensure will have their applications reviewed by the board.
(5) Provide an estimate of how much it will cost the administrative body to implement this administrative regulation:
(a) Initially: The 2011 General Assembly passed HB 288 which provides for registration of appraisal management companies for the first time. Although it cannot identify costs with exactitude, the board will be expending funds for overhead, staff, and equipment.
(b) On a continuing basis: The 2011 General Assembly passed HB 288 which provides for registration of appraisal management companies for the first time. Although it cannot identify costs with exactitude, the board will be expending funds for overhead, staff, and equipment.
(6) What is the source of the funding to be used for the implementation and enforcement of this administrative regulation: The board's operation is funded by fees paid by the licensees and applicants.
(7) Provide an assessment of whether an increase in fees or funding will be necessary to implement this administrative regulation, if new, or by the change if it is an amendment: No increase in fees will be necessary to implement this administrative regulation.
(8) State whether or not this administrative regulation established any fees or directly or indirectly increased any fees: This administrative regulation does directly establish fees.
(9) TIERING: Is tiering applied? No.

FISCAL NOTE ON STATE OR LOCAL GOVERNMENT

1. Does this administrative regulation relate to any program, service, or requirements of a state or local government (including cities, counties, fire departments, or school districts)? Yes
2. What units, parts or divisions of state or local government (including cities, counties, fire departments, or school districts) will be impacted by this administrative regulation? Kentucky Real Estate Appraisers Board.
3. Identify each state or federal statute or federal regulation that requires or authorizes the action taken by the administrative regulation. KRS 324A.154(1).
4. Estimate the effect of this administrative regulation on the expenditures and revenues of a state or local government agency (including cities, counties, fire departments, or school districts) for the first full year the administrative regulation is to be in effect. None
(a) How much revenue will this administrative regulation generate for the state or local government (including cities, counties, fire departments, or school districts) for the first year? None
(b) How much revenue will this administrative regulation generate for the state or local government (including cities, counties, fire departments, or school districts) for subsequent years? None
(c) How much will it cost to administer this program for the first year? None
(d) How much will it cost to administer this program for subsequent years? None
Note: If specific dollar estimates cannot be determined, provide a brief narrative to explain the fiscal impact of the administrative regulation.
Revenues (+/-):
Expenditures (+/-):
Other Explanation:

GENERAL GOVERNMENT CABINET
Kentucky Real Estate Appraisers Board
(New Administrative Regulation)

201 KAR 30:360. Operation of an appraisal management company.

RELATES TO: KRS 324A.150 - 324A.164
STATUTORY AUTHORITY: KRS 324A.152(8)
NECESSITY, FUNCTION, AND CONFORMITY: KRS 324A.154(2) requires the board to establish by administrative regulation rules governing the operation of an appraisal management company. This administrative regulation establishes requirements for operating an appraisal management company.

Section 1. Performance Obligation. (1) A registrant shall disclose to its client the actual fees paid to an appraiser for appraisal services, separately from any other fees or charges for appraisal management services and, upon written request, shall make that information available to the Board.

(2) A registrant shall disclose to each appraiser that it engages for appraisal services verification of its State Registration.

(3) A registrant shall not attempt to directly or indirectly coerce an appraiser to accept an assignment if the appraiser indicates that **the appraiser** **[**~~he/she~~**]** lacks competency or sufficient experience to complete the assignment and the registrant shall not penalize the appraiser by reducing the number of assignments made to that appraiser, refusing to pay fees owed or otherwise.

(4) A registrant shall not provide an appraiser with or request that an appraiser reach an anticipated, estimated, encouraged or desired value for a subject property or a proposed or target amount to be loaned to the borrower, except that a copy of the sales contract for purchase transaction may be provided.

(5) A registrant shall not withhold or threaten to withhold future business or assignments from an appraiser because of the appraiser's failure to concede to improper or illegal requests, demands or coercion. This prohibition shall include any express or implicit promise of future business, assignments, promotions, or increased compensation for an appraiser in exchange for the appraiser's agreement to concede to improper or illegal requests, demands or coercion.

(6) A registrant shall not require an appraiser to sign an indemnification agreement **[**~~that would require the appraiser to defend and hold harmless the registrant or any of its agents or employees for any liability, damage, losses, or claims arising out of the services performed by the registrant or its agents, employees, or independent contractors~~**]**.

(7) A registrant shall not use an appraiser directly selected or referred by any member of a loan production staff of a client.

(8) A registrant shall not request that a broker price opinion be used as the primary basis for developing and reporting an appraisal for the purpose of loan origination of a residential mortgage loan secured by any one (1) to four (4) unit residential property.

(9) A registrant shall not participate in any other act or practice that impairs or attempts to impair an appraiser's independence, objectivity, or impartiality.

(10) A registrant may not remove an appraiser from its appraiser panel without prior written notice to the appraiser. An appraiser may file a complaint with the Kentucky Real Estate Appraisers Board to review the decision of the registrant for removal from its appraiser panel for reasons other than those allowed by KRS 324A158(2)(d).

(11) A registrant shall require that if an appraisal report prepared by a Kentucky licensed or certified real property appraiser is reviewed by a state licensed or certified real property appraiser, the review appraiser shall also be certified by the Kentucky Real Estate Appraisers Board.

(12) A registrant shall not prohibit communication between a Kentucky licensed or certified real property appraiser and any person from whom the appraiser believes the information is relevant in the performance of an appraisal assignment.

(13) A registrant shall not require a Kentucky licensed or certified **[**~~residential~~**]** real property appraiser **that is an independent contractor under Kentucky law** to sign a noncompete agreement **[**~~that violates Kentucky law~~**]**. **[**~~(14) A registrant may not permit an employee, agent, or third party to engage in any activity, which the registrant is prohibited from engaging in directly.~~**]**

HAROLD G. BRANTLEY, Chair
APPROVED BY AGENCY: September 22, 2011
FILED WITH LRC: October 14, 2011 at 9 a.m.
CONTACT PERSON: Larry Disney, Executive Director, Kentucky Board of Real Estate Appraisers, 135 W. Irvine Street, Suite 301, Richmond, Kentucky 40475, phone (859) 623-1658, fax (859) 623-2598.

REGULATORY IMPACT ANALYSIS AND TIERING STATEMENT

Contact Person: Larry Disney
(1) Provide a brief summary of:
(a) What this administrative regulation does: This administrative regulation establishes the requirements for the operation of an appraisal management company.
(b) The necessity of this administrative regulation: This administrative is necessary to set standards for the operation of an appraisal management company.
(c) How this administrative regulation conforms to the content of the authorizing statutes: KRS 321A.154(2) requires the board to promulgate administrative regulations establishing standards for the operation of an appraisal management company.
(d) How this administrative regulation currently assists or will assist in the effective administration of the statutes: This administrative regulation informs the appraisal management company of the standards required in their operation.
(2) If this is an amendment to an existing administrative regulation, provide a brief summary of:
(a) How the amendment will change this existing administrative regulation: This is a new administrative regulation.
(b) The necessity of the amendment to this administrative regulation: This is a new administrative regulation.
(c) How the amendment conforms to the content of the authorizing statutes: This is a new administrative regulation.
(d) How the amendment will assist in the effective administration of the statutes: This is a new administrative regulation.
(3) List the type and number of individuals, businesses, organizations, or state and local
governments affected by this administrative regulation: The Board does not know the number of person who will seek registration from the board at this time. Generally, states with similar characteristics to Kentucky have fifty to seventy-five registrants.
(4) Provide an analysis of how the entities identified in question (3) will be impacted by either
the implementation of this administrative regulation, if new, or by the change, if it is an amendment, including:
(a) List the actions that each of the regulated entities identified in question (3) will have to take to comply with this administrative regulation or amendment: This administrative regulation requires AMCs to comply with the standards set forth in this regulation.
(b) In complying with this administrative regulation or amendment, how much will it cost each of the entities identified in question (3): The costs will vary depending upon the efficiency of the company.
(c) As a result of compliance, what benefits will accrue to the entities identified in
question (3): Registrants will know the requirements for operation.
(5) Provide an estimate of how much it will cost the administrative body to implement this administrative regulation:
(a) Initially: The 2011 General Assembly passed HB 288 which provides for registration of appraisal management companies for the first time. Although it cannot identify costs with exactitude, the board will be expending funds for overhead, staff, and equipment.
(b) On a continuing basis: The 2011 General Assembly passed HB 288 which provides for registration of appraisal management companies for the first time. Although it cannot identify costs with exactitude, the board will be expending funds for overhead, staff, and equipment.
(6) What is the source of the funding to be used for the implementation and enforcement of this administrative regulation: The

board's operation is funded by fees paid by the licensees and applicants.

(7) Provide an assessment of whether an increase in fees or funding will be necessary to implement this administrative regulation, if new, or by the change if it is an amendment: No increase in fees will be necessary to implement this administrative regulation.

(8) State whether or not this administrative regulation established any fees or directly or indirectly increased any fees: This administrative regulation does directly establish fees.

(9) TIERING: Is tiering applied? No.

FISCAL NOTE ON STATE OR LOCAL GOVERNMENT

1. Does this administrative regulation relate to any program, service, or requirements of a state or local government (including cities, counties, fire departments, or school districts)? Yes

2. What units, parts or divisions of state or local government (including cities, counties, fire departments, or school districts) will be impacted by this administrative regulation? Kentucky Real Estate Appraisers Board.

3. Identify each state or federal statute or federal regulation that requires or authorizes the action taken by the administrative regulation. KRS 324A.154(1).

4. Estimate the effect of this administrative regulation on the expenditures and revenues of a state or local government agency (including cities, counties, fire departments, or school districts) for the first full year the administrative regulation is to be in effect. None

(a) How much revenue will this administrative regulation generate for the state or local government (including cities, counties, fire departments, or school districts) for the first year? None

(b) How much revenue will this administrative regulation generate for the state or local government (including cities, counties, fire departments, or school districts) for subsequent years? None

(c) How much will it cost to administer this program for the first year? None

(d) How much will it cost to administer this program for subsequent years? None

Note: If specific dollar estimates cannot be determined, provide a brief narrative to explain the fiscal impact of the administrative regulation.

Revenues (+/-):

Expenditures (+/-):

Other Explanation:

ENERGY AND ENVIRONMENT CABINET
Department for Natural Resources
Division of Mine Reclamation and Enforcement
(Amended After Comments)

405 KAR 5:085. Enforcement.

RELATES TO: KRS 350.010(2), 350.130, 350.240, 350.300

STATUTORY AUTHORITY: KRS [~~Chapter 13A,~~] 350.028, 350.029, 350.240, 350.300, 350.990

NECESSITY, FUNCTION, AND CONFORMITY: KRS Chapter 350 [~~in pertinent part,~~] requires the cabinet to promulgate administrative regulations pertaining to noncoal mineral operations to minimize their adverse effects on the citizens and the environment of the Commonwealth. This administrative regulation establishes [~~sets forth~~] provisions governing the issuance of the various notices and orders to be issued by authorized representatives of the cabinet. This [~~The~~] administrative regulation establishes [~~directs~~] that there be issued a notice of noncompliance and order for remedial measures if there is a violation. This [~~The~~] administrative regulation requires that an order for cessation and immediate compliance be issued for failure to abate a violation during a specified abatement period or for situations of an imminent danger to the health or safety of the public or significant, imminent environmental harm to land, air, or water resources. This [~~The~~] administrative regulation establishes [~~sets forth~~] the general form of the notices and orders and authority to vacate, modify, or terminate the orders or notices.

Section 1. General. (1) The secretary of the cabinet may from time to time or for a definite period designate, by written order or by other means appropriate under the circumstances, authorized representatives to perform duties pursuant to the administrative regulations contained in 405 KAR Chapter 5.

(2) Unless the secretary has made a written order contrary to the terms of this subsection, personnel authorized by the Commissioner of the Department for Natural Resources shall be [~~are deemed~~] the authorized representatives of the cabinet for the purposes of this administrative regulation.

Section 2. Inspections. (1) General. In accordance with the provisions of 405 KAR Chapter 5 [~~this chapter~~], the cabinet shall conduct or cause to be conducted [~~such~~] inspections, studies, investigations, or other determinations as it deems reasonable and necessary to obtain information and evidence to [~~which will~~] ensure that mineral operations shall be [~~are~~] conducted in accordance with the provisions of all applicable statutes and administrative regulations, and all terms and conditions of the permit.

(2) Right of entry and access. Authorized employees of the cabinet shall have unrestricted right of entry to all parts of the mineral operation for any purpose [~~associated with their proper duties~~] pursuant to 405 KAR Chapter 5 [~~this chapter~~], including [~~but not limited to~~], making inspections, and delivering documents or information of any kind to persons associated with the mineral operation.

(3) Timing and frequency of inspections.

(a) The cabinet shall conduct periodic inspections of all mineral operations.

(b) Inspections shall ordinarily be conducted at irregular and unscheduled times during normal workdays, but may be conducted at night or on weekends or holidays when the cabinet deems these inspections necessary to properly monitor compliance [~~with all applicable laws and administrative regulations~~].

(c) The cabinet shall not have [~~no~~] obligation to give prior notice that an inspection will be conducted or to obtain a warrant.

(4) Citizens request for inspections.

(a) Any citizen may request that the cabinet conduct an inspection by furnishing to the cabinet, a signed, written statement, or an oral report followed by a signed written statement, giving the cabinet reason to believe that a violation, condition, or practice in violation of KRS Chapter 350, administrative regulations promulgated pursuant thereto, or permit conditions exists, and setting forth a telephone number and address at which the person can be contacted.

(b) The identity of any person supplying information to the cabinet relating to a possible violation or imminent danger or harm shall remain confidential with the cabinet if requested by that person, unless disclosure is required by law.

(c) Within a reasonable time, the cabinet shall send to the person the following:

1. If an [~~no~~] inspection was not conducted, an explanation of the reason or reasons why [~~no inspection was conducted~~]; or

2. If an inspection was conducted, a description of the enforcement action taken, if any, or an explanation of why [~~no~~] enforcement action was not taken.

Section 3. Notice of Noncompliance and Order for Remedial Measures. (1) **All** **[**~~An~~**]** [~~Any~~] authorized representative of the cabinet shall issue a notice of noncompliance and order for remedial measures if, on the basis of an inspection, he finds a violation of KRS Chapter 350, 405 KAR Chapter 5, a [~~any~~] permit condition, or another [~~any other~~] applicable requirement.

(2) A notice of noncompliance and order for remedial measures issued pursuant to this section shall be in writing and shall be signed by the authorized employee who issued it. The notice shall contain the following information:

(a) The nature of the violation [~~violations~~];

(b) The remedial measures required, if any, which may include accomplishment of interim steps, if appropriate;

(c) A reasonable time table for remedial action, if any, which may include a time table for accomplishment of interim steps, if appropriate; and

(d) An adequate description of the portion of the mineral opera-

tion to which the notice applies.

(3) An authorized employee may modify an order for remedial measures for good cause [~~causes~~].

(4) Extensions and modifications of notices for remedial action. An authorized employee may extend the time set for remedial action or for accomplishment of an interim step, if the failure to meet the time previously set was not caused by lack of diligence on the part of the person to whom the notice of noncompliance and order for remedial measures was issued.

(a)1. The total time for remedial action under the notice, including all extensions, shall not exceed ninety (90) days from the date of issuance of the notice except upon a showing by the mineral permittee that it is not feasible to abate the violation within ninety (90) calendar days due to one (1) or more of the circumstances established [~~set forth~~] in paragraph (b) of this subsection.

2. An abatement period exceeding ninety (90) days pursuant to this subsection shall not be granted for a situation [~~situations~~] in which the mineral permittee's failure to abate within ninety (90) days has been caused by a lack of diligence or intentional delay by the mineral permittee in completing the remedial action required.

(b) The following circumstances may qualify mineral operations for an abatement period of more than ninety (90) days:

1. The mineral permittee of the ongoing mineral operation has timely applied for and diligently pursued a permit renewal or other necessary approval of designs or plans, but the permit or approval, for reasons not within the control of the mineral permittee, has not been and will not be issued prior to ninety (90) days after the valid permit or approval expires or is required;

2. There is a valid judicial order precluding abatement within ninety (90) days to which the mineral permittee has diligently pursued all rights of appeal and to which he has no other effective legal remedy;

3. The mineral permittee cannot abate within ninety (90) days due to a labor strike; or

4. Weather conditions that would clearly cause more environmental harm than abatement measures would prevent; or

5. Require action that would violate safety standards established by statute or regulation under the Mine Safety and Health Act. [~~Weather conditions preclude abatement within ninety (90) days; due to weather conditions abatement within ninety (90) days would clearly cause more environmental harm than it would prevent; or abatement within ninety (90) days requires action that would violate safety standards established by statute or regulation under the Mine Safety and Health Act.~~]

(c) If an abatement period in excess of ninety (90) days is approved by the cabinet, interim abatement measures shall be imposed to the extent necessary to minimize harm to the public and the environment.

(d)1. If any of the conditions in paragraph (b) of this subsection exist, the mineral permittee may request the authorized representative of the cabinet to grant an abatement period exceeding ninety (90) days.

2. The authorized representative of the cabinet shall not grant [~~such~~] an abatement period without the approval of the Director of the Division of Mine Reclamation and Enforcement [~~Field Services~~] or his designee, and the [~~abatement~~] period granted shall not exceed the shortest possible time necessary to abate the violation. The mineral permittee shall have the burden of establishing by clear and convincing proof that he is entitled to an extension under the provisions of this subsection.

3. In determining whether or not to grant an abatement period exceeding ninety (90) days, the authorized representative of the cabinet may consider relevant written or oral information from the mineral permittee and other sources.

4. The authorized representative of the cabinet shall promptly and fully document in the applicable file his recommendation for granting or denying the request and the reasons [~~therefor~~].

5. The authorized representative's immediate supervisor shall review this document before approving or disapproving the extended abatement period and shall promptly and fully document the reasons for his approval or disapproval in the applicable file.

(e) A determination made pursuant to [~~under~~] paragraph (d) of this subsection shall be in writing and shall be subject to administrative and judicial review pursuant to 405 KAR 5:095.

(f) An extension granted pursuant to this subsection shall not [~~No extension granted under this subsection may~~] exceed ninety (90) days in length. For a situation [~~situations~~] in which the condition or circumstance that prevented abatement within ninety (90) days exists at the expiration of the extension, the mineral permittee may request a further extension in accordance with the procedures of this subsection.

(5) Based upon the written recommendation of authorized representative of the cabinet who issued the notice or noncompliance and order for remedial measures, the director of the Division of Mine Reclamation and Enforcement [~~Field Services~~] may vacate a notice of noncompliance and order for remedial measures determined to be issued in error.

Section 4. Order for Cessation and Immediate Compliance. (1) Issuance.

(a) If the person to whom a notice of noncompliance and order for remedial measures has been issued fails to comply with the terms of the notice within the time for remedial action established in the notice or as subsequently extended, an authorized representative of the cabinet shall immediately issue to the person an order for cessation and immediate compliance.

(b) An authorized representative of the cabinet shall immediately issue an order for cessation and immediate compliance if he finds, on the basis of an inspection, a [~~any~~] condition or practice; a [~~any~~] violation of KRS Chapter 350; a [~~any~~] violation of 405 KAR Chapter 5; or a [~~any~~] violation of a term or condition of the applicable permit that [~~which~~]:

1. Creates an imminent danger to the health or safety of the public; or

2. Is causing or can reasonably be expected to cause significant, imminent environmental harm to land, air, or water resources.

(c) An authorized representative of the cabinet shall immediately issue an order for cessation and immediate compliance if he finds, on the basis of an inspection, that mineral operations are being conducted by a person without a valid mineral operations permit for the activities in accordance with this chapter.

(2) Form and content.

(a) An order for cessation and immediate compliance shall be in writing and shall be signed by the authorized representative of the cabinet who issued it. The order shall establish [~~set forth~~] with [~~reasonable~~] specificity:

1. The nature of the violation;

2. A reasonable description of the portions of the mineral operations to which it applies;

3. The remedial measures, if any, necessary to abate the violation in the most expeditious manner possible; and

4. The time established for abatement, if appropriate, including the time for complying with any interim steps.

(b) At the same time that the authorized representative of the cabinet issues an order for cessation and immediate compliance pursuant to subsection (1)(b) or (c) of this section, [~~he shall also issue~~] a notice of noncompliance and order for remedial measures **shall also be issued**.

(3) Effect.

(a)1. The order for cessation and immediate compliance shall require the cessation of all mineral operations or the portions or operations thereof relevant to the condition, practice, or violation covered by the order.

2. The order shall require the person to whom it is issued to take [~~any~~] affirmative steps that [~~which~~] the authorized representative of the cabinet deems necessary to abate the condition, practice, or violation in the most expeditious manner possible. The order may require the use of existing or additional personnel and equipment.

(b) The order shall remain in effect until the condition, practice, or violation has been abated; until the order is vacated, modified, or terminated in writing pursuant to subsection (4) of this section; or until it is vacated, modified, or terminated by a hearing officer.

(c) Reclamation operations and other activities intended to protect public health and safety and the environment shall continue during the period of an [~~any~~] order unless the order states that the reclamation operations and other activities shall cease.

(4) Modification, extension, vacation, and termination.

(a) An authorized representative of the cabinet may, by written notice, modify or terminate an order for cessation and immediate compliance issued under this section for good cause and may extend the time for abatement if the failure to abate within the time previously established [~~set~~] was not caused by lack of diligence on the part of the person to whom it was issued.

(b) The secretary or his authorized representative shall terminate an order for cessation and immediate compliance, by written notice to the person to whom the order was issued, if [~~when~~] he determines that all conditions, practices, and violations listed in the order have been abated. Termination shall not affect the right of the cabinet to assess civil penalties for those violations or to impose [~~any~~] other applicable sanctions as authorized by law.

(c) Based upon the written recommendations of the regional administrator and the authorized representative of the cabinet who issued the order for cessation and immediate compliance, the Director of the Division of Mine Reclamation and Enforcement [~~director of the division of field services~~] may vacate an order for cessation and immediate compliance determined to have been issued in error.

(5) Within sixty (60) days after issuing an order for cessation and immediate compliance, the cabinet shall notify in writing a person who has been identified as owning or controlling the mineral permittee, that the cessation order was issued and that the person has been identified as an owner or controller.

Section 5. Notice of Inspection of Noncompliance. (1) Issuance. If an authorized representative of the cabinet issues a notice of noncompliance and order for remedial measures or an order for cessation and immediate compliance, the authorized representative [~~he~~] shall reinspect the area [~~areas~~] affected by the mineral operations on or soon after the date established [~~given~~] in the notice or order for completion of remedial measures. At the time of [~~this~~] reinspection, the authorized representative of the cabinet shall issue a notice of inspection of noncompliance.

(2) Form and content. (a) The notice of inspection of noncompliance shall establish if [~~set forth whether~~]:

1. [~~(a)~~] The remedial measures have been completed, and the notice or order is therefore terminated;

2. [~~(b)~~] The remedial measures have not been completed, but the notice or order is modified or extended for good cause; or

3. [~~(c)~~] The remedial measures have not been completed.

(b) Following [~~such~~] a determination that the remedial measures have not been completed, the cabinet shall:

1. For situations in which the inspection was a reinspection of a notice of noncompliance and order for remedial measures, issue an order for cessation and immediate compliance; and

2. For situations in which the inspection was a reinspection of an order for cessation and immediate compliance and if the order for cessation and immediate compliance has not been abated, initiate:

a. An administrative hearing for suspension or revocation of the permit or approval;

b. An administrative hearing for bond forfeiture; or

c. Administrative hearings for other appropriate relief.[~~an administrative hearing for suspension or revocation of the permit or approval, initiate an administrative hearing for bond forfeiture, or initiate administrative hearings for other appropriate relief.~~]

Section 6. Service of Notices and Orders. (1) A [~~Any~~] notice of noncompliance and order for remedial measures, an [~~any~~] order for cessation and immediate compliance, and a [~~any~~] notice of inspection of noncompliance shall be served on the person to whom it was issued or the person's designated agent promptly after issuance.

(2)(a) Each notice or order shall be served[~~,~~] to the person to whom the notice or order has been issued or to his designated agent for service, by:

1. Hand;

2. Electronic mail with electronically generated receipt;

3. Certified mail, return receipt requested; or

4. Registered mail.[~~hand, by certified mail (return receipt requested), or by registered mail to the person to whom the notice or order has been issued or to his designated agent for service.~~]

(b) The notice or order shall also be served [~~by hand~~] to the individual who, based upon reasonable inquiry by the authorized representative, appears to be in charge at the site of the mineral operations referred to in the notice or order. If the individual cannot [~~no such individual can~~] be located at the site, a copy of the notice or order may be tendered to an [~~any~~] individual at the site who appears to be an employee or agent of the person to whom the notice or order has been issued.

(c) Service, whether by electronic mail, hand, or standard mail [~~hand or by mail~~], shall be complete upon tender of the notice or order and shall not be deemed incomplete because of refusal to accept.

(d) For mineral operations, service by mail shall be addressed to the designated agent for service; to the electronic or permanent address of the mineral permittee as identified on the permit or in the application; or, if an address is unavailable [~~no address is identified~~] for the mineral permittee in the application, to another [~~such other~~] address as is known to the cabinet. If a person cannot be found [~~no person is~~] present at the site of the mineral operations, services by mail shall by itself be sufficient notice.

(3) Designation by a [~~any~~] person of an agent for service of notices and orders issued pursuant to this administrative regulation and notices of hearing issued pursuant to 405 KAR 5:095 [~~405 KAR 5:085~~], shall be made a part of the applicable permit application. The person shall continue as agent for service of process until written revision of the permit is approved that [~~which~~] designates another person as the agent.

(4) The cabinet may furnish copies of notices and orders to any person having an interest which is or may be adversely affected by the mineral operations and any person having an interest in the permit.

Section 7. Penalties. The cabinet may assess penalties pursuant to KRS 350.990.

LEONARD K. PETERS, Secretary

APPROVED BY AGENCY: October 6, 2011

FILED WITH LRC: October 10, 2011 at 10 a.m.

CONTACT PERSON: Michael Mullins, Regulation Coordinator, #2 Hudson Hollow, Frankfort, Kentucky 40601, phone (502) 564-6940, fax (502) 564-5698, email Michael.Mullins@ky.gov.

REGULATORY IMPACT ANALYSIS AND TIERING STATEMENT

Contact Person: Michael Mullins

(1) Provide a brief summary of:

(a) What this administrative regulation does: This administrative regulation sets forth provisions governing the issuance of the various notices and orders to be issued by authorized representatives of the cabinet. The administrative regulation directs that there be issued a notice of noncompliance and order for remedial measures if there is a violation. The administrative regulation requires that an order for cessation and immediate compliance be issued for failure to abate a violation during a specified abatement period or for situations of an imminent danger to the health or safety of the public or significant, imminent environmental harm to land, air, or water resources. The administrative regulation sets forth the general form of the notices and orders and authority to vacate, modify, or terminate the orders or notices.

(b) The necessity of this administrative regulation: This administrative regulation is necessary to provide information to the regulated community regarding the issuance of the various notices and orders to be issued by authorized representatives of the cabinet.

(c) How this administrative regulation conforms to the content of the authorizing statutes: KRS 350.130 authorizes the cabinet to conduct enforcement procedures including transmission of notices of enforcement procedures. This administrative regulation sets forth hearing, notice and other procedural and due process provisions for the permanent regulatory program.

(d) How this administrative regulation currently assists or will assist in the effective administration of the statutes: This administrative regulation assists in the administration of the statutes by establishing the procedures for hearings and notices and other procedural and due process provisions for the permanent regulato-

ry program.

(2) If this is an amendment to an existing administrative regulation, provide a brief summary of:

(a) How the amendment will change this existing administrative regulation: The amendments contained in this administrative regulation are to correct technical drafting issues and to also amend the regulation in response to comments.

(b) The necessity of the amendment to this administrative regulation: These amendments are necessary to correct technical drafting issues and to also amend the regulation in response to comments.

(c) How the amendment conforms to the content of the authorizing statutes: KRS 350.130 authorizes the cabinet to deliver documents electronically as a means of service. This amendment places this option in administrative regulation.

(d) How the amendment will assist in the effective administration of the statutes: This amendment will assist in the administration of the statutes by providing a more efficient means of delivery. The amendments contained in this administrative regulation will also correct technical drafting issues and amend the regulation in response to comments.

(3) List the type and number of individuals, businesses, organizations, or state and local governments affected by this administrative regulation: This administrative regulation could potentially impact any non-coal permit holders within the Commonwealth of Kentucky. The current number of permits is 232.

(4) Provide an analysis of how the entities identified in question (3) will be impacted by either the implementation of this administrative regulation, if new, or by the change, if it is an amendment, including:

(a) List the actions that each of the regulated entities identified in question (3) will have to take to comply with this administrative regulation or amendment: This amendment will require entities interested in receiving enforcement notification by email to provide a current email address.

(b) In complying with this administrative regulation or amendment, how much will it cost each of the entities identified in question (3): There will be no costs to the regulated entities. The amendment to this administrative regulation includes optional criteria.

(c) As a result of compliance, what benefits will accrue to the entities identified in question (3): The entities which comply with the amendment to this administrative regulation will benefit by receiving enforcement documents by email.

(5) Provide an estimate of how much it will cost the administrative body to implement this administrative regulation:

(a) Initially: There will be no costs to the agency associated with implementation.

(b) On a continuing basis: There will be no continuing costs to the agency.

(6) What is the source of the funding to be used for the implementation and enforcement of this administrative regulation: General Fund dollars will be used to fund these provisions.

(7) Provide an assessment of whether an increase in fees or funding will be necessary to implement this administrative regulation, if new, or by the change if it is an amendment: There will not be a need to increase fees or funding to administer this administrative regulation. A cost savings will be realized by the passage of this administrative regulation.

(8) State whether or not this administrative regulation established any fees or directly or indirectly increased any fees: This administrative regulation will not increase nor does it establish any fees.

(9) TIERING: Is tiering applied? No. All entities that sign up for electronic notification will be treated equally.

FISCAL NOTE ON STATE OR LOCAL GOVERNMENT

Contact Person: Michael Mullins

1. Does this administrative regulation relate to any program, service, or requirements of a state or local government (including cities, counties, fire departments, or school districts)? Yes

2. What units, parts or divisions of state or local government (including cities, counties, fire departments, or school districts) will be impacted by this administrative regulation? The Division of Mine Reclamation and Enforcement as well as the Office of Administrative Hearings.

3. Identify each state or federal statute or federal regulation that requires or authorizes the action taken by the administrative regulation. KRS 350.028, 350.029, 350.240, 350.300, 350.990.

4. Estimate the effect of this administrative regulation on the expenditures and revenues of a state or local government agency (including cities, counties, fire departments, or school districts) for the first full year the administrative regulation is to be in effect.

(a) How much revenue will this administrative regulation generate for the state or local government (including cities, counties, fire departments, or school districts) for the first year? This amendment will generate funds by way of a cost savings to the department.

(b) How much revenue will this administrative regulation generate for the state or local government (including cities, counties, fire departments, or school districts) for subsequent years? Since this proposal is optional it is difficult to predict the savings that could be realized by this amendment because it is uncertain, how many enforcement documents would be sent out under this proposal.

(c) How much will it cost to administer this program for the first year? There are no additional costs associated with this amendment.

(d) How much will it cost to administer this program for subsequent years? There are no additional costs associated with this amendment.

Note: If specific dollar estimates cannot be determined, provide a brief narrative to explain the fiscal impact of the administrative regulation.

Revenues (+/-): This amendment will generate additional savings to the department resulting from sending out enforcement notifications by email.

Expenditures (+/-): NA

Other Explanation: NA

ENERGY AND ENVIRONMENT CABINET
Department for Natural Resources
Division of Mine Reclamation and Enforcement
(Amended After Comments)

405 KAR 5:095. Administrative hearings, informal settlement conferences, and general practice provisions.

RELATES TO: KRS 224.10-410, 350.010(2), 350.130, 350.240, 350.300, 350.990[~~, 224.10-410~~]

STATUTORY AUTHORITY: KRS [~~Chapter 13A,~~] 350.028, 350.029, 350.0301, 350.050, [~~350.0301,~~] 350.240, 350.300

NECESSITY, FUNCTION, AND CONFORMITY: KRS Chapter 350 [~~, in pertinent part,~~] requires the cabinet to promulgate administrative regulations pertaining to noncoal mineral operations to minimize their adverse effects on the citizens and the environment of the Commonwealth. This administrative regulation establishes [~~sets forth~~] provisions governing requests for administrative hearings, initiation of administrative hearings by the cabinet, informal settlement conferences, procedures for the conduct of administrative hearings, service, and administrative hearings for orders to abate and alleviate.

Section 1. Conduct of Administrative Hearings. (1)(a)1. Requests for an administrative hearing by persons other than the cabinet. A [~~Any~~] person aggrieved by an order or determination of the cabinet may request in writing that an administrative hearing be conducted by the cabinet. The request shall be filed with the Office of Administrative Hearings in Frankfort and [~~. The request for an administrative hearing~~] shall include a short and plain statement identifying the basis of the request and the order or determination being contested.

2. The request for an administrative hearing shall plainly identify the notice or order being contested if the request involves:

a. A notice of noncompliance;

b. An order for cessation and immediate compliance; or

c. A proposed penalty assessment[~~If the request for an administrative hearing involves a notice of noncompliance, order for cessation and immediate compliance or proposed penalty assessment, the request shall plainly identify the notice or order being contested. The request shall not operate as a stay of any order or notice~~].

3. The right to demand an administrative hearing shall be limited to a period of thirty (30) days after the requester has had actual notice of the action, or could reasonably have had the notice.

(b) Burden of proof.1. The cabinet shall have the burden of establishing a prima facie case as to the propriety of:

a. Notices of noncompliance and orders for remedial measures;

b. Orders for cessation and immediate compliance; or

c. The modification, vacation, or termination as established in this section [~~In review of notices of noncompliance and orders for remedial measures or orders for cessation and immediate compliance or the modification, vacation, or termination thereof under this section, the cabinet shall have the burden of going forward to establish a prima facie case as to the propriety of the notice, order, or modification, vacation, or termination thereof~~].

2. The ultimate burden of persuasion shall rest with the petitioner. In all other cases in which [~~where~~] the administrative hearing is requested by persons other than the cabinet, the petitioner shall have the burden of going forward to establish a prima facie case and the ultimate burden of persuasion as to the requested relief.

(2) Initiation of an administrative hearing by the cabinet.

(a) The cabinet may initiate an administrative hearing and may seek suspension or revocation of the permit and forfeiture of the bond if:

1. It has reason to believe that a violation of KRS Chapter 350, 405 KAR Chapter 5, or a permit condition has occurred or is occurring; [~~or~~]

2. A mineral permittee has failed to:

a. Pay a civil penalty assessed in a final order of the cabinet;

b. Undertake remedial measures mandated by a final order of the cabinet; or

c. Abate violations it was determined to have committed by final order of the cabinet;

[~~pay a civil penalty assessed in a final order of the cabinet or to undertake remedial measures mandated by a final order of the cabinet or to abate violations it was determined to have committed by a final order of the cabinet; or~~]

3. The cabinet has reason to believe that additional remedies should be sought or that an order should be entered against a [~~any~~] person to protect the environment or the health and safety of the public; [~~or~~]

4. The criteria of 405 KAR 5:082 [~~405 KAR 5:080~~] apply.

(b) Burden of proof. If the cabinet initiates an administrative hearing, the cabinet shall have the ultimate burden of persuasion. The responding party shall have the burden of persuasion to establish an affirmative defense.

(3) At an [~~any~~] administrative hearing held pursuant to subsection (1) or (2) of this section, the cabinet may seek any combination of the following:

(a) Permit suspension or revocation;

(b) Bond forfeiture;

(c) Civil penalties;

(d) A determination, pursuant to KRS 350.060, 350.085, and 350.130, that a person or persons shall not be eligible to receive another permit or conduct future mineral operations; or

(e) ~~Any other~~ relief to which it may be entitled by KRS Chapters 224 and 350.

(4) If the cabinet revokes or suspends the permit, then mining operations on the permit area shall immediately cease, and the mineral permittee shall:

(a) Complete [~~If the permit is revoked, complete~~] reclamation within the time specified in the order, if the permit is revoked; or

(b) Complete [~~If the permit is suspended, complete~~] all affirmative obligations to abate all conditions, practices, and violations as specified in the order, **if [**~~or~~**]** the permit is suspended.

(5) Informal settlement conferences. As an alternative to the administrative hearings provided at subsection (1) of this section, a permittee or other person issued a notice of noncompliance, order for cessation and immediate compliance, or proposed penalty assessment may request an informal conference with the Director, Division of Mine Reclamation and Enforcement, [~~director, Division of Field Services,~~] by submitting a written request [~~for an informal conference to the office of the director~~].

(a) The time for requesting an informal conference shall be limited to a period of thirty (30) days following issuance of the notice of noncompliance, order for cessation and immediate compliance or proposed penalty assessment.

(b) A request for informal conference shall not toll the time for requesting an administrative hearing pursuant to subsection (1) of this section.

(6) Administrative summons.

(a) Upon request pursuant to subsection (1) of this section, or upon initiation by the cabinet pursuant to subsection (2) of this section, the cabinet shall schedule an administrative hearing [~~before the cabinet~~] to be held not less than twenty-one (21) days after the notice of demand for an administrative hearing, unless the person complained against waives, in writing, the twenty-one (21) day period.

(b) The administrative summons, including a notice of administrative hearing, shall be served in accordance with Section 2 of this administrative regulation and shall include the following:

1. A statement of the time, place, and nature of the administrative hearing;

2. A statement of the legal authority for the administrative hearing;

3. Reference to the statutes and administrative regulations involved; and

4. A short statement of the reason for granting of the administrative hearing.

(c) For all administrative hearings initiated pursuant to subsection (2) of this section, notice shall also be mailed to intervenors and shall be posted at the department's appropriate regional office. [~~a statement of the time, place, and nature of the administrative hearing; a statement of the legal authority for the administrative hearing; reference to the statutes and administrative regulations involved; and a short statement of the reason for granting of the administrative hearing. For all administrative hearings initiated pursuant to subsection (2) of this section, notice shall also be mailed to any intervenors, and shall be posted at the department's appropriate regional office.~~]

(7) Prior to an administrative hearing as provided in [~~under~~] this administrative regulation, and upon seven (7) days' written notice to all parties, the hearing officer may hold a prehearing conference to consider simplification of the issues, consolidation of actions, admission of facts and documents to [~~which will~~] avoid unnecessary proof, **limitation [**~~limit~~**]** [~~limitation~~] of the number of witnesses, and other matters that [~~as will~~] aid in the disposition of the matter. Final disposition of the matter may be made at the conference by stipulation, settlement, agreed order, summary disposition, or default for nonappearance. The parties may hold additional conferences as necessary [~~may be proper~~] to resolve an [~~any~~] issue in dispute.

(8)(a) Any party to an administrative hearing may be represented by counsel, make oral or written argument, offer testimony, cross-examine witnesses, or take any combination of these actions. The cabinet may compel the attendance of witnesses and the production of documents by the issuance of subpoenas.

(b) An independent hearing officer shall preside at the administrative hearing, shall keep order, and shall conduct the administrative hearing in accordance with reasonable administrative practice.

(c) Oaths and affirmations shall be administered by the hearing officer or court reporter. The provisions of 400 KAR 1:030 and [~~400 KAR~~] 1:040 shall apply to cases before the cabinet, consistent with KRS Chapters 224 and 350.

(d) The hearing officer shall permit a [~~any~~] party to represent himself, except a corporate party shall only be represented by an attorney licensed to practice law in the Commonwealth of Kentucky. The failure of a corporate party to appear by counsel, without good cause, shall be grounds for default.

(e) Failure to appear without good cause or failure to comply

with a [~~any~~] prehearing or interlocutory order of the hearing officer shall be grounds for default.

(9) Irrelevant, immaterial, or unduly repetitious evidence shall be excluded.

(a) If necessary to ascertain facts not reasonably susceptible of proof under judicial rules of evidence, evidence not admissible thereunder may be admitted, except if precluded by statute, if it is of a type commonly relied upon by reasonable and prudent persons in the conduct of their affairs.

(b) Hearing officers shall give effect to the rules of privilege recognized by law. Objections may be made and shall be noted in the record.

(c) Subject to these requirements, if an administrative hearing will be expedited and the interests of the parties will not be prejudiced substantially, any part of the evidence may be received in written form. Documentary evidence may be received in the form of copies or excerpts.

(d) Upon request, parties shall be given an opportunity to compare the copy with the original. A party may conduct cross-examinations required for a full and true disclosure of the facts. Notice may be taken of generally recognized technical or scientific facts within the cabinet's specialized knowledge.

(e) Parties shall be notified either before or during the administrative hearing, or by reference in preliminary reports or otherwise, of the material noticed, including a [~~any~~] staff memoranda or data, and the parties [~~they~~] shall be afforded an opportunity to contest the material so noticed. The cabinet's experience, technical competence, and specialized knowledge may be utilized in the evaluation of the evidence.

(10)(a) Each administrative hearing shall be recorded, and a transcript made available on the motion of a [~~any~~] party or by order of the hearing officer. Unless otherwise agreed, the party requesting the transcript shall provide payment for the original, and all others desiring copies shall pay copying costs [~~the cost thereof~~].

(b) The record of the administrative hearing shall be open to public inspection and copies thereof shall be made available to a person upon payment of the actual cost of reproducing the original except as provided in KRS Chapter 224. The record shall consist of:

1. All pleadings, motions, and rulings;

2. Documentary and physical evidence received or considered;

3. A statement of matters officially noticed;

4. Questions and offers of proof, objections, and rulings thereon;

5. Proposed findings and recommended orders; and

6. Legal briefs.[~~The record of the administrative hearing, consisting of: all pleadings, motions, and rulings; documentary and physical evidence received or considered; a statement of matters officially noticed; questions and offers of proof, objections, and rulings thereon; proposed findings and recommended orders; and legal briefs, shall be open to public inspection and copies thereof shall be made available to any person upon payment of the actual cost of reproducing the original except as provided in KRS Chapter 224.~~]

(c) If certified by the cabinet as a true and correct copy of the testimony, the transcript shall constitute the official transcript of the evidence.

(11)(a) After the administrative hearing, the hearing officer shall issue a determination based on the preponderance of evidence appearing in the record as a whole. The determination shall establish in [~~set forth whether, in fact,~~] the violation did occur. If the violation occurred, the determination shall specify a recommended penalty and recommended remedial or compliance actions to be taken by the mineral permittee or the person conducting the mineral operation.

(b) In addition to the requirements of paragraph (a) of this subsection:

1. The hearing officer may recommend suspension or revocation of the permit or forfeiture of the bond if the mineral permittee has violated any provision of KRS Chapter 350; 405 KAR Chapter 5; a permit condition; or a final order, including failure to pay a civil penalty assessed in a final order of the cabinet;

2. The hearing officer may recommend, pursuant to KRS 350.060, 350.085, and 350.130, that a person or persons shall not be eligible to receive another permit or conduct future mineral operations;

3. The hearing officer may recommend that a person [~~or persons~~] be required to abate, repair, alleviate, or prevent violations of KRS Chapter 350; 405 KAR Chapter 5; or a permit condition, if the violations are found to exist on the basis of a preponderance of the evidence; and

4. For permit determinations, the hearing officer may recommend that a permit was issued in violation of applicable statutory and regulatory criteria, and may recommend suspension or revocation of the permit and may further recommend remedial or compliance actions to be taken by the mineral permittee.

(12) The hearing officer shall recommend the amount of a civil penalty pursuant to KRS 350.990(1) and (2) and the recommendation shall be based exclusively on the record of the administrative hearing. The hearing officer may compute the amount of the penalty to be assessed irrespective of a [~~any~~] computation offered by a [~~any~~] party, and shall state with specificity [~~particularity~~] the reason, supported by the record of the administrative hearing, for the penalty assessed in the final written report.

(13)(a) The hearing officer shall, within thirty (30) days of the close of the administrative hearing record, make a report and a recommended order to the secretary. The report and recommended order shall contain the appropriate findings of fact and conclusions of law.

(b) If the secretary finds upon written request of the hearing officer that additional time is needed, then the secretary may grant a reasonable extension.

(c) The hearing officer shall mail, postage prepaid, a copy of the report and recommended order to all parties. The parties may file, within fourteen (14) days of receipt of the hearing officer's report and recommended order, exceptions to the report and recommended order. There shall not be [~~no~~] other or further submissions.

(14) The secretary shall consider the report and recommended order and any exceptions filed and pass upon the case within a reasonable time. The secretary may remand the matter to the hearing officer, adopt the report and recommended order of the hearing officer as the cabinet's final order, or issue **the secretary's own[**~~a~~] [~~his or her own~~] final order.

(15) The cabinet shall mail the final decision of the cabinet to the parties. If an [~~any~~] extension of time is granted by the secretary for a hearing officer to complete the report, the cabinet shall notify all parties upon [~~at the time of~~] the granting of the extension.

(16) The secretary shall not grant an extension of time to the hearing officer for more than thirty (30) days for any one (1) extension, and no more than two (2) extensions shall be granted.

(17) A final order of the cabinet shall be based on **substantial** [~~substantial~~] evidence appearing in the record as a whole and shall establish [~~set forth~~] the decision of the cabinet and the facts and law upon which the decision is based.

(18) There shall not be [~~no~~] ex parte communications between the parties or representatives of the parties and the hearing officer.

(19) Any person aggrieved by a final order of the cabinet may seek judicial review as established [~~set forth~~] in KRS 224.10-470 (pertaining to abate and alleviate orders), 350.0305(2) and 350.032(2).

(20) Nothing in this administrative regulation [~~herein~~] shall prevent the cabinet from taking appropriate action in circuit court.

Section 2. Service. (1) Except as provided in subsections (3) and (4) of this section, any proposed penalty assessment, notice of administrative hearing, or other document required to be served in accordance with this section shall be served by one (1) of the following methods:

(a) The cabinet shall send copies of documents to the person to be served or instructed to be served by the initiating party, by certified mail or electronic mail pursuant to KRS 350.130.

1. The cabinet shall enter this occurrence into the record.[~~The cabinet may place a copy of the document to be served in an envelope, and address the envelope to the person to be served at the address set forth in the caption or at the address set forth in written instructions furnished by the initiating party. The cabinet shall affix adequate postage and place the sealed envelope in the~~

~~United States mail as certified mail return receipt requested. The cabinet shall forthwith enter the fact of mailing in the record and make a similar entry when the return receipt is received.~~]

2. If the envelope is returned with an endorsement showing failure of delivery, that fact shall be entered in the record.

3. Service by certified mail is complete upon delivery of the envelope or as provided by subsection (2) of this section. The return receipt shall be proof of the time, place and manner of service. To the extent that the United States postal regulations permit authorized representatives of local, state, or federal governmental offices to accept and sign for "addressee only" mail, signature by the authorized representative shall constitute service on the addressee; or

(b) The cabinet may cause the document, with necessary copies, to be transferred for service to a [~~any~~] person authorized by the secretary or by a [~~any~~] statute to deliver them, or to a [~~any~~] person authorized to deliver service for the purpose of an action in a court of law who shall serve the documents, and the return endorsed thereon shall be proof of the time and manner of service.

(2)(a) Service is effective upon acceptance of the document by a [~~any~~] mineral permittee at the permit address, upon refusal to accept the document by a [~~any~~] person at the permit address, upon the United States Postal Service's inability to deliver the document if properly addressed pursuant to subsection (1)(a) of this section, or upon failure to claim the document prior to its return to the cabinet by the United States Postal Service. The return receipt shall be proof of the acceptance, refusal, inability to deliver, or failure to claim the document.

(b) Service of documents by electronic mail shall be effective pursuant to KRS 350.130(7).

(3) Any other method of service authorized by statute, administrative regulation, or the civil rules for an action in a court of law shall be supplemental to and shall be accepted as an alternative to any of the methods of service specified in this section.

(4) In addition to the provisions of subsections [~~subsection~~] (1) through (3) of this section, the provisions of 400 KAR 1:030, shall apply to service resulting from or attendant to administrative hearings established in [~~under~~] this administrative regulation.

Section 3. Temporary Relief. (1)(a) Pending completion of the investigation and administrative hearings provided for in this administrative regulation, a hearing officer may, subject to review by the secretary, grant temporary relief from a notice or order issued pursuant to KRS Chapter 350 or the administrative regulations or a determination by the cabinet to issue a permit or release a bond.

(b) A petition for temporary relief shall be made in writing and filed with the Office of Administrative Hearing with notice to the Office of Legal Services. The petition shall contain the following:[~~A petition for temporary relief shall be in writing, shall be filed with the Office of Administrative Hearings, with notice to the Department of Law, and shall contain the following:~~]

1. A detailed statement establishing the [~~setting forth~~] reasons [~~why~~] temporary relief should be granted;

2. A showing that there is a substantial likelihood that the petitioner will prevail on the merits upon a final determination of the proceeding;

3. A statement that the relief sought will not adversely affect the health or safety of the public or cause significant, imminent environmental harm to land, air or water resources;

4. If the petition relates to an order for cessation and immediate compliance, a statement of whether the requirement for a decision on the petition within five (5) working days is waived; and

5. A statement of the specific relief requested.

(2) A hearing officer may grant temporary relief after making a written finding that the relief is warranted, and shall state the reasons for the finding. The hearing officer shall grant or deny relief expeditiously. If [~~expeditiously; however, if~~] the petition relates to an order for cessation and immediate compliance, relief shall be granted or denied within five (5) working days of receipt by the office of the petition. A hearing officer may grant temporary relief from notices and orders issued pursuant to 405 KAR Chapter 5 or a determination by the cabinet to issue a permit or release a bond**, upon conditions as are deemed appropriate, only upon a finding that: [**~~. Temporary relief may be granted upon a finding that:~~**]** [~~, upon conditions as are deemed appropriate, only upon a finding that:~~]

(a) The parties were given an opportunity to be heard in a location acceptable to both the cabinet and the petitioner;

(b) The petitioner has shown that there is a substantial likelihood that the findings on the merits in an administrative hearing conducted before the cabinet will be favorable to the petitioner;

(c) The relief will not adversely affect the health or safety of the public or cause significant, imminent environmental harm to land, air or water resources; and

(d) The relief sought is not the issuance of a permit if a permit has been denied, in whole or in part, by the cabinet, nor the release of a bond if a bond release request has been denied.

Section 4. Orders to Abate and Alleviate. (1) If the secretary issues an order to abate and alleviate pursuant to KRS 224.10-410 the cabinet shall provide the permittee or person to whom the order was issued an opportunity to be heard not more than ten (10) days following issuance of the order, unless waived in writing by the permittee or person.

(2) The order to abate and alleviate shall be filed with the Office of Administrative Hearings, which shall issue an administrative summons pursuant to Section 1(6) of this administrative regulation. Neither the scheduling nor holding of an administrative hearing pursuant to this section shall operate to terminate or stay the order, nor operate to relieve the permittee or person or persons [~~person(s)~~] named in the order from performing the affirmative obligations imposed in the order to abate and alleviate, unless the hearing officer shall find on the record that the obligations have been met or that the order was improper or inappropriate.

LEONARD K. PETERS, Secretary

APPROVED BY AGENCY: October 6, 2011

FILED WITH LRC: October 10, 2011 at 10 a.m.

CONTACT PERSON: Michael Mullins, Regulation Coordinator, #2 Hudson Hollow, Frankfort, Kentucky 40601, phone (502) 564-6940, fax (502) 564-5698, email Michael.Mullins@ky.gov.

REGULATORY IMPACT ANALYSIS AND TIERING STATEMENT

Contact Person: Michael Mullins

(1) Provide a brief summary of:

(a) What this administrative regulation does: This administrative regulation sets forth provisions governing requests for administrative hearings, initiation of administrative hearings by the cabinet, informal settlement conferences, procedures for the conduct of administrative hearings, service, and administrative hearings for orders to abate and alleviate.

(b) The necessity of this administrative regulation: This administrative regulation is necessary to provide information to the regulated community regarding requests for administrative hearings, initiation of administrative hearings by the cabinet, informal settlement conferences, procedures for the conduct of administrative hearings, service, and administrative hearings for orders to abate and alleviate.

(c) How this administrative regulation conforms to the content of the authorizing statutes: KRS 350.028 authorizes the cabinet to conduct enforcement procedures including notices. This administrative regulation sets forth hearing, notice and other procedural and due process provisions for the permanent regulatory program.

(d) How this administrative regulation currently assists or will assist in the effective administration of the statutes: This administrative regulation assists in the administration of the statutes by establishing the procedures for hearings and notices and other procedural and due process provisions for the permanent regulatory program.

(2) If this is an amendment to an existing administrative regulation, provide a brief summary of:

(a) How the amendment will change this existing administrative regulation: The amendments contained in this administrative regulation are to correct technical drafting issues and to also amend the regulation in response to comments.

(b) The necessity of the amendment to this administrative regulation: These amendments are necessary to correct technical

drafting issues and to also amend the regulation in response to comments.

(c) How the amendment conforms to the content of the authorizing statutes: KRS 350.130 authorizes the cabinet to deliver documents electronically as a means of service. This amendment places this option in administrative regulation.

(d) How the amendment will assist in the effective administration of the statutes: This amendment will assist in the administration of the statutes by providing a more efficient means of delivery. The amendments contained in this administrative regulation will also correct technical drafting issues and amend the regulation in response to comments.

(3) List the type and number of individuals, businesses, organizations, or state and local governments affected by this administrative regulation: This administrative regulation could potentially impact any non-coal permit holders within the Commonwealth of Kentucky. The current number of permits is 232.

(4) Provide an analysis of how the entities identified in question (3) will be impacted by either the implementation of this administrative regulation, if new, or by the change, if it is an amendment, including:

(a) List the actions that each of the regulated entities identified in question (3) will have to take to comply with this administrative regulation or amendment: This amendment will require entities interested in receiving enforcement notification by email to provide a current email address.

(b) In complying with this administrative regulation or amendment, how much will it cost each of the entities identified in question (3): There will be no costs to the regulated entities. The amendment to this administrative regulation includes optional criteria.

(c) As a result of compliance, what benefits will accrue to the entities identified in question (3): The entities which comply with the amendment to this administrative regulation will benefit by receiving enforcement documents by email.

(5) Provide an estimate of how much it will cost the administrative body to implement this administrative regulation:

(a) Initially: There will be no costs to the agency associated with implementation.

(b) On a continuing basis: There will be no continuing costs to the agency.

(6) What is the source of the funding to be used for the implementation and enforcement of this administrative regulation: General Fund dollars will be used to fund these provisions.

(7) Provide an assessment of whether an increase in fees or funding will be necessary to implement this administrative regulation, if new, or by the change if it is an amendment: There will not be a need to increase fees or funding to administer this administrative regulation. A cost savings will be realized by the passage of this administrative regulation.

(8) State whether or not this administrative regulation established any fees or directly or indirectly increased any fees: This administrative regulation will not increase nor does it establish any fees.

(9) TIERING: Is tiering applied? No. All entities that sign up for electronic notification will be treated equally.

FISCAL NOTE ON STATE OR LOCAL GOVERNMENT

1. Does this administrative regulation relate to any program, service, or requirements of a state or local government (including cities, counties, fire departments, or school districts)? Yes

2. What units, parts or divisions of state or local government (including cities, counties, fire departments, or school districts) will be impacted by this administrative regulation? The Division of Mine Reclamation and Enforcement as well as the Office of Administrative Hearings.

3. Identify each state or federal statute or federal regulation that requires or authorizes the action taken by the administrative regulation. KRS 350.028, 350.029, 350.050, 350.0301, 350.240, 350.300.

4. Estimate the effect of this administrative regulation on the expenditures and revenues of a state or local government agency (including cities, counties, fire departments, or school districts) for the first full year the administrative regulation is to be in effect.

(a) How much revenue will this administrative regulation generate for the state or local government (including cities, counties, fire departments, or school districts) for the first year? This amendment will generate funds by way of a cost savings to the department.

(b) How much revenue will this administrative regulation generate for the state or local government (including cities, counties, fire departments, or school districts) for subsequent years? Since this proposal is optional it is difficult to predict the savings that could be realized by this amendment because it is uncertain, how many enforcement documents would be sent under this proposal.

(c) How much will it cost to administer this program for the first year? There are no additional costs associated with this amendment.

(d) How much will it cost to administer this program for subsequent years? There are no additional costs associated with this amendment.

Note: If specific dollar estimates cannot be determined, provide a brief narrative to explain the fiscal impact of the administrative regulation.

Revenues (+/-): This amendment will generate additional savings to the department resulting from sending out enforcement notifications by email.

Expenditures (+/-): NA

Other Explanation: NA

ENERGY AND ENVIRONMENT CABINET
Department for Natural Resources
Division of Mine Reclamation and Enforcement
(Amended After Comments)

405 KAR 7:091. General practice provisions.

RELATES TO: KRS 350.028, 350.0301, 350.0305, 350.070, 350.090, 350.093, 350.130, 350.255, 350.465, 350.990, 30 C.F.R. Parts 730, 731, 732, 733, 735, 917, 30 U.S.C. 1253, 1255

STATUTORY AUTHORITY: KRS [~~Chapter 13A~~], 350.020, 350.028, 350.0301, 350.0305, 350.255, 350.465, 350.610[~~, 30 C.F.R. Parts 730, 731, 732, 733, 735, 917, 30 U.S.C. 1253, 1255~~]

NECESSITY, FUNCTION, AND CONFORMITY: KRS Chapter 350 [~~in pertinent part~~] requires the cabinet to promulgate rules and administrative regulations pertaining to surface coal mining and reclamation operations and coal exploration operations. This administrative regulation establishes [~~sets forth~~] hearing, notice and other procedural and due process provisions for the permanent regulatory program. [~~This administrative regulation and 405 KAR 7:092 contain the substance of 405 KAR 7:090 which has been repealed.~~]

Section 1. Applicability. This administrative regulation shall govern the conduct by the cabinet of all administrative hearings and conferences arising under KRS Chapter 350, including those pending at the time this administrative regulation becomes effective, and provide for public participation, pertaining to the review of determinations on permits for surface coal mining and reclamation operations and coal exploration operations, including issuance, denial, suspension, revocation, modification, and compliance with the terms of a [~~any~~] permit; notices of noncompliance and orders for remedial measures; orders for cessation and immediate compliance issued pursuant to KRS 350.130(1) or (4); determinations on performance bond amount, duration, release, and forfeiture; administrative hearings on orders to abate or alleviate issued pursuant to KRS 224.10-410 to surface coal mining and reclamation operations; and all other matters including participation in administrative hearings by a [~~any~~] person adversely affected by a determination of the cabinet which in the discretion of the cabinet are appropriate for adjudication and determination by the cabinet or arise by virtue of an order or determination of the cabinet pursuant to the permanent regulatory program for surface coal mining and reclamation operations and coal exploration operations as establishes [~~set forth~~] in KRS Chapter 350 and 405 KAR Chapters 7 through 24.

Section 2. [~~Construction. This administrative regulation shall be construed to achieve just, timely and inexpensive determinations of all questions appropriate for determination pursuant to Section 1 of this administrative regulation.~~

~~Section 3.~~] General Provisions for Conducting Administrative Hearings. (1)(a) Hearings generally. All administrative hearings shall be de novo as to all issues of fact and law, provided that those findings previously adjudicated by a final order of the secretary shall be binding against a [~~any~~] party to the administrative hearing leading to the final order. A party to an administrative hearing may be represented by counsel, make oral or written argument, offer testimony, cross-examine witnesses, or take any combination of these actions. An independent hearing officer shall preside at the administrative hearing, [~~shall~~] keep order, and [~~shall~~] conduct the administrative hearing in accordance with reasonable administrative practice and Section 2 of this administrative regulation. Oaths and affirmations shall be administered by the hearing officer or court reporter. The provisions of 400 KAR 1:030 and [~~400 KAR~~] 1:040 shall apply to cases before the cabinet, consistent with KRS Chapter 350 and 405 KAR Chapters 7 through 24. The hearing officer shall permit a [~~any~~] party to represent himself, except a corporate party shall only be represented by an attorney licensed to practice law in the Commonwealth of Kentucky. The failure of a corporate party to appear by counsel, without good cause, shall be grounds for default.

(b)1. Evidence. Irrelevant, immaterial, or unduly repetitious evidence shall be excluded. If [~~When~~] necessary to ascertain facts not reasonably susceptible to proof under rules of evidence, evidence not admissible thereunder may be admitted, except if [~~where~~] designated as confidential by statute, if it is of a type commonly relied upon by reasonable and prudent persons in the conduct of their affairs. A hearing officer [~~Hearing officers~~] shall give effect to the rules of privilege recognized by law.

2. Objections may be made and shall be noted in the record.

3. Subject to these requirements, if [~~when~~] a hearing will be expedited and the interests of the parties will not be prejudiced substantially, any part of the evidence may be received in written form. Documentary evidence may be received in the form of copies or excerpts. Upon request, parties shall be given an opportunity to compare the copy with the original.

4. A party may conduct cross-examinations required for a full and true disclosure of the facts.

5. Notice may be taken by the hearing officer of generally recognized technical or scientific facts within the cabinet's specialized knowledge. Parties shall be notified either before or during the administrative hearing, or by reference in reports or otherwise, of the material noticed, including any staff memoranda or data, and the parties shall have [~~they shall be afforded~~] an opportunity to contest the material so noticed.

6. The cabinet's experience, technical competence, and specialized knowledge may be utilized by the hearing officer in the evaluation of the evidence.

(2) Hearing officer's duties. The hearing officer shall in his discretion:

(a) Administer oaths and affirmations;

(b) Issue subpoenas in accordance with Section 9 of this administrative regulation;

(c) Issue appropriate orders relating to discovery in accordance with 400 KAR 1:040;

(d) Rule on procedural requests or similar matters;

(e) Hold prehearing conferences for settlement or simplification of the issues;

(f) Regulate the course of the administrative hearing;

(g) Rule on offers of proof and receive relevant evidence;

(h) Take any other action authorized by administrative regulation, KRS Chapter 350 and 405 KAR Chapters 7 through 24 [~~7-24~~]; and

(i) Make or recommend decisions or reports in accordance with KRS Chapter 350 and 405 KAR Chapters 7 through 24 [~~the administrative regulations~~].

(3) Prehearing conference. A hearing officer may order a prehearing conference:

(a) To simplify and clarify issues;

(b) To receive stipulations and admissions;

(c) To explore the possibility of agreement disposing of any or all of the issues in dispute; and

(d) For any other purposes as may be appropriate, including but not limited to summary disposition of the case.

(4) Summary disposition. At any time after a proceeding has begun, a party may move for a summary disposition of the whole or part of a case, in which event the following procedure shall apply:

(a) The moving party shall verify any allegations of fact with supporting affidavits, unless the moving party is relying upon:

1. Depositions;

2. Answers to interrogatories;

3. Admissions; or

4. Documents produced upon request to verify allegations.[~~depositions, answers to interrogatories, admissions, or documents produced upon request to verify such allegations.~~]

(b) A hearing officer may grant a motion and render a report and recommended order to the secretary under this section if the record, including the pleadings, depositions, answers to interrogatories, admissions, and affidavits, shows that:

1. There is no disputed issue as to any material fact; and

2. The moving party is entitled to a summary disposition as a matter of law.

(c) If a motion for a summary disposition is not granted for the entire case or for all the relief requested and an evidentiary hearing on some or all of the issues is necessary, the hearing officer shall, [~~if practicable, and~~] upon examination of all relevant documents and evidence before him, ascertain what material facts are actually and in good faith controverted. The hearing officer[~~He~~] shall issue an interim report specifying the facts that appear without substantial controversy and direct further proceedings as deemed appropriate.

(5) Hearing officer's report.

(a) The hearing officer shall, within thirty (30) days of the close of the administrative hearing record, make a report and recommended order to the secretary, except that the administrative hearing officer shall, within twenty (20) days of the close of the hearing record, make a report and recommended order in administrative hearings on permit determinations in accordance with [~~under~~] 405 KAR 7:092, Section 8.

(b) The report and recommended order shall be based on a preponderance of the evidence appearing in the record as a whole and shall contain appropriate findings of fact and conclusions of law.

(c) If the secretary finds upon written request of the hearing officer that additional time is needed, then the secretary may grant a reasonable extension. If granted by the secretary, all parties shall be notified upon [~~at the time of~~] the granting of the extension.

(d) The hearing officer's report and recommended order shall be mailed, postage prepaid, to all parties and their attorneys of record. The parties may file exceptions and responses to the exceptions as provided under KRS 350.0301(2). There shall be no other or further submissions.

(6) [~~(b)~~] The hearing officer shall recommend the amount of a civil penalty based exclusively on the record of the administrative hearing. The hearing officer may compute the amount of the penalty to be assessed irrespective of a [~~any~~] computation offered by a [~~any~~] party, and shall consider the same factors set forth in 405 KAR 7:092, Section 3(2) for consideration in setting proposed penalty assessments. The hearing officer shall state with particularity the reasons, supported by the record of the hearing, for the penalty recommended in his report.

(7) [~~(6)~~] Secretary's order.

(a) The secretary shall consider the report and recommended order, an [~~any~~] exceptions filed, and a [~~any~~] responses to exceptions, and pass upon the case within a reasonable time. The secretary may remand the matter to the hearing officer, adopt the report and recommended order of the hearing officer as a final order, or issue his own final order.

(b) The final order of the secretary shall be mailed postage prepaid to parties and their attorneys of record.

(c) A final order of the secretary shall be based on substantial evidence appearing in the record as a whole and shall establish

[~~set forth~~] the decision of the secretary and the facts and law upon which the decision is based.

Section 4. Standards of Conduct. (1) Ex parte communications.

(a) Prohibition. Except to the extent required for the disposition of ex parte matters as authorized by law, there shall not be communication concerning the merits of a proceeding between office personnel and:

1. A party to the proceeding;

2, A person interested in the proceeding; or

3. A representative of a party or interested person.

(b) If communication is made then it shall be made in the presence of all other parties or their representatives if oral, or, if written, furnished to all other parties.[~~there shall be no communication concerning the merits of a proceeding between a party to the proceeding or a person interested in the proceeding or a representative of a party or interested person and office personnel involved or who may reasonably be expected to become involved in the decision making process of an administrative hearing or conference, unless the communication, if oral, is made in the presence of all other parties or their representatives, or, if written, is furnished to all other parties.~~]

(c) Communications concerning case status or advice concerning compliance with procedural requirements shall not be [~~are not~~] prohibited unless the area of inquiry is in fact an area of controversy in the administrative hearing or conference.

(d) Oral communications made in violation of this administrative regulation shall be reduced to writing in a memorandum by the person receiving the communication and shall be included in the record.

(e) Written communications made in violation of this administrative regulation shall be included in the record. Copies of the memorandum or communication shall be provided to all parties, who shall be given an opportunity to respond in writing.

(2) [~~(b)~~] Sanctions. The hearing officer, who has responsibility for the matter in which a prohibited communication has been knowingly made, may impose appropriate sanctions on the offending person or persons, which may include requiring an offending party to show cause why his claim, motion, or interest should not be dismissed, denied, or otherwise adversely affected; and invoking the [~~such~~] sanctions against other offending persons as appropriate.

(3) [~~(2)~~] Disqualification. The hearing officer shall withdraw from a case if he deems himself disqualified pursuant to [~~under~~] the recognized canons of judicial ethics. If prior to a decision of the hearing officer an affidavit of personal bias or disqualification with substantiating facts is filed, and the hearing officer concerned does not withdraw, the secretary shall determine the matter of disqualification.

Section 5. Service. (1) A proposed penalty assessment, notice of assessment conference, notice of administrative hearing, or other documents required to be served, including administrative summonses, shall be served either as established in [~~under~~] 400 KAR 1:030 or pursuant to [~~by~~] one (1) of the following methods:

(a) The cabinet may send copies of documents to the person to be served or instructed to be served by the initiating party, by certified mail or by electronic mail pursuant to KRS 350.130. The cabinet shall enter this occurrence into the record. [~~The cabinet may place a copy of the document to be served in an envelope, and address the envelope to the person to be served at the address set forth in the caption or at the address set forth in written instructions furnished by the initiating party. The cabinet shall affix adequate postage and place the sealed envelope in the United States mail as certified mail return receipt requested. The cabinet shall forthwith enter the fact of mailing in the record and make a similar entry when the return receipt is received.~~] If the envelope is returned with an endorsement showing failure of delivery, that fact shall be entered in the record.

(b) The cabinet shall file the return receipt, electronically generated receipt, or returned envelope in the record. Service by certified mail is complete upon delivery of the envelope or as provided by subsection (2) of this section. The return receipt, return envelope, or electronically generated receipt shall be proof of the time, place, and manner of service.

(c) To the extent the United States postal regulations allow authorized representatives of local, state, or federal governmental offices to accept and sign for "addressee only" mail, signature by an [~~such~~] authorized representative shall constitute service on the addressee; [~~or~~]

(d) [~~(b)~~] The cabinet may cause the document, with necessary copies, to be transferred for service to a person authorized by the secretary or by a statute to deliver them, or to a person authorized to serve an action in a court of law who shall serve the documents, and the return endorsed thereon shall be proof of the time and manner of service; or

(e) [~~(d)~~] Service may be made upon a person issued a permit by the cabinet, upon a person specified as an operator in the permit application, or upon a person who has submitted an exploration notice or application pursuant to 405 KAR 8:020 by placing, in the United States mail as certified mail, return receipt requested, a copy of the document directed to the named agent for service or the permittee or the operator specified in the permit application (at the address specified on the face of the permit, at the permanent address for the permittee or operator specified in the permit application, or at a [~~any~~] new address that has been specified in writing by the permittee or operator), or in the case of coal exploration, by placing, in the United States mail as certified mail, return receipt requested, a copy of the document directed to the person authorized to conduct the coal exploration and addressed to said person's permanent address as noted in the exploration notice or application.

(2) Service shall be effective upon:

(a)1. Acceptance of the document by a person eighteen (18) years of age or older;

2. Refusal to accept the document by a person at the permanent address;

3. The United States Postal Service's inability to deliver the document if properly addressed pursuant to subsection (1)(a) or (c) of this section; or

4. Upon failure to claim the document prior to its return to the cabinet by the United States Postal Service; or

(b) Delivery of the document to the recipient's inbox by electronic mail as electronically communicated to the cabinet by an electronic registered receipt.[;~~upon acceptance of the document by any person eighteen (18) years of age or older at the permanent address, upon refusal to accept the document by any person at the permanent address, upon the United States Postal Service's inability to deliver the document if properly addressed pursuant to subsection (1)(a) or (c) of this section, or upon failure to claim the document prior to its return to the cabinet by the United States Postal Service. The return receipt shall be proof of acceptance, refusal, inability to deliver, or failure to claim the document.~~]

(3) An [~~Any~~] other method of service authorized by statute, administrative regulation, or the civil rules for an action in a court of law shall be supplemental to and shall be accepted as an alternative to [~~any of~~] the methods of service specified in this section.

(4) A copy of each document filed in a proceeding pending before the office shall [~~must~~] be served by the filing party on all other parties in the case. In all cases in which [~~where~~] a party is represented by an attorney, the [~~such~~] attorney shall [~~will~~] be recognized as fully controlling the case. Service of a [~~any~~] document relating to the proceeding shall be made upon the attorney in addition to an [~~any~~] other service specifically required by law or by order of the cabinet.

(5) Service shall be made upon the cabinet by serving the Office of General Counsel [~~commissioner of the Department of Law~~] and shall be effective upon receipt by the Office of General Counsel [~~the Department of Law~~].

Section 6. Administrative Summons and Public Notice of Hearing. (1) Upon receipt of an initiating document, the office shall promptly serve in accordance with Section 5 of this administrative regulation, a copy of the document upon all parties designated to be served along with an administrative summons notifying the responding party that an initiating document has been filed against him and unless a written defense is timely served, action adverse to his interests may be taken. At [~~If appropriate and at~~] the direction

of the hearing officer, the administrative summons may also designate that a prehearing conference or administrative hearing shall be held along with the date, time, and place of the prehearing conference or administrative hearing. An administrative summons shall also include a statement of the legal authority for the hearing and reference to the statutes and regulations involved.

(2) For all administrative hearings initiated pursuant to 405 KAR 7:092, Section 5, notice of the scheduled hearing shall be:

(a) Mailed to interveners;

(b) Posted at the department's appropriate regional office; and

(c) Published in a newspaper of general circulation in the area of the surface coal mining and reclamation operations or coal exploration operations, if practicable.[~~also be mailed to any intervenors, shall be posted at the department's appropriate regional office and, if practicable, shall be published in a newspaper of general circulation in the area of the surface coal mining and reclamation operations or coal exploration operations.~~]

Section 7. Filing and Retention of Documents. (1) Filing of documents. A document is considered filed in the office when the document is received and stamped by the office.

(2)(a) Retention of documents. All documents, books, records, papers, etc., received in evidence in a hearing or submitted for the record in a proceeding before the cabinet shall [~~will~~] be retained with the official record of the proceedings. The withdrawal of original documents may be permitted while the case is pending upon terms and conditions as may be directed by the hearing officer.

(b) When an order of the secretary becomes [~~has become~~] final, the hearing officer in his discretion may, upon request and after notice to the other parties, authorize the withdrawal of original exhibits or any part by the authorized party.

(c) The substitution of true copies of exhibits or any part may be required by the hearing officer in his discretion as a condition of granting permission for withdrawal.

(3) Record address. A person who files a document for the record in connection with an administrative hearing shall state his mailing address, email address **if one is available**, facsimile number **if one is available**, and telephone number at the initial filing in the matter. If a person has a change of mailing address, email address, facsimile number, or telephone number then the new information shall be promptly served to the office with the file number relating to all matters in which he has made a filing. [~~A person who files a document for the record in connection with an administrative hearing before the office shall at the time of initial filing in the matter state his mailing address and telephone number. Thereafter, he shall promptly inform the office of a change in mailing address or telephone number, giving the file number relating to all matters in which he has made a filing.~~] The successor [~~successors~~] of the person, who filed the document, shall likewise promptly inform the office of their interest in the matter [~~matters~~] and state their address and telephone number [~~addresses and telephone numbers~~]. A person who [~~If a person~~] fails to furnish a record address and telephone number as required, shall [~~he will~~] not be entitled to notice in connection with the proceedings.

(4) Transcripts. All administrative hearings shall [~~will~~] be recorded verbatim and transcripts [~~thereof~~] shall be made if [~~when~~] requested by interested parties. Costs of transcripts shall be borne by the requesting parties. Fees for transcripts prepared from recordings by office employees shall [~~will~~] be at rates that [~~which~~] cover the cost of manpower, machine use and materials. If the reporting is done pursuant to a contract between the reporter and the cabinet, costs of transcripts shall [~~will~~] be at rates established by the contract.

Section 8. Time. (1) Computation of time for the initiation of an administrative proceeding or the subsequent filing of a document shall be in accordance with KRS 446.030 and 400 KAR 1:030, Section 3 [~~, Section 4~~].

(2) The time for filing or serving a [~~any~~] document may be extended by a hearing officer except for the time for filing a petition for an administrative hearing under 405 KAR 7:092 or if an extension is contrary to law or administrative regulation.

(3) A request for an extension of time shall be filed within the time allowed for filing or serving the document.

Section 9. Subpoenas. The office shall issue subpoenas requiring the attendance of witnesses or production of books, papers, documents, or tangible things designated therein, or both, at administrative hearings to be held before or at the taking of depositions to be held before other officers. Subpoenas shall be issued on a form approved by the office. A subpoena may be served by a person who is not less than eighteen (18) years of age. The original subpoena bearing a certificate of service shall be filed with the office or the subpoena may be served by certified mail, return receipt requested. The return receipt if signed by the addressee or his authorized agent shall constitute proof of service of the subpoena.

Section 10. Location of Administrative Hearings and Penalty Assessment Conferences. (1) A penalty assessment conference shall be held in the department's regional office for the mine site, unless a closer location is approved by the conference officer.

(2) Administrative hearings shall be held at the location designated by the hearing officer unless a written request for a hearing at or close to the mine site is submitted with the petition or other initiating document or answer upon the filing with the office of [~~at the time~~] the petition or other initiating document or answer [~~is filed with the office~~]. The department's regional office for the mine site shall be deemed reasonably close, unless a closer location is requested by a party to the case and agreed to by the hearing officer.

Section 11. Intervention and Consolidation. (1) [~~Who may file.~~] A person may petition in writing for leave to intervene at any stage of a proceeding under 405 KAR 7:092. A petitioner shall establish [~~set forth~~] a statement indicating [~~setting forth~~] the interest of the petitioner and, if required, a showing of why the interest is or may be adversely affected.

(2) Criteria to intervene.

(a) The hearing officer shall grant intervention if the petitioner:

1. Had a statutory right to initiate the proceeding in which he wishes to intervene; or

2. Has an interest that [~~which~~] is or may be adversely affected by the outcome of the proceeding.

(b) If the criteria established [~~set forth~~] in paragraph (a) of this subsection does not apply, the hearing officer shall consider the following in determining if [~~whether~~] intervention is appropriate:

1. The nature of the issues;

2. The adequacy of representation of petitioner's interest which is provided by the existing parties to the proceeding;

3. The ability of the petitioner to present relevant evidence and argument; and

4. The effect of intervention on the cabinet's implementation of its statutory mandate.

(3) Effect of ruling. A person granted leave to intervene in a proceeding may participate in the proceeding as a full party or [~~, if desired,~~] in a limited capacity. If an intervenor wishes to participate in a limited capacity, the extent and the terms of the participation shall be at the discretion of the hearing officer.

(4) Consolidation. If[~~When~~] proceedings involving the same parties or a common question of law or fact are pending before the cabinet, the proceedings shall be [~~are~~] subject to consolidation pursuant to a motion by a party or at the initiative of the hearing officer.

Section 12. Judicial Review, Effect, and Subsequent Proceedings. (1) Judicial review. Judicial review may be taken from a final order of the secretary to the appropriate circuit court of competent jurisdiction in accordance with KRS 350.032 or 350.0305 as applicable.

(2) Effect of final order pending judicial review. The commencement of proceedings for judicial review of a final order of the secretary shall not operate as a stay of a final order, unless specifically ordered by the court of competent jurisdiction.

(3) Remands from courts. If[~~Whenever~~] a matter is remanded from a [~~any~~] court for further proceedings, and to the extent the court's directive and time limitations will permit, the parties shall be allowed an opportunity to submit to the appropriate hearing officer, a report recommending procedures to be followed in order to comply with the court's order. The hearing officer shall [~~will~~] review

the reports and enter special orders governing the handling of matters remanded to it for further proceedings by a [~~any~~] court.

LEONARD K. PETERS, Secretary
APPROVED BY AGENCY: October 6, 2011
FILED WITH LRC: October 10, 2011 at 10 a.m.
CONTACT PERSON: Michael Mullins, Regulation Coordinator, #2 Hudson Hollow, Frankfort, Kentucky 40601, phone (502) 564-6940, fax (502) 564-5698, email Michael.Mullins@ky.gov

REGULATORY IMPACT ANALYSIS AND TIERING STATEMENT

Contact Person: Michael Mullins
(1) Provide a brief summary of:
(a) What this administrative regulation does: KRS Chapter 350 requires the cabinet to promulgate rules and administrative regulations pertaining to surface coal mining and reclamation operations and coal exploration operations. This administrative regulation sets forth hearing, notice and other procedural and due process provisions for the permanent regulatory program.
(b) The necessity of this administrative regulation: This administrative regulation is necessary to provide information to the regulated community on the hearing, notice and the other procedural and due process provisions for the program.
(c) How this administrative regulation conforms to the content of the authorizing statutes: KRS 350.028 authorizes the cabinet to conduct investigations and hearings under the provisions of KRS Chapter 350 or regulations adopted pursuant thereto. This administrative regulation sets forth hearing, notice and other procedural and due process provisions for the permanent regulatory program.
(d) How this administrative regulation currently assists or will assist in the effective administration of the statutes: This administrative regulation assists in the administration of the statutes by establishing the procedures for hearings and notices and other procedural and due process provisions for the permanent regulatory program.
(2) If this is an amendment to an existing administrative regulation, provide a brief summary of:
(a) How the amendment will change this existing administrative regulation: This amendment allows service of documents to be achieved electronically in addition to current methods.
(b) The necessity of the amendment to this administrative regulation: This amendment is necessary to enable the department to send proposed penalty assessments, notice of assessment conferences, notice of administrative hearings, or other documents required to be served, including administrative summonses by electronic mail.
(c) How the amendment conforms to the content of the authorizing statutes: KRS 350.130 authorizes the cabinet to deliver documents by electronically as a means of service. This amendment places this option in administrative regulation.
(d) How the amendment will assist in the effective administration of the statutes: This amendment will assist in the administration of the statutes by changing the location for holding the hearings and assessments.
(3) List the type and number of individuals, businesses, organizations, or state and local governments affected by this administrative regulation: This administrative regulation could potentially impact any permit holders within the Commonwealth of Kentucky. The average number of permit holders from December 2000 to December 2010 is 448.
(4) Provide an analysis of how the entities identified in question (3) will be impacted by either the implementation of this administrative regulation, if new, or by the change, if it is an amendment, including:
(a) List the actions that each of the regulated entities identified in question (3) will have to take to comply with this administrative regulation or amendment: This amendment is optional and will only require the entities listed in (3) to provide an email address if they are interested in receiving notices by email.
(b) In complying with this administrative regulation or amendment, how much will it cost each of the entities identified in question (3): This cost will vary depending on the number of entities sign up for this service.
(c) As a result of compliance, what benefits will accrue to the entities identified in question (3): The entities which sign up for this service will benefit by receiving enforcement notifications in a timelier manner.
(5) Provide an estimate of how much it will cost the administrative body to implement this administrative regulation:
(a) Initially: There will be no costs to the agency associated with implementation.
(b) On a continuing basis: There will be no continuing costs to the agency.
(6) What is the source of the funding to be used for the implementation and enforcement of this administrative regulation: General Fund dollars will be used to fund this program.
(7) Provide an assessment of whether an increase in fees or funding will be necessary to implement this administrative regulation, if new, or by the change if it is an amendment: There will not be a need to increase fees or funding to administer this administrative regulation.
(8) State whether or not this administrative regulation established any fees or directly or indirectly increased any fees: This administrative regulation will not increase nor does it establish any fees.
(9) TIERING: Is tiering applied? No. The procedures for hearings and penalty assessments will be the same for all entities that are involved in the hearing process.

FISCAL NOTE ON STATE OR LOCAL GOVERNMENT

1. Does this administrative regulation relate to any program, service, or requirements of a state or local government (including cities, counties, fire departments, or school districts)? Yes
2. What units, parts or divisions of state or local government (including cities, counties, fire departments, or school districts) will be impacted by this administrative regulation? The Division of Mine Reclamation and Enforcement as well as the Office of Administrative Hearings.
3. Identify each state or federal statute or federal regulation that requires or authorizes the action taken by the administrative regulation. KRS 350.020, 350.028, 350.0301, 350.255, 350.465, 350.610, 30 C.F.R. Parts 730, 731, 732, 733, 735, 917, 30 U.S.C. 1253, 1255.
4. Estimate the effect of this administrative regulation on the expenditures and revenues of a state or local government agency (including cities, counties, fire departments, or school districts) for the first full year the administrative regulation is to be in effect.
(a) How much revenue will this administrative regulation generate for the state or local government (including cities, counties, fire departments, or school districts) for the first year? This amendment will generate funds by way of a cost savings to the department. The passage of HB 215 from the 2010 Legislative Session dealing with coal related enforcement notifications resulted in a savings to the Division of Mine Reclamation and Enforcement of $25,000.
(b) How much revenue will this administrative regulation generate for the state or local government (including cities, counties, fire departments, or school districts) for subsequent years? Since this proposal is optional it is difficult to predict the savings that could be realized by this amendment because it is uncertain, how many enforcement documents would be sent out under this proposal.
(c) How much will it cost to administer this program for the first year? There are no additional costs associated with this amendment.
(d) How much will it cost to administer this program for subsequent years? There are no additional costs associated with this amendment.
Note: If specific dollar estimates cannot be determined, provide a brief narrative to explain the fiscal impact of the administrative regulation.
Revenues (+/-): This amendment will generate additional savings to the department resulting from sending out enforcement notifications by email.
Expenditures (+/-): NA
Other Explanation: NA

FEDERAL MANDATE ANALYSIS COMPARISON

1. Federal statute or regulation constituting the federal mandate. 30 C.F.R. 840 and 30 C.F.R. 843.14.

2. State Compliance Standards. KRS 350.990 and KRS 350.130

3. Minimum or uniform standards contained in the federal mandate. The standards within the listed regulations are related to enforcement and service of documents.

4. Will this administrative regulation impose stricter requirements, or additional or different responsibilities or requirements, than those required by the federal mandate. This administrative regulation does not impose stricter standards.

5. Justification for the imposition of the stricter standard, or additional or different responsibilities or requirements. NA

ENERGY AND ENVIRONMENT CABINET
Department for Natural Resources
Division of Mine Reclamation and Enforcement
(Amended After Comments)

405 KAR 12:020. Enforcement.

RELATES TO: KRS 350.020, 350.028, 350.050, 350.085, 350.113, 350.130, 350.151, 350.465, 350.990, 30 C.F.R. Parts 730-733, 735, 840.13-.14, 840.16, 843, 30 U.S.C. 1253, 1255, 1271

STATUTORY AUTHORITY: KRS [~~Chapter 13A,~~] 350.020, 350.028, 350.050, 350.130, 350.465[~~, 30 C.F.R. Parts 730-733, 735, 840.13-.14, 840.16, 843, 30 U.S.C. 1253, 1255, 1271~~]

NECESSITY, FUNCTION, AND CONFORMITY: KRS Chapter 350 [~~in pertinent part~~] directs the cabinet to [~~rigidly~~] enforce administrative regulations promulgated to control the injurious effects of surface coal mining and reclamation operations. This administrative regulation establishes [~~sets forth~~] various kinds of notices and orders to be issued by authorized representatives of the cabinet. The administrative regulation **directs [**~~establishes~~**]** [~~directs~~] that there shall be issued a notice of noncompliance and order for remedial measures. The administrative regulation **requires [**~~establishes~~**]** [~~requires~~] that an order for cessation and immediate compliance be issued for failure to abate a violation during a specified abatement period or for situations of imminent harm. The administrative regulation establishes [~~sets forth~~] the general form of the notices and orders and authority to vacate, modify, or terminate the orders or notices. This administrative regulation sets forth procedures for an informal hearing. The administrative regulation establishes [~~sets forth~~] requirements if a permit is suspended or revoked and procedures for a determination of a pattern of violations. [~~This administrative regulation contains a portion of 405 KAR 7:090 which has been repealed.~~]

Section 1. General. (1) The secretary of the cabinet may [~~from time to time or for a definite period~~] designate, by written order or by other means appropriate under the circumstances, authorized representatives to perform duties pursuant to the administrative regulations contained in 405 KAR Chapters 7 through 24.

(2) Subject to 405 KAR Chapters 7 through 24 or unless the secretary has made a written order contrary to the terms of this subsection, personnel authorized by the commissioner of the department shall be [~~are deemed the~~] authorized representatives of the cabinet for the purposes of Sections 2, 3, and 4 of this administrative regulation.

Section 2. Notice of Noncompliance and Order for Remedial Measures. (1) Issuance. An authorized representative of the cabinet shall issue a notice of noncompliance and order for remedial measures if, on the basis of inspection, he finds a violation of:

(a) KRS Chapter 350;

(b) 405 KAR Chapters 7 through 24;

(c) A term or condition of a permit;

(d) A term or condition of approval (for coal exploration and reclamation operations requiring cabinet approval); or

(e) Any other applicable requirement.[~~a violation of KRS Chapter 350; 405 KAR Chapters 7 through 24; any term or condition of a permit; any term or condition of approval (for coal exploration and reclamation operations requiring cabinet approval); or any other applicable requirement.~~]

(2) Form and content. A notice of noncompliance and order for remedial measures issued pursuant to this section shall be in writing and shall be signed by the authorized representative of the cabinet who issued it. The notice shall establish [~~sets forth~~] with reasonable specificity:

(a) The nature of the violation;

(b) The remedial action required, if any, which may include accomplishment of interim steps if appropriate;

(c) A reasonable time for remedial action, if any, which may include time for accomplishment of interim steps if appropriate; and

(d) A reasonable description of the portions of the surface coal mining and reclamation operations or coal exploration and reclamation operations to which the notice applies.

(3) Service. Service of a notice of noncompliance and order for remedial measures shall be in the manner established [~~sets forth~~] in Section 5 of this administrative regulation.

(4) Extension. An authorized representative of the cabinet may, by written notice, extend the time set for remedial action or for accomplishment of an interim step, if the failure to meet the time previously set was not caused by lack of diligence on the part of the person to whom the notice of noncompliance and order for remedial measures was issued.

(a)1. The total time for remedial action under the notice, including all extensions, shall not exceed ninety (90) days from the date of issuance of the notice except upon a showing by the permittee or the person conducting the coal exploration and reclamation operations that it is not feasible to abate the violation within ninety (90) calendar days due to one (1) or more of the circumstances **established [**~~establishes~~**]** [~~sets forth~~] in paragraph (b) of this subsection.

2. An abatement period exceeding ninety (90) days pursuant to this subsection shall not be granted for situations in which the permittee's failure or the failure of the person conducting the coal exploration and reclamation operations to abate within ninety (90) days has been caused by a lack of diligence or intentional delay by the permittee or the person conducting the coal exploration and reclamation operations in completing the remedial action required.

(b) The following circumstances may qualify surface coal mining and reclamation operations or coal exploration and reclamation operations for an abatement period of more than ninety (90) days:

1. The permittee of the ongoing surface coal mining and reclamation operations or the person conducting the coal exploration and reclamation operations has timely applied for and diligently pursued a permit renewal or other necessary approval of designs or plans, but the permit or approval, for reasons not within the control of the permittee or the person conducting the coal exploration and reclamation operations, has not been and will not be issued prior to ninety (90) days after the valid permit or approval expires or is required;

2. There is a valid judicial order precluding abatement within ninety (90) days to which the permittee or the person conducting the coal exploration and reclamation operations has diligently pursued all rights of appeal and to which he has no other effective legal remedy;

3. The permittee or the person conducting the coal exploration and reclamation operations cannot abate within ninety (90) days due to a labor strike; or

4. **Where climatic conditions preclude abatement within ninety (90) days, or where, due to climatic conditions, abatement within ninety (90) days clearly:**

a. Would cause more environmental harm than it would prevent; or

b. Requires action that would violate safety standards established by statute or regulation under the Mine Safety and Health Act.[~~Weather conditions that would clearly cause more environmental harm than abatement measures would prevent; or~~

~~5. Require action that would violate safety standards established by statute or regulation under the Mine Safety and Health Act.~~][~~Weather conditions preclude abatement within ninety (90) days; due to weather conditions abatement within ninety (90) days~~

~~would clearly cause more environmental harm than it would prevent; or abatement within ninety (90) days requires action that would violate safety standards established by statute or regulation under the Mine Safety and Health Act.~~]

(c) If an abatement period in excess of ninety (90) days is approved by the cabinet, interim abatement measures shall be imposed to the extent necessary to minimize harm to the public and the environment.

(d)1. If any of the conditions in paragraph (b) of this subsection exist, the permittee or the person conducting the coal exploration and reclamation operations may request the authorized representative of the cabinet to grant an abatement period exceeding ninety (90) days.

2. The authorized representative of the cabinet shall not grant [~~such~~] an abatement period without the approval of the Director of the Division of Mine Reclamation and Enforcement [~~Division of Field Services~~] or his designee, and the abatement period granted shall not exceed the shortest possible time necessary to abate the violation.

3. The permittee or the person conducting the coal exploration and reclamation operations shall have the burden of establishing by clear and convincing proof that he is entitled to an extension under the provisions of this subsection. In determining whether or not to grant an abatement period exceeding ninety (90) days, the authorized representative of the cabinet may consider relevant written or oral information from the permittee, the person conducting the coal exploration and reclamation operations, and other sources. The authorized representative of the cabinet shall promptly and fully document in the applicable file his recommendation for granting or denying the request and the reasons therefor.

4. The authorized representative's immediate supervisor shall review this document before approving or disapproving the extended abatement period and shall promptly and fully document the reasons for his approval or disapproval in the applicable file.

(e) A determination made pursuant to [~~under~~] paragraph (d) of this subsection shall be in writing and shall be subject to administrative and judicial review pursuant to 405 KAR 7:092.

(f) No extension granted pursuant to [~~under~~] this subsection may exceed ninety (90) days in length. In situations in which the condition or circumstance that prevented abatement within ninety (90) days exists at the expiration of the extension, the permittee or the person conducting the coal exploration and reclamation operations may request a further extension in accordance with the procedures of this subsection.

(5) Modification. An authorized representative of the cabinet may, by written notice, modify an order for remedial measures for good cause.

(6) Termination. An authorized representative of the cabinet shall, by issuance of a notice of inspection of noncompliance, provide written notice to the person to whom a notice of noncompliance and order for remedial measures has been issued that the notice is terminated when the authorized representative of the cabinet determines that all violations listed therein have been corrected. The termination shall not affect the right of the cabinet to assess civil penalties for those violations pursuant to 405 KAR 7:092 or to impose other applicable sanctions as authorized by law.

(7) Vacation. Based upon the written recommendation of the regional administrator and the authorized representative of the cabinet who issued the notice of noncompliance and order for remedial measures, the Director of the Division of Mine Reclamation and Enforcement [~~Field Services~~] may vacate a notice of noncompliance and order for remedial measures determined to have been issued in error.

Section 3. Order for Cessation and Immediate Compliance. (1) Issuance.

(a) If the person to whom a notice of noncompliance and order for remedial measures has been issued fails to comply with the terms of the notice within the time for remedial action established in the notice or as subsequently extended, an authorized representative of the cabinet shall immediately issue to the person an order for cessation and immediate compliance.

(b) An authorized representative of the cabinet shall immediately issue an order for cessation and immediate compliance if he finds, on the basis of an inspection, a [~~any~~] condition or practice; a [~~any~~] violation of KRS Chapter 350; a [~~any~~] violation of 405 KAR Chapters 7 through 24; or a [~~any~~] violation of a term or condition of the applicable permit or exploration approval that [~~which~~]:

1. Creates an imminent danger to the health or safety of the public; or

2. Is causing or can reasonably be expected to cause significant, imminent environmental harm to land, air, or water resources.

(c) An authorized representative of the cabinet shall immediately issue an order for a cessation and immediate compliance if he finds, on the basis of an inspection, that surface coal mining and reclamation operations are being conducted by a person without a valid surface coal mining and reclamation operations permit for the activities or that coal exploration and reclamation operations are being conducted without proper notice of intention to explore or approval for the operations, as applicable, in accordance with 405 KAR 8:020.

(2) Form and content.

(a) An order for cessation and immediate compliance shall be in writing and shall be signed by the authorized representative of the cabinet who issued it. The order shall **set forth [~~establish~~]** [~~set forth~~] with reasonable specificity:

1. The nature of the violation;

2. A reasonable description of the portions of the operations in which it applies;

3. The remedial measures, if any, necessary to abate the violation in the most expeditious manner possible; and

4. The time established for abatement, if appropriate, including the time for complying with [~~any~~] interim steps.

(b) At the same time that the authorized representative of the cabinet issues an order for cessation and immediate compliance pursuant to subsection (1)(b) or (c) of this section, he shall also issue a notice of noncompliance and order for remedial measures.

(3) Service. Service of an order for cessation and immediate compliance shall be in the manner established [~~set forth~~] in Section 5 of this administrative regulation.

(4) Effect.

(a) The order for cessation and immediate compliance shall require the cessation of:

1. All surface coal mining and reclamation operations;

2. All coal exploration and reclamation operations; or

3. The portions or operations thereof relevant to the condition, practice, or violation covered by the order.[~~all surface coal mining and reclamation operations, all coal exploration and reclamation operations, or the portions or operations thereof relevant to the condition, practice, or violation covered by the order.~~]

(b) The order shall require the person to whom it is issued to take [~~any~~] affirmative steps which the authorized representative of the cabinet deems necessary to abate the condition, practice, or violation in the most expeditious manner possible. The order may require the use of existing or additional personnel and equipment.

(c) [~~(b)~~] The order shall remain in effect until the condition, practice, or violation has been abated; until the order is vacated, modified, or terminated in writing pursuant to subsection (5) of this section; until it is vacated, modified, or terminated by a hearing officer pursuant to 405 KAR 7:092; or until the order expires pursuant to Section 6 of this administrative regulation.

(d) [~~(c)~~] Reclamation operations and other activities intended to protect public health and safety and the environment shall continue during the period of an [~~any~~] order unless the order states that the reclamation operations and other activities shall cease.

(5) Modification, extension, vacation, and termination.

(a) An authorized representative of the cabinet may, by written notice, modify or terminate an order for cessation and immediate compliance issued under this section for good cause and may extend the time for abatement if the failure to abate within the time previously set was not caused by lack of diligence on the part of the person to whom it was issued.

(b) The secretary or his authorized representative shall terminate an order for cessation and immediate compliance, by written notice to the person to whom the order was issued, when he determines that all conditions, practices, and violations listed in the order have been abated. Termination shall not affect the right of

the cabinet to assess civil penalties for those violations under 405 KAR 7:092 or to impose [~~any~~] other applicable sanctions as authorized by law.

(c) Based upon the written recommendations of the regional administrator and the authorized representative of the cabinet who issued the order for cessation and immediate compliance, the Director of the Division Mine Reclamation and Enforcement [~~of Field Services~~] may vacate an order for cessation and immediate compliance determined to have been issued in error.

(6) Within sixty (60) days after issuing an order for cessation and immediate compliance, the cabinet shall notify in writing a person who has been identified under 405 KAR 8:010, Section 18(5) and either 405 KAR 8:030, Section 2(3) and (4) or [~~405 KAR~~] 8:040, Section 2(3) and (4) as owning or controlling the permittee, that the cessation order was issued and that the person has been identified as an owner or controller.

Section 4. Notice of Inspection and Noncompliance. (1) Issuance. If an authorized representative of the cabinet issues a notice of noncompliance and order for remedial measures or an order for cessation and immediate compliance, he shall reinspect the areas affected by the surface coal mining and reclamation operations or the coal exploration and reclamation operations on or soon after the date given in the notice or order for completion of remedial measures. At the time of reinspection, the authorized representative of the cabinet shall issue a notice of inspection of noncompliance.

(2) Form and content. The notice of inspection of noncompliance shall establish if [~~set forth whether~~]:

(a) The remedial measures have been completed[~~,~~] and the notice or order is therefore terminated;

(b) The remedial measures have not been completed, but the notice or order is modified or extended for good cause; or

(c) The remedial measures have not been completed. Following this [~~such a~~] determination, the cabinet shall:

1. For the situations in which the inspection was a reinspection of a notice of noncompliance and order for remedial measures, issue an order for cessation and immediate compliance; and

2. For situations in which the inspection was a reinspection of an order for cessation and immediate compliance and if the order for cessation and immediate compliance has not been abated, initiate an administrative hearing for suspension or revocation of the permit or approval, initiate an administrative hearing for bond forfeiture, or initiate administrative hearings for other appropriate relief.

(3) Service. Service of a notice of inspection for noncompliance shall be in the manner established [~~set forth~~] in Section 5 of this administrative regulation.

Section 5. Service of Notices and Orders. (1) A notice of noncompliance and order for remedial measures, order for cessation and immediate compliance, or notice of inspection of noncompliance shall be promptly served on the person to whom it is issued or the person's designated agent.

(2)(a) Each notice of noncompliance and order for remedial measures, order for cessation and immediate compliance, and notice of inspection of noncompliance shall be served by:

1. Hand;

2. Certified mail (return receipt requested);

3. Registered mail; or

4. Electronic mail.

[~~hand, by certified mail (return receipt requested), or by registered mail to the person to whom the notice or order has been issued or to his designated agent for service.~~]

(b) The notice or order shall also be served by hand to the individual who, based upon reasonable inquiry by the authorized representative, appears to be in charge at the site of the surface coal mining and reclamation operations or coal exploration and reclamation operations referred to in the notice or order.

(c) If no such individual can be located at the site, a copy of the notice or order may be tendered to an individual at the site who appears to be an employee or agent of the person to whom the notice or order has been issued.

(3) Service, whether by hand, electronic mail or by mail, shall be complete upon tender of the notice or order and shall not be [~~deemed~~] incomplete because of refusal to accept.

(a) For surface coal mining and reclamation operations, service by electronic mail or mail shall be addressed to the designated agent for service; to the permanent or electronic address of the permittee as identified on the permit or in the application; or, if no address is identified for the permittee in the application, to an [~~any~~] other address as is known to the cabinet.

(b) For coal exploration and reclamation operations, service by electronic mail or mail shall be addressed to the designated agent for service; to the permanent or electronic address of the person conducting the coal exploration and reclamation operations as identified in the notice of intention to explore or in the application for coal exploration and reclamation approval submitted pursuant to 405 KAR 8:020; or, if no address is identified for the person conducting the coal exploration and reclamation operations in the notice or the application submitted pursuant to 405 KAR 8:020, to an [~~any~~] other address as is known to the cabinet.

(c) If no person is present at the site of the surface coal mining and reclamation operations or the coal exploration and reclamation operations, service by electronic mail or mail shall by itself be sufficient notice.

(4) [~~(3)~~] Designation by a person of an agent for service of notices and orders issued pursuant to this administrative regulation and notices of hearing issued pursuant to 405 KAR 7:092 shall be made a part of the applicable permit application, notice of intention to explore, or application for coal exploration and reclamation approval. The person shall continue as agent for service of process until written revision of the permit, a notice of intention to explore, or coal exploration and reclamation approval is made that [~~which~~] designates another person as agent.

(5) [~~(4)~~] The cabinet may furnish copies of notices and orders to a person having an interest that [~~which~~] is or may be adversely affected by the coal exploration and reclamation operations or by the surface coal mining and reclamation operations and a person having an interest in the permit or exploration area.

Section 6. Expiration. (1)(a) Except as provided in subsection (2) of this section, if a notice of noncompliance and order for remedial measures or an order for cessation and immediate compliance requires cessation of coal removal expressly or by implication, the notice or order shall expire thirty (30) days after it is served unless an informal hearing is held at or near the mine site or the exploration site within that time except that notices or orders shall not expire if the condition, practice, or violation in question has been abated or if the person to whom the notice or order has been issued has waived the informal hearing or has agreed to its postponement.

(b) Expiration of the notice or order shall not affect the rights of the cabinet to assess appropriate penalties and to impose applicable sanctions with respect to the time period during which the notice or order was in effect for the violations for which the notice or order was issued. The granting or waiver of an informal public hearing shall not affect the right of a person to an administrative hearing.

(2)(a) The informal public hearing shall [~~will~~] be [~~deemed~~] waived if the person to whom the notice or order was issued is informed by written notice served in the manner provided in paragraph (b) of this subsection that he shall [~~will~~] be deemed to have waived an informal public hearing unless the hearing is requested within thirty (30) days after service of the notice, and an informal public hearing is not requested within that time.

(b) The written notice referred to in paragraph (a) of this subsection shall be delivered by an authorized representative or sent by certified mail, return receipt requested, no later than five (5) days after the notice or order is served.

(c) The person to whom the notice or order is issued shall be deemed to have consented to an extension of the time for holding the informal public hearing if the request is received on or after the 21st day after service of the notice or order. The extension of time shall be equal to the number of days elapsed after the 21st day.

(3)(a) The cabinet shall give as much advance notice as is practicable of the time, place, and subject matter of the informal public hearing to the person to whom the notice or order was is-

sued, and the [~~a~~] person who filed a report that [~~which~~] led to the issuance of the notice or order.

(b) The cabinet shall also post notice of the informal public hearing at the department's regional office for the mine site and, if practicable, publish it in a newspaper of general circulation in the area of the mine.

(4) Requirements for administrative hearings shall not govern informal public hearings. An informal public hearing shall be conducted by a representative of the cabinet who shall [~~may~~] accept oral or written arguments and other relevant information from a [~~any~~] person attending.

(5) Within five (5) days after the close of the informal public hearing, the cabinet shall affirm, modify, or vacate in writing the notice or order. The decision shall be sent to the person to whom the notice or order was issued, and a [~~any~~] person who filed a report that [~~which~~] led to the issuance of the notice or order.

(6) The person conducting the informal public hearing for the cabinet shall determine if the mine site shall be viewed during the informal public hearing. In making this determination the only consideration shall be if [~~whether~~] viewing the mine site will assist the person conducting the informal public hearing in reviewing the appropriateness of the enforcement action or of the required remedial action.

Section 7. Suspension and Revocation of Permits and Exploration Approvals. (1) The cabinet may initiate:

(a) Administrative hearings for suspension or revocation of permits, coal exploration and reclamation approvals;

(b) Administrative hearings for bond forfeitures; and

(c) Administrative hearings or judicial proceedings for other appropriate relief.[~~administrative hearings for suspension or revocation of permits and coal exploration and reclamation approvals, may initiate administrative hearings for bond forfeitures, and may initiate administrative hearings or judicial proceedings for other appropriate relief.~~]

(2) If the cabinet revokes or suspends the permit or exploration approval, surface coal mining operations on the permit area or disturbances on the exploration area shall immediately cease, and the permittee or person conducting coal exploration operations shall:

(a) Complete reclamation within the time specified in the order, if the permit or exploration approval is revoked; or

(b) Complete all affirmative obligations to abate all conditions, practices, and violations as specified in the order, if the permit or exploration approval is suspended.[~~If the permit or exploration approval is revoked, complete reclamation within the time specified in the order; or~~

~~(b) If the permit or exploration approval is suspended, complete all affirmative obligations to abate all conditions, practices, and violations as specified in the order.~~]

Section 8. Pattern of Violations. (1) If the cabinet determines that a pattern of violations of the requirements of KRS Chapter 350, the administrative regulations, or a permit condition imposed under KRS Chapter 350 or administrative regulations exists or has existed and that the violations are caused by the unwarranted failure of the permittee or were willful violations, the cabinet shall issue an order to the permittee to show cause why the permit should not be suspended or revoked.

(2) The cabinet may determine that a pattern of violations exists or has existed, based on two (2) or more inspections of the permit area within any twelve (12) month period, after considering the circumstances, including:

(a) The number of violations, cited on more than one (1) occasion, of the same or related requirements of KRS Chapter 350; 405 KAR Chapters 7 through 24; or permit conditions;

(b) The number of violations, cited on more than one (1) occasion, of different requirements of KRS Chapter 350; 405 KAR Chapters 7 through 24; or permit conditions; and

(c) The extent to which the violations were isolated departures from lawful conduct.

(3) The cabinet shall promptly review the history of violations of a permittee who has been cited for violations of the same or related requirements of KRS Chapter 350; 405 KAR Chapters 7 through 24 or permit conditions during three (3) or more inspections of the permit area within any twelve (12) month period. If after the review the cabinet determines that a pattern of violations exists or has existed, the cabinet shall issue a show cause order pursuant to this section and 405 KAR 7:092, Section 10.

(4) In determining the number of violations within any twelve (12) month period, the cabinet shall only consider violations cited as a result of inspections carried out on or after May 3, 1978.

(5) If a permittee fails to abate a violation cited in a notice of noncompliance or cessation order within the abatement period established [~~set~~] in the notice of order or as subsequently extended, then the cabinet shall review the permittee's history of violations to determine if [~~whether~~] a pattern of violations exists or has existed pursuant to this section and shall initiate a show cause order as provided in this section and 405 KAR 7:092, Section 10.

Section 9. Inability to Comply. (1) No notice or order issued pursuant to the administrative regulations of 405 KAR may be vacated because of inability to comply.

(2) Inability to comply may not be considered in determining if [~~whether~~] a pattern of violations exists.

(3) Rapid compliance, good faith, diligence, and inability to comply may be considered in mitigation of proposed penalty assessments in accordance with [~~under~~] 405 KAR 7:092.

LEONARD K. PETERS, Secretary

APPROVED BY AGENCY: October 6, 2011

FILED WITH LRC: October 10, 2011 at 10 a.m.

CONTACT PERSON: Michael Mullins, Regulation Coordinator, #2 Hudson Hollow, Frankfort, Kentucky 40601, phone (502) 564-6940, fax (502) 564-5698, email Michael.Mullins@ky.gov

REGULATORY IMPACT ANALYSIS AND TIERING STATEMENT

Contact Person: Michael Mullins

(1) Provide a brief summary of:

(a) What this administrative regulation does: This administrative regulation sets forth various kinds of notices and orders to be issued by authorized representatives of the cabinet.

(b) The necessity of this administrative regulation: This administrative regulation is necessary to provide information to the regulated community on the hearing, notice and the other procedural and due process provisions for the program.

(c) How this administrative regulation conforms to the content of the authorizing statutes: KRS 350.028 authorizes the cabinet to conduct investigations and hearings under the provisions of KRS Chapter 350 or regulations adopted pursuant thereto. This administrative regulation sets forth hearing, notice and other procedural and due process provisions for the permanent regulatory program.

(d) How this administrative regulation currently assists or will assist in the effective administration of the statutes: This administrative regulation assists in the administration of the statutes by establishing the procedures for hearings and notices and other procedural and due process provisions for the permanent regulatory program.

(2) If this is an amendment to an existing administrative regulation, provide a brief summary of:

(a) How the amendment will change this existing administrative regulation: The amendments contained in this administrative regulation are to correct technical drafting issues and to also amend the regulation in response to comments.

(b) The necessity of the amendment to this administrative regulation: The amendments contained in this administrative regulation are to correct technical drafting issues and to also amend the regulation in response to comments.

(c) How the amendment conforms to the content of the authorizing statutes: KRS 350.130 authorizes the cabinet to deliver documents by electronically as a means of service. This amendment places this option in administrative regulation.

(d) How the amendment will assist in the effective administration of the statutes: This amendment will assist in the administration of the statutes by changing the location for holding the hearings and assessments. The amendments contained in this administrative regulation will also correct technical drafting issues and

amend the regulation in response to comments.

(3) List the type and number of individuals, businesses, organizations, or state and local governments affected by this administrative regulation: This administrative regulation could potentially impact any permit holders within the Commonwealth of Kentucky. The average number of permits, based on a ten year average, is 1,083.

(4) Provide an analysis of how the entities identified in question (3) will be impacted by either the implementation of this administrative regulation, if new, or by the change, if it is an amendment, including:

(a) List the actions that each of the regulated entities identified in question (3) will have to take to comply with this administrative regulation or amendment: This amendment is optional and will only require the entities listed in (3) to provide an email address if they are interested in receiving notices by email.

(b) In complying with this administrative regulation or amendment, how much will it cost each of the entities identified in question (3): This cost will vary depending on the number of entities sign up for this service.

(c) As a result of compliance, what benefits will accrue to the entities identified in question (3): The entities which sign up for this service will benefit by receiving enforcement notifications in a timelier manner.

(5) Provide an estimate of how much it will cost the administrative body to implement this administrative regulation:

(a) Initially: There will be no costs to the agency associated with implementation.

(b) On a continuing basis: There will be no continuing costs to the agency.

(6) What is the source of the funding to be used for the implementation and enforcement of this administrative regulation: General Fund dollars will be used to fund this program.

(7) Provide an assessment of whether an increase in fees or funding will be necessary to implement this administrative regulation, if new, or by the change if it is an amendment: There will not be a need to increase fees or funding to administer this administrative regulation.

(8) State whether or not this administrative regulation established any fees or directly or indirectly increased any fees: This administrative regulation will not increase nor does it establish any fees.

(9) TIERING: Is tiering applied? No. The procedures for hearings and penalty assessments will be the same for all entities that are involved in the hearing process.

FISCAL NOTE ON STATE OR LOCAL GOVERNMENT

1. Does this administrative regulation relate to any program, service, or requirements of a state or local government (including cities, counties, fire departments, or school districts)? Yes

2. What units, parts or divisions of state or local government (including cities, counties, fire departments, or school districts) will be impacted by this administrative regulation? The Division of Mine Reclamation and Enforcement as well as the Office of Administrative Hearings.

3. Identify each state or federal statute or federal regulation that requires or authorizes the action taken by the administrative regulation. KRS 350.020, 350.028, 350.050, 350.130, 350.465, 30 C.F.R. Parts 730-733, 735, 840.13-.14, 840.16, 843, 30 U.S.C. 1253, 1255, 1271

4. Estimate the effect of this administrative regulation on the expenditures and revenues of a state or local government agency (including cities, counties, fire departments, or school districts) for the first full year the administrative regulation is to be in effect.

(a) How much revenue will this administrative regulation generate for the state or local government (including cities, counties, fire departments, or school districts) for the first year? This amendment will generate funds by way of a cost savings to the department. The passage of HB 215 from the 2010 Legislative Session dealing with coal related enforcement notifications resulted in a savings to the Division of Mine Reclamation and Enforcement of $25,000.

(b) How much revenue will this administrative regulation generate for the state or local government (including cities, counties, fire departments, or school districts) for subsequent years? Since this proposal is optional it is difficult to predict the savings that could be realized by this amendment because it is uncertain, how many enforcement documents would be sent out under this proposal.

(c) How much will it cost to administer this program for the first year? There are no additional costs associated with this amendment.

(d) How much will it cost to administer this program for subsequent years? There are no additional costs associated with this amendment.

Note: If specific dollar estimates cannot be determined, provide a brief narrative to explain the fiscal impact of the administrative regulation.

Revenues (+/-):This amendment will generate additional savings to the department resulting from sending out enforcement notifications by email.

Expenditures (+/-):

Other Explanation: NA

FEDERAL MANDATE ANALYSIS COMPARISON

1. Federal statute or regulation constituting the federal mandate. 30 C.F.R. 840 and 30 C.F.R. 843.14.

2. State Compliance Standards. KRS 350.990 and KRS 350.130

3. Minimum or uniform standards contained in the federal mandate. The standards within the listed regulations are related to enforcement and service of documents.

4. Will this administrative regulation impose stricter requirements, or additional or different responsibilities or requirements, than those required by the federal mandate. This administrative regulation does not impose stricter standards.

5. Justification for the imposition of the stricter standard, or additional or different responsibilities or requirements. NA

CABINET FOR HEALTH AND FAMILY SERVICES
Office of Health Policy
(Amended After Comments)

900 KAR 6:075. Certificate of Need nonsubstantive review.

RELATES TO: KRS 216B.010, 216B.095, 216B.455, 216B.990

STATUTORY AUTHORITY: KRS 194A.030, 194A.050, 216B.040(2)(a)1

NECESSITY, FUNCTION, AND CONFORMITY: KRS 216B.040(2)(a)1 requires the Cabinet for Health and Family Services to administer Kentucky's Certificate of Need Program and to promulgate administrative regulations as necessary for the program. This administrative regulation establishes the requirements necessary for consideration for nonsubstantive review of applications for the orderly administration of the Certificate of Need Program.

Section 1. Definitions. (1) "Cabinet" is defined by KRS 216B.015(5).

(2) "Certificate of Need Newsletter" means the monthly newsletter that is published by the cabinet regarding certificate of need matters and is available on the Certificate of Need Web site at http://chfs.ky.gov/ohp/con.

(3) "Days" means calendar days, unless otherwise specified.

(4) "Formal review" means the review of applications for certificate of need which are reviewed within ninety (90) days from the commencement of the review as provided by KRS 216B.062(1) and which are reviewed for compliance with the review criteria set forth at KRS 216B.040 and 900 KAR 6:070.(5) "Nonsubstantive review" is defined by KRS 216B.015(17).

(6) "Public information channels" means the Office of Communication and Administrative Review in the Cabinet for Health and Family Services.

(7) "Public notice" means notice given through:

(a) Public information channels; or

(b) The cabinet's Certificate of Need Newsletter.

(8) "Therapeutic cardiac catheterization outcomes" means in hospital mortality rates, door to balloon time, door to balloon time less than or equal to ninety (90) minutes, Percutaneous Coronary Intervention (PCI) related cardiac arrests and emergency open heart surgeries performed as a result of the PCI.

Section 2. Nonsubstantive Review. (1) The cabinet shall grant nonsubstantive review status to applications to change the location of a proposed health facility or to relocate a licensed health facility only if:

1. There is no substantial change in health services or bed capacity; and

2. The change of location or relocation is within the same county**; or**

(b) The change of location is for a psychiatric residential treatment facility[~~; or~~

~~(b) The change of location for a psychiatric residential treatment facility is within the same district as defined in KRS 216B.455 and is to the same campus as a licensed psychiatric residential treatment facility~~].

(2) In addition to the projects specified in KRS 216B.095(3)(a) through (e), pursuant to KRS 216B.095(f), the Office of Health Policy shall grant nonsubstantive review status to an application for which a certificate of need is required if:

(a) The proposal involves the establishment or expansion of a health facility or health service for which there is not a component in the State Health Plan;

(b) The proposal involves an application from a hospital to reestablish the number of acute care beds that it converted to nursing facility beds pursuant to KRS 216B.020(4), if the number of nursing facility beds so converted are delicensed;

(c) The proposal involves an application to relocate or transfer licensed acute care beds, not including neonatal Level III beds, from one (1) existing licensed hospital to another existing licensed hospital within the same area development district and the requirements established in this paragraph are met.

1.a. There shall not be an increase in the total number of licensed acute care beds in that area development district; and

b. The hospital from which the beds are relocated delicenses those beds.

2. If neonatal Level II beds are relocated or transferred pursuant to this paragraph:

a. The receiving hospital shall have an existing licensed Level II or Level III neonatal unit;

b. A minimum of four (4) beds shall be relocated; and

c. The relocation shall not leave the transferring hospital with less than four (4) neonatal Level II beds unless the relocated beds represent all of its neonatal Level II beds;

(d) The proposal involves an application by an existing licensed hospital to:

1. Convert licensed psychiatric or chemical dependency beds to acute care beds, not including special purpose acute care beds such as neonatal Level II beds or neonatal Level III beds;

2. Convert and implement the beds on-site at the hospital's existing licensed facility; and

3. Delicense the same number of psychiatric or chemical dependency beds that are converted.

(e) The proposal involves an application by an existing licensed hospital providing inpatient psychiatric treatment to:

1. Convert psychiatric beds licensed for use with geriatric patients to acute care beds, not including special purpose acute care beds such as neonatal Level II beds or neonatal Level III beds;

2. Implement the beds on-site at the existing licensed hospital; and

3. Delicense the same number of converted beds;

(f) The proposal involves an application to transfer or relocate existing certificate of need approved nursing facility beds between certificate of need approved nursing facilities or from a certificate of need approved nursing facility to a proposed nursing facility and the requirements established in this paragraph are met.

1. The selling or transferring facility has a certificate of need nursing facility bed inventory of at least 250 beds;

2. The transfer or relocation takes place within the same Area Development District;

3. The application includes:

a. A properly completed OHP - Form 9, Notice of Intent to Acquire a Health Facility or Health Service, incorporated by reference in 900 KAR 6: 055; and

b. Evidence of the selling or transferring entity's binding commitment to sell or transfer upon approval of the application; and

4. A certificate of need approved nursing facility shall not sell or transfer more than fifty (50) percent of its certificate of need approved nursing facility beds;

(g) [~~The proposal involves an application to establish a nursing facility with no more than sixty-two (62) nursing facility beds and the requirements established in this paragraph are met.~~

~~1. The applicant is an existing licensed psychiatric hospital operated by the Commonwealth of Kentucky;~~

~~2. The proposed nursing facility shall be located on the psychiatric hospital's campus; and~~

~~3. The letter of intent is filed no later than March 1, 2010 and the application is filed no later than March 31, 2010;~~

~~(h) The proposal involves an application to establish a psychiatric hospital with no more than fifty (50) psychiatric beds and the requirements established in this paragraph are met.~~

~~1. The letter of intent is filed no later than March 1, 2010 and the application is filed no later than March 31, 2010;~~

~~2. The proposed psychiatric hospital shall be located in an area development district (ADD) which does not contain a licensed psychiatric hospital;~~

~~3. The applicant proposes to provide services only to individuals between the ages of four (4) and twenty-one (21);~~

~~4. The patient population to be served shall be limited to children with documented evidence of mental retardation or a developmental disability as defined under 907 KAR 1:145; physical aggression; or inappropriate sexual behavior;~~

~~5. The facility shall not refuse to admit a patient or discharge a patient due to the presence of the characteristics described in subparagraphs 3 and 4 of this paragraph;~~

~~6. The proposed psychiatric hospital shall have on staff a board-eligible or board-certified child psychiatrist who maintains responsibility for admissions and treatment. The board-eligible child psychiatrist shall be a doctor of psychiatry who has been board-certified in general psychiatry by the American Board of Psychiatry and Neurology and has completed a two (2) year fellowship in child psychiatry; and~~

~~7. The application shall include all of the following:~~

~~a. The specific number of psychiatric beds proposed;~~

~~b. An inventory of current psychiatric services in the Area Development District;~~

~~c. Clear admission and discharge criteria;~~

~~d. Linkage agreements with other child and adolescent serving agencies in the proposed service areas, including all regional interagency councils, community mental health centers, the Department for Community Based Services, and major referring school systems. These agreements shall demonstrate a commitment by these agencies and the hospital to joint treatment and discharge planning as appropriate; and~~

~~e. Documentation of linkage agreements for the provision for case management services if necessary after discharge. A case manager:~~

~~(i) May be on the hospital's staff; and~~

~~(ii) Shall be closely involved in cases from treatment planning onward;~~

~~(i)~~] The proposal involves an application to establish a therapeutic cardiac catheterization program and the requirements established in this paragraph are met.

1. The applicant is an acute care hospital which was previously granted a certificate of need to participate in a primary angioplasty pilot project and was evaluated after the first two (2) years of operation by an independent consultant who determined the hospital successfully demonstrated good therapeutic cardiac catheterization outcomes.

2. The applicant shall document that the nursing and technical catheterization laboratory staff are experienced and participate in a continuous call schedule.

3. The applicant shall document that the catheterization labora-

tory shall be equipped with optimal imaging systems, resuscitative equipment, and intra-aortic balloon pump support.

4. The applicant shall document that the cardiac care unit nurses shall be proficient in hemodynamic monitoring and intra-aortic balloon pump management.

5. The applicant shall document formalized written protocols in place for immediate and efficient transfer of patients to an existing licensed cardiac surgical facility.

6. The applicant shall utilize a Digital Imaging and Communications in Medicine (DICOM) standard image transfer system between the hospital and the backup surgical facility.

7. The applicant shall employ an interventional program director who has performed more than 500 primary PCI procedures and who is board certified by the American Board of Internal Medicine in interventional cardiology.

8. The applicant shall document that each cardiologist performing the therapeutic catheterizations shall perform at least seventy-five (75) PCIs per year.

9. The applicant shall document the ability to perform at least 200 interventions per year, with ideal minimum of 400 interventions per year by the end of the second year of operation.

10. The applicant shall participate in the American College of Cardiology National Cardiovascular Data Registry quality measurement program.

11. The applicant shall report therapeutic cardiac catheterization data annually to the Cabinet for Health and Family Services.

12. The application shall document the applicant's ability to produce therapeutic cardiac catheterization outcomes which are within two (2) standard deviations of the national means for the first two (2) consecutive years; or

(h)[~~(j)~~] The proposal involves an application to transfer or relocate existing certificate of need approved nursing facility beds from one (1) long-term care facility to another long-term care facility and the requirements established in this paragraph are met.

1. The selling or transferring facility fails to meet regulations promulgated by the Centers for Medicare and Medicaid Services at 42 C.F.R. 483.70(a)(8) requiring nursing facilities to install sprinkler systems throughout their buildings;

2. The selling or transferring facility may sell or transfer portions of its total bed component to one (1) or more existing nursing facility;

3. The facility acquiring the beds shall be located in a county contiguous to that of the selling or transferring facility;

4. The selling or transferring facility shall be licensed only for nursing facility beds at the time of transfer or application to transfer and shall not sell or transfer more than thirty (30) of its licensed nursing facility beds to an individual facility; and

5. The application shall include a properly completed OHP - Form 9, Notice of Intent to Acquire a Health Facility or Health Service, incorporated by reference in 900 KAR 6:055.

(3) If an application is denied nonsubstantive review status by the Office of Health Policy, the application shall automatically be placed in the formal review process.

(4) If an application is granted nonsubstantive review status by the Office of Health Policy, notice of the decision to grant nonsubstantive review status shall be given to the applicant and all known affected persons.

(5)(a) If an application is granted nonsubstantive review status by the Office of Health Policy, any affected person who believes that the applicant is not entitled to nonsubstantive review status or who believes that the application should not be approved may request a hearing by filing a request for a hearing within ten (10) days of the notice of the decision to conduct nonsubstantive review.

(b) The provisions of 900 KAR 6:090 shall govern the conduct of all nonsubstantive review hearings.

(c) Nonsubstantive review applications shall not be comparatively reviewed but may be consolidated for hearing purposes.

(6) If an application for certificate of need is granted nonsubstantive review status by the Office of Health Policy, there shall be a presumption that the facility or service is needed and applications granted nonsubstantive review status by the Office of Health Policy shall not be reviewed for consistency with the State Health Plan.

(7) Unless a hearing is requested pursuant to 900 KAR 6:090, the [~~The~~] Office of Health Policy [~~cabinet~~] shall approve applications for certificates of need that have been granted nonsubstantive review status [~~by the Office of Health Policy~~] if:

(a) The application does not propose a capital expenditure; or

(b) The application does propose a capital expenditure, and the Office of Health Policy [~~cabinet~~] finds the facility or service with respect to which the capital expenditure proposed is needed, unless the cabinet finds that the presumption of need provided for in subsection (6) of this section has been rebutted by clear and convincing evidence by an affected party.

(8) The cabinet shall disapprove an application for a certificate of need that has been granted nonsubstantive review if the cabinet finds that the:

(a) Applicant is not entitled to nonsubstantive review status; or

(b) Presumption of need provided for in subsection (6) of this section has been rebutted by clear and convincing evidence by an affected party.

(9) A decision to [~~The cabinet shall~~] approve or disapprove an application which has been granted nonsubstantive review status shall be rendered [~~by the Office of Health Policy~~] within thirty-five (35) days of the date [~~that public notice is given~~] that nonsubstantive review status has been granted.

(10) If a certificate of need is disapproved [~~denied~~] following nonsubstantive review, the applicant may:

(a) Request that the cabinet reconsider its decision pursuant to KRS 216B.090 and 900 KAR 6:065;

(b) Request that the application be placed in the next cycle of the formal review process; or

(c) Seek judicial review pursuant to KRS 216B.115.

CARRIE BANAHAN, Executive Director

For JANIE MILLER, Secretary

APPROVED BY AGENCY: October 12, 2011

FILED WITH LRC: October 12, 2011 at 4 p.m.

CONTACT PERSON: Jill Brown, Office of Legal Services, 275 East Main Street 5 W-B, Frankfort, Kentucky 40601, phone 502-564-7905, fax 502-564-7573.

REGULATORY IMPACT ANALYSIS AND TIERING STATEMENT

Contact Persons: Carrie Banahan or Chandra Venettozzi

(1) Provide a brief summary of:

(a) What this administrative regulation does: This administrative regulation establishes the guidelines and considerations for nonsubstantive review of applications for the certificate of need program.

(b) The necessity of this administrative regulation: This administrative regulation is necessary to comply with the content of the authorizing statute, KRS 194A.030, 194A.050, 216B.040(2)(a)1.

(c) How this administrative regulation conforms to the content of the authorizing statutes: This administrative regulation conforms to the content of KRS 194A.030, 194A.050, 216B.040(2)(a)1 by establishing the considerations for nonsubstantive review of certificate of need applications

(d) How this administrative regulation currently assists or will assist in the effective administration of the statutes: This administrative regulation assists in the effective administration of KRS 194A.030, 194A.050, 216B.040(2)(a)1 by establishing the considerations for nonsubstantive review of certificate of need applications.

(2) If this is an amendment to an existing administrative regulation, provide a brief summary of:

(a) How the amendment will change this existing administrative regulation: The amendment will delete language that is no longer needed such as establishment of a nursing facility with no more than sixty-two nursing facility beds. As mental health districts previously defined in KRS 216B.455 no longer exist, that language has been deleted and has been replaced with language to all psychiatric residential treatment facilities to change location using the nonsubstantive review process. The amendment will also provide flexibility so that decisions to approve or disapprove applications for certificate of need may be signed by the Executive Director of the Office of Health Policy.

(b) The necessity of the amendment to this administrative

regulation: This amendment is necessary to eliminate unnecessary language and provide more flexibility so that decisions to approve or disapprove applications for certificate of need may be signed by the Executive Director of the Office of Health Policy.

(c) How the amendment conforms to the content of the authorizing statutes: The amendment carries out the requirement of KRS 194A.030, 194A.050, 216B.040(2)(a)1 by establishing the considerations for nonsubstantive review of certificate of need applications.

(d) How the amendment will assist in the effective administration of the statutes: This amendment will provide more flexibility so that decisions to approve or disapprove applications for certificate of need may be signed by the Executive Director of the Office of Health Policy.

(3) List the type and number of individuals, businesses, organizations, or state and local governments affected by this administrative regulation: This administrative regulation affects an entity wishing to file a certificate of need application. Approximately 100 entities file a certificate of need application each year.

(4) Provide an analysis of how the entities identified in question (3) will be impacted by either the implementation of this administrative regulation, if new, or by the change, if it is an amendment, including:

(a) List the actions that each of the regulated entities identified in question (3) will have to take to comply with this administrative regulation or amendment: As the considerations for nonsubstantive review of certificate of need applications set forth in the administrative regulation are currently established and operational, no new action will be required of regulated entities to comply with this regulation.

(b) In complying with this administrative regulation or amendment, how much will it cost each of the entities identified in question (3): As the considerations for nonsubstantive review of certificate of need applications set forth in the administrative regulation are currently established and operational, no cost will be incurred by regulated entities to comply with this regulation.

(c) As a result of compliance, what benefits will accrue to the entities identified in question (3): This administrative regulation will provide potential health care providers with a mechanism to establish health care facilities and services in compliance with KRS 216B and will provide more flexibility so that decisions to approve or disapprove applications for certificate of need may be signed by the Executive Director of the Office of Health Policy.

(5) Provide an estimate of how much it will cost the administrative body to implement this administrative regulation:

(a) Initially: No cost

(b) On a continuing basis: No cost

(6) What is the source of the funding to be used for the implementation and enforcement of this administrative regulation: No funding is necessary since there is no cost to implementing this administrative regulation.

(7) Provide an assessment of whether an increase in fees or funding will be necessary to implement this administrative regulation, if new, or by the change if it is an amendment: No increase in fees or funding is necessary.

(8) State whether or not this administrative regulation established any fees or directly or indirectly increased any fees: This administrative regulation does not establish any fees and does not increase any fees either directly or indirectly.

(9) TIERING: Is tiering applied? Tiering was not appropriate in this administrative regulation because the administrative regulation applies equally to all those individuals or entities regulated by it. Disparate treatment of any person or entity subject to this administrative regulation could raise questions of arbitrary action on the part of the agency. The "equal protection" and "due process" clauses of the Fourteenth Amendment of the U.S. Constitution may be implicated as well as Sections 2 and 3 of the Kentucky Constitution.

FISCAL NOTE ON STATE OR LOCAL GOVERNMENT

1. Does this administrative regulation relate to any program, service, or requirements of a state or local government (including cities, counties, fire departments, or school districts)? Yes

2. What units, parts or divisions of state or local government (including cities, counties, fire departments, or school districts) will be impacted by this administrative regulation? This amendment may impact any government owned, controlled or proposed healthcare facilities or services as well as the Office of Health Policy within the Cabinet for Health and Family Services.

3. Identify each state or federal statute or federal regulation that requires or authorizes the action taken by the administrative regulation. KRS 194A.030, 194A.050, 216B.040(2)(a)1.

4. Estimate the effect of this administrative regulation on the expenditures and revenues of a state or local government agency (including cities, counties, fire departments, or school districts) for the first full year the administrative regulation is to be in effect. None.

(a) How much revenue will this administrative regulation generate for the state or local government (including cities, counties, fire departments, or school districts) for the first year? No impact to revenues.

(b) How much revenue will this administrative regulation generate for the state or local government (including cities, counties, fire departments, or school districts) for subsequent years? No revenues will be generated to state or local government.

(c) How much will it cost to administer this program for the first year? None.

(d) How much will it cost to administer this program for subsequent years? None.

Note: If specific dollar estimates cannot be determined, provide a brief narrative to explain the fiscal impact of the administrative regulation.

Revenues (+/-): None

Expenditures (+/-): None

Other Explanation: None

PERSONNEL BOARD
(Amendment)

101 KAR 1:365. Appeal and hearing procedures.

RELATES TO: KRS Chapter 13B, 18A.075, 18A.0751, 18A.095

STATUTORY AUTHORITY: KRS 18A.0751

NECESSITY, FUNCTION, AND CONFORMITY: KRS 18A.075 provides that the Personnel Board shall promulgate comprehensive administrative regulations consistent with the provisions of KRS 18A.005 to 18A.200. KRS 18A.0751 provides that the Personnel Board shall promulgate comprehensive administrative regulations providing for the procedures to be utilized by the board in the conduct of hearings. This administrative regulation establishes Personnel Board hearing procedures.[~~Section 1. Definitions. (1) "Because of sex" or "on the basis of sex" is defined by KRS 344.030(8).~~

~~(2) "Qualified individual with a disability" is defined by KRS 344.030(1).~~

~~(3) "Reasonable accommodation" is defined by KRS 344.030(6).~~

~~(4) "Religion" is defined by KRS 344.030(7).~~

~~(5) "Undue hardship" is defined by KRS 344.030(9).~~

~~Section 2. An appeal of an action alleged to be based on discrimination shall be governed by the terms defined in Section 1 of this administrative regulation.~~]

Section 1[~~3~~]. Filing.[~~(1) An appeal or a document relating to an appeal shall be filed with the Personnel Board through the office of the executive director within the time period set forth in KRS 18A.095 after receiving notification of the penalization or after becoming aware of the penalization through the exercise of due diligence.~~]

(1)[~~(2)~~](a) An appeal, motion, request, objection, exception, response, witness list or other document may be filed by a party with the board by means of electronic[~~facsimile~~] transmission.

(b) If a party transmits a document to the board by electronic[~~facsimile~~] transmission, he shall attempt to transmit the document to all parties by electronic[~~facsimile~~] transmission.

(2)[~~(3)~~] To be timely filed, a document transmitted electronically[~~by facsimile~~] shall be received by the board within the statutory or regulatory times specified for filing and be received by the board no later than midnight on the last day for filing.

(3)[~~(4)~~] The original of a document transmitted electronically shall be maintained by the filing party and shall be produced upon request of the hearing officer.[~~a facsimile transmission shall be received by the Personnel Board no later than three (3) business days after transmission or the document transmitted shall be voided unless good cause is shown~~.]

(4)[~~(5)~~] The date of filing of a document attempted to be filed by electronic [~~facsimile~~] transmission shall be the date the original of the document was received by the board, if the board fails to receive the electronic [~~facsimile~~] transmission.

(5)[~~(6)~~] A state employee shall limit the use of [~~not use~~] state time, equipment, materials, or personnel in pursuing an appeal. Any limited use shall have the approval of the hearing officer, Board staff, agency counsel or supervisor.

(6)[~~(7)~~] Evidentiary hearings shall be held in Frankfort, Kentucky. Pre-hearing conferences may be held telephonically at the discretion of the hearing officer.[~~An appeal shall be heard in Frankfort, Kentucky~~.]

Section 2.[~~4.~~] Designation of Hearing Officer. (1) Unless otherwise directed by the board, the executive director shall assign a hearing officer or officers to an appeal.

(2) If more than one (1) hearing officer is assigned, one (1) shall be designated as chief hearing officer.

(3) If an appeal will be heard by the full board, the chairman of the board shall serve as the chief hearing officer.

Section 3.[~~5.~~] Continuances. (1) A continuance of a scheduled hearing may be granted by a hearing officer for good cause.

(2) A request for a continuance shall:

(a) Be written, unless all parties agree by telephonic conference with the hearing officer or scheduling clerk;

(b) State the reason for the request;

(c) Include proposed dates for rescheduling the hearing;

(d) Be filed with the board; and

(e) Be transmitted[~~mailed~~] to all parties at least five (5)[~~ten (10)~~] days prior to the scheduled hearing, if possible.

(3) An objection to a request for a continuance shall:

(a) Be written, if possible;

(b) State the reason for the objection to the request for continuance;

(c) Be filed with the board; and

(d) Be transmitted[~~mailed~~] to all parties at least three (3)[~~five (5)~~] days prior to the scheduled hearing.

(4)(a) At the direction of the hearing officer, the executive director shall execute and transmit to all parties an interim order either granting or denying the request for continuance[~~(b) If the request for continuance is granted, the interim order shall state the date on which the hearing has been rescheduled or that the hearing has been continued generally.~~]

Section 4.[~~6.~~] Prehearing Procedures. (1) A motion, request or filing shall be in writing, filed with the board through the office of the executive director, and served on all parties.

(2) Unless an interim order provides for review by the board prior to the conclusion of a hearing, the board may[~~shall~~] review an interim order when it considers the recommended order, record, and exceptions.

(3) If an employee retains counsel subsequent to filing his appeal, his attorney shall file a written entry of appearance.

(4) An employee shall notify all parties and the board in writing of a change of address.

(5)(a) A Kentucky Personnel Board subpoena form shall be available in the office of the executive director and shall be issued by the executive director.

(b) Preparation and service of the subpoena and compliance with the subpoena shall be the responsibility of the party requesting the subpoena.

(6) A deposition may be taken in an extraordinary circumstance and upon authorization by the hearing officer. A request to take a deposition shall be filed at least fifteen (15) days prior to the scheduled hearing. An objection to the request shall be filed prior to the scheduled hearing.

(7) Upon order of[~~agreement of all parties and approval by~~] the hearing officer, with approval of the Executive Director or the General Counsel, two (2) or more appeals which involve the same or similar facts may be consolidated. Upon motion of a party, or upon his own motion, the hearing officer may join other parties as necessary to appropriately consider the matter.

(8) An agreed settlement shall be submitted in writing for review and final action by the board.

Section 5[~~7~~]. Conduct of Hearing. (1) Unless the appeal is heard by the full board, the hearing officer assigned shall hear the appeal.

(2) A party shall provide four (4) copies of an exhibit that is to be introduced as evidence. Copies shall be prepared prior to the hearing.

Section 6.[~~8.~~] Board Review and Action. (1) A response to a written exception to a recommended order may be filed by a party within fifteen (15)[~~five (5)~~] days after the date the written exception is filed with the board. A response shall be:

(a) In writing; and

(b) Served on all parties.

(2) At the request of a party or on its own motion, the board may permit oral arguments before the full board. A request for oral argument shall be:

(a) In writing; and

(b) Filed with the board within fifteen (15) days of issuance of a recommended order.

(3) A final order shall be prepared, executed and entered at the direction of the board by the secretary to the board.

Section 7. Interim and Recommended Orders (1) Interim and Recommended Orders shall be signed by one of the following:

(a) Executive Director;

(b) General Counsel;

(c) assigned Hearing Officer.

Section 8.[9.] Incorporation by Reference. (1) The following forms are incorporated by reference:

(a) "Kentucky Personnel Board Appeal Form (11-2011)[(12-15-94)]"; and

(b) "Kentucky Personnel Board Subpoena Form (2-90)".

(2) These forms may be inspected, copied or obtained at the office of the Personnel Board, 28 Fountain Place, Frankfort, Kentucky 40601, Monday through Friday, 8 a.m. to 4:30 p.m.

MARK A. SIPEK, Executive Director

APPROVED BY AGENCY: October 14, 2011

FILED WITH LRC: October 14, 2011 at noon

PUBLIC HEARING AND PUBLIC COMMENT PERIOD: A public hearing on this administrative regulation shall be held on November 21, 2011, at 9:00 a.m. at the Kentucky Personnel Board, 28 Fountain Place, Frankfort, Kentucky. Individuals interested in being heard at this hearing shall notify this agency in writing by November 14, 2011, five workdays prior to the hearing, of their intent to attend. If no notification of intent to attend the hearing is received by that date, the hearing may be canceled. The hearing is open to the public. Any person who wishes to be heard will be given an opportunity to comment on the proposed administrative regulation. A transcript of the public hearing will not be made unless a written request for a transcript is made. If you do not wish to be heard at the public hearing, you may submit written comments on the proposed administrative regulation. Written comments shall be accepted until close of business November 30, 2011. Send written notification of intent to be heard at the public hearing or written comments to:

CONTACT PERSON: Boyce A. Crocker, General Counsel, Personnel Board, 28 Fountain Place, Frankfort, Kentucky 40601, phone (502) 564-7830, fax (502) 564-1693.

REGULATORY IMPACT ANALYSIS AND TIERING STATEMENT

Contact person: Boyce A. Crocker

(1) Provide a brief summary of:

(a) What this administrative regulation does: The regulation sets forth the procedures for employees to file appeals and for the Personnel Board to conduct hearings and issue interim, recommended and final orders.

(b) The necessity of this administrative regulation: To establish the procedures for appeals, hearings and orders.

(c) How this administrative regulation conforms to the content of the authorizing statutes: KRS 18A.0751(1) requires the Personnel Board to promulgate an administrative regulation for conduct of hearings and appeals.

(d) How this administrative regulation currently assists or will assist in the effective administration of the statutes: The regulation sets forth various rules for hearings at the Personnel Board.

(2) If this is an amendment to an existing administrative regulation, provide a brief summary of:

(a) How the amendment will change this existing administrative regulation: The proposed amendment removes duplicative and confusing language from the former "Definitions" section of the regulation. The proposed amendment also makes clear that pre-hearing conferences may be held telephonically at the discretion of the Hearing Officer, but that evidentiary hearings must be held in Frankfort. The proposed amendment also adds language to make it easier for parties to request a continuance and to allow a Hearing Officer to consolidate appeals which involve the same or similar facts. The proposed amendment also sets forth who has the authority to sign interim and recommended orders. Finally, the proposed amendment revises the Kentucky Personnel Board Appeal Form which has not been changed in seventeen years. The one revision to the form, especially of note, is to remove the social security number.

(b) The necessity of the amendment to this administrative regulation: To make it easier to understand the regulation regarding hearing procedures, to make administration and scheduling of appeals easier and to update the Appeal Form to not have the social security number.

(c) How the amendment conforms to the content of the authorizing statutes: The amendment further refines and makes clear hearing procedures at the Personnel Board and allows greater ease in scheduling and resolving employee appeals. It complies with statutory requirement set forth at KRS 18A.0751.

(d) How the amendment will assist in the effective administration of the statutes: As noted above, this amendment removes duplicative and confusing language, makes it easier to conduct pre-hearing conferences, to schedule appeals and to consolidate appeals. The removal of the employee's or Appellant's social security number from the Appeal Form will help to protect privacy.

(3) List the type and number of individuals, businesses, organizations, or state and local governments affected by this administrative regulation: All employees subject to the provisions of KRS 18A and those agencies that employ KRS 18A employees.

(4) Provide an analysis of how the entities identified in question (3) will be impacted by either the implementation of this administrative regulation, if new, or by the change, if it is an amendment, including:

(a) List the actions that each of the regulated entities identified in question (3) will have to take to comply with this administrative regulation or amendment: None

(b) In complying with this administrative regulation or amendment, how much will it cost each of the entities identified in question (3): None

(c) As a result of compliance, what benefits will accrue to the entities identified in question (3): Employees appealing to the Personnel Board will no longer need to reveal their social security number to file an appeal. It is made explicit that pre-hearing conferences may be held by telephone which will benefit both employees and agencies.

(5) Provide an estimate of how much it will cost the administrative body to implement this administrative regulation:

(a) Initially: None

(b) On a continuing basis: None

(6) What is the source of the funding to be used for the implementation and enforcement of this administrative regulation: Not applicable.

(7) Provide an assessment of whether an increase in fees or funding will be necessary to implement this administrative regulation, if new, or by the change if it is an amendment: Not applicable.

(8) State whether or not this administrative regulation established any fees or directly or indirectly increased any fees: This administrative regulation does not establish or increase any fees.

(9) TIERING: Is tiering applied? This regulation must apply equally to all classified employees in all state agencies with classified employees.

FISCAL NOTE ON STATE OR LOCAL GOVERNMENT

Contact Person: Boyce A. Crocker

1. Does this administrative regulation relate to any program, service or requirements of a state or local government (including cities, counties, fire department, or school districts)? Yes

2. What units, parts or divisions of state or local government (including cities, counties, fire department, or school districts) will be impacted by this administrative regulation?

3. Identify each state or federal statute or federal regulation that requires or authorizes the action taken by the administrative regulation.

4. Estimate the effect of this administrative regulation on the expenditures and revenues of a state or local government agency (including cities, counties, fire department, or school districts) for the first full year the regulation is to be in effect.

(a) How much revenue will this administrative regulation generate for the state or local government (including cities, counties, fire department, or school districts) for the first year?

(b) How much revenue will this administrative regulation generate for the state or local government (including cities, counties, fire department, or school districts) for subsequent years?

(c) How much will it cost to administer this program for the first year?

(d) How much will it cost to administer this program for subsequent years?

Note: If specific dollar estimates cannot be determined, provide a brief narrative to explain the fiscal impact of the administrative regulation.

Revenues (+\–):

Expenditures (+\–):

Other Explanation:

FINANCE AND ADMINISTRATION CABINET
Department of Revenue
Office of Sales and Excise Taxes
(**Amendment)**

103 KAR 3:020. Sales and telecommunications forms manual.

RELATES TO: KRS 61.870-61.884, 131.010-131.130, 131.150-131.240, 134.580, 136.600-136.660, 139.010-139.795, 144.132, 144.137, 154.20-206, 160.613-160.617, 224.01-310, 247.920

STATUTORY AUTHORITY: KRS 131.130(3)

NECESSITY, FUNCTION, AND CONFORMITY: KRS 131.130(3) authorizes the Department of Revenue to prescribe forms necessary for the administration of any revenue law by the promulgation of an administrative regulation incorporating the forms by reference. This administrative regulation incorporates by reference the required Revenue Forms used in the administration of Sales and Use Taxes and Telecommunications Excise and Gross Revenues Tax by the Department of Revenue.

Section 1. Sales and Use Tax - Required Forms.

(1) Revenue Form 51A101(a), Sales and Use Tax Permit, shall be conspicuously displayed by the sales and use tax permit holder at the location for which the permit was issued.

(2) Revenue Form 51A101(b), Sales and Use Tax Permit Update, shall be issued by the Department of Revenue to update the Sales and Use Tax Permit with business name and address change information.

(3) Revenue Form 51A101(c)(1), Kentucky Streamlined Sales and Use Tax (SST) Filing Permit, shall be issued to Model 1 Streamlined Sales and Use Tax filers registered in Kentucky and shall be conspicuously displayed by the SST permit holder at the location for which the permit was issued.

(4) Revenue Form 51A101(c)(2), Kentucky Streamlined Sales and Use Tax (SST) Filing Permit, shall be issued to Model 2 Streamlined Sales and Use Tax filers registered in Kentucky and shall be conspicuously displayed by the SST permit holder at the location for which the permit was issued.

(5) Revenue Form 51A101(c)(4), Kentucky Streamlined Sales and Use Tax (SST) Filing Permit, shall be issued to Model 4 Streamlined Sales and Use Tax filers registered in Kentucky and shall be conspicuously displayed by the SST permit holder at the location for which the permit was issued.

(6) Revenue Form 51A101(d), Sales and Use Tax Permit Update (SST), shall be issued by the Department of Revenue to update the Kentucky Streamlined Sales and Use Tax (SST) Filing Permit with business name and address change information.

(7) Revenue Form 51A102, Kentucky Sales and Use Tax Worksheet, shall be submitted to the Department of Revenue by a Kentucky sales and use tax permit holder to report total receipts, itemized deductions, amount subject to Kentucky use tax and total amount of Kentucky sales and use tax due for a particular reporting period.

(8) Revenue Form 51A102E, Kentucky Sales and Use Tax Worksheet - Electronic Funds Transfer, shall be submitted to the Department of Revenue by a Kentucky sales and use tax permit holder who remits payment via electronic funds transfer to report total receipts, itemized deductions, amount subject to Kentucky use tax and total amount of Kentucky sales and use tax due for a particular reporting period.

(9) Revenue Form 51A103, Kentucky Accelerated Sales and Use Tax Worksheet, shall be completed by a Kentucky sales and use tax permit holder who has been designated as an accelerated filer to report total receipts, itemized deductions, amount subject to use tax, and total amount of sales and use tax due.

(10) Revenue Form 51A103E, Kentucky Accelerated Sales and Use Tax Worksheet - Electronic Funds Transfer, shall be submitted on a monthly basis by a Kentucky sales and use tax permit holder to report total receipts, itemized deductions, amount subject to use tax, and total amount of sales and use tax due on an accelerated basis and remitted via electronic funds transfer.

(11) Revenue Form 51A105, Resale Certificate, shall be presented to a seller by a Kentucky sales and use tax permit holder to claim that the tangible personal property or digital property purchased from the seller will be:

(a) Resold in the regular course of business;

(b) Leased or rented; or

(c) Used as raw material, industrial supply or industrial tool.

(12) Revenue Form 51A109, Application for Energy Direct Pay Authorization (Sales and Use Tax and Utility Gross Receipts License Tax), shall be filed with the Department of Revenue by a manufacturer, processor, miner or refiner to apply for an energy direct pay authorization.

(13) Revenue Form 51A110, Direct Pay Authorization, shall be presented to a Kentucky sales and use tax permit holder by a company authorized to report and pay directly to the Department of Revenue the sales or use tax on all purchases of tangible personal property, or digital property excluding energy and energy-producing fuels.

(14) Revenue Form 51A111, Certificate of Exemption Machinery for New and Expanded Industry, shall be presented to a Kentucky sales and use tax permit holder by a manufacturer or production processor to claim exemption from sales and use tax.

(15) Revenue Form 51A112, Application for Direct Pay Authorization, shall be submitted by a registered sales and use tax permit holder wishing to obtain a direct pay authorization.

(16) Revenue Form 51A113, Kentucky Consumer's Use Tax Worksheet, shall be completed by a registered consumer's use tax permit holder and submitted to the Department of Revenue on a regular basis to report the amount of purchases of tangible personal property or digital property subject to Kentucky use tax.

(17) Revenue Form 51A113(O), Consumer's Use Tax Return, shall be completed by a person storing, using, or otherwise consuming tangible personal property or digital property in Kentucky who is not registered for a consumer's use tax permit number.

(18) Revenue Form 51A115, Order for Selected Sales and Use Tax Publications, shall be presented to the Department of Revenue by anyone who wishes to order selected sales and use tax forms and regulations.

(19) Revenue Form 51A116, Use Tax Compliance Inquiry Worksheet, shall be completed by a purchaser of Watercraft, Aircraft, or other tangible or digital property to document if the purchase of the property is subject to the Kentucky Use Tax.

(20) Revenue Form 51A125, Application for Purchase Exemption Sales and Use Tax, shall be presented to the Department of Revenue by a resident 501C(3) charitable, educational, or religious institution; historical sites; and units of federal, state or local governments to apply for a sales and use tax exemption on purchases of tangible personal property, digital property, or certain services to be utilized in the exempt entity's function.

(21) Revenue Form 51A126, Purchase Exemption Certificate, shall be presented to a retailer by a resident charitable, educational or religious institution or Kentucky historical site to claim exemption from sales and use tax on purchases of tangible personal property, digital property, or services.

(22) Revenue Form 51A127, Out-of-State Purchase Exemption Certificate, shall be presented to a retailer by an out-of-state agency or institution that is qualified for exemption in their state of resi-

dence.

(23) Revenue Form 51A128, Solid Waste Recycling Machinery Exemption Certificate, shall be presented to a retailer by a business or organization that claims exemption from sales and use tax on the purchase, lease or rental of machinery or equipment to be primarily used for recycling purposes to collect, source separate, compress, bale, shred or otherwise handle waste material.

(24) Revenue Form 51A129, Kentucky Sales and Use Tax Energy Exemption Annual Return, shall be submitted to the Department of Revenue by an energy direct pay holder to reconcile the actual amount of sales and use tax due on purchases of energy and energy-producing fuels to the total amount of sales and use tax paid based upon previous estimates of tax due.

(25) Revenue Form 51A130, Kentucky Sales and Use Tax Monthly Aviation Fuel Tax Credit Schedule of Qualified Certificated Air Carriers, shall be completed by a qualified certificated air carrier on a monthly basis to claim an aviation fuel tax credit against the company's sales and use tax liability for the month.

(26) Revenue Form 51A131, Kentucky Sales and Use Tax Monthly Aviation Fuel Dealer Supplementary Schedule, shall be completed by aviation fuel dealers selling aviation fuel in order to determine the sales and use tax collected and remitted on the sale of aviation fuel, including jet fuel.

(27) Revenue Form 51A132, Kentucky Sales and Use Tax Equine Breeders Supplementary Schedule, shall be completed by an equine breeder to report taxable receipts from equine breeding fees.

(28) Revenue Form 51A135, Kentucky Sales Tax Motor Vehicle Sales Supplementary Schedule, shall be completed by motor vehicle dealers who collect Kentucky sales tax on the sale of motor vehicles to residents of states who subject Kentucky residents to sales upon the purchase of motor vehicles in their states.

(29) Revenue Form 51A143, Purchase Exemption Certificate - Watercraft Industry, shall be presented to a retailer by a purchaser to claim exemption from sales and use tax on the purchase of tangible personal property that will be used for the direct operation of watercraft in the activity of transporting property or in conveying persons for hire.

(30) Revenue Form 51A149, Certificate of Exemption for Pollution Control Facilities, shall be presented to a retailer by a holder of a pollution control tax exemption certificate or jointly by a contractor and the holder of a pollution control tax exemption certificate to claim exemption from sales and use tax on the purchase of materials and equipment that will become part of a certified pollution control facility.

(31) Revenue Form 51A150, Aircraft Exemption Certificate, shall be presented to a retailer by a purchaser to claim exemption from sales and use tax on the purchase of aircraft, repair and replacement parts for the aircraft, and supplies that will be used for the direct operation of aircraft in interstate commerce and used exclusively for the conveyance of property or passengers for hire.

(32) Revenue Form 51A154, Certificate of Exemption Out-of-State Delivery for Aircraft, All Terrain Vehicle (ATV), Mobile/Manufactured Homes, Campers, Boats, Motors or Trailers, shall be completed in triplicate by the seller and buyer when the sale of the tangible personal property occurs and the seller makes delivery of the tangible personal property out of state, and also completes the affidavit portion of the form within two (2) days of the time of delivery to claim that the property was purchased exempt from sales tax and delivered immediately out of state not to return to Kentucky for use.

(33) Revenue Form 51A157, Certificate of Exemption - Water Used in Raising Equine, shall be presented to a retailer by a person regularly engaged in raising equine as a business to claim exemption for the purchase of water used to raise equine.

(34) Revenue Form 51A158, Farm Exemption Certificate, shall be presented to a retailer by a person regularly engaged in the occupation of tilling and cultivating the soil for the production of crops, raising and feeding livestock or poultry; or raising and feeding llamas, alpacas, ratites, buffalo, aquatic organisms, or cervids to claim exemption from sales and use tax on the purchase of certain tangible personal property.

(35) Revenue Form 51A159, On-Farm Facilities Certificate of Exemption for Materials, Machinery and Equipment, shall be presented to a retailer by a farmer or jointly by a farmer and a contractor to claim exemption from sales and use tax on the purchase of materials, machinery and equipment which will be incorporated into the construction, repair, or renovation of on-farm facilities exempt under the provisions of KRS 139.480.

(36) Revenue Form 51A160, Application for Truck Part Direct Pay Authorization, shall be filed with the Department of Revenue by the owner of a motor vehicle, including a towed unit, qualifying for the repair and replacement part exemption provided under KRS 139.480(32)(a) to apply for the truck part direct pay authorization.

(37) Revenue Form 51A161, Truck Part Direct Pay Authorization, shall be issued by the Department of Revenue to authorize motor carriers to report and pay directly to the department the sales and use tax on all purchases of repair and replacement parts for motor vehicles and to authorize retailers to sell motor vehicle repair and replacement parts directly to the authorized motor carrier without receipt of sales and use tax.

(38) Revenue Form 51A163, Application for Charter Bus Part Direct Pay Authorization, shall be filed with the Department of Revenue by the owner of a charter bus qualifying for the repair and replacement part exemption provided under KRS 139.480(32)(b) to apply for a charter bus direct pay authorization.

(39) Revenue Form 51A164, Charter Bus Direct Pay Authorization, shall be issued by the Department of Revenue to authorize charter bus carriers to report and pay directly to the Department the sales and use tax on all purchases of repair and replacement parts for charter buses, and to authorize retailers to sell charter bus repair and replacement parts directly to the charter bus carriers without receipt of sales and use tax.

(40) Revenue Form 51A200, Application for Kentucky Enterprise Initiative Act (KEIA) Tax Refund Program, shall be used by qualified businesses to apply for a refund of sales and use tax paid on purchases of materials used in an approved project.

(41) Revenue Form 51A205, Kentucky Sales and Use Tax Instructions, shall be used by Kentucky sales and use tax permit holders as a guide in filing their sales and use tax returns and maintaining permit account information.

(42) Revenue Form 51A209, Sales and Use Tax Refund Application, shall be completed by a Kentucky sales and use tax permit holder and submitted to the Department of Revenue within four (4) years from the date the tax was paid to apply for a refund of sales and use tax previously paid by the permit holder.

(43) Revenue Form 51A216, Application for Pollution Control Tax Exemption Certificate, shall be completed by a business, governmental unit or institution to apply for a sales and use tax exemption on purchases of tangible personal property used to control or abate pollution.

(44) Revenue Form 51A222, Certificate of Exemption for Alcohol Production Facilities, shall be presented to a retailer by a holder of an alcohol production tax exemption certificate or jointly by a contractor and the holder of an alcohol production tax exemption certificate to claim exemption from sales and use tax on materials and equipment that will become a part of an alcohol production facility as provided by KRS Chapter 247.

(45) Revenue Form 51A223, Application for Alcohol Production Facility Tax Exemption Certificate, shall be completed by a business seeking exemption from sales and use tax on the purchase of materials and equipment that will become a part of an alcohol production facility as provided by KRS Chapter 247.

(46) Revenue Form 51A226, Pollution Control Tax Exemption Certificate, shall be issued by the Department of Revenue to a business who has qualified for certain sales and use tax, corporation income, corporation license, and property tax benefits.

(47) Revenue Form 51A227, Certificate of Resale (Schools), shall be issued to a retailer by an exempt nonprofit elementary or secondary school or the organizations they sponsor or that are affiliated with them to claim an exemption from sales and use tax on the purchase of tangible personal property or digital property that will be resold if the proceeds from the resale of the property is used solely for the benefit of the elementary or secondary schools or their students.

(48) Revenue Form 51A228, Application for Fluidized Bed Combustion Technology Tax Exemption Certificate, shall be completed by a business, governmental unit or organization and sub-

mitted to the Department of Revenue to apply for a sales and use tax exemption on the purchase of equipment and materials used in fluidized bed combustion technology.

(49) Revenue Form 51A229, Fluidized Bed Combustion Technology Tax Exemption Certificate, shall be issued by the Department of Revenue to a business, governmental unit or organization to advise that they qualify for corporation license tax, property tax, and sales and use tax benefits.

(50) Revenue Form 51A241, Registration for the Kentucky Sales and Use Tax Refund for Motion Picture and Television Production Companies, shall be completed by a motion picture production company and submitted to the Department of Revenue to register for a sales and use tax refund.

(51) Revenue Form 51A242, Application for Sales and Use Tax Refund for Motion Picture Production Company, shall be completed by a registered motion picture production company and submitted to the Department of Revenue within sixty (60) days after completion of the filming or production of the motion picture in Kentucky to request a refund of the Kentucky sales and use tax paid on purchases of tangible personal property or digital property made in connection with filming and producing motion pictures in Kentucky.

(52) Revenue Form 51A250, Application for Transient Merchant Permit, shall be completed by a transient merchant and filed with the clerk in the county in which the business is to be conducted, or if an urban county government, with the officer of the government who has responsibility for the issuance of business permits and licenses to obtain a permit before conducting any business in Kentucky.

(53) Revenue Form 51A260, Streamlined Sales and Use Tax Agreement-Certificate of Exemption, shall be presented to a seller by a purchaser to claim that tangible personal property, digital property, or certain services purchased from the seller qualifies for exemption.

(54) Revenue Form 51A270, Certificate of Sales Tax Paid on the Purchase of a Motor Vehicle, shall be issued by motor vehicle dealers to a non-resident purchaser of a motor vehicle on which the Kentucky sales tax has been paid.

(55) Revenue Form 51A280, Out-Of-State Purchase-Use Tax Affidavit, shall be submitted to the county clerk by a taxpayer purchasing tangible personal property from out-of-state for title or first-time registration.

(56) Revenue Form 51A290, Information Sharing and Assignment Agreement for Designated Refund Claims, shall be submitted by an approved company or agency and its vendors and contractors who agree to share documentation with the Department of Revenue for refund claim under the Kentucky Enterprise Initiative Act, Signature Project, or Alternative Fuel, Gasification or Renewable Energy Facility.

(57) Revenue Form 51A291, Application for Kentucky Signature Project Sales and Use Tax Refund, shall be completed by an approved company or agency in the construction of an approved Signature Project submitted to the Department of Revenue annually during the (12) years the project grant agreement is in effect.

(58) Revenue Form 51A292, Expenditure Report for Signature Project Refunds, shall be submitted by a refund applicant to document expenditures and taxes paid on property and materials used in the construction of an approved Signature Project.

(59) Revenue Form 51A300, Application for Preapproval for Energy Efficiency Machinery or Equipment, shall be submitted by a person engaged in manufacturing for preapproval for purchase of new or replacement machinery or equipment that reduces the consumption of energy or energy producing fuels by at least fifteen (15) percent.

(60) Revenue Form 51A301, Application for Kentucky Alternative Fuel, Gasification, and Renewable Energy Facility Sales and Use Tax Refund, shall be submitted by a refund applicant to request refund of sales and use tax paid on purchases of building and construction materials purchased and used in the construction of an approved Alternative Fuel, Gasification, or Renewable Facility.

(61) Revenue Form 51A302, Expenditure Report for Alternative Fuel, Gasification, & Renewable Energy Facility Refunds, shall be submitted by a refund applicant to document expenditures and taxes paid on property and materials used in the construction of an approved Alternative Fuel, Gasification, or Renewable Energy Facility.

(62) Revenue Form 51A350, Information Sharing and Assignment Agreement for Energy Efficiency Project Incentive, shall be submitted by an approved company or agency and its vendors and contractors who agree to share documentation with the Department of Revenue for refund claims on construction of an approved Alternative Fuel, Gasification, or Renewable Energy Facility.

(63) Revenue Form 51A351, Application for Energy Efficiency Machinery or Equipment Sales and Use Tax Incentive, shall be submitted by a refund applicant to request refund of sales and use tax paid on purchases of approved energy-efficiency machinery or equipment used at a manufacturing plant.

(64) Revenue Form 51A400, Governmental Public Facility Sales Tax Rebate Registration, shall be completed by the public facility to determine eligibility for the sales tax rebate under KRS 139.533.

(65) Revenue Form 51A401, Governmental Public Facility Application for Sales Tax Rebate, shall be completed by the Public Facility to request a sales tax rebate. It includes a list of vendors and tax amounts claimed in the rebate request as well as banking information if an electronic fund transfer is requested by the Public Facility

(66) Revenue Form 51A402, Vendor Assignment Agreement for Sales at a Qualifying Public Facility, shall be properly executed for any seller, other than the qualifying governmental entity whose receipts are included in the rebate request.

(67) Revenue Form 51F008, Federal Government Exemption from Kentucky Sales and Use Tax, shall be issued by the Department of Revenue to a federal government unit which in turn is presented to a retailer by the federal government unit to claim exemption from sales and use tax on purchases of property to be used in the exempt governmental function.

(68) Revenue Form 51F009, Purchase Exemption Notification, shall be issued by the Department of Revenue to a resident non-profit charitable, educational or religious institution to advise the entity of the assigned purchase exemption number and additional information concerning the exemption from sales and use tax.

(69) Revenue Form 51F010, Energy Direct Pay Authorization, shall be issued by the Department of Revenue to advise a Kentucky sales and use tax permit holder that it has been authorized to purchase energy and energy-producing fuels without paying or reimbursing the vendor for the sales and use tax and that they are required to report and pay directly to the Department of Revenue the sales and use tax on that portion of the cost price which is subject to tax pursuant to KRS 139.480(3).

(70) Revenue Form 51F010(a), Utility Gross Receipts License Tax (UGRLT) Exemption Authorization, shall be issued by the Department of Revenue to advise a Kentucky sales and use tax permit holder that it has been authorized to purchase energy and energy-producing fuels without paying or reimbursing the vendor for the utility gross receipts license tax and that they are required to report and pay directly to the Department of Revenue the utility gross receipts license tax on that portion of the purchase price which is subject to tax.

(71) Revenue Form 51F010(b), Energy Direct Pay - Utility Gross Receipts License Tax Exemption Authorization, shall be issued by the Department of Revenue to advise a Kentucky sales and use tax permit holder that it has been authorized to purchase energy and energy-producing fuels without paying or reimbursing the vendor for either the sales and use tax or the utility gross receipts license tax and that they are required to report and pay directly to the Department of Revenue the sales and use tax and the utility gross receipts license tax on that portion of the purchase price which is subject to tax.

Section 2. Telecommunications Provider Tax - Required Forms. (1) Revenue Form 75A001, Telecommunications Tax Receipts Certification Form, shall be used by city and county taxing jurisdictions to certify tax receipts for prior fiscal year if applicable.

(2) Revenue Form 75A002, Telecommunications Provider Tax Return, shall be used by telecommunications providers to report gross revenues subject to the excise tax and gross revenues tax,

and by consumers to report retail purchases of multi-channel video programming services to report the tax due.

(3) Revenue Form 75A002 (I), Instructions for Telecommunications Provider Tax Return, shall be used by telecommunications providers as a guide in filing their telecommunications provider tax return.

(4) Revenue Form 75A005, Telecommunications Tax Complaint Form", shall be submitted to the Department of Revenue by local taxing authorities who express disagreement with the distribution of telecommunications tax to their jurisdiction.

(5) Revenue Form 75A900, Telecommunications Tax Application, shall be used by telecommunications providers to register with the Department of Revenue.

Section 3. Incorporation by Reference. (1) The following material is incorporated by reference:

(a) Sales and use tax - referenced material:

1. Revenue Form 51A101(a), "Sales and Use Tax Permit", August 2011[~~August 2008~~];

2. Revenue Form 51A101(b), "Sales and Use Tax Permit Update", August 2011[~~August 2008~~];

3. Revenue Form 51A101(c)(1), "Kentucky Streamlined Sales and Use Tax (SST) Filing Permit", August 2008;

4. Revenue Form 51A101(c)(2), Kentucky Streamlined Sales and Use Tax (SST) Filing Permit", August 2008;

5. Revenue Form 51A101(c)(4), Kentucky Streamlined Sales and Use Tax (SST) Filing Permit", August 2008;

6. Revenue Form 51A101(d), "Sales and Use Tax Permit Update (SST)", August 2011[~~August 2008~~];

7. Revenue Form 51A102, "Kentucky Sales and Use Tax Worksheet", January 2010;

8. Revenue Form 51A102E, "Kentucky Sales and Use Tax Worksheet - Electronic Funds Transfer", January 2010;

9. Revenue Form 51A103, "Kentucky Accelerated Sales and Use Tax Worksheet", January 2010;

10. Revenue Form 51A103E, "Kentucky Accelerated Sales and Use Tax Worksheet - Electronic Funds Transfer", January 2010;

11. Revenue Form 51A105, "Resale Certificate", December 2009;

12. Revenue Form 51A109, "Application for Energy Direct Pay Authorization (Sales and Use Tax and Utility Gross Receipts License Tax)", February 2011[~~September 2006~~];

13. Revenue Form 51A110, "Direct Pay Authorization", April2011 [~~June 2010~~];

14. Revenue Form 51A111, "Certificate of Exemption Machinery for New and Expanded Industry", August 2011[~~December 2008~~];

15. Revenue Form 51A112, "Application for Direct Pay Authorization", December 2009;

16. Revenue Form 51A113, "Kentucky Consumer's Use Tax Worksheet", January 2010;

17. Revenue Form 51A113(O), "Consumer's Use Tax Return", December 2009;

18. Revenue Form 51A115, "Order for Selected Sales and Use Tax Publications", April 2011[~~April 2008~~];

19. Revenue Form 51A116, "Use Tax Compliance Inquiry Worksheet", March 2008;

20. Revenue Form 51A125, "Application for Purchase Exemption Sales and Use Tax", December 2009;

21. Revenue Form 51A126, "Purchase Exemption Certificate", December 2009;

22. Revenue Form 51A127, "Out-of-State Purchase Exemption Certificate", December 2009;

23. Revenue Form 51A128, "Solid Waste Recycling Machinery Exemption Certificate", March 2005;

24. Revenue Form 51A129, "Kentucky Sales and Use Tax Energy Exemption Annual Return", February 2011[~~December 2008~~];

25. Revenue Form 51A130, "Kentucky Sales and Use Tax Monthly Aviation Fuel Tax Credit Schedule of Qualified Certificated Air Carriers ", August 2005;

26. Revenue Form 51A131, "Kentucky Sales and Use Tax Monthly Aviation Fuel Dealer Supplementary Schedule", August 2008;

27. Revenue Form 51A132, "Kentucky Sales and Use Tax Equine Breeders Supplementary Schedule", June 2005;

28. Revenue Form 51A135, "Kentucky Sales Tax Motor Vehicle Sales Supplementary Schedule", August 2006;

29. Revenue Form 51A143, "Purchase Exemption Certificate - Watercraft Industry", March 2005;

30. Revenue Form 51A149, "Certificate of Exemption for Pollution Control Facilities", January 2007;

31. Revenue Form 51A150, "Aircraft Exemption Certificate", January 2005;

32. Revenue Form 51A154, "Certificate of Exemption Out-of-State Delivery for Aircraft, All Terrain Vehicle (ATV), Mobile/Manufactured Homes, Campers, Boats, Motors or Trailers", January 2005;

33. Revenue Form 51A157, "Certificate of Exemption - Water Used in Raising Equine", July 2005;

34. Revenue Form 51A158, "Farm Exemption Certificate", July 2008;

35. Revenue Form 51A159, "On-Farm Facilities Certificate of Exemption for Materials, Machinery and Equipment", July 2008;

36. Revenue Form 51A160, "Application for Truck Part Direct Pay Authorization", March 2005;

37. Revenue Form 51A161, "Truck Part Direct Pay Authorization", December 2006;

38. Revenue Form 51A163, "Application for Charter Bus Part Direct Pay Authorization", June 2005;

39. Revenue Form 51A164, "Charter Bus Direct Pay Authorization", August 2006;

40. Revenue Form 51A200, "Application for Kentucky Enterprise Initiative Act (KEIA) Tax Refund Program", March 2008;

41. Revenue Form 51A205, "Kentucky Sales and Use Tax Instructions", July 2008;

42. Revenue Form 51A209, "Sales and Use Tax Refund Application", May 2007;

43. Revenue Form 51A216, "Application for Pollution Control Tax Exemption Certificate", March 2005;

44. Revenue Form 51A222, "Certificate of Exemption for Alcohol Production Facilities", August 2011[~~January 2007~~];

45. Revenue Form 51A223, "Application for Alcohol Production Facility Tax Exemption Certificate", July 1980;

46. Revenue Form 51A226, "Pollution Control Tax Exemption Certificate", March 2005;

47. Revenue Form 51A227, "Certificate of Resale (Schools)", May 2007;

48. Revenue Form 51A228, "Application for Fluidized Bed Combustion Technology Tax Exemption Certificate", May 2007;

49. Revenue Form 51A229, "Fluidized Bed Combustion Technology Tax Exemption Certificate", August 2011[~~January 2008~~];

50. Revenue Form 51A241, "Registration for the Kentucky Sales and Use Tax Refund for Motion Picture and Television Production Companies", May 2007;

51. Revenue Form 51A242, "Application for Sales and Use Tax Refund for Motion Picture Production Company", May 2007;

52. Revenue Form 51A250, "Application for Transient Merchant Permit", April, 2005;

53. Revenue Form 51A260, "Streamlined Sales and Use Tax Agreement - Certificate of Exemption", February 2010;

54. Revenue Form 51A270, "Certificate of Sales Tax Paid on the Purchase of a Motor Vehicle", August 2006;

55. Revenue Form 51A280, "Out-Of-State Purchase-Use Tax Affidavit", July 2009;

56. Revenue Form 51A290, "Information Sharing and Assignment Agreement for Designated Refund Claims", October 2007;

57. Revenue Form 51A291, "Application for Kentucky Signature Project Sales and Use Tax Refund", February 2011[~~October 2007~~];

58. Revenue Form 51A292, "Expenditure Report for Signature Project Refunds", October 2007;

59. Revenue Form 51A300, "Application for Preapproval for Energy Efficiency Machinery or Equipment", June 2008;

60. Revenue Form 51A301, "Application for Kentucky Alternative Fuel, Gasification, and Renewable Energy Facility Sales and Use Tax Refund", April 2011[~~December 2008~~];

61. Revenue Form 51A302, "Expenditure Report for Alternative

Fuel, Gasification, & Renewable Energy Facility Refunds", December 2008;

62. Revenue Form 51A350, "Information Sharing and Assignment Agreement for Energy Efficiency Project Incentive", June 2008;

63. Revenue Form 51A351, "Application for Energy Efficiency Machinery or Equipment Sales and Use Tax Incentive", April 2011[~~June 2008~~];

64. Revenue Form 51A400, "Governmental Public Facility Sales Tax Rebate Registration", June 2010;

65. Revenue Form 51A401, "Governmental Public Facility Application for Sales Tax Rebate", June 2010;

66. Revenue Form 51A402, "Vendor Assignment Agreement for Sales at a Qualifying Public Facility", June 2010;

67. Revenue Form 51F008, "Federal Government Exemption from Kentucky Sales and Use Tax", January 2008;

68. Revenue Form 51F009, "Purchase Exemption Notification", January 2008;

69. Revenue Form 51F010, "Energy Direct Pay Authorization", January 2008;

70. Revenue Form 51F010(a), "Utility Gross Receipts License Tax (UGRLT) Exemption Authorization", January 2008; and

71. Revenue Form 51F010(b), "Energy Direct Pay - Utility Gross Receipts License Tax Exemption Authorization", January 2008;

(b) Telecommunications provider tax - referenced material:

1. Revenue Form 75A001, "Telecommunications Tax Receipts Certification Form", December 2005;

2. Revenue Form 75A002, "Telecommunications Provider Tax Return", March 2006;

3. Revenue Form 75A002(I), "Instructions for Telecommunications Provider Tax Return", July 2006;

4. Revenue Form 75A005, "Telecommunications Tax Complaint Form", April 2011[~~October 2006~~]; and

5. Revenue Form 75A900, "Telecommunications Tax Application", December 2005.

(2) This material may be inspected, copied, or obtained, subject to applicable copyright law, at the Kentucky Department of Revenue, 501 High Street, Frankfort, Kentucky 40620, or at any Kentucky Department of Revenue Taxpayer Service Center, Monday through Friday, 8 a.m. to 5 p.m.

THOMAS B. MILLER, Commissioner

APPROVED BY AGENCY: October 12, 2011

FILED WITH LRC: October 13, 2011 at 4 p.m.

PUBLIC HEARING AND PUBLIC COMMENT PERIOD A public hearing on this proposed amended administrative regulation shall be held on November 23rd, 2011, from 10:00 a.m. to 12:00 p.m. in Room 386, Capitol Annex Building, Frankfort, Kentucky 40601. Individuals interested in being heard at this hearing shall notify this agency in writing at least five (5) workdays prior to the hearing, of their intent to attend. If no notification of intent to attend the hearing is received by the required date, the hearing may be canceled. This hearing is open to the public. Any person who wishes to be heard will be given an opportunity to comment on this proposed administrative regulation. A transcript of the public hearing will not be made unless a written request for a transcript is made. If you do not wish to be heard at the public hearing, you may submit written comments on the proposed administrative regulation. Written comments shall be accepted through November 30th, 2011. Send written notification of intent to be heard at the public hearing or written comments on the proposed administrative regulation to the contact person noted below.

CONTACT PERSON: DeVon Hankins, Policy Advisor, Office of General Counsel, Finance and Administration Cabinet, 392 Capitol Annex, Frankfort, Kentucky 40601, phone (502) 564-6660, fax (502) 564-9875.

REGULATORY IMPACT ANALYSIS AND TIERING STATEMENT

Contact Person: DeVon Hankins (1) Provide a brief summary of:

(a) What this administrative regulation does: KRS 131.130(3) authorizes the Department of Revenue to prescribe forms necessary for the administration of any revenue law by the promulgation of an administrative regulation incorporating the forms by reference. This administrative regulation incorporates by reference the required revenue forms used in the administration of Sales and Use Tax and Telecommunications Excise and Gross Revenues Tax by the Department of Revenue.

(b) The necessity of this administrative regulation: This administrative regulation is necessary in order for the Department of Revenue to meet the requirements of KRS Chapter 13A.110 which requires that forms required to be submitted by a regulated entity shall be included in an administrative regulation.

(c) How this administrative regulation conforms to the content of the authorizing statutes: KRS 131.130(3) authorizes the Department of Revenue to prescribe forms necessary for the administration of any revenue law by the promulgation of an administrative regulation incorporating the forms by reference. This administrative regulation incorporates by reference the required revenue forms used in the administration of the Sales and Use Tax and the Telecommunications Excise and Gross Revenues Tax by the Department of Revenue.

(d) How this administrative regulation currently assists or will assist in the effective administration of the statutes: This administrative regulation incorporates by reference the required revenue forms used in the administration of the Sales and Use Tax and Telecommunications Excise and Gross Revenues Tax by the Department of Revenue.

(2) If this is an amendment to an existing administrative regulation, provide a brief summary of:

(a) How the amendment will change this existing administrative regulation: This amendment provides updated form information.

(b) The necessity of the amendment to this administrative regulation: This amendment is necessary to ensure that the most recent versions of forms are referenced.

(c) How the amendment conforms to the content of the authorizing statutes: This amendment incorporates the most recent forms by reference as authorized by KRS 131.130(3).

(d) How the amendment will assist in the effective administration of the statutes:
This amendment informs taxpayers of the most recent versions of forms that should be used to file their tax returns.

(3) List the type and number of individuals, businesses, organizations, or state and local governments affected by this administrative regulation: All Kentucky taxpayers and their representatives will be affected by the listing of forms administered by the Department of Revenue in an administrative regulation. Local government will be affected to the extent they utilize forms administered by the Department of Revenue. The Department of Revenue will be affected to the extent that it administers the referenced forms.

(4) Provide an analysis of how the entities identified in question (3) will be impacted by either the implementation of this administrative regulation, if new, or by the change, if it is an amendment, including:

(a) List the actions that each of the regulated entities identified in question (3) will have to take to comply with this administrative regulation or amendment: No actions will have to be taken by the taxpayers or local governments to comply with this administrative regulation.

(b) In complying with this administrative regulation or amendment, how much will it cost each of the entities identified in question (3): There will be no anticipated cost incurred by the taxpayer or local government.

(c) As a result of compliance, what benefits will accrue to the entities identified in question (3): Taxpayers will be able to reference all sales and use and telecommunications excise and gross revenues tax forms in one location.

(5) Provide an estimate of how much it will cost the administrative body to implement this administrative regulation:

(a) Initially: The Department of Revenue will not incur additional costs as the result of this regulation.

(b) On a continuing basis: The Department of Revenue will not incur additional costs as the result of this regulation.

(6) What is the source of the funding to be used for the implementation and enforcement of this administrative regulation: Department of Revenue agency funds.

(7) Provide an assessment of whether an increase in fees or funding will be necessary to implement this administrative regulation, if new or by the change if it is an amendment: This administrative regulation does not require an increase in fees or funding.

(8) State whether or not this administrative regulation established any fees or directly or indirectly increased any fees: This administrative regulation does not establish or increase any fees either directly or indirectly.

(9) TIERING: Is tiering applied? Tiering was not applied because the requirements of this regulation apply to every taxpayer.

FISCAL NOTE ON STATE OR LOCAL GOVERNMENT

1. Does this administrative regulation relate to any program, service, or requirements of a state or local government (including cities, counties, fire departments, or school districts)? Yes

2. What units, parts or divisions of state or local government (including cities, counties, fire departments, or school districts) will be impacted by this administrative regulation? The Department of Revenue will be impacted by this administrative regulation.

3. Identify each state or federal statute or federal regulation that requires or authorizes the action taken by the administrative regulation. KRS 131.130(3).

4. Estimate the effect of this administrative regulation on the expenditures and revenues of a state or local government agency (including cities, counties, fire departments, or school districts) for the first full year the administrative regulation is to be in effect. There will be no effect on expenditures or revenue of a state or local government agency as a result of this administrative regulation.

(a) How much revenue will this administrative regulation generate for the state or local government (including cities, counties, fire departments, or school districts) for the first year? N/A

(b) How much revenue will this administrative regulation generate for the state or local government (including cities, counties, fire departments, or school districts) for subsequent years? N/A

(c) How much will it cost to administer this program for the first year? N/A

(d) How much will it cost to administer this program for subsequent years? N/A

Note: If specific dollar estimates cannot be determined, provide a brief narrative to explain the fiscal impact of the administrative regulation.

Revenues (+/-):

Expenditures (+/-):

Other Explanation:

GENERAL GOVERNMENT CABINET
Kentucky Board of Licensed Professional Counselors
(Amendment)

201 KAR 36:060. Qualifying experience under supervision.

RELATES TO: KRS 335.500(4), 335.505(4), 335.525(1)(e)

STATUTORY AUTHORITY: KRS 335.515(1), (3)

NECESSITY, FUNCTION, AND CONFORMITY: KRS 335.505(4) allows a student intern or trainee in professional counseling to use the title of "professional counselor intern" or "student in training" if the activities are performed under the supervision or direction of an approved supervisor and the activities are a part of a supervised program of study. KRS 335.525(1)(e) provides that an applicant for a professional clinical counselor license shall have acquired 4000 hours of experience in the practice of counseling under approved supervision. KRS 335.515(3) requires the board to promulgate administrative regulations to implement KRS 335.500 to 335.599, relating to licensed professional counselors. This administrative regulation establishes the requirements relating to supervision and the requirements for experience under supervision.

Section 1. Definitions. (1) "Face-to-face" means supervision that may include interactive, simultaneous video and audio media with a minimum of one direct meeting per month that is in person where the supervisor and supervisee are physically present in the same room.

(2) "Practice of counseling" means professional counseling services within the scope of Section 2 of this administrative regulation and which involve the application of mental health and development principals, methods or procedures, including assessment, evaluation, diagnosis, and treatment of emotional disorders or mental illnesses, to assist individuals to achieve more effective personal, social, educational, or career development and adjustment.

(3)[~~(2)~~] "Supervisee" means a licensed professional counselor associate who works with clients under supervision.

(4)[~~(3)~~] "Supervision" means the educational process of utilizing a partnership between a supervisor and a supervisee aimed at enhancing the professional development of the supervisee in providing professional counseling services to meet the requirements of KRS 335.525(1)(e).

(5)[~~(4)~~] "Supervisor" means a member of a mental health or behavioral-services profession listed in Section 3(1) of this administrative regulation who controls, oversees, guides, and takes responsibility for the professional clinical counseling practice of a supervisee in accordance with this administrative regulation.

Section 2. Requirements for the Practice of Professional Counseling. (1) The practice of professional counseling shall be based on knowledge of interpersonal, cognitive, cognitive behavioral, psychodynamics, human relations, crisis intervention, psychopathology, group dynamics, and effective methods and strategies necessary to help the client achieve mental, vocational, emotional, physical, social, moral, and spiritual development and adjustment throughout the client's life span.

(2) A practitioner of professional counseling shall possess and utilize numerous skills, including skills necessary to apply professional counseling services relative to the following areas:

(a) The helping relationship, including counseling theory and practice;

(b) Human growth and development;

(c) Lifestyle and career development;

(d) Group dynamics, process, counseling, and consulting;

(e) Assessment, appraisal, and testing of individuals where the licensee has had appropriate training and supervised experience with the instruments used by that individual;

(f) Social and cultural foundation, including multicultural issues;

(g) Principles of etiology, diagnosis, treatment planning, and prevention of mental and emotional disorders and dysfunctional behavior;

(h) Research and evaluation; and

(i) Professional orientation and ethics.

Section 3. Supervision. (1) A supervisor shall be properly credentialed under Kentucky law as a member of one (1) of the following professions:

(a) A licensed professional clinical counselor;

(b) A licensed psychologist, licensed psychological practitioner, or a certified psychologist with autonomous functioning;

(c) A licensed clinical social worker;

(d) A licensed psychiatrist;

(e) A nurse with a master's degree and psychiatric certification; or

(f) A licensed marriage and family therapist.

(2) The supervisor shall:

(a) Provide supervision to a person obtaining the experience required under KRS 335.525(1)(e);

(b) Not have:

1. An unresolved citation filed against the supervisor by the board that licenses or certifies that profession;

2. A suspended or probated license or certificate;

3. An order from the board under which the supervisor is licensed or certified prohibiting the supervisor from providing supervision; or

4. A previous or existing dual relationship or other personal relationship with a supervisee;

(c) Have been in the practice of his or her profession for two (2) years following licensure or certification in that profession; and

(d) Have completed the supervisor training required by subsection (3) of this section.

1. Except as provided in subparagraph 2 of this paragraph, experience acquired under the supervision of an individual who has not completed the supervisor training shall not count toward the requirements of KRS 335.525(1)(e).

2. A supervisor who is providing supervision on the effective date of this administrative regulation shall complete the training by October 31, 2010.

(3) In order to obtain board-approved supervisor status, a supervisor shall complete three (3) hours of board-approved supervisor training.

(a) The board-approved supervisor training shall cover Kentucky law governing the practice of professional counseling, both administrative regulations and statutes, theories of supervision, ethical issues involved in supervision, and supervisor responsibilities such as logs, treatment, planning, recording, and proper documentation.

(b) Supervisor training shall be conducted by an instructor who is a Licensed Professional Clinical Counselor and who has demonstrated proficiency in the curriculum established in paragraph (a) if this subsection.

(c) To maintain board-approved supervisor status, a supervisor shall retake the board-approved supervisor training every three (3) years.

(4) A supervisor of record shall assume responsibility for the practice of the supervisee. A supervisor shall not serve as a supervisor of record for more than six (6) persons obtaining experience for certification or licensure at the same time.

Section 4. Supervisory Agreement. (1) A supervisee shall enter into a written supervisory agreement with an approved supervisor. The supervisory agreement shall contain:

(a) The name and address of the supervisee;

(b) The name, address, license or certification number, and number of years of practice of the supervisor of record;

(c) The name, address, license or certification number, and number of years of practice of other supervisors;

(d) The agency, institution, or organization where the experience will be received;

(e) A detailed description of the nature of the practice including the type of:

1. Clients which shall be seen;

2. Therapies and treatment modalities which shall be used including the prospective length of treatment; and

3. Problems which shall be treated;

(f) The nature, duration, and frequency of the supervision, including the:

1. Number of hours of supervision per week;

2. Number of hours of individual supervision;

3. Methodology for transmission of case information; and

4. Number of hours of face-to-face supervision which meet[~~:~~ ~~a. Meet~~] the requirements of KRS 335.525(1)(e); [~~and~~]

(g) Clearly identify whether supervision shall:

1. [~~b.~~] Occur a minimum of three (3) times per month and one (1) hour per meeting for a full time practice which consists of twenty-five (25) clock hours or greater per week; or

2. Occur a minimum of one (1) hour for every thirty (30) hours of client contact for a part time practice which consists of less than twenty-five (25) clock hours per week.

(h)[~~(g)~~] The conditions or procedures for termination of the supervision;

(i)[~~(h)~~] A statement that:

1. The supervisor of record understands that the supervisor shall be held accountable to the board for the care given to the supervisee's clients; and

2. The supervisor of record meets the criteria established in Section 3 of this administrative regulation; and

(j)[~~(i)~~] The signatures of both the supervisor and the supervisee. If a supervisee changes his or her supervisor of record as identified in the supervisory agreement, the supervisee shall submit a new supervisory agreement which sets forth the information required by subsection (1) of this section and which identifies the new supervisor of record.

(3) The supervisory agreement shall be approved by the board before the licensed professional counselor associate begins the practice of professional counseling.

Section 5. Experience Under Supervision. (1) Experience under supervision shall consist of:[~~(1)~~] Direct responsibility for a specific individual or group of clients; and

(b)[~~(2)~~] Broad exposure and opportunity for skill enhancement with a variety of developmental issues, dysfunctions, diagnoses, acuity levels and population groups.

(2) The board may, in its discretion for extenuating circumstances beyond the supervisor's or supervisee's control, grant a limited waiver from the requirement of one monthly direct in person meeting to satisfy the face-to-face supervision requirements upon written request by the supervisor and supervisee.

Section 6. Supervision Requirements. (1) Supervision shall relate specifically to the qualifying experience and shall focus on:

(a) The appropriate diagnosis of a client problem leading to proficiency in applying professionally recognized clinical nomenclature;

(b) The development and modification of the treatment plan;

(c) The development of treatment skills suitable to each phase of the therapeutic process;

(d) Ethical problems in the practice of professional counseling; and

(e) The development and use of the professional self in the therapeutic process.

(2) A supervisee shall not continue to practice professional counseling if:

(a) The conditions for supervision set forth in the supervisory agreement required by Section 4 of this administrative regulation are not followed; or

(b) The supervisory agreement is terminated for any reason.

(3) If the terms of the supervisory agreement are not being met by the supervisee, the supervisor shall immediately notify this board in writing.

(4) The supervisor and supervisee shall sign and file with the board a Semi-Annual Report Form with their renewal application and by April 1st of each year.

Section 7. Evaluation by Board. The period of supervised experience required by KRS 335.525(1)(e) shall be evaluated by the board according to one (1) of the following methods:

(1) A candidate who seeks to obtain experience in the Commonwealth of Kentucky shall submit the supervisory agreement required by Section 4 of this administrative regulation for the experience prior to beginning to accrue the required experience; or

(2) A candidate who obtained the experience in another state shall submit documentation of the hours of supervision with the Application for Licensed Professional Counselor and Associate required by 201 KAR 36:070. The documentation shall also:

(a) Provide information that verifies that the requirements for the license or certificate of the supervisor from the state in which the license or certificate was held are substantially equivalent to the requirements for that license or certificate in Kentucky;

(b) Provide information that verifies that the supervisor is in good standing with the certifying or licensing state; and

(c) Demonstrate that the practice and supervision requirements in the state from which the candidate is applying are substantially equivalent to the requirements established under this administrative regulation.

Section 8. Temporary Supervision. (1) In extenuating circumstances, if a licensed professional counselor associate is without supervision, the associate may continue working up to sixty (60) calendar days under the supervision of a qualified mental health provider while an appropriate board-approved supervisor is sought and a new supervision contract is submitted to the board. Extenuating circumstances include situations such as death or serious illness of the board-approved supervisor, a leave of absence by the supervisor, or the termination of the supervisor's employment.

(2)(a) Within ten (10) days of the occurrence, the supervisee shall notify the board of the extenuating circumstances which have

caused the supervisee to require temporary supervision.

(b) The supervisee shall submit, in writing, a plan for resolution of the situation within thirty (30) calendar days of the change in status of board-approved supervision.

(c) The written plan shall include:

1. The name of the temporary supervisor;

2. Verification of the credential held by the temporary supervisor;

3. An email address and a postal address for the temporary supervisor and the supervisee; and

4. A telephone number for the temporary supervisor.

Section 9. Incorporation by Reference. (1) "LPCA Supervisory Agreement", established March 2010, is incorporated by reference.

(2) "Counseling Associate Semi-Annual Report", established October 2011, is incorporated by reference.

(3) This material may be inspected, copied, or obtained, subject to applicable copyright law, at the Kentucky Board of Licensed Professional Counselors, 911 Leawood Drive, Frankfort, Kentucky 40601, Monday through Friday, 8 a.m. to 5 p.m.

TIMOTHY ROBERTS, Chair

APPROVED BY AGENCY: September 16, 2011

FILED WITH LRC: October 14, 2011 at 9 a.m.

PUBLIC HEARING AND COMMENT PERIOD: A public hearing on this administrative regulation shall be held on November 21, 2011 at 2:00 pm at Division of Occupations and Professions, 911 Leawood Drive, Frankfort, Kentucky. Individuals interested in being heard at this hearing shall notify this agency in writing by November 14, 2011 five workdays prior to the hearing, of their intent to attend. If no notification of intent to attend the hearing is received by that date, the hearing may be canceled. This hearing is open to the public. Any person who wishes to be heard will be given an opportunity to comment on the proposed administrative regulation. A transcript of the public hearing will not be made unless a written request for a transcript is made. If you do not wish to be heard at the public hearing, you may submit written comments on the proposed administrative regulation. Written comments shall be accepted until November 30, 2011**.** Send written notification of intent to be heard at the public hearing or written comments on the proposed administrative regulation to the contact person.

CONTACT PERSON: Shannon Tivitt, Director, Division of Occupations and Professions, 911 Leawood Drive, Frankfort, Kentucky 40602. phone (502) 564-3296, fax (502) 564-4818.

REGULATORY IMPACT ANALYSIS AND TIERING STATEMENT

Contact Person: Shannon Tivitt

(1) Provide a brief summary of:

(a) What this administrative regulation does: This administrative regulation establishes the supervision requirements to qualify for licensure.

(b) The necessity of this administrative regulation: This administrative regulation enables the board to evaluate applications by establishing the supervision experience requirements for licensure.

(c) How this administrative regulation conforms to the content of the authorizing statutes:
KRS 335.525(1)(e) provides that an applicant for a professional counselor license must have acquired 4000 hours of experience in the practice of counseling under the general supervision of an approved supervisor. This administrative regulation establishes the requirements relating to supervision and the requirements for experience under supervision.

(d) How this administrative regulation currently assists or will assist in the effective administration of the statutes: This administrative regulation specifies the types of experience that is acceptable for licensure.

(2) If this is an amendment to an existing administrative regulation, provide a brief summary of:

(a) How the amendment will change this existing administrative regulation: The amendment to this administrative regulation establishes a definition for "face-to-face supervision"; allows licensed psychological practitioners to be a supervisor; prorates supervision for those persons working in a part time practice; establishes a waiver for monthly supervision; and requires the filing of a Semi-Annual Report.

(b) The necessity of the amendment to this administrative regulation: This administrative regulation enables the board to ensure that supervisors and supervisees know what is required for proper supervision.

(c) How the amendment conforms to the content of the authorizing statutes: KRS 335.525(1)(e) provides that an applicant for a professional counselor license must have acquired 4000 hours of experience in the practice of counseling under the general supervision of an approved supervisor. KRS 335(1)(e) also provides that a supervisee shall received 100 hours of direct, face-to-face supervision from an approved supervisor. This administrative regulation establishes the requirements relating to supervision and the requirements for experience under supervision.

(d) How the amendment will assist in the effective administration of the statutes: The regulation specifies the requirements for obtaining the supervision necessary to qualify for licensure.

(3) List the type and number of individuals, businesses, organizations, or state and local governments affected by this administrative regulation: The board licenses approximately 1200 persons in the Commonwealth.

(4) Provide an analysis of how the entities identified in question (3) will be impacted by either the implementation of this administrative regulation, if new, or by the change, if it is an amendment, including:

(a) List the actions that each of the regulated entities identified in question (3) will have to take to comply with this administrative regulation or amendment: This administrative regulation provides what supervisees will be required to have for "face-to-face supervision." It also allows licensed psychological practitioners to be a supervisor. It prorates supervision for those persons working in a part time practice, establishes a waiver for monthly supervision, and requires the filing of a Semi-Annual Report..

(b) In complying with this administrative regulation or amendment, how much will it cost each of the entities identified in question (3): The cost will be determined by the supervisor.

(c) As a result of compliance, what benefits will accrue to the entities identified in question (3): The board expects that a face-to-face supervision will be easier to obtain, and they will better understand the amount of monthly supervision required.

(5) Provide an estimate of how much it will cost the administrative body to implement this administrative regulation: None

(a) Initially: None

(b) On a continuing basis: None

(6) What is the source of the funding to be used for the implementation and enforcement of this administrative regulation: Agency funds.

(7) Provide an assessment of whether an increase in fees or funding will be necessary to implement this administrative regulation, if new, or by the change if it is an amendment: No fee increase is necessary to implement this administrative regulation.

(8) State whether or not this administrative regulation established any fees or directly or indirectly increased any fees: This administrative regulation does not establish any fees or directly or indirectly increase any fees

(9) TIERING: Is tiering applied? No. This administrative regulation applies to all associates equally.

FISCAL NOTE ON STATE OR LOCAL GOVERNMENT

1. Does this administrative regulation relate to any program, service, or requirements of a state or local government (including cities, counties, fire departments, or school districts)? Yes

2. What units, parts or divisions of state or local government (including cities, counties, fire departments, or school districts) will be impacted by this administrative regulation?

3. Identify each state or federal statute or federal regulation that requires or authorizes the action taken by the administrative regulation.

4. Estimate the effect of this administrative regulation on the expenditures and revenues of a state or local government agency (including cities, counties, fire departments, or school districts) for the first full year the administrative regulation is to be in effect.

(a) How much revenue will this administrative regulation generate for the state or local government (including cities, counties, fire departments, or school districts) for the first year?

(b) How much revenue will this administrative regulation generate for the state or local government (including cities, counties, fire departments, or school districts) for subsequent years?

(c) How much will it cost to administer this program for the first year?

(d) How much will it cost to administer this program for subsequent years?

Note: If specific dollar estimates cannot be determined, provide a brief narrative to explain the fiscal impact of the administrative regulation.

Revenues (+/-):

Expenditures (+/-):

Other Explanation:

GENERAL GOVERNMENT CABINET
Kentucky Board Of Licensed Professional Counselors
(Amendment)

201 KAR 36:070. Education and examination requirements.

RELATES TO: KRS 335.525(1)(c), (d), and (f), 335.527(1)(a)

STATUTORY AUTHORITY: KRS 335.515(1), (3)

NECESSITY, FUNCTION, AND CONFORMITY: KRS 335.525(1)(c) requires that applicants for licensure shall have received a master's or doctoral degree in counseling or a related field from a regionally-accredited institution. KRS 335.525(1)(d) requires that applicants for licensure shall have sixty (60) graduate semester hours in specified areas. KRS 335.525(1)(f) requires that applicants achieve passing scores on the examination required by the Board. This administrative regulation establishes the educational and examination requirements for licensure.

Section 1. (1) Degree in counseling.

(a) To qualify as a degree in counseling under KRS 335.525(1)(c), a degree shall:

1. Clearly indicate that it is a degree in counseling from a counseling program as evidenced by the description in its catalogues and brochures outlining the intent to educate and train the individual for the practice of professional counseling as defined in KRS 335.500(5).

2. Include word "counseling" in the name of the degree, the academic program of study or the major field of study;

3. Be from a counseling program that stands as a recognizable organizational entity within the institution and has a counseling faculty who identify with the clinical counseling profession; and

4. Include practicum or internship experience of at least 600 hours in a counseling program that stands as a recognizable organizational entity within the institution and which has a counseling faculty who identify with the counseling profession or that is primarily counseling in nature.

(2) Degree in a related field.

(a) To qualify as a degree in a related field under KRS 335.525(1)(c), a degree shall:

1. Be awarded from an academic program of study for the degree that follows an organized sequence of graduate coursework with at least one course in a minimum of seven (7) of the nine (9) content areas established in KRS 335.525(1)(d);

2. Include a three (3) semester hour course, at the minimum, on Professional Orientation and Ethics that has as its concentration the American Counseling Association Code of Ethics; and

3. Include practicum or internship experience of at least 600 hours in a counseling program that stands as a recognizable organizational entity within the institution and which has a counseling faculty who identify with the counseling profession or that is primarily counseling in nature.

(b) The degree shall be designed to educate and train the individual for the practice of professional counseling as defined by KRS 335.500(5).[~~In accordance with KRS 335.525(1)(c), an applicant shall be deemed to have a degree in:~~

~~(a) Counseling if the applicant has completed an academic program of study where the name of the program or the major field of study contains the word "counseling"; or~~

~~(b) A related field if the applicant has completed an academic program of study that includes an organized sequence of graduate coursework in a minimum of five (5) of the nine (9) content areas established in KRS 335.525(1)(d).~~]

(3) Examples of degrees that shall not be accepted as a degree in counseling or a degree in a related field for purposes of licensure include a degree in Clinical Psychology, Social Work, Criminal Justice or Special Education.

(4)[~~(2)~~] If an applicant proffers a degree in a related field, the applicant shall also provide evidence of additional graduate coursework in each area listed in KRS 335.525(1)(d)1-9 that is not included in the applicant's degree. The coursework in the degree program, in addition to the other coursework, shall demonstrate that the applicant has documented coursework in all nine (9) of the content areas listed in KRS 335.525(1)(d).

Section 2. All coursework submitted for licensure shall be from a regionally accredited educational institution which is accredited by any one (1) of the following: Southern Association of Colleges and Schools, Middle States Association of Colleges and Schools, New England Association of Colleges and Schools, North Central Association of Colleges and Schools, North Western Association of Schools and Colleges, and Western Association of Schools and Colleges.[~~(1) Except as provided by subsection (2) of this section, the practicum or internship required by KRS 335.525(1)(e) shall be completed within the organized sequence of study of the graduate degree of the applicant.~~

~~(2) If the degree held by the applicant did not include a 400 hour practicum or internship, the applicant shall have completed a graduate level practicum or internship at a regionally- accredited university or college under the direction of a qualified graduate faculty member.~~]

Section 3. Examination. Applicants for licensure as a Licensed Professional Clinical Counselor shall obtain a passing score on the National Counselor Examination for Licensure and Certification (NCE) or the National Clinical Mental Health Counseling Examination (NCMHCE).

Section 4. Incorporation by Reference. (1) The following material is incorporated by reference:

(a) "Instructions for Completion of Application for a Licensed Professional Counselor Associate (LPCA)";

(b) "Instructions for Completion of Application for Licensed Professional Counselor (LPCC)"; [~~and~~]

(c) "Application for Licensed Professional Clinical Counselor[~~and Associate~~] and Licensing Via Endorsement for Reciprocity, October 2011"; and

(d) "Application for Licensed Professional Counselor Associate, "October 2011."

(2) This material may be inspected, copied, or obtained, subject to applicable copyright law, at the Division of Occupations and Professions, 911 Leawood Drive, Frankfort, Kentucky 40601, Monday through Friday, 8 a.m. to 4:30 p.m.

TIMOTHY ROBERTS, Chair

APPROVED BY AGENCY: September 16, 2011

FILED WITH LRC: October 14, 2011 at 9 a.m.

PUBLIC HEARING AND PUBLIC COMMENT PERIOD: A public hearing on this administrative regulation shall be held on November 21, 2011 at 2:00 pm at Division of Occupations and Professions, 911 Leawood Drive, Frankfort, Kentucky. Individuals interested in being heard at this hearing shall notify this agency in writing by November 14, 2011 five workdays prior to the hearing, of their intent to attend. If no notification of intent to attend the hearing is received by that date, the hearing may be canceled. This hearing is open to the public. Any person who wishes to be heard will be given an opportunity to comment on the proposed administrative regulation. A transcript of the public hearing will not be made unless a written request for a transcript is made. If you do not wish to be heard at the public hearing, you may submit written comments

on the proposed administrative regulation. Written comments shall be accepted until November 30, 2011**.** Send written notification of intent to be heard at the public hearing or written comments on the proposed administrative regulation to the contact person.

CONTACT PERSON: Shannon Tivitt, Director, Division of Occupations and Professions, 911 Leawood Drive, Frankfort, Kentucky 40602. phone (502) 564-3296, fax (502) 564-4818.

REGULATORY IMPACT ANALYSIS AND TIERING STATEMENT

Contact Person: Shannon Tivitt

(1) Provide a brief summary of:

(a) What this administrative regulation does: This administrative regulation establishes the educational and examination requirements to qualify for licensure.

(b) The necessity of this administrative regulation: This administrative regulation enables the board to evaluate an applicant's qualifications by establishing the educational and examination requirements for licensure.

(c) How this administrative regulation conforms to the content of the authorizing statutes: KRS 335.525(1)(c) requires that applicants for licensure shall have received a master's or doctoral degree in counseling or a related field from a regionally-accredited institution. KRS 335.525(1)(d) requires that applicants for licensure shall have sixty (60) graduate semester hours in specified areas. KRS 335.525(1)(f) requires that applicants achieve passing scores on the examination required by the Board. KRS 335.515(3) authorizes the board to promulgate administrative regulations necessary to carry out the provisions of KRS 335.500 to 335.599.

(d) How this administrative regulation currently assists or will assist in the effective administration of the statutes: This administrative regulation specifies the types of education and examination that are acceptable for licensure.

(2) If this is an amendment to an existing administrative regulation, provide a brief summary of:

(a) How the amendment will change this existing administrative regulation: The amendment to this administrative regulation specifies that to qualify as a degree in counseling, the degree shall be from a counseling program, include the word counseling in the degree, and include a 600 practicum or internship. The amendment to this administrative regulation specifies that to qualify as a related degree, the degree shall be include 7 of the 9 areas identified in KRS 335.525(1)(c), include a 3 hour course in Ethics with concentration on the American Counseling Association Code of Ethics, and include a 600 practicum or internship. The amendment also recognizes the NCE and the NCMHCE as the approved examinations.

(b) The necessity of the amendment to this administrative regulation: See (1)(b) above.

(c) How the amendment conforms to the content of the authorizing statutes: See (1)(c) above.

(d) How the amendment will assist in the effective administration of the statutes: The regulation specifies the requirements for obtaining the education and the examination necessary to qualify for licensure.

(3) List the type and number of individuals, businesses, organizations, or state and local governments affected by this administrative regulation: The board receives approximately 100 applications for licensure yearly.

(4) Provide an analysis of how the entities identified in question (3) will be impacted by either the implementation of this administrative regulation, if new, or by the change, if it is an amendment, including:

(a) List the actions that each of the regulated entities identified in question (3) will have to take to comply with this administrative regulation or amendment: This administrative regulation provides that applicants will have to fulfill specific educational and examination requirements before obtaining licensure.

(b) In complying with this administrative regulation or amendment, how much will it cost each of the entities identified in question (3): The costs will be dependent on the various expenses dictated by the higher education institutions from which the education will be acquired.

(c) As a result of compliance, what benefits will accrue to the entities identified in question (3): The board expects that a person applying for licensure will have acquired an education necessary to practice professional counseling in a competent manner to protect the public.

(5) Provide an estimate of how much it will cost the administrative body to implement this administrative regulation: None

(a) Initially: None

(b) On a continuing basis: None

(6) What is the source of the funding to be used for the implementation and enforcement of this administrative regulation: Agency funds.

(7) Provide an assessment of whether an increase in fees or funding will be necessary to implement this administrative regulation, if new, or by the change if it is an amendment: No fee increase is necessary to implement this administrative regulation.

(8) State whether or not this administrative regulation established any fees or directly or indirectly increased any fees: This administrative regulation does not establish any fees or directly or indirectly increase any fees

(9) TIERING: Is tiering applied? No. This administrative regulation applies to all applicants for licensure.

FISCAL NOTE ON STATE OR LOCAL GOVERNMENT

1. Does this administrative regulation relate to any program, service, or requirements of a state or local government (including cities, counties, fire departments, or school districts)? Yes

2. What units, parts or divisions of state or local government (including cities, counties, fire departments, or school districts) will be impacted by this administrative regulation?

3. Identify each state or federal statute or federal regulation that requires or authorizes the action taken by the administrative regulation.

4. Estimate the effect of this administrative regulation on the expenditures and revenues of a state or local government agency (including cities, counties, fire departments, or school districts) for the first full year the administrative regulation is to be in effect.

(a) How much revenue will this administrative regulation generate for the state or local government (including cities, counties, fire departments, or school districts) for the first year?

(b) How much revenue will this administrative regulation generate for the state or local government (including cities, counties, fire departments, or school districts) for subsequent years?

(c) How much will it cost to administer this program for the first year?

(d) How much will it cost to administer this program for subsequent years?

Note: If specific dollar estimates cannot be determined, provide a brief narrative to explain the fiscal impact of the administrative regulation.

Revenues (+/-):

Expenditures (+/-):

Other Explanation:

GENERAL GOVERNMENT CABINET
Board of Interpreters for the Deaf and Hard of Hearing
(Amendment)

201 KAR 39:030. Application; qualifications for licensure; and certification levels.

RELATES TO: KRS 309.304(1), 309.312(1)(b)

STATUTORY AUTHORITY: KRS 309.304(3), 309.312(1)(b)

NECESSITY, FUNCTION, AND CONFORMITY: KRS 309.304(3) and 309.312(1)(b) require the Kentucky Board of Interpreters for the Deaf and Hard of Hearing to promulgate an administrative regulation establishing the requirements for an applicant for licensure as an interpreter for the deaf and hard of hearing. This administrative regulation establishes these requirements.

[~~Section 1. Definition. "RID" means the Registry of Interpreters for the Deaf.~~]Section 1[~~2~~]. Application. Each applicant for a license shall submit:

(1) A completed "Application for Licensure" form to the board; and

(2) Pay the application and license fee as set forth in 201 KAR 39:040; and[.]

(3) Proof of valid certification:

a. At a level recognized by RID, with the exception of NAD III; or

b. TECUnit; or

c. Other certifications as described in 201 KAR 39:080 if applying for licensure via reciprocity.

Section 2: Incorporation by Reference. (1) "Application for Licensure" 2011 is incorporated by reference. This material may be inspected, copied, or obtained, subject to applicable copyright law, at the Division of Occupations and Professions, 911 Leawood Drive, Frankfort, Kentucky 40601, Monday through Friday, 8 a.m. to 4:30 p.m.

[~~Section 3. Certification Levels. In order to receive a license, an applicant shall submit with an application, proof of holding one (1) or more of the following certifications of competence or completion assessments:~~

~~(1) Current certification by the Registry of Interpreters for the Deaf in:~~

~~(a) Comprehensive Skills Certificate (CSC). Holders of this full certificate have demonstrated the ability to interpret between American Sign Language and Spoken English and to transliterate between spoken English and an English-based sign language;~~

~~(b) Certificate of Transliteration (CT). Holders of this certificate are recognized as fully certified in transliteration and have demonstrated the ability to transliterate between English-based sign language and spoken English in both sign-to-voice and voice-to-sign. The transliterator's ability to interpret is not considered in this certification;~~

~~(c) Certificate of Interpretation (CI). Holders of this certificate are recognized as fully certified in interpretation and have demonstrated the ability to interpret between American Sign Language and spoken English in both sign-to-voice and voice-to-sign. The interpreter's ability to transliterate is not considered in this certification;~~

~~(d) Interpreting Certificate/Transliteration Certificate (IC/TC). Holders of this partial certificate demonstrated ability to transliterate between English and a signed code for English and the ability to interpret between American Sign Language and spoken English;~~

~~(e) Reverse Skills Certificate (RSC). Holders of this full certificate demonstrated the ability to interpret between American Sign Language and English-based sign language or transliterate between spoken English and a signed code for English. Holders of this certificate are deaf or hard-of-hearing and interpretation/transliteration is rendered in American Sign Language, spoken English, a signed code for English or written English;~~

~~(f) Certified Deaf Interpreter (CDI). Holders of this certification are interpreters who are deaf or hard-of-hearing and who have demonstrated a minimum of one (1) year experience working as an interpreter, completion of at least eight (8) hours of training on the RID Code of Ethics, and eight (8) hours of training in general interpretation as it relates to the interpreter who is Deaf or Hard-of-Hearing;~~

~~(g) Certified Deaf Interpreter Provisional (CDI-P). Holders of this provisional certification are interpreters who are deaf or hard-of-hearing and who have demonstrated a minimum of one (1) year experience working as an interpreter, completion of at least eight (8) hours of training on the RID Code of Ethics, and eight (8) hours of training in general interpretation as it relates to the interpreter who is deaf or hard-of-hearing. Provisional certification is valid until one (1) year after the certified deaf interpreter written and performance test is available nationally. Provisional certificate holders shall take and pass the CDI examination in order to remain certified as a deaf interpreter;~~

~~(h) Oral Transliteration Certificate (OTC). Holders of this generalist certificate have demonstrated ability to transliterate a spoken message from a person who hears to a person who is deaf or hard-of-hearing and the ability to understand and repeat the message and intent of the speech and mouth movements of the person who is deaf and hard-of-hearing;~~

~~(i) Interpretation Certificate (IC). Holders of this partial certificate demonstrated ability to interpret between American Sign Language and spoken English;~~

~~(j) Transliteration Certificate (TC). Holders of this partial certificate demonstrated the ability to transliterate between spoken English and a signed code for English;~~

~~(k) Conditional Legal Interpreting Permit (CLIP). Holders of this conditional permit have completed a RID recognized training program designed for interpreters and transliterators who work in legal settings. Generalist certification (CI and CT, or CSC) is required prior to enrollment in the training program. This permit is valid until one (1) year after the specialist certificate: legal written and performance test is available nationally. CLIP holders shall take and pass the new legal certification examination in order to maintain certification in the specialty area of interpreting in legal settings. Holders of this conditional permit are recommended for a broad range of assignments in the legal setting;~~

~~(l) Conditional Legal Interpreting Permit-Relay (CLIP-R). Holders of this conditional permit have completed a RID-recognized training program designed for interpreters and transliterators who work in legal settings and who are also deaf or hard-of-hearing. Generalist certification for interpreters or transliterators who are deaf or hard-of-hearing (RSC or CDI-P) is required prior to enrollment in the training program. This permit is valid until one (1) year after the specialist certificate: legal written and performance test for deaf interpreters is available nationally. CLIP-R holders shall take and pass the new legal certification examination in order to maintain certification in the specialized area of interpreting in legal settings. Holders of this conditional permit are recommended for a broad range of assignments in the legal setting;~~

~~(m) Master Comprehensive Skills Certificate (MCSC). The MCSC examination was designed with the intent of testing for a higher standard of performance than the CSC. Holders of this certificate were required to hold the CSC prior to taking this exam. Holders of this certificate are recommended for a broad range of interpreting and transliterating assignments;~~

~~(n) Specialist Certificate: Legal (SC:L). Holders of this specialist certificate have demonstrated specialized knowledge of legal settings and greater familiarity with language used in the legal system. Generalist certification and documented training and experience is required prior to sitting for this exam. Holders of the SC:L are recommended for a broad range of assignments in the legal setting;~~

~~(o) Provisional Specialist Certificate: Legal (Prov. SC:L). Holders of this provisional certificate hold generalist certification and have completed RID-approved training required prior to sitting for the SC:L exam. This provisional certification is valid until one (1) year after the specialist certificate: legal written and performance test is available nationally. Holders of this certificate are recommended for assignments in the legal setting;~~

~~(p) Specialist Certificate: Performing Arts (SC:PA). Holders of this certificate were required to hold RID generalist certification (CSC) prior to sitting for this examination and have demonstrated specialized knowledge in performing arts interpretation. Holders of this certificate are recommended for a broad range of assignments in the performing arts setting;~~

~~(q) Oral Interpreting Certificate: Comprehensive (OIC:C). Holders of this generalist certificate demonstrated the ability to transliterate a spoken message from a person who hears to a person who is deaf or hard-of-hearing and the ability to understand and repeat the message and intent of the speech and mouth movements of the person who is deaf or hard-of-hearing;~~

~~(r) Oral Interpreting Certificate: Spoken to Visible (OIC:S/V). Holders of this partial certificate demonstrated the ability to transliterate a spoken message from a person who hears to a person who is deaf or hard-of-hearing. This individual received scores on the OIC:C examination which prevented the awarding of full OIC:C certification; or~~

~~(s) Oral Interpreting Certificate: Visible to Spoken (OIC:V/S). Holders of this partial certificate demonstrated ability to understand the speech and silent mouth movements of a person who is deaf or hard-of-hearing and to repeat the message for a hearing person. This individual received scores on the OIC:C examination which prevented the awarding of full OIC:C certification.~~

~~(2) Current certification by the National Association for the~~

~~Deaf in:~~

~~(a) Level V Masters;~~

~~(b) Level IV Advanced; or~~

~~(c) CUED Speech - National Training, Evaluation, and Certification Unit;~~

~~(3) Other certifications as described in 201 KAR 39:080 or as required by federal law.~~]

ARTIE GRASSMAN, Board Chair

APPROVED BY AGENCY: October 12, 2011

FILED WITH LRC: October 14, 2011 at noon

PUBLIC HEARING AND PUBLIC COMMENT PERIOD: A public hearing on this administrative regulation shall be held on November 21, 2011 at 11:00am (EST) at 911 Leawood Drive, Frankfort, Kentucky 40601. Individuals interested in being heard at this hearing shall notify this agency in writing five days prior to the hearing, of their intent to attend. If no notification of intent to attend the hearing is received by that date, the hearing may be cancelled. This hearing is open to the public. Any person who wishes to be heard will be given an opportunity to comment on the proposed administrative regulation. A transcript of the public hearing will not be made unless a written request for a transcript is made. If you do not wish to be heard at the public hearing, you may submit written comments on the proposed administrative regulation. Written comments shall be accepted until at the close of business on November 30, 2011. Send written notification of intent to be heard at the public hearing or written comments on the proposed administrative regulation to the contact person.

CONTACT PERSON: Karen Lockett, Board Administrator, Kentucky Board of Interpreters for the Deaf and Hard of Hearing, PO Box 1370, Frankfort, Kentucky 40602, phone (502) 564-3296 ex. 222 fax (502) 696-1923.

REGULATORY IMPACT ANALYSIS AND TIERING STATEMENT

Contact Person: Michael West

(1) Provide a brief summary of

(a) What this administrative regulation does: This regulation establishes application requirements for one applying to be an interpreter.

(b) The necessity of this administrative regulation: This regulation is necessary to provide appropriate procedures for the application process for becoming a licensed interpreter.

(c) How this administrative regulation conforms to the content of the authorizing statutes: The regulation is in conformity as the authorizing statute gives the board the ability to promulgate regulations generally.

(d) How this administrative regulation currently assists or will assist in the effective administration of the statutes: This regulation will assist the board in administering this program by ensuring that prospective licensees have a clear understanding of the process for obtaining a license and requirements.

(2) If this is an amendment to an existing administrative regulation, provide a brief summary of:

(a) How the amendment will change this existing administrative regulation: This amendment streamlines the existing regulation to make requirements clearer to the prospective licensee.

(b) The necessity of the amendment to this administrative regulation: The necessity of amendment is provide a clearer, more organized application process.

(c) How the amendment conforms to the content of the authorizing statutes: The regulation is in conformity as the authorizing statute gives the board the ability to promulgate regulations generally related to the practice of interpreting.

(d) How the amendment will assist in the effective administration of the statutes: The amendment will clarify the requirements for obtaining a license to potential licensees.

(3) List the type and number of individuals, businesses, organizations, or state and local governments affected by this administrative regulation: There are approximately 300 full and temporarily licensed interpreters. This regulation only impacts those applying for initial licensure.

(4) Provide an analysis of how the entities identified in question (3) will be impacted by either the implementation of this administrative regulation, if new, or by the change, if it is an amendment, including:

(a) List the actions that each of the regulated entities identified in question (3) will have to take to comply with this administrative regulation or amendment: Prospective licensees will need to meet the requirements for licensure specified in the regulation.

(b) In complying with this administrative regulation or amendment, how much will it cost each of the entities identified in question (3): Possibly fees associated with the exam that the individual selects to become licensed and normal application and licensure fees as established by regulation.

(c) As a result of compliance, what benefits will accrue to the entities identified in question (3): The prospective licensees will have the opportunity to become license if they meet the requirements of the regulation.

(5) Provide an estimate of how much it will cost to implement this administrative regulation:

(a) Initially: No new costs will be incurred by the changes.

(b) On a continuing basis: No new costs will be incurred by the changes.

(6) What is the source of the funding to be used for the implementation and enforcement of this administrative regulation: The board's operations are funded by fees paid by licensees.

(7) Provide an assessment of whether an increase in fees or funding will be necessary to implement this administrative regulation, if new, or by the change if it is an amendment: No fees will be required to implement this administrative regulation amendment.

(8) State whether or not this administrative regulation establishes any fees or directly or indirectly increases any fees: This regulation does not establish fees.

(9) TIERING: Is tiering applied? Tiering is not applied to this regulation.

FISCAL NOTE ON STATE OR LOCAL GOVERNMENT

1. Does this administrative regulation relate to any program, service, or requirements of a state or local government (including cities, counties, fire departments, or school districts)? Yes

2. What units, parts or divisions of state or local government (including cities, counties, fire departments, or school districts) will be impacted by this administrative regulation? Kentucky Board of Interpreters for the Deaf and Hard of Hearing

3. Identify each state or federal statute or federal regulation that requires or authorizes the action taken by the administrative regulation: KRS 309.304(3)

4. Estimate the effect of this administrative regulation on the expenditures and revenues of a state or local government agency (including cities, counties, fire departments, or school districts) for the first full year the administrative regulation is to be in effect. None

(a) How much revenue will this administrative regulation generate for the state or local government (including cities, counties, fire departments, or school districts) for the first year? None

(b) How much revenue will this administrative regulation generate for the state or local government (including cities, counties, fire departments, or school districts) for subsequent years? None

(c) How much will it cost to administer this program for the first year? None

(d) How much will it cost to administer this program for subsequent years? None

Note: If specific dollar estimates cannot be determined, provide a brief narrative to explain the fiscal impact of the administrative regulation.

Revenues (+/-):

Expenditures (+/-):

Other Explanation:

GENERAL GOVERNMENT CABINET
Board of Interpreters for the Deaf and Hard of Hearing
(Amendment)

201 KAR 39:040. Fees.

RELATES TO: KRS 309.312(1)(a), (4), 309.314(1), (2), (4), (6)

STATUTORY AUTHORITY: KRS 309.304(3), 309.314(1), (2), (4)

NECESSITY, FUNCTION, AND CONFORMITY: This administrative regulation is necessitated by KRS 309.304(3) and sets forth in detail all fees charged by the board.

Section 1. Fees for Licensure.[~~Application Fee.~~] (1) The application fee for initial licensure shall be fifty (50) dollars. This fee is nonrefundable.

(2) The initial licensure fee shall be one hundred (100) dollars. If the application for initial licensure is denied, the initial licensure fee may be refunded upon written request of the applicant.

(3) The annual renewal fee shall be seventy-five (75) dollars. Renewal fees shall not be refundable.[~~(2) The application fee for initial temporary license shall be fifty (50) dollars.~~

~~(3) Application fees shall not be refundable.~~]

Section 2. Fees for Temporary Licensure.[~~Initial Licensure Fee. (1) The initial licensure fee for licensure shall be $100.~~]

(1) The application fee for initial temporary licensure shall be fifty (50) dollars. This fee is nonrefundable.

(2) The initial licensure fee for a temporary license shall be fifty (50) dollars. If the application for initial temporary licensure is denied, the initial licensure fee may be refunded upon written request of the applicant.

(3) The annual fee to maintain or extend a temporary license shall be fifty (50) dollars. This fee shall be nonrefundable.[~~(3) If the initial licensure application is denied the initial licensure fee may be refunded upon written request of the applicant.~~][~~Section 3. Renewal and Extension Fees. (1) The annual renewal fee for licensure shall be seventy-five (75) dollars.~~

~~(2) The fee to extend a temporary license shall be fifty (50) dollars.~~

~~(3) Renewal fees and extension fees shall not be refundable.~~]

Section 3[~~4~~]. Late Renewal and Extension Fees. (1) All licenses renewed during the sixty (60) day grace period shall require payment of a late renewal fee of sixty (60) dollars in addition to the current renewal fee set forth in Section 1(3)[~~3~~] of this administrative regulation.

(2) All temporary licenses extended during the sixty (60) day grace period shall pay a late fee of thirty-five (35) dollars in addition to the current extension fee set forth in Section 2(3)[~~3~~] of this administrative regulation.

(3) Late renewal and extension fees shall not be refundable.

Section 4[~~5~~]. Reinstatement Fee. (1) The reinstatement fee for a license terminated pursuant to KRS 309.314(3) shall be $125, in addition to the current renewal or extension fee as set forth in Section 1(3) or 2(3)[~~3~~] of this administrative regulation.

(2) The reinstatement fees shall not be refundable.

Section 5[~~6~~]. Fee for a Reciprocal License. (1) The fee for a reciprocal license shall be $250.

(2) The reciprocal license fee shall not be refundable.

Section 6[~~8~~]. Duplicate License Fee. The fee for a duplicate license shall be ten (10) dollars.

ARTIE GRASSMAN, Board Chair

APPROVED BY AGENCY: October 12, 2011

FILED WITH LRC: October 14, 2011 at noon

PUBLIC HEARING AND PUBLIC COMMENT PERIOD: A public hearing on this administrative regulation shall be held on November 21, 2011 at 11:00am (EST) at 911 Leawood Drive, Frankfort, Kentucky 40601. Individuals interested in being heard at this hearing shall notify this agency in writing five days prior to the hearing, of their intent to attend. If no notification of intent to attend the hearing is received by that date, the hearing may be cancelled. This hearing is open to the public. Any person who wishes to be heard will be given an opportunity to comment on the proposed administrative regulation. A transcript of the public hearing will not be made unless a written request for a transcript is made. If you do not wish to be heard at the public hearing, you may submit written comments on the proposed administrative regulation. Written comments shall be accepted until at the close of business on November 30, 2011. Send written notification of intent to be heard at the public hearing or written comments on the proposed administrative regulation to the contact person.

CONTACT PERSON: Karen Lockett, Board Administrator, Kentucky Board of Interpreters for the Deaf and Hard of Hearing, PO Box 1370, Frankfort, Kentucky 40602 phone (502) 564-3296 ex. 222, fax (502) 696-1923.

REGULATORY IMPACT ANALYSIS AND TIERING STATEMENT

Contact Person: Michael West

(1) Provide a brief summary of

(a) What this administrative regulation does: This regulation establishes fees for licensure and temporary licensure as an interpreter.

(b) The necessity of this administrative regulation: This regulation is necessary to provide notice of fees for becoming a licensed interpreter.

(c) How this administrative regulation conforms to the content of the authorizing statutes: The regulation is in conformity as the authorizing statute gives the board the ability to promulgate regulations generally and charge licensure fees specifically.

(d) How this administrative regulation currently assists or will assist in the effective administration of the statutes: This regulation will assist the board in administering this program by ensuring that the Board is properly funded to carry out its duties.

(2) If this is an amendment to an existing administrative regulation, provide a brief summary of:

(a) How the amendment will change this existing administrative regulation: This amendment streamlines the existing regulation to make requirements and fees clearer to the prospective licensee.

(b) The necessity of the amendment to this administrative regulation: The necessity of amendment is to provide a clearer presentation of fees charged.

(c) How the amendment conforms to the content of the authorizing statutes: The regulation is in conformity as the authorizing statute gives the board the ability to promulgate regulations generally related to the practice of interpreting.

(d) How the amendment will assist in the effective administration of the statutes: The amendment will clarify the fees for obtaining a license to potential licensees.

(3) List the type and number of individuals, businesses, organizations, or state and local governments affected by this administrative regulation: There are approximately 300 full and temporarily licensed interpreters.

(4) Provide an analysis of how the entities identified in question (3) will be impacted by either the implementation of this administrative regulation, if new, or by the change, if it is an amendment, including:

(a) List the actions that each of the regulated entities identified in question (3) will have to take to comply with this administrative regulation or amendment: Prospective licensees will need to pay the appropriate fee as specified in the regulation.

(b) In complying with this administrative regulation or amendment, how much will it cost each of the entities identified in question (3): The fees as promulgated.

(c) As a result of compliance, what benefits will accrue to the entities identified in question (3): They will have the opportunity to become licensed.

(5) Provide an estimate of how much it will cost to implement this administrative regulation:

(a) Initially: No new costs will be incurred by the changes.

(b) On a continuing basis: No new costs will be incurred by the changes.

(6) What is the source of the funding to be used for the implementation and enforcement of this administrative regulation: The board's operations are funded by fees paid by licensees.

(7) Provide an assessment of whether an increase in fees or funding will be necessary to implement this administrative regulation, if new, or by the change if it is an amendment: No fees will be required to implement this administrative regulation amendment.

(8) State whether or not this administrative regulation estab-

lishes any fees or directly or indirectly increases any fees: This regulation established but does not change fees from their current level.

(9) TIERING: Is tiering applied? Tiering is not applied to this regulation.

FISCAL NOTE ON STATE OR LOCAL GOVERNMENT

1. Does this administrative regulation relate to any program, service, or requirements of a state or local government (including cities, counties, fire departments, or school districts)? Yes

2. What units, parts or divisions of state or local government (including cities, counties, fire departments, or school districts) will be impacted by this administrative regulation? Kentucky Board of Interpreters for the Deaf and Hard of Hearing

3. Identify each state or federal statute or federal regulation that requires or authorizes the action taken by the administrative regulation: KRS 309.304(3)

4. Estimate the effect of this administrative regulation on the expenditures and revenues of a state or local government agency (including cities, counties, fire departments, or school districts) for the first full year the administrative regulation is to be in effect. The amount of the licensure fees multiplied by the number of licensees at that time.

(a) How much revenue will this administrative regulation generate for the state or local government (including cities, counties, fire departments, or school districts) for the first year? The amount of the licensure fees multiplied by the number of licensees at that time.

(b) How much revenue will this administrative regulation generate for the state or local government (including cities, counties, fire departments, or school districts) for subsequent years? The amount of the licensure fees multiplied by the number of licensees at that time.

(c) How much will it cost to administer this program for the first year? None

(d) How much will it cost to administer this program for subsequent years? None

Note: If specific dollar estimates cannot be determined, provide a brief narrative to explain the fiscal impact of the administrative regulation.

Revenues (+/-):

Expenditures (+/-):

Other Explanation:

GENERAL GOVERNMENT CABINET
Board of Interpreters for the Deaf and Hard of Hearing
(Amendment)

201 KAR 39:050. Renewal of licenses, [~~and~~] extension of temporary licenses and reinstatement.

RELATES TO: KRS 309.304(5), 309.312, 309.314

STATUTORY AUTHORITY: KRS 309.304(3), 309.312, 309.314

NECESSITY, FUNCTION, AND CONFORMITY: KRS 309.314 establishes requirements for annual renewal of the license. KRS 309.312 establishes requirements for extension of temporary licenses. This administrative regulation sets forth that process in detail.

Section 1. [~~Definitions. (1) "CDI" means a Certified Deaf Interpreter.~~

~~(2) "EIPA" means Education Interpreter Performance Assessment.~~

~~(3) "ESSE: I" means Educational Signs Skills Evaluation: Interpreting.~~

~~(4) "ESSE: R" means Educational Signs Skills Evaluation: Receptive.~~

~~(5) "NAD" means National Association for the Deaf.~~

~~(6) "NIC" means National Interpreter Certification.~~

~~(7) "Nondegree applicant" means an individual who has either no degree or a degree other than an interpreter training program degree.~~

~~(8) "RID" means Registry of the Interpreters for the Deaf.~~

~~(9) "SCPI" means Sign Communication Proficiency Interview.~~

~~Section 2~~.] Renewal of Licenses. A person licensed as an interpreter shall renew that license annually, as required by KRS 309.314(1) by submitting the following to the board:

(1) A completed "License Renewal Application" form;

(2) The renewal fee as established in 201 KAR 39:040[~~, Section 3~~];

(3) Proof of current certification of the licensee as established in 201 KAR 39:030; and

(4) Documentation of completion of the continuing education requirement established in 201 KAR 39:090[~~, Section 2(1)~~].

Section 2[~~3~~]. Grace Period. A license not renewed by July 1, may be renewed during the following sixty (60) day period, in accordance with KRS 309.314[~~(2)~~], by:

(1) Complying with the requirements established in Section 1 of this administrative regulation; and

(2) Submitting the late renewal fee established in 201 KAR 39:040, [~~Section 4(1)~~].

Section 3[4]. (1) Reinstatement. A license not renewed prior to the close of the sixty (60) day grace period, in accordance with KRS 309.314(4), may be reinstated upon:

(a) Payment of the renewal fee plus a reinstatement fee as established by 201 KAR 39:040, Section 4(1)[~~5(1)~~];

(b) Submission of a completed "License Reinstatement Application" or "Temporary License Reinstatement Application" Form to the board;

(c) Submission of evidence of completion of continuing education as required by 201 KAR 39:090, Section 10; and

(d) Completion of the requirements of Section 4[~~5~~]of this administrative regulation.

(2) The board may in its discretion reinstate a temporary license if and only if the licensee submits proof sufficient to the board of:

(a) Medical disability of the licensee;

(b) Illness of the licensee or an immediate family member;

(c) Death or serious injury of an immediate family member; or

(d) For good cause shown.

(3) A request for reinstatement of a temporary license involving medical disability or illness shall be:

(a) Submitted by the person holding a license; and

(b) Accompanied by a verifying document signed by a licensed physician.

Section 4[~~5~~]. Extensions of Temporary Licenses. To request an extension of a temporary license:

(1) A temporary licensee shall submit:

(a) A completed "Temporary License Extension Application" form;

(b) The appropriate fee set forth in 201 KAR 39:040;

(c) Proof of completion of the continuing education requirements set forth in 201 KAR 39:090;

(d) A letter recommending extension written by the Mentor(s) of Record for the previous licensure term which describes the progress achieved by the Mentee. The board may waive this requirement upon submission of proof by the licensee that the licensee has substantially met the goals stated in the plan of supervision; and

(e) A revised plan of supervision for the upcoming licensure year.

(2) A deaf or hard of hearing temporary licensee shall submit:

(a) Upon applying for a first, second, or third extension:

i. A completed "Temporary License Extension Application" form;

ii. The appropriate fee set forth in 201 KAR 39:040;

iii. Proof of completion of the continuing education requirements set forth in 201 KAR 39:090;

iv. A letter recommending extension written by the Mentor(s) of Record which describes the progress achieved by the Mentee. The board may waive this requirement upon submission of proof by the licensee that the licensee has substantially met the goals stated in the plan of supervision; and

v. A revised plan of supervision for the upcoming licensure year.

(b) Upon applying for a fourth and subsequent extensions:

i. All requirements listed in Section (a); and

ii. Proof of passage of the RID CDI Knowledge Exam.

(3) The extensions of temporary licenses under this section are subject to the term limitations imposed by 201 KAR 39:070(2).[~~Effective July 1, 2007, an application for extension of a temporary license for 2007/2008 shall be classified as a first renewal and the applicant's first request for an extension. Subsequent requests for extension shall meet the requirements of subsection 1, 2, or 3 of this section. An applicant who comes into the system after July 1, 2007 shall meet the applicable requirements for the first request for an extension.~~

~~(1) Requirements for graduates of a nondegreed interpreter training program.~~

~~(a) A graduate of a baccalaureate or associate interpreter training program may apply on or before July 1, for a first extension of a temporary license by submitting:~~

~~1. A copy of the test results of either the RID written exam or the NIC written exam; or~~

~~2. Documentation of a valid NAD Level III certification.~~

~~(b) An extension shall be valid for one (1) year.~~

~~(c) In order to obtain a second one (1) year extension, a graduate shall submit, on or before July 1, proof that the graduate:~~

~~1. Has taken and passed either the RID written exam or NIC written exam; or~~

~~2. Holds a valid NAD III certification.~~

~~(d) In order to obtain a third and final one (1) year extension, a graduate shall submit, on or before July 1, proof that the graduate has taken either the RID performance exam or the NIC performance exam.~~

~~(e) An extension may be granted pending test results.~~

~~(2) Requirements for nondegreed applicants.~~

~~(a) NAD III or SCPI: advanced certified.~~

~~1. A nondegreed applicant who is either NAD III or SCPI: advanced certified and who interprets in both the community and a P-12 educational setting is entitled to a maximum of three (3) extensions.~~

~~2. To obtain the first extension, an applicant shall submit, on or before July 1, proof of:~~

~~a. Valid NAD III certification; or~~

~~b. Having passed the NIC or RID written exam.~~

~~3. To obtain a second extension, an applicant shall submit, on or before July 1, proof of:~~

~~a. Certification of NAD III or SCPI: advanced; and~~

~~b. Having taken either the RID or NIC performance exam.~~

~~4. To obtain a third and final extension, an applicant shall submit, on or before July 1, proof of:~~

~~a. NAD III certification; or~~

~~b. SCPI: advanced certification.~~

~~(b) Nondegreed applicants who are not NAD III certified and work in a P-12 educational setting.~~

~~1. In order to obtain a first extension, an applicant shall submit, on or before July 1, proof of:~~

~~a. An EIPA score of three and five tenths (3.5) or higher;~~

~~b. An ESSE: I score of four and zero tenths (4.0) or higher and an ESSE: R score of four and zero tenths (4.0) or higher;~~

~~c. SCPI: advanced certification; or~~

~~d. Test results of either the RID written exam or the NIC written exam.~~

~~2. In order to obtain a second extension, an applicant shall submit, on or before July 1, proof that the applicant has taken and passed the RID written exam or the NIC written exam.~~

~~3. In order to obtain a third and final extension, an applicant shall submit, on or before July 1, proof of having taken either the RID performance exam or the NIC performance exam.~~

~~(c) Deaf applicants interpreting in the community and a P-12 educational setting.~~

~~1. In order to obtain a first extension, a deaf applicant shall submit, on or before July 1, a copy of the test results of the CDI written exam.~~

~~2. In order to obtain a second extension, a deaf applicant shall submit, on or before July 1 of the fifth year following the first extension, proof of having passed the CDI written exam.~~

~~3. In order to obtain a third and final extension, a deaf applicant shall submit, on or before July 1 of the fifth year following the second extension, proof of having taken the CDI performance exam.~~

~~Section 6. To request an extension of a temporary license a licensee shall submit to the board:~~

~~(1) A completed "Temporary License Extension Application" Form;~~

~~(2) A report from a supervisor describing the progress achieved by the person who was supervised and a recommendation from the supervisor as to whether the license should be extended;~~

~~(3) Proof of completion of the continuing education requirements as set forth in 201 KAR 39:090;~~

~~(4) An explanation of the need for the extension request; and~~

~~(5) The fee set forth in 201 KAR 39:040, Section 4(2).~~]

Section 5[~~7~~]. Incorporation by Reference. (1) The following material is incorporated by reference:

(a) "License Renewal Application [~~2001~~]" 2011 form;

(b) "License Reinstatement Application [~~2001~~]" 2011 form; and

(c) "Temporary License Extension Application[~~Temporary License Extension, 2001~~]" 2011 form.

(2) This material may be inspected, copied, or obtained, subject to applicable copyright law, at the Division of Occupations and Professions, 911 Leawood Drive, Frankfort, Kentucky 40601, Monday through Friday, 8 a.m. to 4:30 p.m.

ARTIE GRASSMAN, Board Chair

APPROVED BY AGENCY: October 13, 2011

FILED WITH LRC: October 14, 2011 at noon

PUBLIC HEARING AND PUBLIC COMMENT PERIOD: A public hearing on this administrative regulation shall be held on November 21, 2011 at 11:00am (EST) at 911 Leawood Drive, Frankfort, Kentucky 40601. Individuals interested in being heard at this hearing shall notify this agency in writing five days prior to the hearing, of their intent to attend. If no notification of intent to attend the hearing is received by that date, the hearing may be cancelled. This hearing is open to the public. Any person who wishes to be heard will be given an opportunity to comment on the proposed administrative regulation. A transcript of the public hearing will not be made unless a written request for a transcript is made. If you do not wish to be heard at the public hearing, you may submit written comments on the proposed administrative regulation. Written comments shall be accepted until at the close of business on November 30, 2011. Send written notification of intent to be heard at the public hearing or written comments on the proposed administrative regulation to the contact person.

CONTACT PERSON: Karen Lockett, Board Administrator, Kentucky Board of Interpreters for the Deaf and Hard of Hearing, PO Box 1370, Frankfort, Kentucky 40602, phone (502) 564-3296 ex. 222 fax (502) 696-1923.

REGULATORY IMPACT ANALYSIS AND TIERING STATEMENT

Contact Person: Michael West

(1) Provide a brief summary of

(a) What this administrative regulation does: This regulation establishes renewal and extension requirements for interpreters.

(b) The necessity of this administrative regulation: This regulation is necessary to provide notice of the process for renewing or extending ones license to interpret and the associated requirements.

(c) How this administrative regulation conforms to the content of the authorizing statutes: The regulation is in conformity as the authorizing statute gives the board the ability to promulgate regulations generally.

(d) How this administrative regulation currently assists or will assist in the effective administration of the statutes: This regulation will assist the board in administering this program by ensuring that licensees are on notice of the requirements for renewal or extension of their licenses.

(2) If this is an amendment to an existing administrative regula-

tion, provide a brief summary of:

(a) How the amendment will change this existing administrative regulation: This amendment streamlines the existing regulation to make requirements clearer to the prospective licensee.

(b) The necessity of the amendment to this administrative regulation: The necessity of amendment is to provide a clearer presentation of the requirements.

(c) How the amendment conforms to the content of the authorizing statutes: The regulation is in conformity as the authorizing statute gives the board the ability to promulgate regulations generally related to the practice of interpreting.

(d) How the amendment will assist in the effective administration of the statutes: The amendment will clarify the fees for obtaining a license to potential licensees.

(3) List the type and number of individuals, businesses, organizations, or state and local governments affected by this administrative regulation: There are approximately 300 full and temporarily licensed interpreters.

(4) Provide an analysis of how the entities identified in question (3) will be impacted by either the implementation of this administrative regulation, if new, or by the change, if it is an amendment, including:

(a) List the actions that each of the regulated entities identified in question (3) will have to take to comply with this administrative regulation or amendment: Licensees will need to meet the requirements for renewal or extensions of their licenses.

(b) In complying with this administrative regulation or amendment, how much will it cost each of the entities identified in question (3): The fees as promulgated in 201 KAR 39:040 and any costs associated with testing as required. These costs have not changed as a result of this amendment.

(c) As a result of compliance, what benefits will accrue to the entities identified in question (3): They will have the opportunity to have their license renewed or extended.

(5) Provide an estimate of how much it will cost to implement this administrative regulation:

(a) Initially: No new costs will be incurred by the changes.

(b) On a continuing basis: No new costs will be incurred by the changes.

(6) What is the source of the funding to be used for the implementation and enforcement of this administrative regulation: The board's operations are funded by fees paid by licensees.

(7) Provide an assessment of whether an increase in fees or funding will be necessary to implement this administrative regulation, if new, or by the change if it is an amendment: No fees will be required to implement this administrative regulation amendment.

(8) State whether or not this administrative regulation establishes any fees or directly or indirectly increases any fees: This regulation established but does not change fees from their current level.

(9) TIERING: Is tiering applied? Tiering is not applied to this regulation.

FISCAL NOTE ON STATE OR LOCAL GOVERNMENT

1. Does this administrative regulation relate to any program, service, or requirements of a state or local government (including cities, counties, fire departments, or school districts)? Yes

2. What units, parts or divisions of state or local government (including cities, counties, fire departments, or school districts) will be impacted by this administrative regulation? Kentucky Board of Interpreters for the Deaf and Hard of Hearing

3. Identify each state or federal statute or federal regulation that requires or authorizes the action taken by the administrative regulation: KRS 309.304(3)

4. Estimate the effect of this administrative regulation on the expenditures and revenues of a state or local government agency (including cities, counties, fire departments, or school districts) for the first full year the administrative regulation is to be in effect. None

(a) How much revenue will this administrative regulation generate for the state or local government (including cities, counties, fire departments, or school districts) for the first year? None

(b) How much revenue will this administrative regulation generate for the state or local government (including cities, counties, fire departments, or school districts) for subsequent years? None

(c) How much will it cost to administer this program for the first year? None

(d) How much will it cost to administer this program for subsequent years? None

Note: If specific dollar estimates cannot be determined, provide a brief narrative to explain the fiscal impact of the administrative regulation.

Revenues (+/-):

Expenditures (+/-):

Other Explanation:

GENERAL GOVERNMENT CABINET
Board of Interpreters for the Deaf and Hard of Hearing
(Amendment)

201 KAR 39:060. Reinstatement of license subject to disciplinary action.

RELATES TO: KRS 309.318

STATUTORY AUTHORITY: KRS 309.304(3)

NECESSITY, FUNCTION, AND CONFORMITY: KRS 309.318 authorizes the board to discipline a licensee for violation of the statutes and administrative regulations governing the practice of interpreting. KRS 309.318(5) permits a person whose license has been revoked to apply for reinstatement after five (5) years. This administrative regulation establishes the requirements for reinstatement of a license that has been the subject of disciplinary action by the board.

Section 1. [~~Definition. "A license voluntarily surrendered as if revoked" means the process by which a person who holds a license issued by the board, knowingly and willingly, returns the license to the board, forfeiting all rights and privileges associated with that license, in settlement of a disciplinary action initiated by the board.~~

~~Section 2.~~]Reinstatement of a License Revoked by Disciplinary Action of the Board. (1) If a license has been revoked, an individual may apply for reinstatement by:

(a) Submitting a completed "License Reinstatement Application" Form;

(b) Paying the initial licensure fee as set forth in 201 KAR 39:040[~~, Section 2~~] and the reinstatement fee as set forth in 201 KAR 39:040[~~, Section 5~~];

(c) Submitting proof of qualification for licensure as set forth in 201 KAR 39:030[~~, Sections 3 and 4~~]; and

(d) Show evidence of completion of fifteen (15) hours of continuing education for each year since the date of revocation in accordance with the requirements established in 201 KAR 39:090[~~, Section 10(1)~~].

(2)(a) The board shall review the reinstatement request and determine whether to reinstate the license.

(b) Based upon the information submitted the board shall determine if the conditions for reinstatement listed in KRS 309.318(5) have been met.

(c) If the board finds that the conditions for reinstatement have been met, it shall reinstate the license.

(d) If the board finds that the conditions for reinstatement have not been met, or the applicant failed to comply with the requirements of this administrative regulation it shall refuse to reinstate the license. The applicant may then request, and the board shall grant a hearing on the denial conducted pursuant to KRS Chapter 13B.

Section 2[3]. Reinstatement of a License which was Voluntarily Surrendered as if Revoked. (1) If a license has been voluntarily surrendered as if revoked, an individual may apply for reinstatement by:

(a) Meeting of all of the requirements of Section 1(1)[~~2(1)~~] of this administrative regulation; and

(b) Providing documentation of the successful completion of all requirements established in the agreed order that resulted in the

voluntary surrender of the license as if revoked.

(2) For a request for reinstatement of a license voluntarily surrendered as if revoked, the board shall review the reinstatement request, make its determination, and provide for an appeal in accordance with Section 1(2)(a)[~~2(2)(a)~~] through (d) of this administrative regulation.

Section 3[4]. Incorporation by Reference. (1) "License Reinstatement Application" Form, 2011[~~2001~~], is incorporated by reference.

(2) This material may be inspected, copied, or obtained, subject to applicable copyright law, at the Kentucky Board of Interpreters for the Deaf and Hard of Hearing, 911 Leawood Drive, Frankfort, Kentucky 40601, Monday through Friday 8 a.m. to 4:30 p.m.

ARTIE GRASSMAN, Board Chair

APPROVED BY AGENCY: October 12, 2011

FILED WITH LRC: October 14, 2011 at noon

PUBLIC HEARING AND PUBLIC COMMENT PERIOD: A public hearing on this administrative regulation shall be held on November 21, 2011 at 11:00am (EST) at 911 Leawood Drive, Frankfort, Kentucky 40601. Individuals interested in being heard at this hearing shall notify this agency in writing five days prior to the hearing, of their intent to attend. If no notification of intent to attend the hearing is received by that date, the hearing may be cancelled. This hearing is open to the public. Any person who wishes to be heard will be given an opportunity to comment on the proposed administrative regulation. A transcript of the public hearing will not be made unless a written request for a transcript is made. If you do not wish to be heard at the public hearing, you may submit written comments on the proposed administrative regulation. Written comments shall be accepted until at the close of business on November 30, 2011. Send written notification of intent to be heard at the public hearing or written comments on the proposed administrative regulation to the contact person.

CONTACT PERSON: Karen Lockett, Board Administrator, Kentucky Board of Interpreters for the Deaf and Hard of Hearing, PO Box 1370, Frankfort, Kentucky 40602, phone (502) 564-3296 ex. 222, fax (502) 696-1923.

REGULATORY IMPACT ANALYSIS AND TIERING STATEMENT

Contact Person: Michael West

(1) Provide a brief summary of

(a) What this administrative regulation does: This regulation creates a procedure for the reinstatement of a licensed terminated based on a previous disciplinary action.

(b) The necessity of this administrative regulation: This regulation provides a procedure for the reinstatement of a licensed terminated based on a previous disciplinary action.

(c) How this administrative regulation conforms to the content of the authorizing statutes: The regulation is in conformity as the authorizing statute gives the board the ability to promulgate regulations generally.

(d) How this administrative regulation currently assists or will assist in the effective administration of the statutes: This regulation will assist the board by creating a procedure for the reinstatement of a licensed terminated based on a previous disciplinary action.

(2) If this is an amendment to an existing administrative regulation, provide a brief summary of:

(a) How the amendment will change this existing administrative regulation: This amendment streamlines the existing regulation to make the procedure for the reinstatement of a licensed terminated based on a previous disciplinary action clearer to the prospective licensee.

(b) The necessity of the amendment to this administrative regulation: The necessity of amendment is to provide a clearer presentation of the procedure for the reinstatement of a licensed terminated based on a previous disciplinary action.

(c) How the amendment conforms to the content of the authorizing statutes: The regulation is in conformity as the authorizing statute gives the board the ability to promulgate regulations generally related to the practice of interpreting.

(d) How the amendment will assist in the effective administration of the statutes: The amendment will clarify the procedure for the reinstatement of a licensed terminated based on a previous disciplinary action to potential licensees.

(3) List the type and number of individuals, businesses, organizations, or state and local governments affected by this administrative regulation: There are approximately 300 full and temporarily licensed interpreters.

(4) Provide an analysis of how the entities identified in question (3) will be impacted by either the implementation of this administrative regulation, if new, or by the change, if it is an amendment, including:

(a) List the actions that each of the regulated entities identified in question (3) will have to take to comply with this administrative regulation or amendment: Prospective licensees will need to meet the requirements for reinstatement of their licenses.

(b) In complying with this administrative regulation or amendment, how much will it cost each of the entities identified in question (3): The fees as promulgated in 201 KAR 39:040 and any costs associated with testing as required. These costs have not changed as a result of this amendment.

(c) As a result of compliance, what benefits will accrue to the entities identified in question (3): They will have the opportunity to have their license reinstated if the requirements are met.

(5) Provide an estimate of how much it will cost to implement this administrative regulation:

(a) Initially: No new costs will be incurred by the changes.

(b) On a continuing basis: No new costs will be incurred by the changes.

(6) What is the source of the funding to be used for the implementation and enforcement of this administrative regulation: The board's operations are funded by fees paid by licensees.

(7) Provide an assessment of whether an increase in fees or funding will be necessary to implement this administrative regulation, if new, or by the change if it is an amendment: No fees will be required to implement this administrative regulation amendment.

(8) State whether or not this administrative regulation establishes any fees or directly or indirectly increases any fees: This regulation established but does not change fees from their current level.

(9) TIERING: Is tiering applied? Tiering is not applied to this regulation.

FISCAL NOTE ON STATE OR LOCAL GOVERNMENT

1. Does this administrative regulation relate to any program, service, or requirements of a state or local government (including cities, counties, fire departments, or school districts)? Yes

2. What units, parts or divisions of state or local government (including cities, counties, fire departments, or school districts) will be impacted by this administrative regulation? Kentucky Board of Interpreters for the Deaf and Hard of Hearing

3. Identify each state or federal statute or federal regulation that requires or authorizes the action taken by the administrative regulation: KRS 309.304(3)

4. Estimate the effect of this administrative regulation on the expenditures and revenues of a state or local government agency (including cities, counties, fire departments, or school districts) for the first full year the administrative regulation is to be in effect. None

(a) How much revenue will this administrative regulation generate for the state or local government (including cities, counties, fire departments, or school districts) for the first year? None

(b) How much revenue will this administrative regulation generate for the state or local government (including cities, counties, fire departments, or school districts) for subsequent years? None

(c) How much will it cost to administer this program for the first year? None

(d) How much will it cost to administer this program for subsequent years? None

Note: If specific dollar estimates cannot be determined, provide a brief narrative to explain the fiscal impact of the administrative regulation.

Revenues (+/-):

Expenditures (+/-):

Other Explanation:

GENERAL GOVERNMENT CABINET
Board of Interpreters for the Deaf and Hard of Hearing
(Amendment)

201 KAR 39:070. Application and[~~,~~] qualifications[~~, and certification levels~~] for temporary licensure.

RELATES TO: KRS 309.312(1)(b), (3)
STATUTORY AUTHORITY: KRS 309.304(3), 309.312
NECESSITY, FUNCTION, AND CONFORMITY: KRS 309.304(3) and 309.312(1)(b) and (3) require the board to promulgate an administrative regulation establishing the requirements for an applicant for temporary licensure as an interpreter for the deaf and hard of hearing. This administrative regulation establishes the requirements regarding temporary licensure.

Section 1.[~~Definitions. (1) "Board-approved mentor" means a licensed interpreter:~~
~~(a) In this state or the resident of another state who can meet the requirements for licensure in this state as set forth in KRS Chapter 309 and the administrative regulations promulgated pursuant thereto;~~
~~(b) Who holds a valid certificate from the NAD Level IV or V, the RID, or the NAD-RID National Interpreter Certification (NIC) for a minimum of three (3) years prior to serving as a mentor; and~~
~~(c) Who has completed forty-five (45) hours of continuing education since obtaining certification.~~
~~(2) "NAD" means National Association for the Deaf.~~
~~(3) "RID" means Registry of the Interpreters for the Deaf.~~
~~(4) "SCPI" means Sign Communication Proficiency Interview.~~
~~Section 2.~~] Application for Licensure. (1) Each applicant shall submit:
(a) A completed "Application for Licensure" Form;
(b) The appropriate application and licensure fees as required by 201 KAR 39:040[~~, Sections 1(2) and 2(2)~~];
(c) A "Plan of Supervision for a Temporary Licensee" from a board approved mentor; [~~and~~]
(d) Proof documenting passage of the NIC or EIPA Knowledge Exam. If the interpreter is deaf or hard of hearing, 18 hours of continuing education focused on CDI preparation may be obtained in lieu of this requirement; and[~~Certification of competence from the NAD in Level III Generalist.~~]
(e) Proof of achieving or holding one of the following:
1. Valid NAD Level III as a currently certified member; or
2. SCPI Advanced or Better; or
3. SLPI Advanced or Better; or
4. ASLPI of three and a half (3.5) or Better; or
5. EIPA of three (3.0) or Better.

Section 2. Temporary Licensure Duration (1) Individuals may hold temporary licensure for a maximum of five (5) consecutive licensure years from the date of initial issuance.
(2) Individuals who are deaf or hard of hearing may hold temporary licensure for a maximum of ten (10) consecutive licensure years from the date of initial issuance.
(3) Any reinstatement or extension of a temporary license must occur within the duration of the cap.[~~(2) A deaf or hard of hearing applicant shall submit:~~
~~(a) SCPI: advanced plus certification or an American Sign Language Proficiency Interview (ASLPI) score of four (4) or better;~~
~~(b) Certificate or proof of a minimum of eight (8) hours of RID-approved training on the role and function of the deaf interpreter; and~~
~~(c) Certificate or proof of a minimum of eight (8) hours of RID-approved training on the NAD-RID code of professional conduct or RID code of ethics.~~
~~(3) In lieu of the certification required in subsection (1)(d) of this section, an applicant working in a P-12 educational setting may submit proof of successful completion of the:~~
~~(a) SCPI - intermediate plus level or above; or~~
~~(b) Educational Interpreter Performance Assessment (EIPA) with a score of three and zero tenths (3.0) or above; or~~
~~(c) Educational Sign Skills Evaluation: Interpreting (ESSE: I) with a score of 3.5 - 3.9 and Educational Sign Skills Evaluation: Receptive (ESSE: R) with a score of 3.5 - 3.9;~~
~~(d) Eight (8) hours training on the role and function of an interpreter; and~~
~~(e) Certificate or proof of a minimum of eight (8) hours of ethics-related training.~~
~~(4) In lieu of the certification required in subsection (1)(d) of this section, an applicant working in a community setting shall submit proof of:~~
~~(a)1. SCPI - advanced or above; or~~
~~2. American Sign Language Proficiency Interview score of four and zero tenths (4.0) or better; and~~
~~(b) Eight (8) hours of training on the role and function of an interpreter; and~~
~~(c) Certificate or proof of a minimum of eight (8) hours of ethics-related training.~~]

Section 3. Supervision Requirements. (1) Each applicant for a temporary license shall be trained and supervised by a board approved mentor.
(2) During the period of training and supervision the mentor shall meet with each licensee on a quarterly basis. One (1) of these meetings shall be on a face-to-face basis with each person being mentored. The remaining meetings may be through the use of video or video teleconferencing or any other method outlined in the approved plan of supervision.
(3) A mentor shall contract with no more than twenty (20) temporary licensees during a calendar year.

Section 4. Incorporation by Reference. (1) The following material is incorporated by reference:
(a) "Plan of Supervision for [~~a~~] Temporary License[~~e~~]" 2011[~~2001~~].
(2) This material may be inspected, copied, or obtained, subject to applicable copyright law, at the Division of Occupations and Professions, 911 Leawood Drive, Frankfort, Kentucky 40601, Monday through Friday, 8 a.m. to 4:30 p.m.

ARTIE GRASSMAN, Board Chair
APPROVED BY AGENCY: October 12, 2011
FILED WITH LRC: October 14, 2011 at noon
PUBLIC HEARING AND PUBLIC COMMENT PERIOD: A public hearing on this administrative regulation shall be held on November 21, 2011 at 11:00am (EST) at 911 Leawood Drive, Frankfort, Kentucky 40601. Individuals interested in being heard at this hearing shall notify this agency in writing five days prior to the hearing, of their intent to attend. If no notification of intent to attend the hearing is received by that date, the hearing may be cancelled. This hearing is open to the public. Any person who wishes to be heard will be given an opportunity to comment on the proposed administrative regulation. A transcript of the public hearing will not be made unless a written request for a transcript is made. If you do not wish to be heard at the public hearing, you may submit written comments on the proposed administrative regulation. Written comments shall be accepted until at the close of business on November 30, 2011. Send written notification of intent to be heard at the public hearing or written comments on the proposed administrative regulation to the contact person.
CONTACT PERSON: Karen Lockett, Board Administrator, Kentucky Board of Interpreters for the Deaf and Hard of Hearing, PO Box 1370, Frankfort, Kentucky 40602 phone (502) 564-3296 ex. 222, fax (502) 696-1923.

REGULATORY IMPACT ANALYSIS AND TIERING STATEMENT

Contact Person: Michael West
(1) Provide a brief summary of
(a) What this administrative regulation does: This regulation creates application requirements for initial temporary licensure.
(b) The necessity of this administrative regulation: This regulation provides a procedure for obtaining and requirements for obtaining an initial temporary license.

(c) How this administrative regulation conforms to the content of the authorizing statutes: The regulation is in conformity as the authorizing statute gives the board the ability to promulgate regulations generally.

(d) How this administrative regulation currently assists or will assist in the effective administration of the statutes: This regulation will assist the board by creating a procedure for obtaining a temporary license.

(2) If this is an amendment to an existing administrative regulation, provide a brief summary of:

(a) How the amendment will change this existing administrative regulation: This amendment streamlines the existing regulation to make the procedure for obtaining a temporary license clearer to the prospective licensee.

(b) The necessity of the amendment to this administrative regulation: The necessity of amendment is to provide a clearer process for obtaining temporary licensure.

(c) How the amendment conforms to the content of the authorizing statutes: The regulation is in conformity as the authorizing statute gives the board the ability to promulgate regulations generally related to the practice of interpreting.

(d) How the amendment will assist in the effective administration of the statutes: The amendment will clarify the procedure for obtaining temporary licensure.

(3) List the type and number of individuals, businesses, organizations, or state and local governments affected by this administrative regulation: There are approximately 300 full and temporarily licensed interpreters. This regulation only impacts those applying for initial temporary licensure.

(4) Provide an analysis of how the entities identified in question (3) will be impacted by either the implementation of this administrative regulation, if new, or by the change, if it is an amendment, including:

(a) List the actions that each of the regulated entities identified in question (3) will have to take to comply with this administrative regulation or amendment: Prospective temporary licensees will need to meet the requirements for licensure.

(b) In complying with this administrative regulation or amendment, how much will it cost each of the entities identified in question (3): The fees as promulgated in 201 KAR 39:040 and any costs associated with testing as required. These costs have not changed as a result of this amendment.

(c) As a result of compliance, what benefits will accrue to the entities identified in question (3): They will have the opportunity to obtain temporary licensure if they meet the stated requirements.

(5) Provide an estimate of how much it will cost to implement this administrative regulation:

(a) Initially: No new costs will be incurred by the changes.

(b) On a continuing basis: No new costs will be incurred by the changes.

(6) What is the source of the funding to be used for the implementation and enforcement of this administrative regulation: The board's operations are funded by fees paid by licensees.

(7) Provide an assessment of whether an increase in fees or funding will be necessary to implement this administrative regulation, if new, or by the change if it is an amendment: No fees will be required to implement this administrative regulation amendment.

(8) State whether or not this administrative regulation establishes any fees or directly or indirectly increases any fees: This regulation established but does not change fees from their current level.

(9) TIERING: Is tiering applied? Tiering is not applied to this regulation.

FISCAL NOTE ON STATE OR LOCAL GOVERNMENT

1. Does this administrative regulation relate to any program, service, or requirements of a state or local government (including cities, counties, fire departments, or school districts)? Yes

2. What units, parts or divisions of state or local government (including cities, counties, fire departments, or school districts) will be impacted by this administrative regulation? Kentucky Board of Interpreters for the Deaf and Hard of Hearing

3. Identify each state or federal statute or federal regulation that requires or authorizes the action taken by the administrative regulation: KRS 309.304(3)

4. Estimate the effect of this administrative regulation on the expenditures and revenues of a state or local government agency (including cities, counties, fire departments, or school districts) for the first full year the administrative regulation is to be in effect. None

(a) How much revenue will this administrative regulation generate for the state or local government (including cities, counties, fire departments, or school districts) for the first year? None

(b) How much revenue will this administrative regulation generate for the state or local government (including cities, counties, fire departments, or school districts) for subsequent years? None

(c) How much will it cost to administer this program for the first year? None

(d) How much will it cost to administer this program for subsequent years? None

Note: If specific dollar estimates cannot be determined, provide a brief narrative to explain the fiscal impact of the administrative regulation.

Revenues (+/-):

Expenditures (+/-):

Other Explanation:

GENERAL GOVERNMENT CABINET
Board of Interpreters for the Deaf and Hard of Hearing
(Amendment)

201 KAR 39:080. Reciprocity.

RELATES TO: KRS 309.304(1), 309.312(4)

STATUTORY AUTHORITY: KRS 309.304(3)

NECESSITY, FUNCTION, AND CONFORMITY: KRS 309.312(4) requires the board to promulgate an administrative regulation governing the granting of a license through reciprocity. This administrative regulation establishes the requirements for licensure by reciprocity.

Section 1. An applicant for licensure by reciprocity shall:

(1) Hold a current, valid license in good standing to practice interpreting which has been granted by at least one (1) state, U.S. Territory, or the District of Columbia, or a Canadian province, which maintains an interpreter registration board;

(2) The standards or requirements for having granted that license shall meet or exceed the licensure requirements contained in KRS Chapter 309 and the accompanying administrative regulations;

(3) Not have a report of disciplinary action pending in another state or province; and

(4) Submit the reciprocity fee as set forth in 201 KAR 39:040[~~, Section 7~~].

ARTIE GRASSMAN, Board Chair

APPROVED BY AGENCY: October 12, 2011

FILED WITH LRC: October 14, 2011 at noon

PUBLIC HEARING AND PUBLIC COMMENT PERIOD: A public hearing on this administrative regulation shall be held on November 21, 2011 at 11:00am (EST) at 911 Leawood Drive, Frankfort, Kentucky 40601. Individuals interested in being heard at this hearing shall notify this agency in writing five days prior to the hearing, of their intent to attend. If no notification of intent to attend the hearing is received by that date, the hearing may be cancelled. This hearing is open to the public. Any person who wishes to be heard will be given an opportunity to comment on the proposed administrative regulation. A transcript of the public hearing will not be made unless a written request for a transcript is made. If you do not wish to be heard at the public hearing, you may submit written comments on the proposed administrative regulation. Written comments shall be accepted until at the close of business on November 30, 2011. Send written notification of intent to be heard at the public hearing or written comments on the proposed administrative regulation to the contact person.

CONTACT PERSON: Karen Lockett, Board Administrator,

Kentucky Board of Interpreters for the Deaf and Hard of Hearing, PO Box 1370, Frankfort, Kentucky 40602 phone (502) 564-3296 ex. 222, fax (502) 696-1923.

REGULATORY IMPACT ANALYSIS AND TIERING STATEMENT

Contact Person: Michael West

(1) Provide a brief summary of

(a) What this administrative regulation does: This regulation sets requirements for obtaining a license to interpret through reciprocity.

(b) The necessity of this administrative regulation: This regulation sets requirements for obtaining a license to interpret through reciprocity.

(c) How this administrative regulation conforms to the content of the authorizing statutes: The regulation is in conformity as the authorizing statute gives the board the ability to promulgate regulations generally.

(d) How this administrative regulation currently assists or will assist in the effective administration of the statutes: This regulation sets requirements for obtaining a license to interpret through reciprocity.

(2) If this is an amendment to an existing administrative regulation, provide a brief summary of:

(a) How the amendment will change this existing administrative regulation: This amendment clarifies existing procedures and requirements.

(b) The necessity of the amendment to this administrative regulation: This amendment clarifies existing procedures and requirements.

(c) How the amendment conforms to the content of the authorizing statutes: The regulation is in conformity as the authorizing statute gives the board the ability to promulgate regulations generally related to the practice of interpreting.

(d) How the amendment will assist in the effective administration of the statutes: This amendment clarifies existing procedures and requirements.

(3) List the type and number of individuals, businesses, organizations, or state and local governments affected by this administrative regulation: There are approximately 300 full and temporarily licensed interpreters. This regulation only impacts those applying for initial temporary licensure.

(4) Provide an analysis of how the entities identified in question (3) will be impacted by either the implementation of this administrative regulation, if new, or by the change, if it is an amendment, including:

(a) List the actions that each of the regulated entities identified in question (3) will have to take to comply with this administrative regulation or amendment: Prospective licensees will need to meet the requirements for licensure.

(b) In complying with this administrative regulation or amendment, how much will it cost each of the entities identified in question (3): The fees as promulgated in 201 KAR 39:040 and any costs associated with testing as required. These costs have not changed as a result of this amendment.

(c) As a result of compliance, what benefits will accrue to the entities identified in question (3): They will have the opportunity to obtain licensure by reciprocity if they meet the stated requirements.

(5) Provide an estimate of how much it will cost to implement this administrative regulation:

(a) Initially: No new costs will be incurred by the changes.

(b) On a continuing basis: No new costs will be incurred by the changes.

(6) What is the source of the funding to be used for the implementation and enforcement of this administrative regulation: The board's operations are funded by fees paid by licensees.

(7) Provide an assessment of whether an increase in fees or funding will be necessary to implement this administrative regulation, if new, or by the change if it is an amendment: No fees will be required to implement this administrative regulation amendment.

(8) State whether or not this administrative regulation establishes any fees or directly or indirectly increases any fees: This regulation established but does not change fees from their current level.

(9) TIERING: Is tiering applied? Tiering is not applied to this regulation.

FISCAL NOTE ON STATE OR LOCAL GOVERNMENT

1. Does this administrative regulation relate to any program, service, or requirements of a state or local government (including cities, counties, fire departments, or school districts)? Yes

2. What units, parts or divisions of state or local government (including cities, counties, fire departments, or school districts) will be impacted by this administrative regulation? Kentucky Board of Interpreters for the Deaf and Hard of Hearing

3. Identify each state or federal statute or federal regulation that requires or authorizes the action taken by the administrative regulation: KRS 309.304(3)

4. Estimate the effect of this administrative regulation on the expenditures and revenues of a state or local government agency (including cities, counties, fire departments, or school districts) for the first full year the administrative regulation is to be in effect. None

(a) How much revenue will this administrative regulation generate for the state or local government (including cities, counties, fire departments, or school districts) for the first year? None

(b) How much revenue will this administrative regulation generate for the state or local government (including cities, counties, fire departments, or school districts) for subsequent years? None

(c) How much will it cost to administer this program for the first year? None

(d) How much will it cost to administer this program for subsequent years? None

Note: If specific dollar estimates cannot be determined, provide a brief narrative to explain the fiscal impact of the administrative regulation.

Revenues (+/-):

Expenditures (+/-):

Other Explanation:

GENERAL GOVERNMENT CABINET
Board of Interpreters for the Deaf and Hard of Hearing
(Amendment)

201 KAR 39:090. Continuing education requirements.

RELATES TO: KRS 309.304(5)

STATUTORY AUTHORITY: KRS 309.304(3), 309.314(7)

NECESSITY, FUNCTION, AND CONFORMITY: KRS 309.314(7) authorizes the board to promulgate an administrative regulation that requires interpreters who apply for renewal or reinstatement to show evidence of completion of continuing education. This administrative regulation delineates the requirements for continuing education and prescribes methods and standards for the accreditation of continuing education courses.

Section 1.[~~Definition. "One (1) continuing education hour" means sixty (60) contact minutes of participating in continuing education experiences.~~

~~Section 2.~~] Accrual of Continuing Education Hours Mandatory for Full Licensure; Computation of Accrual. (1) A person who is licensed as an interpreter shall have earned a total of fifteen (15) hours of approved continuing education during the compliance period, prior to renewal of his or her license for the next licensure period.

(2) A minimum of half of the fifteen (15) hours shall be from any of the following sources, alone or in combination[~~, which have been preapproved by the board~~]:

(a) Alexander Graham Bell Association of the Deaf;

(b) American Sign Language Teacher Association;

(c) National Association of the Deaf;

(d) National Educational Interpreters Conference;

(e) Registry of Interpreters for the Deaf - Certificate Maintenance Program; or

(f) Registry of Interpreters for the Deaf - Associate Continuing Education Training.

(3) A minimum of fifteen (15) continuing education hours shall be accrued by each licensee during the licensure period for renewal for the following year.

(4) A minimum of three (3) total continuing education hours shall be related to ethics.

Section 2[~~3~~]. Accrual of Continuing Education Hours Mandatory for Temporary Licensure; Computation of Accrual. (1) A person who holds a temporary license as an interpreter shall have earned a total of eighteen (18) hours of approved continuing education during the compliance period, prior to renewal or extension of his or her license for the next licensure period.

(2) A minimum of seven and one-half (7.5) of the eighteen (18) hours shall be from any of the following sources, alone or in combination[~~, which have been preapproved by the board~~];

(a) Alexander Graham Bell Association for the Deaf;

(b) American Sign Language Teacher Association;

(c) National Association of the Deaf;

(d) National Educational Interpreters Conference;

(e) Registry of Interpreters for the Deaf - Certificated Maintenance Program; or

(f) Registry of Interpreters for the Deaf - Associate Continuing Education Training.

(3) A minimum of three (3) total continuing hours shall be related to ethics.

Section 3[4]. Methods of Acquiring Continuing Education Hours. Continuing education hours applicable to the renewal of the license shall be directly related to the professional growth and development of an interpreter. The hours shall be earned by completing any of the following educational activities:

(1) Programs not requiring board review and approval. An educational program from any of the following providers shall be deemed to be relevant to the practice of interpreting and shall be approved without further review by the board:

(a) A program sponsored or approved by the:

1. Alexander Graham Bell Association of the Deaf;

2. American Sign Language Teacher Association;

3. National Association of the Deaf; or

4. Registry of Interpreters for the Deaf; or

(b) An academic course offered by an accredited postsecondary institution that is directly related to interpreting. Credit shall only be granted for grades of "C" or above.

(2) Programs requiring board review and approval. A program from any of the following sources shall be reviewed and determined if the program is relevant and therefore subsequently approved by the board:

(a) Relevant programs, including home study courses and in-service training provided by other organizations, educational institutions, or other service providers approved by the board;

(b) Relevant programs or academic courses presented by the licensee. Presenters of relevant programs or academic courses may earn full continuing education credit for each contact hour of instruction, not to exceed three (3) hours of continuing education credits. Credit shall not be issued for repeated presentation of the same course.

(c) Authoring an article in a relevant, professionally-recognized, or juried publication. Credit shall not be granted for an article unless the article was published within the one (1) year period immediately preceding the renewal date. A licensee shall earn three (3) hours of continuing education credit toward the hours required for renewal. No more than one (1) publication shall be counted during a renewal period.

(d) A general education course, elective course, or a course designed to meet degree requirements offered by an accredited postsecondary institution. Academic credit equivalency for continuing education hours shall be based on one (1) credit hour equals 10 continuing education hours [~~one (1) continuing education hour~~]. Credit shall only be granted for grades of "C" or above.

Section 4[~~5~~]. Procedures for Preapproval of Continuing Education Sponsors and Programs. (1) Any entity seeking to obtain approval of a continuing education program prior to its offering shall complete and submit the "Application for Continuing Education Program Approval" form to the board at least sixty (60) days in advance of the commencement of the program, stating the following:

(a) A published course or similar description containing educational objectives;

(b) Names and qualifications of the instructors;

(c) A copy of the program agenda indicating hours of instruction, coffee and lunch breaks; and

(d) Number of continuing education hours offered;[~~and~~

~~(e) Official certificate of completion or college transcript from the sponsoring agency or college.~~]

(2) A continuing education activity shall be qualified for approval if the board determines the activity being offered:

(a) Is an organized program of learning;

(b) Pertains to subject matters, which integrally relate to the practice of interpreting;

(c) Contributes to the professional competency of the licensee; and

(d) Is conducted by individuals who have educational training or experience acceptable to the board.

(3) A sponsor of continuing education requiring board approval shall be responsible for submitting a course offering to the board for review and approval before listing or advertising that offering as approved by the board.

Section 5[~~6~~]. Responsibilities and Reporting Requirements of Licensees. A licensee shall be responsible for obtaining the required continuing education hours. He shall identify his own continuing education needs, take the initiative in seeking continuing education activities to meet these needs, and seek ways to integrate new knowledge, skills and attitudes. Each person holding a license shall:

(1) Select approved activities by which to earn continuing education hours;

(2) Submit to the board when applicable a request for approval for continuing education activities not approved by the board as set forth in Section 7 of this administrative regulation;

(3) Maintain records of continuing education hours. Each licensee shall maintain all documentation verifying successful completion of continuing education hours for a period of two (2) years from the date of renewal. During each licensure renewal period, up to fifteen (15) percent of all licensees, chosen at random, shall be required by the board to furnish documentation of the completion of the appropriate number of continuing education hours for the current renewal period. Verification of continuing education hours shall not be otherwise reported to the board;

(4) Document attendance and participation in a continuing education activity in the form of official documents including transcripts, certificates, affidavits signed by instructors, receipts for fees paid to the sponsor, or less formal evidence including written summaries of experience that are not otherwise formally or officially documented in any way. The type of documentation required shall vary depending on the specific activity submitted to the board for approval; and

(5) Fully comply with the provisions of this administrative regulation. Failure to comply shall constitute a violation of KRS 309.318(1)(e) and may result in the refusal to renew, suspension, or revocation of the licensure.

Section 6[~~7~~]. Procedures for Approval of Continuing Education Programs. A course, which has not been preapproved by the board, may be used for continuing education if approval is secured from the board for the course. In order for the board to adequately review a program, the following information shall be submitted:

(1) A published course or similar description containing educational objectives; and

(2) Names and qualifications of the instructors.

Section 7[~~8~~]. Carry Over of Continuing Education Hours. A licensee may carry over continuing education hours earned in excess of those required under Section 1[~~2~~] of this administrative regulation for one (1) renewal period, after which time they expire. All carry-over hours shall comply with the requirements of Sections 1[~~2~~] through 3[4] of this administrative regulation.

Section 8[~~9~~]. Board to Approve Continuing Education Hours; Appeal when Approval Denied. In the event of a denial, in whole or in part, of any application for approval of continuing education hours, the licensee shall have the right to request reconsideration by the board of its decision. The request shall be in writing, specifically stating the reasons for reconsideration, and shall be received by the board within thirty (30) days of the board's decision denying approval of continuing education hours.

Section 9[~~10~~]. Waiver or Extensions of Continuing Education. All requests for waiver or extension shall accompany the "License Renewal Application Form".

(1) Upon written request, the board shall consider whether to grant a waiver of continuing education requirements or an extension of time within which to fulfill the requirements, in the following cases:

(a) Medical disability of the licensee;

(b) Illness of the licensee or an immediate family member;

(c) Death or serious injury of an immediate family member; or

(d) For good cause shown.

(2) A written request for a waiver or extension of time involving medical disability or illness shall be:

(a) Submitted by the person holding a license; and

(b) Accompanied by a verifying document signed by a licensed physician.

(3) A request for a waiver or extension of the continuing education requirements applies only to the current licensure year.

(a) Subsequent requests for waiver or extension of the continuing education requirements shall be made at the time of licensure renewal.

(b) There shall be no limit to the number of waivers or extensions that the board may grant, as long as the applicant meets the requirements set forth in subsections (1) and (2) of this section.

Section 10[~~11~~]. Continuing Education Requirements for Reinstatement of License. (1) A person requesting reinstatement of licensure shall submit evidence of completion of required hours of continuing education within the twelve (12) month period immediately preceding the date on which the request for reinstatement is submitted to the board.

(2) If the person seeking reinstatement does not meet the requirements established in subsection (1) of this section, the board may conditionally reinstate licensure, requiring the applicant to obtain required hours of continuing education within six (6) months of the date on which licensure is reinstated.

(3) The continuing education hours received in compliance with this section for reinstatement shall be in addition to the regular continuing education requirements established in Section 1 of this administrative regulation and shall not be used to comply with the requirements of that section.

Section 11[~~12~~]. Incorporation by Reference. (1) "Application for Continuing Education Program Approval[~~Application~~]", 2011[~~2001~~] form is incorporated by reference.

(2) This material may be inspected, copied, or obtained, subject to applicable copyright law, at the Division of Occupations and Professions, 911 Leawood Drive, Frankfort, Kentucky 40601, Monday through Friday, 8 a.m. to 4:30 p.m.

ARTIE GRASSMAN, Board Chair

APPROVED BY AGENCY: October 12, 2011

FILED WITH LRC: October 14, 2011 at noon

PUBLIC HEARING AND PUBLIC COMMENT PERIOD: A public hearing on this administrative regulation shall be held on November 21, 2011 at 11:00am (EST) at 911 Leawood Drive, Frankfort, Kentucky 40601. Individuals interested in being heard at this hearing shall notify this agency in writing five days prior to the hearing, of their intent to attend. If no notification of intent to attend the hearing is received by that date, the hearing may be cancelled. This hearing is open to the public. Any person who wishes to be heard will be given an opportunity to comment on the proposed administrative regulation. A transcript of the public hearing will not be made unless a written request for a transcript is made.
If you do not wish to be heard at the public hearing, you may submit written comments on the proposed administrative regulation. Written comments shall be accepted until at the close of business on November 30, 2011. Send written notification of intent to be heard at the public hearing or written comments on the proposed administrative regulation to the contact person.

CONTACT PERSON: Karen Lockett, Board Administrator, Kentucky Board of Interpreters for the Deaf and Hard of Hearing, PO Box 1370, Frankfort, Kentucky 40602, phone (502) 564-3296 ex. 222, fax (502) 696-1923.

REGULATORY IMPACT ANALYSIS AND TIERING STATEMENT

Contact Person: Michael West

(1) Provide a brief summary of

(a) What this administrative regulation does: This regulation sets requirements for approval of continuing education courses and sets licensee requirements for acceptable continuing education.

(b) The necessity of this administrative regulation: This regulation sets requirements for approval of continuing education courses and sets licensee requirements for acceptable continuing education.

(c) How this administrative regulation conforms to the content of the authorizing statutes: The regulation is in conformity as the authorizing statute gives the board the ability to promulgate regulations generally.

(d) How this administrative regulation currently assists or will assist in the effective administration of the statutes: This regulation sets requirements for approval of continuing education courses and sets licensee requirements for acceptable continuing education.

(2) If this is an amendment to an existing administrative regulation, provide a brief summary of:

(a) How the amendment will change this existing administrative regulation: This amendment clarifies existing procedures and requirements.

(b) The necessity of the amendment to this administrative regulation: This amendment clarifies existing procedures and requirements.

(c) How the amendment conforms to the content of the authorizing statutes: The regulation is in conformity as the authorizing statute gives the board the ability to promulgate regulations generally related to the practice of interpreting.

(d) How the amendment will assist in the effective administration of the statutes: This amendment clarifies existing procedures and requirements.

(3) List the type and number of individuals, businesses, organizations, or state and local governments affected by this administrative regulation: There are approximately 300 full and temporarily licensed interpreters. This regulation only impacts those applying for initial temporary licensure.

(4) Provide an analysis of how the entities identified in question (3) will be impacted by either the implementation of this administrative regulation, if new, or by the change, if it is an amendment, including:

(a) List the actions that each of the regulated entities identified in question (3) will have to take to comply with this administrative regulation or amendment: Licensees will need to meet the requirements for renewal of licensure.

(b) In complying with this administrative regulation or amendment, how much will it cost each of the entities identified in question (3): The fees as promulgated in 201 KAR 39:040 and any costs associated with testing or education as required. These costs have not changed as a result of this amendment.

(c) As a result of compliance, what benefits will accrue to the entities identified in question (3): They will have the opportunity to renew their license if they meet the stated requirements.

(5) Provide an estimate of how much it will cost to implement this administrative regulation:

(a) Initially: No new costs will be incurred by the changes.

(b) On a continuing basis: No new costs will be incurred by the changes.

(6) What is the source of the funding to be used for the implementation and enforcement of this administrative regulation: The

board's operations are funded by fees paid by licensees.

(7) Provide an assessment of whether an increase in fees or funding will be necessary to implement this administrative regulation, if new, or by the change if it is an amendment: No fees will be required to implement this administrative regulation amendment.

(8) State whether or not this administrative regulation establishes any fees or directly or indirectly increases any fees: This regulation established but does not change fees from their current level.

(9) TIERING: Is tiering applied? Tiering is not applied to this regulation.

FISCAL NOTE ON STATE OR LOCAL GOVERNMENT

1. Does this administrative regulation relate to any program, service, or requirements of a state or local government (including cities, counties, fire departments, or school districts)? Yes

2. What units, parts or divisions of state or local government (including cities, counties, fire departments, or school districts) will be impacted by this administrative regulation? Kentucky Board of Interpreters for the Deaf and Hard of Hearing

3. Identify each state or federal statute or federal regulation that requires or authorizes the action taken by the administrative regulation: KRS 309.304(3)

4. Estimate the effect of this administrative regulation on the expenditures and revenues of a state or local government agency (including cities, counties, fire departments, or school districts) for the first full year the administrative regulation is to be in effect. None

(a) How much revenue will this administrative regulation generate for the state or local government (including cities, counties, fire departments, or school districts) for the first year? None

(b) How much revenue will this administrative regulation generate for the state or local government (including cities, counties, fire departments, or school districts) for subsequent years? None

(c) How much will it cost to administer this program for the first year? None

(d) How much will it cost to administer this program for subsequent years? None

Note: If specific dollar estimates cannot be determined, provide a brief narrative to explain the fiscal impact of the administrative regulation.

Revenues (+/-):

Expenditures (+/-):

Other Explanation:

GENERAL GOVERNMENT CABINET
Board of Interpreters for the Deaf and Hard of Hearing
(Amendment)

201 KAR 39:100. Complaint procedure.

RELATES TO: KRS 309.304(7), 309.316, 309.318

STATUTORY AUTHORITY: KRS 309.304(3), 309.316(2)

NECESSITY, FUNCTION, AND CONFORMITY: KRS 309.316(2) authorizes the board to establish procedures for receiving and investigating complaints. KRS 309.318 delineates the causes for which disciplinary action may be taken against a licensee. This administrative regulation establishes procedures for the filing, evaluation, and disposition of administrative complaints.

Section 1. [~~Definitions. (1) "Case manager" means a member of the board appointed by the chair of the board to review complaints, investigative reports, and to participate in informal proceedings to resolve a formal complaint.~~

~~(2) "Chair" means the chair or vice-chair of the board.~~

~~(3) "Charge" means a specific allegation contained in a formal complaint, as established in subsection (5) of this section, issued by the board alleging a violation of a specified provision of KRS 309.300 to 309.319, the administrative regulations promulgated thereunder, or any other state or federal statute or regulation.~~

~~(4) "Complaint" means any written or videotaped allegation of misconduct by a licensed individual that might constitute a violation of KRS 309.300 to 309.319, the administrative regulations promulgated thereunder, or any state or federal statute regulating the practice of interpreting.~~

~~(5) "Complaint screening committee" means a committee consisting of three (3) persons on the board appointed by the chairman of the board to review complaints, investigative reports, and to participate in informal proceedings to resolve a formal complaint made up of board members, the executive director of the board, or another staff member.~~

~~(6) "Formal complaint" means a formal administrative pleading authorized by the board which sets forth charges against a licensed individual or other person and commences a formal disciplinary proceeding pursuant to KRS Chapter 13B or requests the court to take criminal or civil action.~~

~~(7) "Informal proceedings" means the proceedings instituted at any stage of the disciplinary process with the intent of reaching a dispensation of any matter without further recourse to formal disciplinary procedures under KRS Chapter 13B.~~

~~(8) "Investigator" means an individual designated by the board to assist the board in the investigation of a complaint or an investigator employed by the Attorney General or the board.~~]

Section 2. Receipt of Complaints. (1) A complaint:

(a) May be submitted by an:

1. Individual;

2. Organization; or

3. Entity.

(b) Shall be:

1. In writing or contained on a videotape or digital media; and

2. Include [~~Contain~~] the signature or stated name, address, and telephone or videophone number of the person submitting the complaint; and

(c) May be filed by the board or board member based upon information in its possession.

(2) [~~A videotaped complaint shall be accompanied by a form provided by the board.~~

~~(3)~~] Upon receipt of the complaint a copy of the complaint shall be sent to the licensee named in the complaint along with a request for the licensee's response to the complaint. The individual shall be allowed a period of twenty (20) days from the date of receipt to submit a written, videotaped or other digital media response.

Section 3. Initial Review. (1) After the receipt of a complaint and the expiration of the period for the licensee's response, the case manager or the complaint screening committee shall consider the complaint, the licensee's response, and any other relevant material available and make a recommendation to the board. The board shall determine whether there is enough evidence to warrant a formal investigation of the complaint.

(2) If the board determines before formal investigation that a complaint is without merit, it shall:

(a) Dismiss the complaint; and

(b) Notify the complainant and licensee of the board's decision.

(3) If the board determines that a complaint warrants a formal investigation, it shall:

(a) Authorize an investigation into the matter; and

(b) Order a report to be made to the case manager or the complaint screening committee at the earliest opportunity.

Section 4. Results of Formal Investigation; Board Decision on Hearing. (1) Upon completion of the formal investigation, the investigator shall submit a written report to the case manager or the complaint screening committee of the facts regarding the complaint. The case manager or the complaint screening committee shall review the investigative report and make a recommendation to the board. The board shall determine whether there has been a prima facie violation of KRS 309.300 to 309.319 or the administrative regulations promulgated thereunder and if a formal complaint should be filed.

(2) If the board determines that a complaint does not warrant issuance of a formal complaint, it shall:

(a) Dismiss the complaint; and

(b) Notify the complainant and respondent of the board's deci-

sion.

(3) If the board determines that a violation has occurred but is not serious, the board may issue a written admonishment to the licensee in accordance with KRS 309.316(4).

(4) If the board determines that a complaint warrants the issuance of a formal complaint against a respondent, the board attorney in conjunction with the case manager or the complaint screening committee shall prepare a formal complaint which states clearly the charge or charges to be considered at the hearing. The formal complaint shall be reviewed by the board and, if approved, signed by the chairman and served upon the individual as required by KRS Chapter 13B.

(5) If the board determines that a person may be in violation of KRS 309.301(1), it shall:

(a) Order the individual to cease and desist from further violations of KRS 309.301(1);

(b) Forward information to the county attorney of the county of residence of the person allegedly violating KRS 309.301(1) with a request that appropriate action be taken under KRS 309.319; or

(c) Initiate action in Franklin Circuit Court for injunctive relief to stop the violation of KRS 309.301(1) pursuant to KRS 309.304(7).

Section 5. Settlement by Informal Proceedings. (1) The board through counsel and the case manager or the complaint screening committee may, at any time during this process, enter into informal proceedings with the individual who is the subject of the complaint for the purpose of appropriately dispensing with the matter.

(2) An agreed order or settlement reached through this process shall be approved by the board and signed by the individual who is the subject of the complaint and the chairman.

(3) The board may employ mediation as a method of resolving the matter informally.

Section 6. Notice and Service of Process. A notice required by KRS 309.300 to 309.319 or this administrative regulation shall be issued pursuant to KRS Chapter 13B.

Section 7. Notification. The board shall make public:

(1) Its final order in a disciplinary action under KRS 309.316(3) [~~with the exception of a written admonishment issued pursuant to Section 4(3) of this administrative regulation~~]; and

(2) An action to restrain or enjoin a violation of KRS 309.301(1).

Section 8. Incorporation by Reference. (1) "Complaint Form," 2011[~~2001~~] is incorporated by reference.

(2) This material may be inspected, copied, or obtained, subject to applicable copyright law, at the Division of Occupations and Professions, 911 Leawood Drive, Frankfort, Kentucky 40601, Monday through Friday, 8 a.m. to 4:30 p.m.

ARTIE GRASSMAN, Board Chair

APPROVED BY AGENCY: October 12, 2011

FILED WITH LRC: October 14, 2011 at noon

PUBLIC HEARING AND PUBLIC COMMENT PERIOD: A public hearing on this administrative regulation shall be held on November 21, 2011 at 11:00am (EST) at 911 Leawood Drive, Frankfort, Kentucky 40601. Individuals interested in being heard at this hearing shall notify this agency in writing five days prior to the hearing, of their intent to attend. If no notification of intent to attend the hearing is received by that date, the hearing may be cancelled. This hearing is open to the public. Any person who wishes to be heard will be given an opportunity to comment on the proposed administrative regulation. A transcript of the public hearing will not be made unless a written request for a transcript is made. If you do not wish to be heard at the public hearing, you may submit written comments on the proposed administrative regulation. Written comments shall be accepted until at the close of business on November 30, 2011. Send written notification of intent to be heard at the public hearing or written comments on the proposed administrative regulation to the contact person.

CONTACT PERSON: Karen Lockett, Board Administrator, Kentucky Board of Interpreters for the Deaf and Hard of Hearing, PO Box 1370, Frankfort, Kentucky 40602, phone (502) 564-3296 ex. 222, fax (502) 696-1923.

REGULATORY IMPACT ANALYSIS AND TIERING STATEMENT

Contact Person: Michael West

(1) Provide a brief summary of

(a) What this administrative regulation does: This regulation creates the procedure for filing a disciplinary complaint with the Board and sets the disciplinary process utilized by the Board.

(b) The necessity of this administrative regulation: This regulation creates the procedure for filing a disciplinary complaint with the Board and sets the disciplinary process utilized by the Board.

(c) How this administrative regulation conforms to the content of the authorizing statutes: The regulation is in conformity as the authorizing statute gives the board the ability to promulgate regulations generally.

(d) How this administrative regulation currently assists or will assist in the effective administration of the statutes: This regulation creates the procedure for filing a disciplinary complaint with the Board and sets the disciplinary process utilized by the Board.

(2) If this is an amendment to an existing administrative regulation, provide a brief summary of:

(a) How the amendment will change this existing administrative regulation: This amendment clarifies existing procedures and requirements and increases transparency of Board actions.

(b) The necessity of the amendment to this administrative regulation: This amendment clarifies existing procedures and requirements and increases transparency of Board actions.

(c) How the amendment conforms to the content of the authorizing statutes: The regulation is in conformity as the authorizing statute gives the board the ability to promulgate regulations generally related to the practice of interpreting.

(d) How the amendment will assist in the effective administration of the statutes: This amendment clarifies existing procedures and requirements and increases transparency of Board actions.

(3) List the type and number of individuals, businesses, organizations, or state and local governments affected by this administrative regulation: There are approximately 300 full and temporarily licensed interpreters. This regulation only impacts those applying for initial temporary licensure.

(4) Provide an analysis of how the entities identified in question (3) will be impacted by either the implementation of this administrative regulation, if new, or by the change, if it is an amendment, including:

(a) List the actions that each of the regulated entities identified in question (3) will have to take to comply with this administrative regulation or amendment: Aggrieved parties or members of the public will submit complaints in the same way that those complaints have been submitted.

(b) In complying with this administrative regulation or amendment, how much will it cost each of the entities identified in question (3): None

(c) As a result of compliance, what benefits will accrue to the entities identified in question (3): The profession will be stronger through the discipline of bad actors.

(5) Provide an estimate of how much it will cost to implement this administrative regulation:

(a) Initially: No new costs will be incurred by the changes.

(b) On a continuing basis: No new costs will be incurred by the changes.

(6) What is the source of the funding to be used for the implementation and enforcement of this administrative regulation: The board's operations are funded by fees paid by licensees.

(7) Provide an assessment of whether an increase in fees or funding will be necessary to implement this administrative regulation, if new, or by the change if it is an amendment: No fees will be required to implement this administrative regulation amendment.

(8) State whether or not this administrative regulation establishes any fees or directly or indirectly increases any fees: This regulation established but does not change fees from their current level.

(9) TIERING: Is tiering applied? Tiering is not applied to this regulation.

FISCAL NOTE ON STATE OR LOCAL GOVERNMENT

1. Does this administrative regulation relate to any program, service, or requirements of a state or local government (including cities, counties, fire departments, or school districts)? Yes

2. What units, parts or divisions of state or local government (including cities, counties, fire departments, or school districts) will be impacted by this administrative regulation? Kentucky Board of Interpreters for the Deaf and Hard of Hearing

3. Identify each state or federal statute or federal regulation that requires or authorizes the action taken by the administrative regulation: KRS 309.304(3)

4. Estimate the effect of this administrative regulation on the expenditures and revenues of a state or local government agency (including cities, counties, fire departments, or school districts) for the first full year the administrative regulation is to be in effect. None

(a) How much revenue will this administrative regulation generate for the state or local government (including cities, counties, fire departments, or school districts) for the first year? None

(b) How much revenue will this administrative regulation generate for the state or local government (including cities, counties, fire departments, or school districts) for subsequent years? None

(c) How much will it cost to administer this program for the first year? None

(d) How much will it cost to administer this program for subsequent years? None

Note: If specific dollar estimates cannot be determined, provide a brief narrative to explain the fiscal impact of the administrative regulation.

Revenues (+/-):

Expenditures (+/-):

Other Explanation:

GENERAL GOVERNMENT CABINET
Board of Interpreters for the Deaf and Hard of Hearing
(Amendment)

201 KAR 39:120. Code of ethics.

RELATES TO: KRS 309.304(3), 309.318(1)(e), (f)

STATUTORY AUTHORITY: KRS 309.304(3), 309.318(1)(f)

NECESSITY, FUNCTION, AND CONFORMITY: KRS 309.318(1)(e) and (f) authorizes the board to take disciplinary action against a licensee who violates any state statute or administrative regulation governing the practice of interpreting or violates the code of ethics, known as the Professional Code of Conduct, of the licensees' national certifying organization(s) [~~of the national organization~~]. This administrative regulation establishes the code of ethics in accordance with KRS 309.318(1)(f).

Section 1. A license shall abide by the following standards of professional and ethical conduct:

(1) A licensee shall keep all assignment-related information strictly confidential. From the moment of accepting the assignment, the interpreter holds a trustworthy relationship with the consumer, in which the interpreter is bound to confidentiality.

(a) All information obtained from the interpreter service shall be considered confidential. This applies whether the interpreter accepts or declines the assignment.

(b) All information about a consumer that is received from other interpreters shall be considered confidential and shall be exchanged in a manner which protects both the consumer and the assignment.

(c) The interpreter shall comply with the requirements of KRS 620.030 by reporting to the proper authorities the dependency, neglect or abuse of a child if the interpreter reasonably believes that the dependency, neglect or abuse of a child is ongoing or has occurred.

(2) A licensee shall faithfully convey the content and spirit of the speaker using language most readily understood by the persons whom they serve. Every interpretation shall be faithful to the message of the source text. A faithful interpretation should not be confused with a literal interpretation. The fidelity of an interpretation includes an adaptation to make the form, the tone, and the deeper meaning of the source text felt in the target language and culture.

(3) A licensee shall possess the knowledge and skills to support accurate and appropriate interpretation. A licensee works in a variety of settings and with a wide range of consumers and therefore shall be adept at meeting the linguistic needs of consumers, the cultural dynamics of each situation, and the spirit and content of the discourse.

(4) A licensee shall not counsel, advise or interject personal opinions.

(a) An interpreter shall remain neutral, impartial, and objective. Should the interpreter find himself or herself unable to put aside personal biases or reactions which threaten impartiality, the interpreter is under an obligation to examine options and take actions to remedy the situation.

(b) An interpreter shall refrain from altering a message for political, religious, moral, or philosophical reasons, or for any other biased or subjective considerations.

(c) The interpreter shall advise the consumer that he or she assumes a position of neutrality in the relationship between all parties during an interpreting assignment. The interpreter shall not become personally involved in regards to the issues or persons present at the interpreting assignment.

(5) A licensee shall accept assignments using discretion with regard to skill, setting, and the consumers involved.

(a) An interpreter shall recognize the need for a deaf interpreter and advocate their participation as part of the interpreting team. A deaf interpreter may be necessary when working with individuals who use regional sign dialects, nonstandard signs, foreign sign languages, and those with emerging language use.

(b) An interpreter shall generally refrain from providing services in situations where family members, personal or business associations may affect impartiality. In an emergency situation, an interpreter may provide services for family members, friends or business associates. In those situations, the interpreter shall guard against allowing his personal involvement to affect his ability to interpret impartially. If the interpreter finds that he or she can no longer be impartial, the interpreter shall inform the parties involved and may assist in finding another interpreter.

(6) Prior to accepting an engagement for services, a licensee shall advise the party responsible for payment of the services to be provided of the amount of compensation to be charged for the services.

(7) A licensee shall not advertise his or her services in a false, deceptive or misleading manner.

(8) A licensee shall function in a manner appropriate to the situation. An interpreter shall attempt to become familiar with the anticipated discussion topic, type of activity, level of formality, expected behaviors, and possible presentational materials prior to commencement of the assignment.

(9) Each licensee shall strictly adhere to the parameters set forth by RID specific to the certification or certifications awarded which address appropriate conduct for a particular situation and setting.

Section 2. In addition to the standards delineated in Section 1, a licensee shall abide by the code of ethics or code of professional conduct for their respective certification(s).

ARTIE GRASSMAN, Board Chair

APPROVED BY AGENCY: October 12, 2011

FILED WITH LRC: October 14, 2011 at noon

PUBLIC HEARING AND PUBLIC COMMENT PERIOD: A public hearing on this administrative regulation shall be held on November 21, 2011 at 11:00am (EST) at 911 Leawood Drive, Frankfort, Kentucky 40601. Individuals interested in being heard at this hearing shall notify this agency in writing five days prior to the hearing, of their intent to attend. If no notification of intent to attend the hearing is received by that date, the hearing may be cancelled. This hearing is open to the public. Any person who wishes to be heard will be given an opportunity to comment on the proposed administrative regulation. A transcript of the public hearing will not be made unless a written request for a transcript is made. If you do

not wish to be heard at the public hearing, you may submit written comments on the proposed administrative regulation. Written comments shall be accepted until at the close of business on November 30, 2011. Send written notification of intent to be heard at the public hearing or written comments on the proposed administrative regulation to the contact person.

CONTACT PERSON: Karen Lockett, Board Administrator, Kentucky Board of Interpreters for the Deaf and Hard of Hearing, PO Box 1370, Frankfort, Kentucky 40602 phone (502) 564-3296 ex. 222, fax (502) 696-1923.

REGULATORY IMPACT ANALYSIS AND TIERING STATEMENT

Contact Person: Michael West

(1) Provide a brief summary of

(a) What this administrative regulation does: This regulation creates a code of conduct for interpreters.

(b) The necessity of this administrative regulation: This regulation creates a code of conduct for interpreters.

(c) How this administrative regulation conforms to the content of the authorizing statutes: The regulation is in conformity as the authorizing statute gives the board the ability to promulgate regulations generally.

(d) How this administrative regulation currently assists or will assist in the effective administration of the statutes: This regulation creates a code of conduct for interpreters.

(2) If this is an amendment to an existing administrative regulation, provide a brief summary of:

(a) How the amendment will change this existing administrative regulation: This amendment strengthens ethical standards by requiring licensees to meet the standards of their national certifying body in addition to those of the Board.

(b) The necessity of the amendment to this administrative regulation: This amendment strengthens ethical standards by requiring licensees to meet the standards of their national certifying body in addition to those of the Board.

(c) How the amendment conforms to the content of the authorizing statutes: The regulation is in conformity as the authorizing statute gives the board the ability to promulgate regulations generally related to the practice of interpreting.

(d) How the amendment will assist in the effective administration of the statutes: This amendment strengthens ethical standards by requiring licensees to meet the standards of their national certifying body in addition to those of the Board.

(3) List the type and number of individuals, businesses, organizations, or state and local governments affected by this administrative regulation: There are approximately 300 full and temporarily licensed interpreters. This regulation only impacts those applying for initial temporary licensure.

(4) Provide an analysis of how the entities identified in question (3) will be impacted by either the implementation of this administrative regulation, if new, or by the change, if it is an amendment, including:

(a) List the actions that each of the regulated entities identified in question (3) will have to take to comply with this administrative regulation or amendment: Licensees will need to meet the ethical standards of the national certifying bodies to which they belong.

(b) In complying with this administrative regulation or amendment, how much will it cost each of the entities identified in question (3): None

(c) As a result of compliance, what benefits will accrue to the entities identified in question (3): The profession will be stronger as licensees will be required to comply with additional ethical standards in some instances.

(5) Provide an estimate of how much it will cost to implement this administrative regulation:

(a) Initially: No new costs will be incurred by the changes.

(b) On a continuing basis: No new costs will be incurred by the changes.

(6) What is the source of the funding to be used for the implementation and enforcement of this administrative regulation: The board's operations are funded by fees paid by licensees.

(7) Provide an assessment of whether an increase in fees or funding will be necessary to implement this administrative regulation, if new, or by the change if it is an amendment: No fees will be required to implement this administrative regulation amendment.

(8) State whether or not this administrative regulation establishes any fees or directly or indirectly increases any fees: This regulation established but does not change fees from their current level.

(9) TIERING: Is tiering applied? Tiering is not applied to this regulation.

FISCAL NOTE ON STATE OR LOCAL GOVERNMENT

1. Does this administrative regulation relate to any program, service, or requirements of a state or local government (including cities, counties, fire departments, or school districts)? Yes

2. What units, parts or divisions of state or local government (including cities, counties, fire departments, or school districts) will be impacted by this administrative regulation? Kentucky Board of Interpreters for the Deaf and Hard of Hearing

3. Identify each state or federal statute or federal regulation that requires or authorizes the action taken by the administrative regulation: KRS 309.304(3)

4. Estimate the effect of this administrative regulation on the expenditures and revenues of a state or local government agency (including cities, counties, fire departments, or school districts) for the first full year the administrative regulation is to be in effect. None

(a) How much revenue will this administrative regulation generate for the state or local government (including cities, counties, fire departments, or school districts) for the first year? None

(b) How much revenue will this administrative regulation generate for the state or local government (including cities, counties, fire departments, or school districts) for subsequent years? None

(c) How much will it cost to administer this program for the first year? None

(d) How much will it cost to administer this program for subsequent years? None

Note: If specific dollar estimates cannot be determined, provide a brief narrative to explain the fiscal impact of the administrative regulation.

Revenues (+/-):

Expenditures (+/-):

Other Explanation:

TOURISM, ARTS AND HERITAGE CABINET
Department of Fish and Wildlife Resources
(Amendment)

301 KAR 2:082. Transportation and holding of exotic wildlife.

RELATES TO: KRS 150.010, 150.015, 150.305, 150.320, 150.330, 150.990

STATUTORY AUTHORITY: KRS, 150.025, 150.180, 150.280

NECESSITY, FUNCTION, AND CONFORMITY: KRS 150.025 authorizes the department to regulate the buying, selling, or transporting of wildlife. KRS 150.180 requires a person transporting live wildlife into Kentucky to obtain a permit from the department. KRS 150.280 authorizes the department to promulgate administrative regulations establishing procedures for the holding of protected wildlife. This administrative regulation establishes the procedure for obtaining a transportation permit for exotic wildlife, prohibits the importation and possession of exotic species with the potential to damage native ecosystems, and places restrictions on importing, transporting, and holding species that are potentially dangerous to human health and safety. [~~EO 2008-516, effective June 16, 2008, reorganizes and renames the Commerce Cabinet as the Tourism, Arts, and Heritage Cabinet.~~]

Section 1. Definitions. (1) "Exotic wildlife" means terrestrial wildlife species which have never naturally existed in the wild in Kentucky including introduced species that have become naturalized. [~~starling (Sturnus vulgaris), English or house sparrow (Passer domesticus), and Eurasian collared dove (Streptopelia decaoc-~~

~~to).~~]

(2)[~~"Circus" means a traveling public entertainment show consisting of acrobats, clowns, and trained animals.~~

(~~3~~)] "Permit" means an individual or annual transportation permit issued by the department.

Section 2. Exemptions. Transportation permits and captive wildlife permits shall not be required for the importation or possession of exotic wildlife and federally threatened or endangered species listed in this administrative regulation by facilities that are accredited by the American Zoo and Aquarium Association.

Section 3. Prohibited Species. (1) Except as specified in Section 2 of this administrative regulation and subsection (3) of this section, a person shall not import or transport through Kentucky or possess in Kentucky the following:

(a) Baya weaver (Ploceus philippinus);
(b) Blackbirds (Genus Agelaius), except native species;
(c) Cape sparrow (Passer melanurus);
(d) Cowbirds (Genus Molothrus), except native species;
(e) Cuckoo (Family Cuculidae), except native species;
(f) Dioch or red-billed quelea (Quelea quelea);
(g) European blackbird (Turdus merula);
(h) Fieldfare (Turdus pilaris);
(i) Flying fox or fruit bat (Genus Pteropus);
(j) Gambian giant pouched rat (Cricetomys gambianus);
(k) Giant, marine, or cane toad (Bufo marinus);
(l) Hawaiian rice bird or spotted munia (Lonchura punctulata);
(m) Jack rabbit (Genus Lepus);
(n) Java sparrow (Padda oryzivora);
(o) Madagascar weaver (Foudia madagascariensis);
(p) Mistle thrush (Turdus viscivorus);
(q) Monk or Quaker parakeet (Myiopsitta monachus);
(r) Multimammate rat (Subgenus Mastomys);
(s) Mute swan (Cygnus olor);
(t) Nutria (Myocastor coypus);
(u) Prairie dog (Cynomys spp.);
(v) Raccoon dog (Nyctereutes procyonoides);
(w) San Juan rabbit (Oryctolagus cuniculus);
(x) Sky lark (Alauda arvensis);
(y) Song thrush (Turdus philomelus);
(z) Starlings (Family Sturnidae) including pink starlings or rosy pastors (Sturnus roseus), except for Indian Hill mynahs (Gracula religiosa);
(aa) Suricate or slender-tailed meerkat (Genus Suricata);
(bb) Tongueless or African clawed frog (Xenopus laevis);
(cc) Weaver finches (Genus Passer), except Passer domesticus;
(dd) White eyes (Genus Zosterops);
(ee) Wild European rabbit (also called the San Juan Rabbit) not distinguishable morphologically from native wild rabbits;
(ff) Yellowhammer (Emberiza citrinella);
(gg) A member of the following families:
1. Suidae (pigs or hogs), except for domestic swine;
2. Viverridae (civits, genets, lingsangs, mongooses and fossas);
3. Tayassuidae (peccaries and javelinas).

(2) Prohibited inherently-dangerous wildlife. Except as specified in Section 2 of this administrative regulation and subsections (3), (5), and (6) of this section, a person shall not import or possess in Kentucky the following:

(a) Adders or vipers (Family Viperidae and Crotalidae) (except native species);
(b) Alligators or caimans (Family Alligatoridae);
(c) African buffalo (Syncerus caffer);
(d) Bears (Family Ursidae);
(e) Cheetah (Acinonyx jubatus);
(f) Clouded leopard (Neofelis nebulosa);
(g) Cobras mambas or coral snakes (Family Elapidae);
(h) Crocodiles (Family Crocodylidae);
(i) Elephants (Family Elephantidae);
(j) Gavials (Family Gavialidae);
(k) Gila monsters or beaded lizards (Family Helodermatidae);
(l) Hippopotamus (Hippopotamus amphibius);
(m) Honey badger or ratel (Mellivora capensis);
(n) Hyenas (Family Hyaenidae), all species except aardwolves (Proteles cristatus);
(o) Lions, jaguars, leopards or tigers (Genus Panthera);
(p) Old world badger (Meles meles);
(q) Primates nonhuman (Order Primates);
(r) Rhinoceroses (Family Rhinocerotidae);
(s) Sea snakes (Family Hydrophidae);
(t) Snow leopard (Uncia uncia);
(u) Venomous rear-fanged species (Family Colubridae) except hognose snakes (Genus Heterodon);
(v) Wolverine (Gulo gulo); or
(w) Hybrids of all species contained in this list.

(3) Upon written request, the commissioner may authorize the importation or possession of the species listed in this section by:

(a) A zoo or facility that is designated as the official zoo of a municipality;
(b) A government agency;
(c) A college or university;
(d) A licensed or accredited educational or research institution;
(e) A lawfully operated circus; or
(f) An exhibitor sponsored or contracted by a lawfully operated state or county fair [~~; or~~

~~(g) A person or organization requesting exemption for a service animal, as defined by the Americans with Disabilities Act~~].

(4) Wildlife possessed or imported into Kentucky per subsections (3) or (5) of this section shall be maintained within an enclosure sufficient[~~suffiecient~~] to prevent:

(a) Escape; and
(b) Direct contact with the public, except local governments may allow direct contact between the public and Asian elephants (Elephas maximus) if an established local ordinance exists that allows such contact.[~~public; and~~

~~(c) Bodily injury to the public.~~]

(5) A person may apply for a transportation permit to temporarily transport or possess a prohibited animal listed in this section if the animal is within the state for less than ninety-six (96) hours. Transportation permits shall not be issued for consecutive ninety-six (96) hour periods.

(6) Possession of an inherently-dangerous animal prior to the effective date of the amendment to this administrative regulation.

(a) A person who legally possessed in Kentucky an inherently-dangerous animal as defined in subsection (2) of this section prior to July 13, 2005 may continue to possess the animal and shall maintain:
1. Veterinary records;
2. Acquisition papers for the animal; or
3. Any other evidence that establishes that the person possessed the animal in Kentucky prior to July 13, 2005.

(b) A legally-possessed inherently-dangerous animal shall not be bred or replaced without an exemption as established in Sections 2 and 3(3) of this administrative regulation.

(7) If any inherently-dangerous animal escapes, either intentionally or unintentionally, the owner of the animal shall immediately contact local emergency services and the department at 800-252-3578 to report the escape or release.

Section 4. Exotic Wildlife. Unless listed in Section 3(1) of this administrative regulation, or otherwise protected by state or federal law, exotic wildlife shall not:

(1) Be classified as protected wildlife; and
(2) Require a permit from the department for possession.

Section 5. Transportation Permits and Certificate of Veterinary Inspection. (1) Prior to entry into Kentucky, an annual or individual transportation permit as established in 301 KAR 2:081 shall be obtained for all shipments of wildlife. A person shall be responsible for applying for a transportation permit before the person:

(a) Receives a shipment of wildlife;
(b) Imports wildlife for their own use or possession; or
(c) Transports wildlife into and through the state to a destination outside Kentucky;

(2) A copy of a valid transportation permit shall accompany all shipments of wildlife into Kentucky.

(a) An individual transportation permit shall be valid for one (1) shipment of wildlife and shall also permit possession of the wildlife for the designated time period.

(b) An annual transportation permit shall be valid for multiple wildlife shipments for one (1) year from the date of issue and shall also permit possession of the wildlife for the designated time period.

(c) An annual transportation permit holder shall:

1. Notify the department in writing of any changes or additions subsequent to the original application so that an amended permit may be issued prior to subsequent wildlife importation; and

2. Notify the wildlife division by telephone at 502-564-3400 or 800-858-1549 Monday through Friday between 8 a.m. and 4:30 p.m. at least forty-eight (48) hours prior to each shipment of wildlife of with:

a. The date of expected shipment;

b. The source of the shipment;

c. The species being shipped;

d. The number of individuals of each species; and

e. The period of time when the wildlife will be inside the state of Kentucky.

(3) All shipments of wildlife, except for fish, amphibians, and reptiles, shall be accompanied by a certificate of veterinary inspection stating that the wildlife is free from symptoms of disease. A federal quarantine certificate may be substituted for the certificate of veterinary inspection.

Section 6. The following animals shall not require permits from the department for importation:

(1) Alpaca (Vicugna pacos);

(2) American bison (Bison bison);

(3) Breeds and varieties of goats derived from the wild goat or bezoar (Capra aegagrus);

(4) Camels (Camelus bactrianus and Camelus dromedarius);

(5) Chinchillas (Chinchilla laniger);

(6) Cockatoos (family Cacatuidae);

(7) Domesticated races of ducks and geese (family Anatidae) distinguishable morphologically from wild ducks or geese;

(8) Domesticated races of the European rabbit (Oryctolagus cuniculus) distinguishable morphologically from wild rabbits;

(9) Domesticated races of mink (Mustela vison), if:

(a) Adults are heavier than 1.15 kilograms; or

(b) The fur color can be distinguished from wild mink;

(10) Domestic swine, except free-roaming or feral wild boars or wild swine;

(11) Domesticated races of rats (Rattus norvegicus or Rattus rattus) or mice (Mus musculus);

(12) Domesticated races of turkeys (Meleagris gallopavo) recognized by the American Poultry Association and the U.S. Department of Agriculture; but shall not include captive held or bred wild turkeys;

(13) Domestic yak (Bos grunniens);

(14) Gerbils (Meriones unguiculatus);

(15) Guinea fowl (Numida megeagris);

(16) Guinea pigs (Cavia porcellus);

(17) Hamsters (Mesocricetus spp.);

(18) Indian Hill mynahs (Gracula religiosa);

(19) Llama (Lama glama);

(20) Parrots, lovebirds, cockatiels, budgerigar, parakeets (except monk parakeet (M. monachus), macaws (family Psittacidae);

(21) Peafowl (Pavo cristatus);

(22) Pigeons (Columba domestica or Columba livia) or domesticated races of pigeons;

(23) Ratites, as defined by KRS 247.870; and

(24) Toucans (family Rhamphastidae).

Section 7. Applying for Permits. (1) An application for a permit shall be made on the appropriate form.

(2) The applicant shall indicate the source of supply of the wildlife.

(3) After the permit is issued, the permit holder shall retain a bill of sale or other written proof to show that the wildlife was obtained from a legal source.

(4) A permit holder shall show this written proof to a conservation officer upon request.

(5) An applicant shall possess an approved permit before transporting exotic wildlife into Kentucky.

(6) A permit application may be denied if the permit holder has been convicted of a violation of:

(a) Any provision in this administrative regulation; or

(b) Another federal or state wildlife law regarding the holding or transportation of exotic wildlife.

(7) Failure to provide accurate, truthful and complete information on the application form shall result in:

(a) Immediate withdrawal or revocation of the permit; and

(b) Confiscation of the wildlife imported under the permit.

(8) An applicant shall be responsible for knowing and following local ordinances and rules regarding the wildlife to be held in a locality.

Section 8. Endangered Species. A permit may be issued for the transportation or possession of federally endangered or threatened species if:

(1) It is not listed in Section 3 of this administrative regulation; and

(2) Proof of lawful possession and acquisition is provided.

Section 9. Inspections and Permit Revocation. (1) A person holding exotic wildlife shall allow a conservation officer to inspect the holding facilities at any reasonable time.

(2) Captive wildlife may be confiscated and the permit revoked if the permit holder violates any provision of this administrative regulation.

Section 10. Release. With the exception of pheasants and chukars, a person shall not release exotic wildlife into the wild.

Section 11. Incorporation by Reference. (1) The following material is incorporated by reference:

(a) "Annual Transportation Permit Application, June 2008 edition"; and

(b) "Individual Transportation Permit Application, June 2008 edition."

(2) This material may be inspected, copied, or obtained, subject to applicable copyright law, at the Kentucky Department of Fish and Wildlife Resources, #1 Sportsman's Lane, Frankfort, Kentucky, Monday through Friday, 8 a.m. to 4:30 p.m.

BENJY KINMAN, Deputy Commissioner

For DR. JONATHAN GASSETT, Commissioner

MARCHETA SPARROW, Secretary

APPROVED BY AGENCY: October 10, 2011

FILED WITH LRC: October 14, 2011 at 10 a.m.

PUBLIC HEARING AND PUBLIC COMMENT PERIOD: A public hearing on this administrative regulation shall be held on November 29, 2011, at 9 a.m. at the Department of Fish and Wildlife Resources in the Commission Room of the Arnold L. Mitchell Building, #1 Sportsman's Lane, Frankfort, Kentucky. Individuals interested in attending this hearing shall notify this agency in writing by five business days prior to the hearing of their intent to attend. If no notification of intent to attend the hearing is received by that date, the hearing may be canceled. This hearing is open to the public. Any person who attends will be given an opportunity to comment on the proposed administrative regulation. A transcript of the public hearing will not be made unless a written request for a transcript is made. If you do not wish to attend the public hearing, you may submit written comments on the proposed administrative regulation by November 30, 2011. Send written notification of intent to attend the public hearing or written comments on the proposed administrative regulation to:

CONTACT PERSON: Rose Mack, Department of Fish and Wildlife Resources, Arnold L. Mitchell Building, #1 Sportsman's Lane, Frankfort, Kentucky 40601, phone (502) 564-7109 ext. 4507, fax (502) 564-9136, email fwpubliccomments@ky.gov

REGULATORY IMPACT ANALYSIS AND TIERING STATEMENT

Contact Person: Rose Mack

(1) Provide a brief summary of:

(a) What this administrative regulation does: This administrative regulation establishes requirements on the possession and transportation of exotic wildlife.

(b) The necessity of this administrative regulation: This administrative regulation is necessary to control the indiscriminate possession and commercialization of wildlife, protect the public and native wildlife from wildlife-borne diseases, to prevent the introduction of wildlife that might be detrimental to native fauna and flora, and to reasonably accommodate public safety.

(c) How this administrative regulation conforms to the content of the authorizing statutes: KRS 150.025 authorizes the department to regulate the buying, selling, or transporting of wildlife. KRS 150.180 requires any person transporting live wildlife into Kentucky to obtain a permit from the department. KRS 150.280 authorizes the Department of Fish and Wildlife Resources to promulgate administrative regulations to establish the procedures for propagation and holding of protected wildlife.

(d) How this administrative regulation currently assists or will assist in the effective administration of the statutes: This administrative regulation will fulfill the purposes of KRS 150.025, 150.180, and 150.280 by defining the permits and procedures that are required for transportation and holding of exotic wildlife.

(2) If this is an amendment to an existing administrative regulation, provide a brief summary of:

(a) How the amendment will change this existing administrative regulation: This amendment will allow lawful exhibitors of Asian elephants an exception that allows direct contact between this species and the public only in localities that have an established local ordinance allowing such contact. In particular, this amendment will allow elephant rides by circus or state and county fair attendees if there is an established local government ordinance allowing such activity. This amendment also removes the exemption that authorizes persons to possess inherently dangerous wildlife service animals, in accordance with revisions to the American with Disabilities Act that defines service animals to only be dogs.

(b) The necessity of the amendment to this administrative regulation: This amendment is necessary to provide an exception for local governments who want to allow elephant rides at organized events such as circuses and state and county fairs, while reasonably accommodating public safety and welfare.

(c) How the amendment conforms to the content of the authorizing statutes: See (1)(c) above.

(d) How the amendment will assist in the effective administration of the statutes: See (1)(d) above.

(3) List the type and number of individuals, businesses, organizations, or state and local governments affected by this administrative regulation: All individuals who transport or possess species listed as prohibited exotic wildlife will be affected by this amendment. All individuals who transport or possess Asian elephants may be affected by this amendment. There were approximately 131 transportation permits issued to individuals during 2010; 15 permits included Asian elephants.

(4) Provide an analysis of how the entities identified in question (3) will be impacted by either the implementation of this administrative regulation, if new, or by the change, if it is an amendment, including:

(a) List the actions that each of the regulated entities identified in question (3) will have to take to comply with this administrative regulation or amendment: Individuals who import Asian elephants and intend to allow the public to have direct contact with the animals during special events shall be responsible for following local ordinances and rules regarding the wildlife to be held in a locality. If local government ordinance does not exist that allows direct contact between the public and Asian elephants, then direct contact shall not be allowed.

(b) In complying with this administrative regulation or amendment, how much will it cost each of the entities identified in question (3): There will be no additional cost to individuals who transport or possess exotic wildlife.

(c) As a result of compliance, what benefits will accrue to the entities identified in question (3): Lawful exhibitors of Asian elephants will benefit from this amendment by being able to offer activities such as elephant rides.

(5) Provide an estimate of how much it will cost the administrative body to implement this administrative regulation:

(a) Initially: This administrative regulation change will result in no initial change in cost to the Kentucky Department of Fish and Wildlife Resources to administer.

(b) On a continuing basis: There will be no additional cost on a continuing basis.

(6) What is the source of the funding to be used for the implementation and enforcement of this administrative regulation: The source of funding is the State Game and Fish Fund.

(7) Provide an assessment of whether an increase in fees or funding will be necessary to implement this administrative regulation, if new, or by the change if it is an amendment: It will not be necessary to increase any fees funding to implement this administrative regulation.

(8) State whether or not this administrative regulation established any fees or directly or indirectly increased any fees: No new fees will be established.

(9) TIERING: Is tiering applied? (Explain why or why not) Tiering was not applied because all individuals who transport or possess exotic wildlife are treated equally.

FISCAL NOTE ON STATE OR LOCAL GOVERNMENT

Contact Person: Rose Mack

1. Does this administrative regulation relate to any program, service, or requirements of a state or local government (including cities, counties, fire departments, or school districts)? Yes

2. What units, parts or divisions of state or local government (including cities, counties, fire departments, or school districts) will be impacted by this administrative regulation? The Department of Fish and Wildlife Resources Divisions of Wildlife and Law Enforcement and county and city commissions which establish ordinances allowing direct contact between the public and Asian elephants will be impacted by this administrative regulation.

3. Identify each state or federal statute or federal regulation that requires or authorizes the action taken by the administrative regulation. KRS 150.025 authorizes the department to regulate the buying, selling, or transporting of wildlife. KRS 150.180 requires a person transporting live wildlife into Kentucky to obtain a permit from the department. KRS 150.280 authorizes the department to promulgate administrative regulations establishing procedures for the holding of protected wildlife.

4. Estimate the effect of this administrative regulation on the expenditures and revenues of a state or local government agency (including cities, counties, fire departments, or school districts) for the first full year the administrative regulation is to be in effect.

(a) How much revenue will this administrative regulation generate for the state or local government (including cities, counties, fire departments, or school districts) for the first year? No revenue will be generated by this administrative regulation during the first year.

(b) How much revenue will this administrative regulation generate for the state or local government (including cities, counties, fire departments, or school districts) for subsequent years? No revenue will be generated by this administrative regulation during subsequent years.

(c) How much will it cost to administer this program for the first year? There will be no additional costs incurred for the first year.

(d) How much will it cost to administer this program for subsequent years? There will be no additional costs incurred in subsequent years.

Note: If specific dollar estimates cannot be determined, provide a brief narrative to explain the fiscal impact of the administrative regulation.

Revenues (+/-):

Expenditures (+/-):

Other Explanation:

TOURISM, ARTS AND HERITAGE CABINET
Kentucky Department of Fish and Wildlife Resources
(Amendment)

301 KAR 2:142. Spring wild turkey hunting.

RELATES TO: KRS 150.175(7)(8)(15)(17)(18), 150.305, 150.360, 150.990
STATUTORY AUTHORITY: KRS 150.025(1), 150.390(1)
KRS 150.025(1) authorizes the department to promulgate administrative regulations establishing hunting seasons, bag limits, and the methods of taking wildlife. KRS 150.390(1) authorizes the department to establish restrictions on hunting wild turkey. This administrative regulation establishes season dates, shooting hours, and other requirements for spring turkey hunting.

Section 1. Definitions. (1) "Wildlife Management Area" or "WMA" means a tract of land:
(a) Controlled by the department through ownership, lease, license, or cooperative agreement; and
(b) That has "Wildlife Management Area" or "WMA" as part of its official name.
(2) "Youth" means a person under the age of sixteen (16) by the day of the hunt.

Section 2. Youth Turkey Season. There shall be a statewide youth-only turkey hunting season for two (2) consecutive days beginning on the first Saturday in April.

Section 3. Statewide Turkey Season. There shall be a statewide turkey hunting season for twenty-three (23) consecutive days beginning on the Saturday closest to April 15.

Section 4. Turkey Hunting Requirements. (1) A person shall not take more than:
(a) One (1) male turkey per day;
(b) One (1) turkey with a visible beard per day;
(c) Two (2) male turkeys per season; or
(d) Two (2) turkeys with visible beards per season.
(2) A person shall not take a turkey using any device except the following equipment as authorized by 301 KAR 2:140, Section 5:
(a) A firearm;
(b) Archery equipment; or
(c) A crossbow.
(3) A person shall only hunt turkeys from one half (1/2) hour before sunrise until one-half (1/2) hour after sunset.
(4) A person who is assisting or calling a turkey for a legal hunter shall not be required to possess a hunting license or turkey permit.

Section 5. Wildlife Management Area Requirements. (1) Unless specified in this section, spring season dates and the requirements of 301 KAR 2:140 shall apply to Wildlife Management Areas.
(2) Barren River WMA. On the Peninsula Unit, including Narrows, Goose Island, and Grass Island, a person shall not use a breech-loading firearm to take a turkey.
(3) Higginson-Henry WMA. A person shall not use a firearm to take a turkey.
(4) Livingston County WMA. Statewide spring turkey season is open to youth only.
(5) Pioneer Weapons WMA. A person shall not use the following to take a turkey:
(a) A breech-loading firearm; or
(b) A scope or optical enhancement.
(6) Robinson Forest WMA. A person shall not hunt turkeys on the main block of the WMA.
(7) West Kentucky WMA. The area shall be open for the youth-only turkey season pursuant to Section 2 of this administrative regulation.

Section 6. Special Area Requirements. (1) Unless specified in this section, all the requirements of this administrative regulation shall apply.
(2) A person shall comply with all federal requirements when hunting on the following federal areas:
(a) Bluegrass Army Depot;
(b) Fort Campbell;
(c) Fort Knox;
(d) Land Between the Lakes; and
(e) Reelfoot National Wildlife Refuge.
(3) A spring turkey season, not to exceed twenty-three (23) days, shall be allowed between the last Saturday in March and the second Sunday in May on the following areas:
(a) Bluegrass Army Depot;
(b) Fort Campbell;
(c) Fort Knox;
(d) Land Between the Lakes;
(e) Reelfoot National Wildlife Refuge; and
(f) Wendell H. Ford Regional Training Center.
(4) A turkey taken on the following areas shall be considered a bonus bird:
(a) Bluegrass Army Depot;
(b) Fort Campbell; and
(c) Fort Knox.
(5) A person shall not take more than one (1) turkey on the following areas:
(a) Land Between the Lakes; and
(b) Reelfoot National Wildlife Refuge.
(6) Otter Creek Outdoor Recreation Area. All statewide season requirements shall apply, except that shooting hours shall be from one-half (1/2) hour before sunrise to noon each day. [~~RELATES TO: KRS 150.175(1)(r), 150.305, 150.360, 150.390, 150.990(11)~~
~~STATUTORY AUTHORITY: KRS 150.025(1), 150.390(1)~~
~~NECESSITY, FUNCTION, AND CONFORMITY: KRS 150.025(1) and 150.390(1) authorize the department to promulgate administrative regulations governing wild turkey hunting. This administrative regulation establishes season dates, shooting hours and other requirements for spring turkey hunting.~~

~~Section 1. Definition. "The youth turkey season" means a season that is open to a person who has not reached his 16th birthday by the day of the hunt.~~

~~Section 2. A person may take a wild turkey:~~
~~(1) For twenty-three (23) consecutive days beginning on the Saturday closest to April 15.~~
~~(2) Using firearms or archery equipment as specified in Section 5 of 301 KAR 2:140; and~~
~~(3) From one-half (1/2) hour before sunrise until one-half (1/2) hour after sunset.~~

~~Section 3. Youth Turkey Season. There shall be a two (2) day statewide youth turkey hunting weekend beginning the first Saturday in April.~~

~~Section 4. A person shall not take more than:~~
~~(1) One (1) male turkey or turkey with a visible beard per day; or~~
~~(2) Two (2) male turkeys or turkeys with visible beards during the spring season.~~

~~Section 5. (1) Unless otherwise specified in this section, spring season dates and the requirements of 301 KAR 2:140 shall apply to Wildlife Management Areas.~~
~~(2) A person shall not hunt a wild turkey during the spring on the areas listed in this section except on the dates specified in this administrative regulation.~~
~~(3) A turkey listed as a bonus bird shall not count against statewide limits.~~
~~(4) Barren River Wildlife Management Area. On the peninsula unit, including Narrows, Goose and Grass Islands, a person shall not:~~
~~(a) Hunt turkey with a breech-loading firearm; or~~
~~(b) Except as authorized by the department, carry a breech-loading firearm with ammunition in the chamber or magazine.~~
~~(5) Fort Campbell Wildlife Management Area.~~

~~(a) Season. The third Saturday in March through the second Sunday in May.~~

~~(b) A turkey taken on Fort Campbell shall be a bonus bird.~~

~~(c) A person shall:~~

~~1. Obtain a post combination hunting-fishing permit before hunting; and~~

~~2. Attach a Fort Campbell game check card to the turkey before leaving the post.~~

~~(6) Fort Knox Wildlife Management Area.~~

~~(a) Seasons. The last Saturday in March through the second Sunday in May.~~

~~(b) A person shall:~~

~~1. Hunt in assigned areas; and~~

~~2. Not take more than one (1) turkey during the spring season.~~

~~(c) A turkey taken on Fort Knox shall be a bonus bird.~~

~~(7) Higginson-Henry Wildlife Management Area. During the spring season a person shall not use or possess a firearm while turkey hunting.~~

~~(8) Land Between the Lakes.~~

~~(a) Seasons.~~

~~1. Quota hunts of no more than six (6) days beginning on or after the last Saturday in March.~~

~~2. Up to sixteen (16) days between the first Saturday in April and the second Saturday in May.~~

~~(b) A person shall:~~

~~1. Check in and out, as required by the USDA Forest Service;~~

~~2. Hunt in assigned areas;~~

~~3. Check turkeys at a Land Between the Lakes check station before leaving Land Between the Lakes, as required by the USDA Forest Service;~~

~~4. Affix a Land Between the Lakes game check card as required by the USDA Forest Service; and~~

~~5. Not take more than one (1) turkey in the spring.~~

~~(c) Shooting hours shall be from one-half (1/2) hour before sunrise until one-half (1/2) hour after sunset.~~

~~(9) Livingston County Wildlife Management Area. Open for the Youth Turkey Season. Statewide Spring Turkey Season open to youth only.~~

~~(10) Pioneer Weapons Wildlife Management Area. During the spring season a person shall not use a breech-loading shotgun.~~

~~(11) Reelfoot National Wildlife Refuge.~~

~~(a) Season. Quota hunt, three (3) consecutive days in April.~~

~~(b) A person shall:~~

~~1. Not take more than one (1) turkey; and~~

~~2. Obtain written permission from the area manager before hunting.~~

~~(12) The main block of Robinson Forest shall be closed to turkey hunting.~~

~~(13) West Kentucky Wildlife Management Area shall be open during the youth turkey season.~~

~~Section 6. A person may assist or call turkeys for another person who is legally hunting. This assistant:~~

~~(1) May possess a hunting license or turkey permit, but does not have to possess a hunting license if he is assisting a licensed hunter; and~~

~~(2) Shall not carry a firearm, archery equipment or crossbow if he has taken the bag limit for that season.~~]

BENJY KINMAN, Deputy Commissioner,
For DR. JONATHAN GASSETT, Commissioner
MARCHETA SPARROW, Secretary

APPROVED BY AGENCY: October 10, 2011

FILED WITH LRC: October 14, 2011 at 10 a.m.

PUBLIC HEARING AND PUBLIC COMMENT PERIOD: A public hearing on this administrative regulation shall be held on November 28, 2011, at 3 p.m. at the Department of Fish and Wildlife Resources in the Commission Room of the Arnold L. Mitchell Building, #1 Sportsman's Lane, Frankfort, Kentucky. Individuals interested in attending this hearing shall notify this agency in writing by five business days prior to the hearing of their intent to attend. If no notification of intent to attend the hearing is received by that date, the hearing may be canceled. This hearing is open to the public. Any person who attends will be given an opportunity to comment on the proposed administrative regulation. A transcript of the public hearing will not be made unless a written request for a transcript is made. If you do not wish to attend the public hearing, you may submit written comments on the proposed administrative regulation by November 30, 2011. Send written notification of intent to attend the public hearing or written comments on the proposed administrative regulation to:

CONTACT PERSON: Rose Mack, Department of Fish and Wildlife Resources, Arnold L. Mitchell Building, #1 Sportsman's Lane, Frankfort, Kentucky 40601, phone (502) 564-3400, fax (502) 564-9136, email fwpubliccomments@ky.gov.

REGULATORY IMPACT ANALYSIS AND TIERING STATEMENT

Contact Person: Rose Mack

(1) Provide a brief summary of:

(a) What this administrative regulation does: This regulation establishes spring wild turkey hunting seasons, bag limits, legal methods of take, and other turkey hunting requirements.

(b) The necessity of this administrative regulation: This regulation is necessary to provide adequate wild turkey hunting opportunity and to properly manage the wild turkey population in Kentucky.

(c) How this administrative regulation conforms to the content of the authorizing statutes: KRS 150.025(1) authorizes the department to promulgate administrative regulations establishing hunting seasons, bag limits, and the methods of taking wildlife. KRS 150.390(1) authorizes the department to establish restrictions on hunting wild turkey.

(d) How this administrative regulation currently assists or will assist in the effective administration of the statutes: This administrative regulation will fulfill the purposes of KRS 150.025 and 150.390 by defining the seasons, bag limits, and methods of take used to manage wild turkeys in Kentucky.

(2) If this is an amendment to an existing administrative regulation, provide a brief summary of:

(a) How the amendment will change this existing administrative regulation: This amendment will establish the daily hunting hours on Otter Creek Outdoor Recreation Area from one-half hour before sunrise to 12:00 p.m. during the 2-day youth-only and 23-day statewide spring turkey seasons. This amendment also removes the prohibition of hunters carrying certain types of weapons while hunting to conform to the requirements of SB 64 passed in 2010.

(b) The necessity of the amendment to this administrative regulation: This amendment is necessary to minimize potential user conflict between hunting and non-hunting outdoor enthusiasts. As Otter Creek Outdoor Recreation Area is open to multiple outdoor uses and activities, shooting hours for turkey hunters will cease at noon each day to allow for non-hunting use in the afternoon. It is also necessary to bring this regulation into compliance with previously passed legislation.

(c) How the amendment conforms to the content of the authorizing statutes: See (1)(c) above.

(d) How the amendment will assist in the effective administration of the statutes: See (1)(d) above.

(3) List the type and number of individuals, businesses, organizations, or state and local governments affected by this administrative regulation: April 2012 will mark the first spring turkey season on the Otter Creek Outdoor Recreation Area since operations were taken over by the Department. It is unknown how many turkey hunters will use the area during the spring season. There are approximately 85,000 resident and 5,500 non-resident turkey hunters in Kentucky.

(4) Provide an analysis of how the entities identified in question (3) will be impacted by either the implementation of this administrative regulation, if new, or by the change, if it is an amendment, including:

(a) List the actions that each of the regulated entities identified in question (3) will have to take to comply with this administrative regulation or amendment: Hunters wishing to pursue turkeys on the Otter Creek Outdoor Recreation Area must cease hunting at noon each day the area is open to hunting.

(b) In complying with this administrative regulation or amendment, how much will it cost each of the entities identified in question (3): All persons wishing to hunt on the Otter Creek Outdoor

Recreation Area must pay a three-dollar ($3.00) daily entry fee or procure a thirty-dollar ($30.00) annual entry permit.

(c) As a result of compliance, what benefits will accrue to the entities identified in question (3): Spring hunters wishing to pursue turkeys on this area will be able to do so when birds are most active in morning hours. In addition, the area closure to non-hunters until noon will alleviate the disturbance to hunters by hikers, bicyclists, and horseback riders. Likewise, non-hunting outdoor enthusiasts may use the area after 12:00 noon during the spring turkey season without hunting disturbance.

(5) Provide an estimate of how much it will cost the administrative body to implement this administrative regulation:

(a) Initially: There will be no additional cost to the department to implement this administrative regulation.

(b) On a continuing basis: There will be no additional cost to the department on a continuing basis.

(6) What is the source of the funding to be used for the implementation and enforcement of this administrative regulation: The source of funding is the State Game and Fish Fund.

(7) Provide an assessment of whether an increase in fees or funding will be necessary to implement this administrative regulation, if new, or by the change if it is an amendment: It will not be necessary to increase any other fees or to increase funding to implement this administrative regulation.

(8) State whether or not this administrative regulation established any fees or directly or indirectly increased any fees: This administrative regulation does not establish fees or directly or indirectly increase any fees.

(9) TIERING: Is tiering applied? Tiering is not applied because all wild turkey hunters in Kentucky must comply with the requirements of this administrative regulation.

FISCAL NOTE ON STATE OR LOCAL GOVERNMENT

Contact Person: Rose Mack

1. Does this administrative regulation relate to any program, service, or requirements of a state or local government (including cities, counties, fire departments, or school districts)? Yes

2. What units, parts or divisions of state or local government (including cities, counties, fire departments, or school districts) will be impacted by this administrative regulation? The Department of Fish and Wildlife Resources Divisions of Wildlife and Law Enforcement will be impacted by this administrative regulation.

3. Identify each state or federal statute or federal regulation that requires or authorizes the action taken by the administrative regulation. KRS 150.025(1) authorizes the department to promulgate administrative regulations to set seasons, establish bag or creel limits, to regulate the buying, selling, or transporting of fish and wildlife, and to make these requirements apply to a limited area. KRS 150.390(1) restricts the possession, taking, or pursuit of turkeys in any manner contrary to the provisions of Chapter 150 or its regulations.

4. Estimate the effect of this administrative regulation on the expenditures and revenues of a state or local government agency (including cities, counties, fire departments, or school districts) for the first full year the administrative regulation is to be in effect.

(a) How much revenue will this administrative regulation generate for the state or local government (including cities, counties, fire departments, or school districts) for the first year? A small amount of revenue may be generated if some hunters purchase the $3 daily use permit who otherwise would not have used Otter Creek Outdoor Recreation Area.

(b) How much revenue will this administrative regulation generate for the state or local government (including cities, counties, fire departments, or school districts) for subsequent years? See 4 (a).

(c) How much will it cost to administer this program for the first year? There will be no additional costs incurred for the first year.

(d) How much will it cost to administer this program for subsequent years? There will be no additional costs incurred in subsequent years.

Note: If specific dollar estimates cannot be determined, provide a brief narrative to explain the fiscal impact of the administrative regulation.

Revenues (+/-): See 4 (a) above.

Expenditures (+/-): None; see 4 (c) and (d) above.

Other Explanation:

TOURISM, ARTS AND HERITAGE CABINET
Kentucky Department of Fish and Wildlife Resources
(Amendment)

301 KAR 2:221. Waterfowl seasons and limits.

RELATES TO: KRS 150.010(40), 150.025(1), 150.305(1), 150.330, 150.340(1), (3), 150.990

STATUTORY AUTHORITY: KRS 150.025(1), 150.360, 150.600(1), 50 C.F.R. 20, 21

NECESSITY, FUNCTION, AND CONFORMITY: KRS 150.025(1) authorizes the department to promulgate administrative regulations to establish open seasons for the taking of wildlife and to regulate bag limits. KRS 150.360 authorizes the department to restrict methods of taking wildlife. KRS 150.600 authorizes the department to regulate the taking of waterfowl on public and private land. This administrative regulation establishes procedures for the taking of waterfowl within reasonable limits and within the frameworks established by 50 C.F.R. Parts 20 and 21.

Section 1. Definitions. (1) "Dark goose" means a Canada goose, white-fronted goose, or brant.

(2) "Light Goose" means a snow goose or Ross's goose.

(3) "Light Goose Conservation Order" is defined by 50 C.F.R. 21.60

(4) "Waterfowl" is defined in KRS 150.010(40).

Section 2. (1) Except as authorized by 301 KAR 2:222, 2:225, or 2:226, a person shall not hunt waterfowl except during the seasons established in this administrative regulation.

(2) Hunting zones, special hunt areas and reporting areas are established in 301 KAR 2:224.

Section 3. Season dates. (1) Duck, coot, and merganser:

(a) Beginning on Thanksgiving Day for four (4) consecutive days; and

(b) For fifty-six (56) consecutive days ending on the last Sunday in January of the following year.

(2) Canada goose:

(a) Eastern, Pennyrile, and Western Goose Zones, beginning on November 23 for seventy (70) consecutive days.

(b) Northeast Goose Zone;

1. Beginning on January 1 for 31 consecutive days. [~~the last Saturday in December for nine (9) consecutive days; and~~

~~2. January 19 through January 31.~~]

(3) White-fronted and brant geese, beginning on November 23 for seventy (70) consecutive days.

(4) Light goose:

(a) Beginning on November 23 for seventy (70) consecutive days; and

(b) Light Goose Conservation Order season:

1. Western Duck Zone: from February 1 through March 31, except:

a. The season shall be closed during the first full weekend [~~week~~] in February; and

b. Youth hunters may hunt during the first full weekend in February pursuant to 301 KAR 2:226.

2. Eastern Duck Zone from February 1 through March 31.

(5) A person shall not hunt a light or dark goose in:

(a) The areas of Laurel River Lake as posted by sign; or

(b) Cave Run Lake and the public land inside the boundary formed by Highways 801, 1274, 36, 211, US 60, and Highway 826.

Section 4. In the Ballard Reporting Area that is established in 301 KAR 2:224:

(1) A person hunting waterfowl shall:

(a) Hunt from a blind unless hunting in flooded, standing timber;

(b) Not hunt from or establish a blind:

1. Within 100 yards of another blind; or
2. Within fifty (50) yards of a property line; and
(c) Not possess more than one (1) shotgun while in a blind.
(2) The requirements of subsection (1) of this section shall not apply if the Light Goose Conservation Order, as established in 301 KAR 2:221, is the only waterfowl season open, excluding falconry seasons.

Section 5. Bag and Possession Limits. (1) Ducks: The daily limit shall be six (6), that shall not include more than:
(a) Four (4) mallards;
(b) Two (2) hen mallards;
(c) Three (3) wood ducks;
(d) One (1) black duck;
(e) Two (2) redheads;
(f) Two (2) pintails;
(g) Two (2) scaup;
(h) One (1) mottled duck; or
(i) One (1) canvasback.
(2) Coot: Daily limit fifteen (15).
(3) Merganser: Daily limit five (5), which shall not include more than two (2) hooded mergansers.
(4) Dark goose: Daily limit six (6), that shall not include more than:
(a) Two (2) Canada geese;
(b) Two (2) white-fronted geese; or
(c) Two (2) brants.
(5) Light goose: Daily limit twenty (20), except that there shall not be a limit during the Light Goose Conservation Order season.
(6) The possession limit shall be double the daily limit, except that there shall not be a light goose possession limit.

Section 6. Shooting Hours. A person shall not hunt waterfowl except from one-half (1/2) hour before sunrise until:
(1) 2 p.m. in the Northeast Goose Zone during a Canada goose season;
(2) Sunset in the remainder of the state, except as specified in 301 KAR 2:222; or
(3) One-half (1/2) hour after sunset if hunting light geese [~~goose~~] during the Light Goose Conservation Order season.

Section 7. Falconry Waterfowl Season and Limits. (1) Season dates:
(a) Light goose: November 5 through January 31;
(b) Light Goose Conservation Order season:
1. Western Duck Zone: from February 1 through March 31, except:
a. The season shall be closed during the first full weekend in February; and
b. Youth hunters may hunt during the first full weekend in February pursuant to 301 KAR 2:226.
2. Remainder of state: from February 1 through March 31; and
(c) Other waterfowl: November 5 through January 31.
(2) Daily limit: three (3) waterfowl, except that there shall not be a limit on light goose during the Light Goose Conservation Order season.
(3) Possession limit: six (6) waterfowl, except that there shall not be a possession limit on light goose during the Light Goose Conservation Order season.

Section 8. Permit for the Light Goose Conservation Order season. (1) A person hunting light goose during the Light Goose Conservation Order season shall first obtain a free permit by completing the online application process on the department's website at fw.ky.gov. [~~from the department by contacting the Ballard WMA office.~~]
(2) A person hunting light goose during the Light Goose Conservation Order season shall submit a Light Goose Conservation Order report to the department by April 10.

BENJY KINMAN, Deputy Commissioner,
For DR. JONATHAN GASSETT, Commissioner
MARCHETA SPARROW, Secretary
APPROVED BY AGENCY: August 19, 2011.
FILED WITH LRC: September 20, 2011 at 4 p.m.
PUBLIC HEARING AND PUBLIC COMMENT PERIOD: A public hearing on this administrative regulation shall be held on November 28, 2011, at 2 p.m. at the Department of Fish and Wildlife Resources in the Commission Room of the Arnold L. Mitchell Building, #1 Sportsman's Lane, Frankfort, Kentucky. Individuals interested in attending this hearing shall notify this agency in writing by five business days prior to the hearing of their intent to attend. If no notification of intent to attend the hearing is received by that date, the hearing may be canceled. This hearing is open to the public. Any person who attends will be given an opportunity to comment on the proposed administrative regulation. A transcript of the public hearing will not be made unless a written request for a transcript is made. If you do not wish to attend the public hearing, you may submit written comments on the proposed administrative regulation by November 30, 2011. Send written notification of intent to attend the public hearing or written comments on the proposed administrative regulation to:
CONTACT PERSON: Rose Mack, Department of Fish and Wildlife Resources, Arnold L. Mitchell Building, #1 Sportsman's Lane, Frankfort, Kentucky 40601, phone (502) 564-3400 fax (502) 564-9136.

REGULATORY IMPACT ANALYSIS AND TIERING STATEMENT

Contact Person: Rose Mack
(1) Provide a brief summary of:
(a) What the administrative regulation does: This administrative regulation establishes waterfowl seasons and bag limits within federal migratory bird hunting frameworks established in 50 C.F.R. Parts 20 and 21 according to the U.S. Fish and Wildlife Service (USFWS).
(b) The necessity of the administrative regulation: The necessity of this administrative regulation is to establish the 2011–12 waterfowl hunting seasons in accordance with the USFWS.
(c) How does this administrative regulation conform to the authorizing statute: KRS 150.025 authorizes the department to establish hunting season dates and bag limits. KRS 150.360 authorizes the department to restrict methods for the taking of wildlife. KRS 150.600 authorizes the department to regulate the taking of waterfowl on public and private land.
(d) How will this administrative regulation assist in the effective administration of the statutes: This administrative regulation manages waterfowl populations and hunting opportunity consistent with national and international management goals.
(2) If this is an amendment to an existing administrative regulation, provide a brief summary of:
(a) How the amendment will change the existing administrative regulation: This amendment will add 8 additional days in 2012 to the Canada goose season in the Northeast Goose Zone. Recent banding data indicates the population is stable to increasing and can now support increased harvest opportunity.
(b) The necessity of the amendment to this administrative regulation: Waterfowl seasons and limits are set on an annual basis following the establishment of federal frameworks by the U.S. Fish and Wildlife Service each summer. It is the Department's responsibility to allow quality hunting opportunity within these federal frameworks.
(c) How does the amendment conform to the authorizing statutes: See (1)(c) above.
(d) How the amendment will assist in the effective administration of the statutes: See (1)(d) above.
(3) List the type and number of individuals, businesses, organizations or state and local governments that will be affected: There are approximately 20,000 waterfowl hunters in Kentucky that may be affected by this administrative regulation.
(4) Provide an analysis of how the entities identified in question (3) will be impacted by either the implementation of this administrative regulation, if new, or by the change, if it is an amendment, including:
(a) List the actions that each of the regulated entities identified in question (3) will have to take to comply with this administrative regulation or amendment: The current changes in season dates and/or bag limits will be published in the fall waterfowl hunting

guide and on the department's website. Hunters will need to follow all applicable amendments to the hunting seasons.

(b) In complying with this administrative regulation or amendment, how much will it cost each of the entities identified in question (3): There will be no additional costs to those identified in question (3).

(c) As a result of compliance, what benefits will accrue to the entities identified in question (3): There will be an increased opportunity to hunt waterfowl in the state.

(5) Provide an estimate of how much it will cost to implement this administrative regulation:

(a) Initially: This administrative regulation change will result in no initial change in cost to the Kentucky Department of Fish and Wildlife Resources to administer.

(b) On a continuing basis: There will be no additional cost on a continuing basis.

(6) What is the source of funding to be used for implementation and enforcement of this administrative regulation? The source of funding is the State Game and Fish fund.

(7) Provide an assessment of whether an increase in fees or funding will be necessary to implement this administrative regulation, if new, or by the change if it is an amendment. It will not be necessary to increase any other fees or funding to implement this administrative regulation.

(8) State whether or not this administrative regulation establishes any fees directly or indirectly increases any fees: No new fees will be established.

(9) TIERING: Is tiering applied? Tiering was not applied. The same guidelines and limits apply to all waterfowl hunters.

FISCAL NOTE ON STATE OR LOCAL GOVERNMENT

1. Does this administrative regulation relate to any program, service, or requirements of a state or local government (including cities, counties, fire departments, or school districts)? Yes

2. What units, parts or divisions of state or local government (including cities, counties, fire departments, or school districts) will be impacted by this administrative regulation? The Kentucky Department of Fish and Wildlife Resources Divisions of Wildlife and Law Enforcement will be impacted by this administrative regulation.

3. Identify each state or federal statute or federal regulation that requires or authorizes the action taken by the administrative regulation. KRS 150.025(1) authorizes the department to promulgate administrative regulations to establish open seasons for the taking of wildlife. KRS 150.360(1) authorizes the department to promulgate administrative regulations to restrict the methods for the taking of wildlife. KRS 150.600 authorizes the department to regulate the taking of waterfowl on public and private land. States must adhere to 50 C.F.R. Parts 20 and 21 that establishes the U.S. Fish and Wildlife Service's Federal migratory bird hunting frameworks.

4. Estimate the effect of this administrative regulation on the expenditures and revenues of a state or local government agency (including cities, counties, fire departments, or school districts) for the first full year the administrative regulation is to be in effect.

(a) How much revenue will this administrative regulation generate for the state or local government (including cities, counties, fire departments, or school districts) for the first year? No new revenue will be generated by this administrative regulation during the first year.

(b) How much revenue will this administrative regulation generate for the state or local government (including cities, counties, fire departments, or school districts) for subsequent years? No new revenue will be generated by this administrative regulation during subsequent years.

(c) How much will it cost to administer this program for the first year? There will be no additional costs incurred for the first year.

(d) How much will it cost to administer this program for subsequent years? There will be no additional costs incurred in subsequent years.

Note: If specific dollar estimates cannot be determined, provide a brief narrative to explain the fiscal impact of the administrative regulation.

Revenues (+/-):

Expenditures (+/-):

Other Explanation:

FEDERAL MANDATE ANALYSIS COMPARISON

1. Federal statute or regulation constituting the federal mandate. Wildlife and Fisheries, Federal Code of Regulations, 50 C.F.R. Part 20, Migratory Bird Hunting; Part 21, Migratory Bird Permits.

2. State compliance standards. The Department of Fish and Wildlife Resources sets migratory birds seasons within the frameworks established by the U.S. Fish and Wildlife Service and published in 50 C.F.R. Part 20, 21.

3. Minimum or uniform standards contained in the federal mandate. 50 C.F.R. Part 20 contains season frameworks for the earliest opening and latest closing date, the maximum number of days a species is open to hunting, and daily bag and possession limits. 50 C.F.R. Part 21 defines permits and the necessary requirements to hold and possess migratory game birds before, during and after periods open for hunting.

4. Will this administrative regulation impose stricter requirements, or additional or different responsibilities or requirements, than those required by the federal mandate? Yes.

5. Justification for the imposition of the stricter standard, or additional or different responsibilities or requirements. The federal mandate defines the regulatory frameworks that a state may allow. States are permitted to be more restrictive but not more liberal in their respective regulations. State management objectives necessitate more restrictive regulations to protect local, regional and/or state populations of birds important to Kentucky's waterfowl hunters. The season on snow geese is shorter than the federal framework because migration patterns for this species result in a paucity of birds early in the federal framework. The Canada goose season in the Northeast Goose Zone is shorter than is permitted in the rest of the state because of the desire to maintain a huntable population in that region of the state.

TOURISM, ARTS AND HERITAGE CABINET
Kentucky Department of Fish and Wildlife Resources
(Amendment)

301 KAR 2:222. Waterfowl hunting requirements on public lands.

RELATES TO: KRS 150.010(40), 150.305(1), 150.330, 150.340(1), (3), 150.990

STATUTORY AUTHORITY: KRS 150.025(1), 150.360, 150.600(1), 50 C.F.R. 20, 21

NECESSITY, FUNCTION, AND CONFORMITY: KRS 150.025(1) authorizes the department to promulgate administrative regulations to establish open seasons for the taking of wildlife and to regulate bag limits. KRS 150.360 authorizes the department to restrict methods of taking wildlife. KRS 150.600(1) authorizes the department to regulate the taking of waterfowl on public and private land. This administrative regulation establishes procedures for the taking of waterfowl within reasonable limits and within the frameworks established by 50 C.F.R. Parts 20 and 21.

Section 1. Definitions. (1) "Blind" means a:

(a) Concealed enclosure;

(b) Pit; or

(c) Boat.

(2) "Department blind" means a permanently fixed blind structure built by the department.

(3) "Hunt site" means a specific location where waterfowl hunting is allowed, as approved by the department or the U.S. Army Corps of Engineers.

(4) "Layout blind" means a portable blind that when fully deployed allows one (1) person to be concealed above the surface of the ground.

(5) "Party" means:

(a) A person hunting alone; or

(b) Two (2) to four (4) people who share a department blind or

hunt site.

(6) "Permanent blind" means a blind left in place by a waterfowl hunter longer than twenty-four (24) hours.

(7) "Regular waterfowl season" means the open waterfowl season that does not include the Light Goose Conservation Order or the September wood duck, teal, and Canada goose seasons as established in 301 KAR 2:221 and 2:225.

(8) "Waterfowl" is defined in KRS 150.010(40).

(9) "Wildlife Management Area" or "WMA" means a tract of land:

(a) Controlled by the department through ownership, lease, license, or cooperative agreement; and

(b) that has "Wildlife Management Area" or "WMA" as part of its official name.

Section 2. Shot requirements. A person hunting waterfowl shall not use or possess a shotgun shell:

(1) Longer than three and one-half (3 1/2) inches; or

(2) Containing:

(a) Lead shot;

(b) Shot not approved by the U.S. Fish and Wildlife Service for waterfowl hunting; or

(c) Shot larger than size "T".

Section 3. (1) Except as specified in this section or in Section 4 of this administrative regulation, on a Wildlife Management Area:

(a) A person hunting waterfowl shall not;

1. Establish or hunt from a permanent waterfowl blind;

2. Hunt within 200 yards of:

a. Another occupied hunt site;

b. Another legal waterfowl hunting party; or

c. An area closed to waterfowl hunting;

(b) A person shall not hunt in a designated recreation area or access point;

(c) More than four (4) persons shall not occupy a waterfowl blind or hunt site; and

(d) A hunter shall remove decoys and personal items daily, except that a hunter drawn for a multiday hunt may choose to leave decoys in place for the duration of the hunt.

(2) A person wanting to establish or use a permanent waterfowl blind or hunt site on Lake Barkley, Barren River Lake, Buckhorn Lake, Green River Lake, Nolin River Lake, Paintsville Lake, Rough River Lake, Sloughs, or Doug Travis Wildlife Management Areas:

(a) Shall first obtain a waterfowl blind permit from the U.S. Army Corps of Engineers or the department;

(b) May designate one (1) other person as a partner; and

(c) Shall not hold more than one (1) permit per area.

(3) A person who participates in a drawing for a hunt site permit shall:

(a) Be at least eighteen (18) years of age; and

(b) Possess:

1. A valid Kentucky hunting license;

2. A Kentucky waterfowl permit; and

3. A federal duck stamp.

(4) The holder of a hunt site permit shall:

(a) Construct or establish the blind or hunt site before November 20 or forfeit the permit;

(b) Not lock a waterfowl blind; and

(c) Remove the blind and blind materials within thirty (30) days after the close of the regular waterfowl season or be ineligible for a permit the following year, unless an extension of time is granted by the department based on weather or water level conflicts.

(5) A permanent blind, department blind, or blind site not occupied by the permit holder one (1) hour before sunrise shall be available to another hunter on a first-come, first-served basis.

(6) A waterfowl blind restriction established in this section shall not apply to a falconer if a gun or archery season is not open.

Section 4. Wildlife Management Area Requirements. (1) The regular waterfowl season provisions shall apply, as established in 301 KAR 2:221, except as established in this section.

(2) The provisions of this section shall not apply to a waterfowl hunting season that opens prior to October 15, as established in 301 KAR 2:225.

(3) A person shall not:

(a) Hunt on an area marked by a sign as closed to hunting;

(b) Enter an area marked by signs as closed to public access; or

(c) Hunt a species on an area marked by signs as closed to hunting for that species.

(4) On Wildlife Management Areas in Ballard County:

(a) The shotgun shell possession limit shall be fifteen (15), except that the shotgun shell possession limit shall be twenty-five (25) if:

1. The daily bag limit for ducks is greater than three (3); and

2. The daily bag limit for Canada goose is greater than or equal to two (2);

(b) At least one (1) person in a waterfowl blind shall be eighteen (18) years of age or older if hunting in a department waterfowl blind or hunt site at Ballard or Boatwright WMA.

(5) At Ballard WMA:

(a) The duck, coot, and merganser season shall be December 7 through January 29. [~~30.~~]

(b) The goose season shall be December 7 through January 29. [~~30.~~]

(c) Youth waterfowl season shall be the first full weekend in February.

(d) A person hunting waterfowl shall not hunt on Monday, Tuesday, Christmas Day, or New Year's Day.

(e) A person hunting waterfowl shall:

1. Apply for the waterfowl quota hunt as established in Section 6 of this administrative regulation;

2. Not hunt waterfowl on the Ohio River from fifty (50) yards upstream of Dam 53 to fifty (50) yards downstream from the southern border of Ballard Wildlife Management Area from October 15 through March 15; and

3. Exit the area by 2 p.m. during the regular waterfowl season, except as authorized by the department.

(6) At Boatwright WMA, including the Olmsted, Peal, and Swan Lake units:

(a) A party shall:

1. Not hunt on Monday, Tuesday, Christmas Day, or New Year's Day;

2. Obtain a daily check-in card by 8 a.m. before entering the area from December 7 through January 29. [~~8 through January 30.~~]

3. Check out the same day by:

a. Visiting the designated Check station prior to 8 a.m.; or

b. Depositing the check-in card at a department-designated drop point after 8 a.m.

(b) Duck season shall be open one-half (1/2) hour before sunrise to sunset beginning Thanksgiving Day for four (4) consecutive days on areas of Boatwright WMA that are open to hunting.

(c) A department blind or hunt site shall be assigned through a daily drawing through January 30.

(d) A department blind or hunt site shall be offered to another hunter on a first-come, first-served basis, if the blind or hunt site has not been assigned during the daily drawing.

(e) Waterfowl hunters shall exit the area by 2 p.m. during the regular waterfowl season.

(f) A boat blind shall not be permitted in flooded timber, except:

1. During periods of flood if no other access is possible; or

2. A mobility-impaired hunter may hunt from a boat.

(g) A party shall only hunt waterfowl:

1. From a department blind; or

2. From layout blinds set so that all layout blinds in the party lie within a twenty-five (25) foot radius from the center of the party, and within 200 yards of a hunt site in December and January during the regular waterfowl season.

(h) On the Peal unit:

1. More than seven (7) parties shall not hunt at the same time on Buck Lake or Flat Lake;

2. More than four (4) parties shall not hunt at the same time on Fish Lake;

3. More than three (3) parties shall not hunt at the same time on First Lake or Second Lake;

4. A party shall not hunt waterfowl except within twenty-five (25) feet of a hunt site during December and January.

(i) On the Swan Lake Unit:

1. A person shall not hunt waterfowl from November 25 through December 5;

2. The area open to hunting during the regular waterfowl season shall be open for the Light Goose Conservation Order season as established in 301 KAR 2:221; and

3. Blind restrictions shall not apply to the Light Goose Conservation Order season.

(7) Lake Barkley WMA.

(a) A permanent blind shall only be established within ten (10) yards of a blind site;

(b) Waterfowl refuge areas:

1. The area west of the Cumberland River channel, as marked by buoys, between river mile fifty-one (51), at Hayes Landing Light, south to the Tennessee Valley Authority's power transmission lines at river mile fifty-five and five-tenths (55.5) shall be closed from November 1 through February 15; and

2. The area within Honker Bay and Fulton Bay, as marked by buoys and signs, shall be closed from November 1 through March 15.

(c) A person shall not hunt from October 15 through March 15:

1. On Duck Island; or

2. Within 200 yards of Duck Island.

(8) Barren River Lake WMA. A person hunting waterfowl:

(a) May use a breech-loading shotgun along the shoreline of the Peninsula Unit; and

(b) Shall not use a breech-loading firearm elsewhere on the area.

(9) Miller Welch-Central Kentucky WMA. A person shall not hunt waterfowl from October 15 through January 14.

(10) Lake Cumberland WMA. The following sections shall be closed to the public from October 15 through March 15:

(a) The Wesley Bend area, bounded by Fishing Creek, Beech Grove Road and Fishing Creek Road; and

(b) The Yellowhole area, bounded by Fishing Creek Road and Hickory Nut Road.

(11) Pioneer Weapons WMA. A person hunting waterfowl:

(a) May use a breech-loading shotgun along the shoreline of Cave Run Lake; and

(b) Shall not use a breech-loading firearm elsewhere on the area.

(12) Doug Travis WMA.

(a) Shooting hours shall be one-half (1/2) hour before sunrise until 2 p.m.

(b) A person shall not enter a hunting area prior to 4 a.m. daily.

(c) A person hunting waterfowl shall exit the area by 2 p.m. during waterfowl season, except as authorized by the department.

(d) [~~(c)~~] On Black Lake, Fish Lake, Forked Lake, Indian Camp Lake, Number Four Lake, and Upper Goose Lake, all waterfowl hunting after November 1:

1. Shall be from hunt sites assigned by a random preseason drawing; and

2. Shall be within ten (10) yards of a hunt site, including periods of Mississippi River flooding.

(13) Grayson Lake WMA. A person shall not hunt waterfowl:

(a) Within the no-wake zone at the dam site marina;

(b) From the shore of Camp Webb;

(c) On Deer Creek Fork; and

(d) Within three-quarters (3/4) of a mile from the dam.

(14) Green River Lake WMA.

(a) Shooting hours shall be one-half (1/2) hour before sunrise until 2 p.m.

(b) A person shall not enter a hunting area prior to 4 a.m. daily.

(15) Kaler Bottoms WMA.

(a) Shooting hours shall be one-half (1/2) hour before sunrise until 2 p.m.

(b) A person shall not enter a hunting area prior to 4 a.m. daily.

(16) Land Between the Lakes National Recreation Area.

(a) The following portions shall be closed to the public from November 1 through March 15:

1. Long Creek Pond;

2. The eastern one-third (1/3) of Smith Bay, as marked by buoys; and

3. The eastern two-thirds (2/3) of Duncan Bay, as marked by buoys;

(b) The following portions shall be closed to waterfowl hunting:

1. The Environmental Education Center; and

2. Energy Lake.

(c) A person shall possess an annual Land Between the Lakes Hunting Permit if hunting waterfowl:

1. Inland from the water's edge of Kentucky Lake or Barkley Lake; or

2. From a boat on a flooded portion of Land Between the Lakes when the lake level is above elevation 359.

(d) A person shall not hunt waterfowl on inland areas during a quota deer hunt.

(e) A person shall not establish or use a permanent blind:

1. On an inland area; or

2. Along the Kentucky Lake shoreline of Land Between the Lakes.

(f) A person hunting waterfowl shall remove decoys and personal items daily.

(17) Obion Creek WMA.

(a) Shooting hours shall be one-half (1/2) hour before sunrise until 2 p.m.

(b) A person shall not enter a hunting area prior to 4 a.m. daily.

(18) Ohio River Islands WMA.

(a) A person shall not hunt from October 15 through March 15 on the Kentucky portion of the Ohio River from Smithland Lock and Dam upstream to the power line crossing at approximately river mile 911.5.

(b) Stewart Island shall be closed to public access from October 15 through March 15[~~, except for those drawn for a quota deer hunt~~].

(c) Shooting hours shall be one-half (1/2) hours before sunrise until 2 p.m.

(d) A person shall not enter a hunting area prior to 4 a.m. daily.

(19) Peabody WMA.

(a) Shooting hours shall be one-half (1/2) hour before sunrise until 2 p.m.

(b) A person shall not enter a hunting area prior to 4 a.m. daily.

(c) The following areas, as posted by signs, shall be closed to the public from October 15 through March 15:

1. The Sinclair Mine area, bounded by Hwy 176, the haul road, and Goose Lake Road; and

2. The Ken area, bounded by Wysox Road, H2 Road, H1 Road, and H6 Road.

(20) Robinson Forest WMA. The main block of the WMA shall be closed to waterfowl hunting.

(21) Sloughs WMA.

(a) Shooting hours shall be one-half (1/2) hour before sunrise until 2 p.m.

(b) A person shall not enter a hunting area prior to 4 a.m. daily.

(c) [~~(b)~~] A person hunting waterfowl shall exit the area by 2 p.m. during the regular waterfowl season.

(d) [~~(c)~~] On the Grassy-Pond Powell's Lake Unit, a person hunting waterfowl:

1. Shall hunt:

a. From a department blind; or

b. From a blind within twenty-five (25) yards of a blind site.

2. Shall remove decoys and personal items from the area on a daily basis.

(e) On the Jenny Hole-Highlands Creek Unit, a person hunting waterfowl

1. Shall hunt:

a. From a department blind;

b. Within twenty-five (25) yards of a hunt site; or

c. No closer than 200 yards of another hunting party.

2. Shall remove decoys and personal items from the area on a daily basis.

(f) If the Ohio River reaches a level that requires boat access, a waterfowl hunter:

1. May hunt from a boat without regard to department blinds; and

2. Shall not hunt closer than 200 yards from another boat.

(g) A person hunting waterfowl on the Crenshaw and Duncan Tracts of the Sauerheber Unit:

1. Shall hunt from a blind assigned by the department through

a drawing as established in Section 6 of this administrative regulation;

2. May occupy a permitted blind if not claimed by the permittee within one (1) hour before sunrise;

3. Shall not possess more than fifteen (15) shotgun shells, except that the shotgun shell possession limit shall be twenty-five (25) if:

(a) The daily bag limit for ducks is greater than three (3); and

(b) The daily bag limit for Canada goose is greater than or equal to two (2);

4. Shall be accompanied by an adult if under eighteen (18) years of age; and

5. The waterfowl blind for a mobility-impaired person shall be open to the public if the permit holder or another mobility-impaired person has not claimed the blind on that day by one (1) hour before sunrise.

(h) The Crenshaw and Duncan II tracts of the Sauerheber Unit shall be closed to hunting except for:

1. Waterfowl from November 1 through March 15; and

2. The modern gun deer season.

(i) The remainder of the Sauerheber Unit shall be closed to the public from November 1 through March 15.

(22) South Shore WMA.

(a) The WMA shall be closed to hunting from November 15 through January 15, except for quota waterfowl hunting and dove hunting.

(b) A hunter shall use a department blind.

(c) A department blind shall be allocated by a preseason drawing.

(23) Taylorsville Lake WMA.

(a) Shooting hours shall be one-half (1/2) hour before sunrise until 2 p.m.

(b) A person shall not enter a hunting area prior to 4 a.m. daily.

(24) Yatesville Lake WMA. The following areas shall be closed to waterfowl hunting, unless authorized by Yatesville Lake State Park:

(a) The Greenbrier Creek embayment; and

(b) The lake area north from the mouth of the Greenbrier Creek embayment to the dam, including the island.

(25) Yellowbank WMA. The area designated by a sign and painted boundary marker shall be closed to the public from October 15 through March 15.

Section 5. (1) A person applying to hunt waterfowl on Ballard WMA or the Sauerheber Unit of Sloughs WMA shall:

(a) Apply through the vendor supplied by the department by calling 1-877-598-2401, or by completing the online application process on the department's website at fw.ky.gov.

(b) Apply from September 1 through September 30;

(c) Pay a three (3) dollar application fee for each application; and

(d) Not apply more than one (1) time for each hunt.

(2) A person drawn to hunt may bring up to three (3) additional hunters.

(3) A person shall be declared ineligible to hunt in department waterfowl quota hunts during the remaining portion of the waterfowl season and declared ineligible to apply for any department quota hunt the following year if the hunter violates state or federal regulations while waterfowl hunting on WMAs that have a preseason or daily drawing.

Section 6. State Parks. (1) Waterfowl hunting shall be prohibited, except there shall be an open waterfowl hunt December 13 through January 31 on designated areas of Barren River, Grayson Lake, Greenbo Lake, Lake Barkley, Lincoln Homestead, Nolin Lake, Paintsville Lake, Pennyrile Lake, Rough River Lake, and Yatesville Lake State Parks.

(2) Hunters shall check in each day at the front desk of the state park or a designated check-in location on days that the park office is not open.

(3) During check-in hunters shall be provided a map showing designated areas of the park that are open to waterfowl hunting.

(4) Hunters shall check out each day at the front desk of the state park or a designated check-out location on days that the park office is not open.

(5) Statewide waterfowl hunting requirements shall apply.

Section 7. Youth-Mentor and Mobility-Impaired Waterfowl Hunts. (1) There shall be youth-mentor waterfowl hunts on the Minor Clark and Peter W. Pfeiffer fish hatcheries each Saturday and Sunday in January.[~~:~~

~~(a) The last Sunday in December;~~

~~(b) The first Saturday in January;~~

~~(c) The first Sunday in January;~~

~~(d) The fourth Saturday in January;~~

~~(e) The fourth Sunday in January;~~

~~(f) The fifth Saturday in January; and~~

~~(g) The fifth Sunday in January.~~]

(2) There shall be a mobility-impaired waterfowl hunt at Minor Clark Fish Hatchery that is held concurrently with each youth-mentor hunt.

(3) A youth or mobility-impaired person shall register in advance and carry a department provided postcard notification on the day of the hunt.

(4) A mobility-impaired person shall also submit a mobility-impaired access permit.

(5) Each youth shall be accompanied by an adult who is eighteen (18) years or older.

(6) Each youth shall not be accompanied by more than one (1) adult.

(7) One (1) adult may accompany two (2) youths.

(8) A mobility-impaired hunter may be accompanied by no more than one (1) assistant who may also hunt.

(9) A person shall hunt from an established blind and shall not change blinds.

(10) A blind shall not be used by more than four (4) hunters.

(11) A person shall only discharge a firearm from a blind.

(12) A person shall not possess more than fifteen (15) shotshells.

(13) A waterfowl hunter, mentor, or assistant shall immediately retrieve downed birds.

(14) A person shall encase a firearm if traveling to and from a blind.

(15) Hunting shall end at noon, and hunters shall exit the area by 1 p.m.

(16) All decoys and equipment shall be removed at the end of each day's hunt.

(17) A hunter shall report harvest by depositing a completed hunt permit at the designated location.

BENJY KINMAN, Deputy Commissioner,
For DR. JONATHAN GASSETT, Commissioner
MARCHETA SPARROW, Secretary
APPROVED BY AGENCY: August 19, 2011.
FILED WITH LRC: September 20, 2011 at 4 p.m.

PUBLIC HEARING AND PUBLIC COMMENT PERIOD: A public hearing on this administrative regulation shall be held on November 28, 2011, at 2 p.m. at the Department of Fish and Wildlife Resources in the Commission Room of the Arnold L. Mitchell Building, #1 Sportsman's Lane, Frankfort, Kentucky. Individuals interested in attending this hearing shall notify this agency in writing by five business days prior to the hearing of their intent to attend. If no notification of intent to attend the hearing is received by that date, the hearing may be canceled. This hearing is open to the public. Any person who attends will be given an opportunity to comment on the proposed administrative regulation. A transcript of the public hearing will not be made unless a written request for a transcript is made. If you do not wish to attend the public hearing, you may submit written comments on the proposed administrative regulation by November 30, 2011. Send written notification of intent to attend the public hearing or written comments on the proposed administrative regulation to:

CONTACT PERSON: Rose Mack, Department of Fish and Wildlife Resources, Arnold L. Mitchell Building, #1 Sportsman's Lane, Frankfort, Kentucky 40601, phone (502) 564-3400, fax (502) 564-9136.

REGULATORY IMPACT ANALYSIS AND TIERING STATEMENT

Contact Person: Rose Mack

(1) Provide a brief summary of:

(a) What the administrative regulation does: This administrative regulation establishes waterfowl seasons, bag limits and requirements on public lands within federal migratory bird hunting frameworks established in 50 C.F.R. Part 20 according to the U.S. Fish and Wildlife Service (USFWS).

(b) The necessity of the administrative regulation: The necessity of this administrative regulation is to establish the 2011–2012 waterfowl hunting requirements in accordance with the USFWS and Kentucky Department of Fish and Wildlife Resources management objectives.

(c) How does this administrative regulation conform to the authorizing statute: KRS 150.025 authorizes the department to establish hunting season dates, bag limits and other hunting requirements. KRS 150.360 authorizes the department to restrict methods and hunting hours for taking wildlife. KRS 150.600 authorizes the department to regulate the taking of waterfowl on public and private land.

(d) How will this administrative regulation assist in the effective administration of the statutes: This administrative regulation manages waterfowl populations and hunting opportunity consistent with state, national and international management goals.

(2) If this is an amendment to an existing administrative regulation, provide a brief summary of:

(a) How the amendment will change the existing administrative regulation: This amendment sets a daily entry time for waterfowl hunting on high use waterfowl management areas and establishes youth mentor and mobility impaired hunts on specific fish hatcheries owned by the state.

(b) The necessity of the amendment to this administrative regulation: This amendment is necessary to provide adequate public hunting opportunity with minimal area use conflict.

(c) How does the amendment conform to the authorizing statutes: See (1)(c) above.

(d) How the amendment will assist in the effective administration of the statutes: See (1)(d) above.

(3) List the type and number of individuals, businesses, organizations or state and local governments that will be affected: There are approximately 20,000 waterfowl hunters in Kentucky that may be affected by this administrative regulation.

(4) Provide an analysis of how the entities identified in question (3) will be impacted by either the implementation of this administrative regulation, if new or by the change, if it is an amendment, including:

(a) List the actions that each of the regulated entities identified in question (3) will have to take to comply with this administrative regulation or amendment: The amendments in season dates and hunting requirements will be published in the fall waterfowl hunting guide and on the department's website. Hunters will need to follow all applicable amendments to the hunting seasons.

(b) In complying with this administrative regulation or amendment, how much will it cost each of the entities identified in question (3): There will be no additional or amended costs to those identified in question (3).

(c) As a result of compliance, what benefits will accrue to the entities identified in question (3): There will be continued opportunity for quality waterfowl hunting on public areas.

(5) Provide an estimate of how much it will cost to implement this administrative regulation:

(a) Initially: This administrative regulation change will result in no additional cost to the Kentucky Department of Fish and Wildlife Resources to administer.

(b) On a continuing basis: There will be no additional cost on a continuing basis.

(6) What is the source of funding to be used for implementation and enforcement of this administrative regulation? The source of funding is the State Game and Fish fund.

(7) Provide an assessment of whether an increase in fees or funding will be necessary to implement this administrative regulation, if new, or by the change if it is an amendment. It will not be necessary to increase any other fees or funding to implement this administrative regulation.

(8) State whether or not this administrative regulation establishes any fees directly or indirectly increases any fees: No new fees will be established.

(9) TIERING: Is tiering applied? Tiering was not applied. The same guidelines and limits apply to all waterfowl hunters.

FISCAL NOTE ON STATE OR LOCAL GOVERNMENT

1. Does this administrative regulation relate to any program, service, or requirements of a state or local government (including cities, counties, fire departments, or school districts)? Yes

2. What units, parts or divisions of state or local government (including cities, counties, fire departments, or school districts) will be impacted by this administrative regulation? The Kentucky Department of Fish and Wildlife Resources Divisions of Wildlife and Law Enforcement will be impacted by this administrative regulation.

3. Identify each state or federal statute or federal regulation that requires or authorizes the action taken by the administrative regulation. KRS 150.025(1) authorizes the department to promulgate administrative regulations to establish open seasons for the taking of wildlife. KRS 150.360(1) authorizes the department to promulgate administrative regulations to restrict the methods for the taking of wildlife. KRS 150.600 authorizes the department to regulate the taking of waterfowl on private and public land.

4. Estimate the effect of this administrative regulation on the expenditures and revenues of a state or local government agency (including cities, counties, fire departments, or school districts) for the first full year the administrative regulation is to be in effect.

(a) How much revenue will this administrative regulation generate for the state or local government (including cities, counties, fire departments, or school districts) for the first year? No new revenue will be generated by this administrative regulation during the first year.

(b) How much revenue will this administrative regulation generate for the state or local government (including cities, counties, fire departments, or school districts) for subsequent years? No new revenue will be generated by this administrative regulation during subsequent years.

(c) How much will it cost to administer this program for the first year? There will be no additional costs incurred for the first year.

(d) How much will it cost to administer this program for subsequent years? There will be no additional costs incurred in subsequent years.

Note: If specific dollar estimates cannot be determined, provide a brief narrative to explain the fiscal impact of the administrative regulation.

Revenues (+/-):

Expenditures (+/-):

Other Explanation:

FEDERAL MANDATE ANALYSIS COMPARISON

1. Federal statute or regulation constituting the federal mandate. Wildlife and Fisheries, Federal Code of Regulations, 50 C.F.R. Part 20, Migratory Bird Hunting; Part 21, Migratory Bird Permits.

2. State compliance standards. The Department of Fish and Wildlife Resources sets migratory birds seasons within the frameworks established by the U.S. Fish and Wildlife Service and published in 50 C.F.R. Part 20, 21.

3. Minimum or uniform standards contained in the federal mandate. 50 C.F.R. Part 20 contains season frameworks for the earliest opening and latest closing date, the maximum number of days a species is open to hunting, and daily bag and possession limits. 50 C.F.R. Part 21 defines permits and the necessary requirements to hold and possess migratory game birds before, during and after periods open for hunting.

4. Will this administrative regulation impose stricter requirements, or additional or different responsibilities or requirements, than those required by the federal mandate? Yes.

5. Justification for the imposition of the stricter standard, or additional or different responsibilities or requirements. The federal mandate defines the regulatory frameworks that a state may allow.

States are permitted to be more restrictive but not more liberal in their respective regulations. State management objectives necessitate more restrictive regulations to protect local, regional and/or state populations of birds important to Kentucky's waterfowl hunters. The greatest wintering and migrating waterfowl concentrations are located on public lands managed by the Department. The Department imposes more restrictive hunting regulations on these lands in effort to meet waterfowl management objectives while still providing quality hunting opportunity.

JUSTICE AND PUBLIC SAFETY CABINET
Department of Kentucky State Police
(Amendment)

502 KAR 11:020. Applicant photograph requirements for license to carry concealed deadly weapon.

RELATES TO: KRS 237.110
STATUTORY AUTHORITY: KRS 16.080, 17.080, 237.110(8)(b)
NECESSITY, FUNCTION, AND CONFORMITY: KRS 237.110(8)(b) requires the Department of Kentucky State Police to establish the requirements for the photograph to be submitted by an applicant for a license to carry a concealed deadly weapon. This administrative regulation establishes the requirements for the photograph.

Section 1. The photograph of the applicant required by KRS 237.110(8)(b) shall not be an image produced by a copier or copy equipment and shall:
(1) Be an original color photograph or a color photographic copy developed from the negative of an original photograph and:
(a) Be no less than three and one-half (3 1/2) inches by four (4) inches;
(b) Not exceed four (4) inches by six (6) inches;
(3) Be a color photograph from a digital camera, rated for seven (7) megapixels or greater, printed on photograph quality paper; or
(4) Be an original color passport style photograph that is:
(a) 2 x 2 inches in size; and
(b) Between 1 inch and 1 3/8 inches from the bottom of the chin to the top of the head.
(5) Display the full front of the head and the facial features of the applicant; and
(6) Not be a photograph of the applicant wearing:
(a) Sunglasses;
(b) A hat; or
(c) Attire that obscures a facial feature, hair or hairline.[~~(1) Be no less than three and one-half (3 1/2) inches by four (4) inches;~~
~~(2) Not exceed four (4) inches by five (5) inches;~~
~~(3) Be an original photograph or a photographic copy developed from the negative of an original photograph;~~
~~(4) Not be an image produced by a digital camera, computer or a copier, or other copy equipment or copy machine;~~
~~(5) Display the full front of the head and the facial features of the applicant; and~~
~~(6) Not be a photograph of the applicant wearing:~~
~~(a) Sunglasses;~~
~~(b) A hat; or~~
~~(c) Attire that obscures a feature of the applicant's face~~.]

Section 2. The department shall:
(1) Consider an application incomplete if an applicant submits a photograph that it determines does not comply with the requirements of Section 1 of this administrative regulation; and
(2) Notify the sheriff who transmitted the application form and the applicant pursuant to the provisions of 502 KAR 11:040.

RODNEY BREWER, Commissioner
APPROVED BY AGENCY: October 11, 2011
FILED WITH LRC: October 13, 2011 at 3 p.m.
PUBLIC HEARING AND PUBLIC COMMENT PERIOD: A public hearing on this administrative regulation shall be held on the 30th day of November, 2011 at 9:00 a.m. at Kentucky State Police Headquarters, 919 Versailles Road, Frankfort, Kentucky 40601. Individuals interested in being heard at this hearing shall notify this agency in writing by the 21st day of November, 2011, five workdays prior to the hearing, of their intent to attend. If you have a disability for which the Department of State Police needs to provide accommodations, please notify us of your requirement by the 21st day of November, 2011. This request does not have to be in writing. If no notification of intent to attend the hearing is received by that date, the hearing may be cancelled. This hearing is open to the public. Any person who wishes to be heard will be given an opportunity to comment on the proposed administrative regulation. A transcript of the public hearing will not be made unless a written request for a transcript is made. If you do not wish to be heard at the public hearing, you may submit written comments on the proposed administrative regulation. Written comments shall be accepted until the 30th day of November, 2011. Send written notification of intent to be heard at the public hearing or written comments on the proposed administrative regulation to the contact person.
CONTACT PERSON: Emily M. Perkins, Kentucky State Police, 919 Versailles Road, Frankfort, Kentucky 4060, phone (502) 782-178, fax (502) 573-1636.

REGULATORY IMPACT ANALYSIS AND TIERING STATEMENT

Contact Person: Emily M. Perkins
(1) Provide a brief summary of:
(a) What this administrative regulation does: This administrative regulation sets forth the provisions regarding the requirements for photographs that must be submitted with applications for a license to carry a concealed deadly weapon pursuant to KRS 237.110.
(b) The necessity of this administrative regulation: KRS 237.110 provides for licensing of individuals to carry a concealed deadly weapon in the Commonwealth of Kentucky. KRS 237.110(8)(b) requires the Department of Kentucky State Police to promulgate administrative regulations to implement the requirements for photographs that must be submitted with applications to obtain a license to carry a concealed deadly weapon.
(c) How this administrative regulation conforms to the content of the authorizing statutes: This administrative regulation sets forth the requirements for photographs that must be submitted with applications to obtain a license to carry a concealed deadly weapon.
(d) How this administrative regulation currently assists or will assist in the effective administration of the statutes: This administrative regulation gives guidance to the Department of Kentucky State Police and the Sheriffs of the Commonwealth of Kentucky in regard to the photographs that must be submitted with applications to obtain a license to carry a concealed deadly weapon.
(2) If this is an amendment to an existing administrative regulation, provide a brief summary of:
(a) How the amendment will change this existing administrative regulation: It adds additional options to allow passport style photographs or digital photographs of a specified quality to be submitted with an application for a license to carry a concealed deadly weapon.
(b) The necessity of the amendment to this administrative regulation: To clarify the photograph requirements.
(c) How the amendment conforms to the content of the authorizing statutes: KRS 237.110(8)(b) requires applicants to submit photographs as prescribed by the Department of Kentucky State Police.
(d) How the amendment will assist in the effective administration of the statutes: It clarifies the photograph requirements that are authorized by KRS 237.110(8)(b).
(3) List the type and number of individuals, businesses, organizations, or state and local governments affected by this administrative regulation: All persons who seek to obtain a license to carry a concealed deadly weapon pursuant to KRS 237.110, all county sheriffs, and the Department of Kentucky State Police.
(4) Provide an analysis of how the entities identified in question (3) will be impacted by either the implementation of this administrative regulation, if new, or by the change, if it is an amendment, including:

(a) List the actions that each of the regulated entities identified in question (3) will have to take to comply with this administrative regulation or amendment: Applicants will be allowed to use digital photographs or passport photographs of a specified quality in conjunction with an application for a license to carry a concealed deadly weapon.

(b) In complying with this administrative regulation or amendment, how much will it cost each of the entities identified in question(3): No additional costs as a result of the amendments.

(c) As a result of compliance, what benefits will accrue to the entities identified in question (3): Applicants will be considered for licensure.

(5) Provide an estimate of how much it will cost to implement this administrative regulation:

(a) Initially: The costs of implementation of this administrative regulation shall be paid for by moneys generated by the concealed deadly weapon license program and collected by the Department of Kentucky State Police. The only cost to applicants will be the cost of producing a photograph for submission with application for licensure.

(b) On a continuing basis: Costs shall be paid for by moneys generated by the concealed deadly weapon license program and collected by the Department of Kentucky State Police. The only cost to applicants will be the cost of producing a photograph for submission with application for licensure.

(6) What is the source of the funding to be used for the implementation and enforcement of this administrative regulation: Costs shall be paid for by moneys generated by the concealed deadly weapon license program and collected by the Department of Kentucky State Police. The cost of producing a photograph for submission with application for licensure will be borne by the applicant.

(7) Provide an assessment of whether an increase in fees or funding will be necessary to implement this administrative regulation, if new, or by the change if it is an amendment: No increase in fees or funding is required.

(8) State whether or not this administrative regulation established any fees or directly or indirectly increased any fees: No.

(9) TIERING: Is tiering applied? No. The process is applied equally to all that receive the service.

FISCAL NOTE ON STATE OR LOCAL GOVERNMENT

Contact Person: Emily M. Perkins

1. Does this administrative regulation relate to any program, service, or requirements of a state or local government (including cities, counties, fire departments, or school districts)? Yes

2. What units, parts or divisions of state or local government (including cities, counties, fire departments, or school districts) will be impacted by this administrative regulation? The Department of Kentucky State Police and all county sheriffs.

3. Identify each state or federal statute or federal regulation that requires or authorizes the action taken by the administrative regulation. KRS 237.110

4. Estimate the effect of this administrative regulation on the expenditures and revenues of a state or local government agency (including cities, counties, fire departments, or school districts) for the first full year the administrative regulation is to be in effect.

(a) How much revenue will this administrative regulation generate for the state or local government (including cities, counties, fire departments, or school districts) for the first year? None.

(b) How much revenue will this administrative regulation generate for the state or local government (including cities, counties, fire departments, or school districts) for subsequent years? None.

(c) How much will it cost to administer this program for the first year? The costs of implementation of this administrative regulation shall be paid for by money generated by the concealed deadly weapon license program and collected by the Department of Kentucky State Police.

(d) How much will it cost to administer this program for subsequent years? The costs of implementation of this administrative regulation shall be paid for by moneys generated by the concealed deadly weapon license program and collected by the Department of Kentucky State Police. The CCDW program is revenue and cost neutral. If revenue exceeds costs for a particular year, it is rolled over to cover equipment upgrades in future years which would otherwise greatly exceed annual revenue.

Note: If specific dollar estimates cannot be determined, provide a brief narrative to explain the fiscal impact of the administrative regulation.

Revenues (+/-):

Expenditures (+/-):

Other Explanation: See (4)(a)-(d) for explanation.

TRANSPORTATION CABINET
Office of the Secretary
Office of Audits
(Amendment)

600 KAR 6:080. Financial records and audit or other engagement of firms.

RELATES TO: KRS 45A.800-45A.835, 23 C.F.R. 172, [~~26 C.F.R. 1.167,~~] 48 C.F.R. 30, 31, Chapter 99,[~~ Subchapter B, ~~]23 U.S.C. 112(b)(2)

STATUTORY AUTHORITY: KRS 45A.807(2)

NECESSITY, FUNCTION, AND CONFORMITY: KRS 45A.807(2) requires the Transportation Cabinet to promulgate administrative regulations to implement its procurement of engineering or engineering-related services pursuant to KRS 45A.800 to 45A.835. The U.S. Department of Transportation requires all engineering or engineering-related projects that [~~which~~] it funds to be subject to the cost principles or accounting standards established in 48 C.F.R. 30, 31, and Chapter 99 [~~and 31~~]. This administrative regulation establishes the [~~audit~~] methodology to be used by a cabinet auditor for an engineering or engineering-related service agreement entered into by the cabinet pursuant to KRS 45A.800 to 45A.835; establishes the requirements for keeping financial records; and requires all firms contracting with or prequalified by the cabinet to comply with the federal regulations.

Section 1. Definition. (1) "Common control" means a situation in which a related party has direct or indirect control over the management, operating, or financial policies of the related entity. Control may exist by ownership, contract, or other methods even if a related party owns less than fifty (50) percent of the related entity.

(2) "Other engagement" means an examination, review, or agreed-upon procedures engagement or a compilation conducted in accordance with Government Auditing Standards available at the Government Accountability Office, www.gao.gov, or the standards issued by the American Institute of Certified Public Accountants, www.aicpa.org, including:

1. Statements on Auditing Standards;

2. Statements on Standards for Attestation Engagements; or

3. Statements on Standards for Accounting and Review Services.

Section 2. [~~Section 1.~~] Financial Records of Firms. (1) A firm that has: [~~which has~~]

(a) Requested prequalification;[~~, has~~]

(b) Been prequalified;[~~, is under contract,~~] or

(c) [~~Has~~] Been selected to provide professional engineering or related services to the Transportation Cabinet shall maintain and allow the cabinet access to all books, records, and accounts related to the scope of the audit [~~:~~

~~(a) All financial or other information necessary to determine or verify the firm's direct wage rates, indirect cost rates, overhead, and direct project charges:~~

~~(b) All other information necessary to verify the firm's application for prequalification or renewal of prequalification; and~~

~~(c) Payroll~~].

(2)(a) A firm shall maintain [~~all~~] financial records including payroll time records for all employees, including the firm's principals, in accordance with 48 C.F.R. Parts 30, 31, and Chapter 99.

(b) The financial records of a firm shall be retained and made available to the Transportation Cabinet for three (3) years after the end of the firm's fiscal year [~~until after the next audit performed by the Transportation Cabinet or for five (5) years, whichever occurs~~

~~first~~].

(c) A firm that has worked on a cabinet project shall retain the financial records pertaining to the project for three (3) years following the date of the final payment from the cabinet.

(3) If a firm is notified by the Transportation Cabinet of a pending audit or other engagement, the firm shall send the information requested by the auditor by mail or electronic mail. [~~auditor may request that some portions of the needed information be mailed to him or her in advance of the audit date. For the audit, the firm shall provide the following information to the auditor when he or she arrives:~~

~~(a) Chart of accounts;~~

~~(b) The latest fiscal or calendar year financial statement of the firm. If one is available which was compiled, reviewed, or audited by an independent CPA, it shall also be made available to the auditor;~~

~~(c) Income tax returns for the audit year;~~

~~(d) Statement of company policies to include personnel policies, personal leave time, vacation time, sick leave, overtime, pay raise, travel, subsistence reimbursement, bonuses, employment, retirement plans, and other administrative policies;~~

~~(e) For the audit period, a breakdown of the total project fees from all contracts by indirect and direct cost, including a detailed listing of the direct costs;~~

~~(f) General ledger;~~

~~(g) Cash disbursements and accounts payable journals;~~

~~(h) All leases, including a lease on office space, buildings, machinery, copiers, equipment, and motor vehicles;~~

~~(i) Schedule of current personnel by classification;~~

~~(j) Most current payroll register;~~

~~(k) All federal, state, and local payroll tax forms;~~

~~(l) Billing statements;~~

~~(m) List of bonuses to individual employees and the date paid;~~

~~(n) The pension or retirement plan of the firm and the contributions made on behalf of each employee;~~

~~(o) List of officers and principals of the company which includes their salaries and other compensations paid during the audit year and the amount of time they work direct;~~

~~(p) All contracts which were active during the audit year; and~~

~~(q) Minutes from the directors or stockholders meetings.~~

(4)(a) Except for income tax returns and minutes from the director or stockholder meetings [~~the items set forth in subsection (3)(c) and (q) of this section~~], the firm shall allow the auditor to make a copy of books, records, and accounts related to the firm's operations if necessary for the engagement [~~the items set forth in subsection (3) of this section~~].

(b) With permission from the consultant, the auditor may:

1. Copy income tax returns and minutes from the director or stockholder meetings; or

2. Review the income tax returns and minutes from the director or stockholder meetings without removing them from the firm's premises [~~review the items set forth in subsection (3)(c) and (q) of this section but shall not remove them from the premises of the firm~~].[~~(5) A direct cost shall be determined by the provisions of 48 C.F.R. 31.202 and not by whether it is reimbursable.~~

~~Section 2. Limitations on Direct Costs. To compute the average hourly pay rate for a salaried job classification at a firm, the number of available annual working hours per year shall be 2080.~~]

Section 3. Recommended or Approved Indirect Cost Rate [~~Audits~~]. (1) If the cabinet has not audited the firm in the previous twelve (12) months, the last available recommended or approved indirect cost rate [~~audit~~] shall [~~may~~] be used for determination of the fee specified in the contract with the understanding that a contract modification may [~~shall~~] be processed if an audit or other engagement by the cabinet reveals substantial differences in overhead rates, wage rates, or direct project expenses. [~~(2)(a) If the firm has an audit which covers the time period that the Transportation Cabinet's audit will cover and which was prepared by the Defense Contract Audit Agency, an independent certified public accountant, or other audit accepted by a federal, state, or local governmental agency, the firm shall provide the audit report to the Transportation Cabinet prior to the scheduled audit.~~

~~(b) The Transportation Cabinet shall review an audit submitted pursuant to the provisions of paragraph (a) of this subsection. If necessary for an adequate review, the firm shall provide a copy of the audit work papers in addition to the audit report.~~

~~(c) The Transportation Cabinet shall approve the audit for use, disapprove the audit for use, or approve the audit for use based on limitations imposed by the Transportation Cabinet pursuant to 600 KAR 6:070.~~

~~(d) The negotiation unit shall use the overhead rates, wage rates, and direct project expenses from an audit submitted pursuant to paragraph (a) of this subsection in negotiating a fee:~~

~~1. Subject to:~~

~~a. The review performed pursuant to paragraph (b) of this subsection; and~~

~~b. An adjustment made based on a limitation imposed by the cabinet pursuant to 600 KAR 6:070; and~~

~~2. With the understanding that a contract modification shall be processed if:~~

~~a. An audit by the cabinet reveals substantial differences in overhead rates, wage rates, or direct project expenses; and~~

~~b. An overhead submission packet is received in a timely manner to allow the cabinet sufficient time to perform or verify the overhead audit.~~]

(2) Annually [~~(3) Quarterly~~], the External Audit Branch of the Transportation Cabinet shall select for audit or other engagement a sample of [~~a minimum of thirty (30) percent of the number of~~] lump sum contracts for which the final pay estimates have been submitted and paid [~~that have been completed during the previous three (3) months~~].

Section 4. Standards and Regulations [~~Audit Standards~~]. (1) The cabinet shall conduct an engagement pursuant to the following: [~~the following accounting and auditing standards shall be abided by in an audit conducted by the cabinet~~]:

(a) ["]Government Auditing Standards["];

(b) 48 C.F.R. Part 31;

(c) 48 C.F.R. Part 30;

(d) 48 C.F.R. Chapter 99; or

(e) Uniform Audit and Accounting Guide[~~"Codification of Statements on Auditing Standards (Including Statements on Standards for Attestation Engagements)";~~

~~(c) Financial Accounting Stands Board Accounting Standards Codification as of October 31, 2009" Original Pronouncements, Accounting Standards as of June 1, 2005, Volume I, Volume II, and Volume III";~~]

[~~(d) 48 C.F.R. Part 31, Contract Cost Principles and Procedures;~~

[~~(e) 48 C.F.R. Part 30, Cost Accounting Standards Administration, as it relates to 48 C.F.R. Part 31;~~

~~(f) 48 C.F.R. Chapter 99, Subchapter B, Procurement Practices and Cost Accounting Standards; and~~

~~(g) 26 C.F.R. Part 1.167, Depreciation, if a firm does not have an acceptable depreciation schedule in effect~~].

(2) Common control [~~The term "common control" or "related parties" as used in Number 57 of the "Original Pronouncements, Accounting Standards as of June 1, 2005, Volume I, Volume II, and Volume III"~~] shall be determined to exist if, in the relationship between a consultant firm and another company that [~~which~~] is involved in real property renting, leasing arrangements, or joint ventures:

(a) A principal or person with management responsibilities or significant influence in the consultant firm:

1. Owns twenty (20) percent or more of the other company;

2. Is also a principal or person with management responsibilities or significant influence in the other company;

3. Has a family member whom he or she might control or influence because of the family relationship and who is a principal or has management responsibilities or significant influence in the other company; [~~or~~]

4. Has a family member who might control or influence him or her because of the family relationship and who is a principal in, or has management responsibilities or significant influence in the other company; or

5. [~~(b)~~] The interrelationship that exists between business entities makes it appear that the same persons control or have signifi-

cant influence in those businesses.

Section 5. Audit Findings. (1)(a) Prior to the issuance of a final audit report, the auditor [~~from the Transportation Cabinet~~] shall present preliminary findings to the firm. [~~(b) If the auditor's preliminary findings include an adjustment to the overhead rate submitted by the firm, the auditor's work papers shall be included with the preliminary findings upon request by the firm.~~]

(b) [~~(c)~~] A comment from the firm in response to the auditor's preliminary findings shall be submitted in writing within fifteen (15) calendar days of the firm's receipt of the preliminary findings.

(c) [~~(d)~~] The firm's comments shall be taken into consideration in the issuance of the final report.

(2)(a) A firm shall have thirty (30) calendar days from the date the final report is received by the firm to request a review of the final report.

(b) The request for a review shall be in writing and clearly state all of the concerns with the final report and the reasons for the concerns.

(c) If the concerns and the reasons for the concerns are not clearly stated, the request for review shall be returned.

(d)1. The firm may submit a supplement to the request for review.

2. The supplement shall be submitted in writing within the thirty (30) calendar days established in paragraph (a) of this subsection.

(3) The External Audit Review Committee shall evaluate the request for review and the final report.

(4) The External Audit Review Committee shall consist of the following:

(a) Executive Director of the Office of Budget and Fiscal Management, Chair;

(b) Deputy State Highway Engineer for Project Development; and

(c) Executive Director of the Office of Legal Services.

(5) A committee member may appoint a proxy to serve on this committee.

(6) [~~If desired,~~] The External Audit Review Committee may request the firm or the auditor to answer questions in person, by electronic communication, or in writing.

(7)(a) The firm shall have thirty (30) calendar days from its receipt [~~by the firm~~] of the committee's decision to appeal the decision to the Secretary of the Transportation Cabinet.

(b) An administrative hearing to hear the appeal shall be held pursuant to the provisions of KRS Chapter 13B. [~~Section 6. Governing Federal Regulations. The following federal regulations shall govern the financial records and audits of firms:~~

~~(1) 48 C.F.R. Part 31, "Contract Cost Principles and Procedures";~~

~~(2) 48 C.F.R. Part 30, "Cost Accounting Standards Administration";~~

~~(3) 48 C.F.R. Chapter 99, Subchapter B, "Procurement Practices and Cost Accounting Standards"; and~~

~~(4) 26 C.F.R. Part 1.167, "Depreciation"~~]

Section 6. [~~Section 7.~~] Incorporation by Reference. (1) The following material is incorporated by reference:

(a) "Government Auditing Standards", Comptroller General of the United States, July, 2007;

(b) "Uniform Audit and Accounting Guide", American Association of State Highway and Transportation Officials (AASHTO), 2010. [~~(a) "Government Auditing Standards", 2003 Revision by the Comptroller General of the United States;~~]

(2) [~~(b)~~] This material may be inspected, copied, or obtained, subject to applicable copyright law, at the Division of Professional Services, External Audit Branch, Transportation Cabinet Building, 200 Mero Street, Frankfort, Kentucky 40622, Monday through Friday, 8;00 a.m. to 4:30 P.M.

(3) This material may also be obtained at the U.S. Government Printing Office, Superintendent of Documents, Mail Stop: SSOP, Washington, D.C. 20402-9328.[~~(b) "Codification of Statements on Auditing Standards (Including Statements on Standards for Attestation Engagements)", copyright 2006 by the American Institute of Certified Public Accountants, Inc.; and~~

~~(c) "Original Pronouncements, Accounting Standards as of June 1, 2005, Volume I, Volume II, and Volume III", published by the Financial Accounting Standards Board~~.

~~(2) This material may be:~~

~~(a) inspected, copied, or obtained, subject to applicable copyright law, at the Division of Audits, External Audit Branch, 200 Mero Street, Frankfort, Kentucky 40622, Monday through Friday, 8 a.m. to 4:30 p.m.; or~~

~~(b) Obtained by contacting:~~

~~1. For a copy of "Government Auditing Standards", 2003 Revision, the U.S. Government Printing Office, Superintendent of Documents, Mail Stop: SSOP, Washington, D.C. 20402-9328;~~

~~2. For a copy of "Codification of Statements on Auditing Standards (Including Statements on Standards for Attestation Engagements)", the American Institute of Certified Public Accountants, Inc., Harborside Financial Center, 201 Plaza Three, Jersey City, New Jersey 07311-3811; or~~

~~3. For a copy of "Original Pronouncements, Accounting Standards as of June 1, 2005, Volume I, Volume II, and Volume III", the Financial Accounting Standards Board, 401 Merritt 7, P.O. Box 5116, Norwalk, Connecticut 06856-5116~~].

MIKE HANCOCK, Secretary

APPROVED BY AGENCY: September 28, 2011

FILED WITH LRC: October 4, 2011 at 10 a.m.

PUBLIC HEARING AND PUBLIC COMMENT PERIOD: A public hearing on this administrative regulation shall be held on November 22, 2011 at 10:00 a.m. local time at the Transportation Cabinet, Transportation Cabinet Building, Hearing Room C121, 200 Mero Street, Frankfort, Kentucky 40622. Individuals interested in being heard at this hearing shall notify this agency in writing five (5) working days prior to the hearing, of their intent to attend. If you have a disability for which the Transportation Cabinet needs to provide accommodations, please notify us of your requirement five working days prior to the hearing. This request does not have to be in writing. If no notification of intent to attend the hearing is received by that date, the hearing may be cancelled. This hearing is open to the public. Any person who wishes to be heard will be given an opportunity to comment on the proposed administrative regulation. A transcript of the public hearing will not be made unless a written request for a transcript is made. If you do wish to be heard at the public hearing, you may submit written comments on the proposed administrative regulation. Written comments shall be accepted until the close of business November 30, 2011. Send written notification of intent to be heard at the public hearing or written comments on the proposed administrative regulation to the contact person.

CONTACT PERSON: D. Ann Dangelo, Asst. General Counsel, Transportation Cabinet, Office of Legal Services, 200 Mero Street, Frankfort, Kentucky 40622, phone (502) 564-7650, fax (502) 564-5238.

REGULATORY IMPACT ANALYSIS AND TIERING STATEMENT

Contact Person: Ann Dangelo

(1) Provide a brief summary of:

(a) What this administrative regulation does: This administrative regulation establishes the methodology to be used by a cabinet auditor for an engineering related agreement entered into by KYTC; establishes requirements for keeping financial records; requires firms contracting with, or prequalified by the cabinet to comply with federal regulations.

(b) The necessity of this administrative regulation: KRS 45A807(2) requires the cabinet to promulgate administrative regulations to implement its procurement of engineering services pursuant to KRS 45A.800 to 45A.835. The U.S. Department of Transportation requires all engineering or related projects that it funds to be subject to the cost principles or accounting standards established in 48 C.F.R. 30 and 31.

(c) How this administrative regulation conforms to the content of the authorizing statutes: This administrative regulation sets forth the audit methodology used by a Transportation Cabinet auditor for an engineering or related service agreement entered pursuant to KRS 45A.800 to 45A.835; establishes the requirements for maintaining financial records; and requires all firms contracting with or

pre-qualified by the cabinet to comply with the federal regulations.(d) How this administrative regulation currently assists or will assist in the effective administration of the statutes: This administrative regulation provides a uniform procedure consistent with federal regulations for (1) the audit methodology to be used by cabinet auditors; (2) requirements for record keeping of financial services; and (3) compliance with federal regulations.

(2) If this is an amendment to an existing administrative regulation, provide a brief summary of:

(a) How the amendment will change this existing administrative regulation:

This amendment will update the forms and standards used by cabinet auditors. It will change methodology for choosing lump sum projects to be audited. It will address updates in the federal regulations since this regulation was last amended. It will redefine the cabinet's options for engagements.

(b) The necessity of the amendment to this administrative regulation: This amendment will provide the most current forms and standards used by the cabinet for the audit process; it will reflect updates to the federal regulations.

(c) How the amendment conforms to the content of the authorizing statutes: The amendment updates the forms and standards but follows the structure provided by KRS 45A.807(2).

(d) How the amendment will assist in the effective administration of the statutes: This amendment will insure that all parties entering into an engineering agreement with the cabinet is aware of the cost principles and audit standards used by the cabinet.

(3) List the type and number of individuals, businesses, organizations, or state and local governments affected by this administrative regulation: This regulation affects all firms offering professional engineering or related services who participate in the selection process. It will affect other states with whom we share audit duties. It can effect federal and state governments, local and municipal governments, utility companies and any group that uses 48 C.F.R. Part 31 in contracting for engineering services.

(4) Provide an analysis of how the entities identified in question (3) will be impacted by either the implementation of this administrative regulation, if new, or by the change, if it is an amendment, including:

(a) List the actions that each of the regulated entities identified in question (3) will have to take to comply with this administrative regulation or amendment: Those entities that have requested pre qualification, been qualified, are under contract, or have been selected to provide professional engineering or related services to the cabinet are required to maintain and allow the cabinet access to records for audit purposes.

(b) In complying with this administrative regulation or amendment, how much will it cost each of the entities identified in question (3): There are no fees involved with these amendments. Any costs would be the administrative costs associated with record keeping.

(c) As a result of compliance, what benefits will accrue to the entities identified in question (3): The regulation informs the entities of the most current audit methodology used by the cabinet. It is possible that entities will now only have one (1) audit per year which will streamline their contracting process.

(5) Provide an estimate of how much it will cost the administrative body to implement the administrative regulation: There are no known costs associated with implementing these amendments.

(a) Initially:

(b) On a continuing basis:

(6) What is the source of the funding to be used for the implementation and enforcement of this administrative regulation: No funding is required.

(7) Provide an assessment of whether an increase in fees or funding will be necessary to implement this administrative regulation, if new, or by the change if it is an amendment: The cabinet has not increased fees and does not anticipate a need for increased funding.

(8) State whether or not this administrative regulation established any fees or directly or indirectly increased any fees: No fees are established by this regulation either directly or indirectly.

(9) TIERING: Is tiering applied? No. Tiering is not applied because all activities affected by this regulation are treated the same.

FISCAL NOTE ON STATE OR LOCAL GOVERNMENT

1.Does this administrative regulation relate to any program, service, or requirements of a state or local government (including cities, counties, fire departments, or school districts)? Yes

2. What units, parts or divisions of state or local government (including cities, counties, fire departments, or school districts) will be impacted by this administrative regulation? This administrative regulation impacts procedures in the KYTC Office of Audits, Division of Professional Services.

3. Identify each state or federal statute or federal regulation that requires or authorizes the action taken by the administrative regulation. KRS 45A.807(2)

4. Estimate the effect of this administrative regulation on the expenditures and revenues of a state or local government agency (including cities, counties, fire departments, or school districts) for the first full year the administrative regulation is to be in effect. No additional costs are required or expected.

(a) How much revenue will this administrative regulation generate for the state or local government (including cities, counties, fire departments, or school districts) for the first year? This amended regulation will not generate additional revenue.

(b) How much revenue will this administrative regulation generate for the state or local government (including cities, counties, fire departments, or school districts) for subsequent years? This amended regulation will not generate additional revenue.

(c) How much will it cost to administer this program for the first year? No costs are required or expected based on these amendments.

(d) How much will it cost to administer this program for subsequent years? No subsequent costs are anticipated.

Note: If specific dollar estimates cannot be determined, provide a brief narrative to explain the fiscal impact of the administrative regulation.

Revenues (+-):

Expenditures (+-):

Other Explanation:

TRANSPORTATION CABINET
Department Of Highways
(Amendment)

603 KAR 5:050. Uniform traffic control devices.

RELATES TO: KRS 189.337

STATUTORY AUTHORITY: KRS 189.337(2), 23 C.F.R. 655.601-603[~~Part 655 Subpart F~~]

NECESSITY, FUNCTION, AND CONFORMITY: KRS 189.337(2) requires the Transportation Cabinet, Department of Highways, to promulgate and adopt a uniform system of traffic control devices. The Federal Highway Administration in[~~through its regulation~~] 23 C.F.R. Part 655 recognizes the Manual on Uniform Traffic Control Devices for Streets and Highways MUTCD as the national standard for all traffic control devices installed on any street, highway, bicycle trail, or private road open to public travel [~~requires that the traffic control devices on all public highways or streets be in substantial conformance with the "Manual on Uniform Traffic Control Devices"~~]. This administrative regulation incorporates the MUTCD by reference [~~defines the system by incorporating by reference the "Manual on Uniform Traffic Control Devices" and the amendments adopted to the manual~~].

Section 1. Definition. (1). "Private road open to public travel" is defined by the MUTCD, Section 1A.13, Number 159.

Section 2. Traffic Control Devices. [~~Section 1. on All Public Highways. The standards and specifications set forth in~~] (1) The MUTCD published by the Federal Highway Administration[~~'s publication Manual on Uniform Traffic Control Devices for Streets and Highways "~~] shall be the standard for [~~apply to~~] all traffic control devices[~~, including signs and roadway markings,~~] installed on any street, highway, bicycle trail, or private road open to public travel [~~publicly used highway, road, street, avenue, alley, boulevard,~~

~~bridge, viaduct, or trestle, and the approaches to them, and off-street parking facilities~~] in Kentucky.

(2) The MUTCD provides standards, guidance, and options for the design and application of traffic control devices, but shall not be considered a substitute for engineering judgment.[~~Section 2. Federal Amendments to the Manual. The Manual on Uniform Traffic Control Devices and all amendments and supplements shall be maintained both at the cabinet Web site, www.transportation.ky.gov, and in hard copy at the Transportation Cabinet.~~]

Section 3. Incorporation by Reference. (1) "Manual on Uniform Traffic Control Devices for Streets and Highways", Federal Highway Administration, December, 2009 [~~2003 Edition, including Revision No. 1 dated November 2004,~~] is incorporated by reference.

(2) (a) This material may be inspected, copied, or obtained, subject to applicable copyright law, at the Transportation Cabinet, Department of Highways, Division of Traffic Operations, 200 Mero Street, Third Floor, in Frankfort, Kentucky 40622 Monday through Friday, 8 a.m. to 4:30 p.m. This material may also be obtained at the cabinet's Web site at: www.transportation.ky.gov.

STEVE WADDLE, State Highway Engineer

For MIKE HANCOCK, Secretary

APPROVED BY AGENCY: October 11, 2011

FILED WITH LRC: October 12, 2011 at 1 p.m.

PUBLIC HEARING AND PUBLIC COMMENT PERIOD: A public hearing on this administrative regulation shall be held on November 21, 2011 at 10:00 a.m. local time at the Transportation Cabinet, Transportation Cabinet Building, Hearing Room C121, 200 Mero Street, Frankfort, Kentucky 40622. Individuals interested in being heard at this hearing shall notify this agency in writing five (5) working days prior to the hearing, of their intent to attend. If you have a disability for which the Transportation Cabinet needs to provide accommodations, please notify us of your requirement five working days prior to the hearing. This request does not have to be in writing. If no notification of intent to attend the hearing is received by that date, the hearing may be cancelled. This hearing is open to the public. Any person who wishes to be heard will be given an opportunity to comment on the proposed administrative regulation. A transcript of the public hearing will not be made unless a written request for a transcript is made. If you do wish to be heard at the public hearing, you may submit written comments on the proposed administrative regulation. Written comments shall be accepted until the close of business November 30, 2011. Send written notification of intent to be heard at the public hearing or written comments on the proposed administrative regulation to the contact person.

CONTACT PERSON: D. Ann DAngelo, Asst. General Counsel, Transportation Cabinet, Office of Legal Services, 200 Mero Street, Frankfort, Kentucky 40622, phone (502) 564-7650, fax (502) 564-5238.

REGULATORY IMPACT ANALYSIS AND TIERING STATEMENT

Contact Person: Ann DAngelo

(1) Provide a brief summary of:

(a) What this administrative regulation does: This administrative regulation adopts the uniform system of traffic control devices required by the Federal Highway Administration.

(b) The necessity of this administrative regulation: The cabinet is required to adopt these standards pursuant to KRS 189.337 and federal law.

(c) How this administrative regulation conforms to the content of the authorizing statutes: This regulation adopts a manual of standards and specifications for a uniform system of official traffic control devices for use on all roads and streets as required by KRS 189.337.

(d) How this administrative regulation currently assists or will assist in the effective administration of the statutes: This regulation gives notice of what the standards are and provides a means for the public to get access to these standards.

(2) If this is an amendment to an existing administrative regulation, provide a brief summary of:

(a) How the amendment will change this existing administrative regulation: This amendment updates the state regulation by adopting the current federal edition of the Manual on Uniform Traffic Control Devices.

(b) The necessity of the amendment to this administrative regulation: This amendment is necessary to adopt the current edition of the Manual on Uniform Traffic Control Devices in order to remain compliant with federal law.

(c) How the amendment conforms to the content of the authorizing statutes: It adopts the current edition of the Manual on Uniform Traffic Control Devices as required by the Federal Highway Administration.

(d) How the amendment will assist in the effective administration of the statutes: The amendments will allow the cabinet to apply and enforce current provisions of the Manual on Uniform Traffic Control Devices.

(3) List the type and number of individuals, businesses, organizations, or state and local governments affected by this administrative regulation: This administrative regulation will affect all government entities responsible for maintaining traffic control devices. The regulation will also impact owners of private roads open to public travel.

(4) Provide an analysis of how the entities identified in question (3) will be impacted by either the implementation of this administrative regulation, if new, or by the change, if it is an amendment, including:

(a) List the actions that each of the regulated entities identified in question (3) will have to take to comply with this administrative regulation or amendment: All entities that work with traffic control devices must conform to the current standards established in the Manual on Uniform Traffic Control Devices.

(b) In complying with this administrative regulation or amendment, how much will it cost each of the entities identified in question (3): There are no fees involved with these amendments. Costs to comply with the new version of the MUTCD are based on the size of the highway network that an agency maintains. The entities are required to meet federal MUTCD standards.

(c) As a result of compliance, what benefits will accrue to the entities identified in question (3): The parties will benefit by being aware of the most current standards required in the 2009 edition of the Manual.

(5) Provide an estimate of how much it will cost the administrative body to implement the administrative regulation: There are no known costs associated with implementing these amendments.

(a) Initially: None known.

(b) On a continuing basis: None known.

(6) What is the source of the funding to be used for the implementation and enforcement of this administrative regulation: Road funds.

(7) Provide an assessment of whether an increase in fees or funding will be necessary to implement this administrative regulation, if new, or by the change if it is an amendment: The cabinet has not increased fees and does not anticipate a need for increased fees.

(8) State whether or not this administrative regulation established any fees or directly or indirectly increased any fees: No fees are established by this regulation either directly or indirectly.

(9) TIERING: Is tiering applied? Yes. The signage requirement varies based on the type of right of way and the amount of usage.

FISCAL NOTE ON STATE OR LOCAL GOVERNMENT

1. Does this administrative regulation relate to any program, service, or requirements of a state or local government (including cities, counties, fire departments, or school districts)? Yes

2. What units, parts or divisions of state or local government (including cities, counties, fire departments, or school districts) will be impacted by this administrative regulation? This administrative regulation impacts the Department of Highways and Public Works in all city and county governments.

3. Identify each state or federal statute or federal regulation that requires or authorizes the action taken by the administrative regulation. KRS 189.337 and 23 C.F.R. Part 655

4. Estimate the effect of this administrative regulation on the

expenditures and revenues of a state or local government agency (including cities, counties, fire departments, or school districts) for the first full year the administrative regulation is to be in effect. Costs to comply with the MUTCD are based on the size of the highway network that an entity maintains.

(a) How much revenue will this administrative regulation generate for the state or local government (including cities, counties, fire departments, or school districts) for the first year? This amended regulation will not generate additional revenue.

(b) How much revenue will this administrative regulation generate for the state or local government (including cities, counties, fire departments, or school districts) for subsequent years? This amended regulation will not generate additional revenue.

(c) How much will it cost to administer this program for the first year? No administrative costs are required or expected based on these amendments.

(d) How much will it cost to administer this program for subsequent years? No subsequent administrative costs are anticipated.

Note: If specific dollar estimates cannot be determined, provide a brief narrative to explain the fiscal impact of the administrative regulation.

Revenues (+-)

Expenditures (+-)

Other Explanation: The local government agencies will be able to implement these changes to the Manual as part of their regular road and street maintenance budgets. The agencies are required to meet federal MUTCD standards.

FEDERAL MANDATE ANALYSIS COMPARISON

1. Federal statute or regulation constituting the federal mandate. 23 C.F.R.655.601-603

2. State compliance standards. Kentucky has adopted and been guided by the mandated Manual on Uniform Traffic Control Devices for many years.

3. Minimum or uniform standards contained in the federal mandate. These federal regulations contain the following minimum standards:

(a) The listing of the type of signs and the placement required on each highway type;

(b) The type and placement of pavement markings required on each highway type; and

(c) Traffic controls to be used in construction, maintenance or utility work zones.

4. Will this administrative regulation impose stricter requirements, or additional or different responsibilities or requirements, than those required by the federal mandate? No. This amended regulation will update our regulation to conform to the current federal standards.

5. Justification for the imposition of the stricter standard, or additional or different responsibilities or requirements. Not applicable.

PUBLIC PROTECTION CABINET
Department of Insurance
Financial Standards and Examination Division
(Amendment)

806 KAR 3:190. Risk-based capital for insurers.

RELATES TO: KRS 304.3-120, 304.3-140, 304.3-240, 304.5-020, 304.5-030, 304.5-040, 304.5-050, 304.5-060, 304.5-070, 304.5-080, 304.5-110, 304.6, 304.7, 304.24-350, 304.33, 304.49-010

STATUTORY AUTHORITY: KRS 304.2-110, 304.3-125

NECESSITY, FUNCTION, AND CONFORMITY: KRS 304.2-110 provides that the Commissioner[~~Executive Director~~] of Insurance may make reasonable administrative regulations necessary for or as an aid to the effectuation of any provision of the Kentucky Insurance Code, KRS 304.1-010. KRS 304.3-125 provides that the commissioner may[~~is granted the authority to~~] adopt administrative regulations addressing requirements for additional capital and surplus based on the kind, type, volume and nature of insurance business transacted up to the standards prescribed by[~~that are promulgated and adopted by~~] the National Association of Insurance Commissioners[~~Executive Directors and a requirement of certification for the office. The NAIC requires that the office have this administrative regulation for accreditation~~]. This administrative regulation establishes[~~established~~] risk-based capital requirements for all insurers authorized to transact insurance business in Kentucky. [~~The risk-based capital requirements will assist the office in determining financial strength.~~]

Section 1. Definitions. (1) "Adjusted RBC report" means an RBC report which has been adjusted by the commissioner[~~executive director~~] in accordance with Section 2(6)[~~2(7)~~] of this administrative regulation.

(2) "Corrective order" means an order issued by the commissioner[~~executive director~~] specifying corrective actions which the commissioner[~~executive director~~] has determined are required.

(3) "Domestic insurer" is defined in[~~The definition of "domestic insurer" shall be governed by~~] KRS 304.1-070(1).

(4) "Foreign insurer" is defined in[~~The definition of "foreign insurer" shall be governed by~~] KRS 304.1-070(2).

(5) "Insurer" means any of the entities listed in KRS 304.33-020(1) through (6) and an industrial insured captive insurer as defined in KRS 304.49-010(8).[~~NAIC" means the National Association of Insurance Commissioners.~~]

(6) "Life and health insurer" means any insurer[~~insurance company~~] licensed to write insurance as defined in KRS 304.5-020, 304.5-030, and 304.5-040 or a licensed property and casualty insurer writing only accident and health insurance.

(7) "NAIC" means the National Association of Insurance Commissioners.

(8) "Property and casualty insurer" means any insurer[~~insurance company~~] licensed to write insurance as defined in KRS 304.5-050, 304.5-060, 304.5-070, 304.5-080, and 304.5-110 but shall not include monoline mortgage guaranty insurers, financial guaranty insurers and title insurers.

(9)[~~(8)~~] "Negative trend" means, with respect to a life or health insurer, negative trend over a period of time, as determined in accordance with the "Trend Test Calculation" included in the RBC instructions.

(10)[~~(9)~~] "RBC" means risk-based capital.

(11)[~~(10)~~] "RBC instructions" means the RBC Report including risk-based capital instructions adopted by the NAIC.

(12)[~~(11)~~] "RBC Level" means an insurer's company action level RBC, regulatory action level RBC, authorized control level RBC, or mandatory control level RBC where:

(a) "Company action level RBC" means[~~,~~] the product of two (2.0) and its authorized control level RBC;

(b) "Regulatory action level RBC" means the product of one and five-tenths (1.5) and its authorized control level RBC;

(c) "Authorized control level RBC" means the number determined under the risk-based capital formula in accordance with the RBC instructions;

(d) "Mandatory control level RBC" means the product of seven-tenths (.70) and the authorized control level RBC.

(13)[~~(12)~~] "RBC plan" means a comprehensive financial plan containing the elements specified in Section 3(2) of this administrative regulation.

(14)[~~(13)~~] "RBC report" means the report required in Section 2 of this administrative regulation.

(15)[~~(14)~~] "Revised RBC plan" means an RBC plan that has been rejected by the commissioner[~~executive director~~] and then revised by the insured.

(16)[~~(15)~~] "Total adjusted capital" means the sum of:

(a) An insurer's statutory capital and surplus as determined in accordance with the statutory accounting applicable to the annual financial statements required to be filed under KRS 304.3-240; and

(b) Any other items as specified in the RBC instructions.

Section 2. RBC Reports. (1) On or prior to March 1, every domestic insurer shall prepare and submit to the commissioner[~~executive director~~] an RBC report for the calendar year just ended.

(2) The RBC report shall be filed in a form and contain informa-

tion as is required by the RBC instructions.

(3) In addition, every domestic insurer shall file its RBC report with:

(a) The NAIC in accordance with the RBC instructions; and

(b) The insurance commissioner[~~executive director~~] in any state in which the insurer is authorized to do business, if the insurance commissioner[~~executive director~~] has notified the insurer of its request in writing, in which case the insurer shall file its RBC report not later than the later of:

1. Fifteen (15) days from the receipt of notice to file its RBC report with that state; or

2. The filing date.

(4) Requirements for life and health insurers:

(a) A life and health insurer's RBC shall be determined in accordance with the formula set forth in the RBC instructions.

(b) The formula shall take into account and may adjust for the covariance between the following which are determined in each case by applying the factors in the manner set forth in the RBC instructions:

1. The risk with respect to the insurer's assets;

2. The risk of adverse insurance experience with respect to the insurer's liabilities and obligations;

3. The interest rate risk with respect to the insurer's business; and

4. All other business risks and other relevant risks as are set forth in the RBC instructions;

(5) Requirements for property and casualty insurers:

(a) A property and casualty insurer's RBC shall be determined in accordance with the formula set forth in the RBC instructions.

(b) The formula shall take into account and may adjust for the covariance between the following which shall be determined in each case by applying the factors in the manner set forth in the RBC instructions:

1. Asset risk;

2. Credit risk;

3. Underwriting risk; and

4. All other business risk and other relevant risks as are set forth in the RBC instructions;

(6)[~~Insurers shall seek to maintain capital above the RBC levels required by this administrative regulation. An excess of capital over the amount produced by the risk-based capital requirements contained in this administrative regulation and the formulas, schedules and instructions referenced in this administrative regulation is desirable in the business of insurance. Additional capital is used and useful in the insurance business and helps to secure an insurer against various risks inherent in, or affecting, the business of insurance and not accounted for or only partially measured by the risk-based capital requirements contained in this administrative regulation.~~

~~(7)~~] If a domestic insurer files an RBC report which in the judgment of the commissioner[~~executive director~~] is inaccurate, then the commissioner[~~executive director~~] shall:

(a) Adjust the RBC report to correct the inaccuracy;

(b) Notify the insurer of the adjustment;

(c) Inform the insurer in writing of the reason for the adjustment; and

(d) Once the RBC report is adjusted, refer to the report as the adjusted RBC report.

Section 3. Company Action Level Event. (1) A company action level event shall be[~~is~~] any of the following events:

(a) The filing of an RBC report by an insurer which indicates that:

1. The insurer's total adjusted capital is greater than or equal to its regulatory action level RBC but less than its company action level RBC; or

2. If a life or health insurer, the insurer has:

a. Total adjusted capital which is greater than or equal to its company action level RBC but less than the product of its authorized control level RBC and two and five-tenths (2.5); and

b. A negative trend;

(b) The notification by the commissioner[~~executive director~~] to the insurer of an adjusted RBC report that indicates an event in paragraph (a) of this subsection, if[~~provided~~] the insurer does not challenge the adjusted RBC report under Section 7 of this administrative regulation; or

(c) If, pursuant to Section 7 of this administrative regulation, an insurer challenges an adjusted RBC report that indicates the event in paragraph (a) of this subsection, the notification by the commissioner[~~executive director~~] to the insurer that the commissioner[~~executive director~~] has, after a hearing, rejected the insurer's challenge.

(2) In the event of a company action level event, the insurer shall prepare and submit to the commissioner[~~executive director~~] an RBC plan which shall:

(a) Identify the conditions which contribute to the company action level event;

(b) Propose corrective actions which the insurer intends to take in order to eliminate the company action level event;

(c) Provide projections of the insurer's financial results in the current year and at least the four (4) succeeding years, both in the absence of proposed corrective actions and giving effect to the proposed corrective actions including:

1. Projections of statutory operating income, net income, capital, or surplus;

2. The projections for both new and renewal business may include separate projections for each major line of business and separately identify each significant income, expense, and benefit component.

(d) Identify the key assumptions impacting the insurer's projections and the sensitivity of the projections to the assumptions; and

(e) Identify the quality of the insurer's business and problems associated with the insurer's business, including the following:

1. Assets;

2. Anticipated business growth and associated surplus strain;

3. Extraordinary exposure to risk;

4. Mix of business;

5. Use of reinsurance; and

6. Other important factors.

(3) The RBC plan shall be submitted:

(a) Within forty-five (45) days of the company action level event; or

(b) If the insurer challenges an adjusted RBC report pursuant to Section 7 of this administrative regulation, within forty-five (45) days after notification to the insurer that the commissioner[~~executive director~~] has, after a hearing, rejected the insurer's challenge.

(4) Within sixty (60) days after the submission by an insurer of an RBC plan to the commissioner[~~executive director~~], the commissioner[~~executive director~~] shall notify the insurer whether the RBC plan shall be implemented or is[~~, in the judgment of the executive director~~], unsatisfactory.

(5) If the commissioner[~~executive director~~] determines that the RBC plan is unsatisfactory, the notification to the insurer shall set forth the reasons for the determination, and may set forth proposed revisions which will render the RBC plan satisfactory[~~, in the judgment of the executive director~~].

(6) Upon notification from the commissioner[~~executive director~~], the insurer shall prepare a revised RBC plan which may incorporate by reference any revisions proposed by the commissioner[~~executive director~~], and shall submit the revised RBC plan to the commissioner[~~executive director~~]:

(a) Within forty-five (45) days after the notification from the commissioner [~~executive director~~]; or

(b) If the insurer challenges the notification from the commissioner[~~executive director~~] under Section 7 of this administrative regulation, within forty-five (45) days after a notification to the insurer that the commissioner[~~executive director~~] has, after a hearing, rejected the insurer's challenge.

(7) In the event of a notification by the commissioner[~~executive director~~] to an insurer that the insurer's RBC plan or revised RBC plan is unsatisfactory, the commissioner[~~executive director~~] may [~~at the executive director's discretion,~~] subject to the insurer's right to a hearing under Section 7 of this administrative regulation, specify in the notification that the notification constitutes a regulatory action level event.

(8) Every domestic insurer that files an RBC plan or revised RBC plan with the commissioner[~~executive director~~] shall file a

copy of the RBC plan or revised RBC plan with the insurance commissioner[executive director] in any state in which the insurer is authorized to do business if:

(a) The state has an RBC provision substantially similar to Section 8(1) of this administrative regulation; and

(b) The insurance commissioner[executive director] of that state has notified the insurer of its request for the filing in writing.

(9) If the insurer is required by subsection (8) of this section to file an RBC plan or revised RBC plan with another state, then it shall be filed in that state by the latter of the following time periods:

(a) Fifteen (15) days after the receipt of notice to file a copy of its RBC plan or revised RBC plan with the state; or

(b) The date on which the RBC plan or revised RBC plan is filed under subsections (3) and (4) of this section.

Section 4. Regulatory Action Level Event. (1) A regulatory action level event shall be[is] any of the following events:

(a) The filing of an RBC report by the insurer which indicates that the insurer's total adjusted capital is greater than or equal to its authorized control level RBC but less than its regulatory action level RBC;

(b) The notification by the commissioner[executive director] to an insurer of an adjusted RBC report that indicates a regulatory action level event, if [provided] the insurer does not challenge the adjusted RBC report under Section 7 of this administrative regulation;

(c) If, pursuant to Section 7 of this administrative regulation, the insurer challenges an adjusted RBC report that indicates a regulatory action level event, the notification by the commissioner[executive director] to the insurer that the commissioner[executive director] has, after a hearing, rejected the insurer's challenge;

(d) The failure of the insurer to file an RBC report by the filing date, unless the insurer has provided an explanation for that failure [which is satisfactory to the executive director] and has cured the failure within ten (10) days after the filing date;

(e) The failure of the insurer to submit an RBC plan to the commissioner [executive director] within the time period set forth in Section 3(3) of this administrative regulation;

(f) Notification by the commissioner [executive director] to the insurer that:

1. The RBC plan or revised RBC plan submitted by the insurer is[, in the judgment of the executive director,] unsatisfactory; and

2. The notification constitutes a regulatory action level event with respect to the insurer, if[provided that] the insurer has not challenged the determination under Section 7 of this administrative regulation;

(g) If, pursuant to Section 7 of this administrative regulation, the insurer challenges a determination by the commissioner[executive director] under subsection (1)(f) of this section[paragraph (f) of this subsection], the notification by the commissioner[executive director] to the insurer that the commissioner[executive director] has, after a hearing, rejected such challenge;

(h) If[Provided that] the insurer has not challenged the determination under Section 7 of this administrative regulation, notification by the commissioner[executive director] to the insurer that:

1. The insurer has failed to adhere to its RBC plan or revised RBC plan; and

2. The insurer's failure has a substantial adverse effect on the ability of the insurer to eliminate the company action level event in accordance with its RBC plan or revised RBC plan.

(i) If, pursuant to Section 7 of this administrative regulation, the insurer challenges a determination by the commissioner[executive director] under paragraph (h) of this subsection, the notification by the commissioner[executive director] to the insurer that the commissioner[executive director] has, after a hearing, rejected the challenge.

(2) In the event of a regulatory action level event the commissioner[executive director] shall:

(a) Require the insurer to prepare and submit an RBC plan or, if applicable, a revised RBC plan;

(b) Perform an examination or analysis[as the executive director deems necessary] of the assets, liabilities, and operations of the insurer including a review of its RBC plan or revised RBC plan; and

(c) Subsequent to the examination or analysis, issue a corrective order specifying corrective actions as the commissioner[executive director] shall determine are required.

(3) In determining corrective actions, the commissioner[executive director] may take into account relevant factors based upon the commissioner's[executive director's] examination or analysis of the assets, liabilities, and operations of the insurer, which shall include [but not be limited to], the results of any sensitivity tests undertaken pursuant to the RBC instructions.

(4) The RBC plan or revised RBC plan shall be submitted:

(a) Within forty-five (45) days after the occurrence of the regulatory action level event;

(b) If the insurer challenges the adjusted RBC report pursuant to Section 7 of this administrative regulation and the challenge is not frivolous[in the judgment of the executive director], within forty-five (45) days after the notification to the insurer that the commissioner[executive director] has, after a hearing, rejected the insurer's challenge; or

(c) If the insurer challenges a revised RBC plan pursuant to Section 7 of this administrative regulation and the challenge is not frivolous[in the judgment of the executive director], within forty-five (45) days after the notification to the insurer that the commissioner[executive director] has, after a hearing, rejected the insurer's challenge.

(5) The commissioner[executive director] may retain actuaries and investment experts and other consultants as may be necessary [in the judgment of the executive director] to:

(a) Review the insurer's RBC plan or revised RBC plan;

(b) Examine or analyze the assets, liabilities, and operations of the insurer; and

(c) Formulate the corrective order with respect to the insurer.

(6) The fees, costs, and expenses relating to consultants shall be borne by the affected insurer or other party as directed by the commissioner[executive director].

Section 5. Authorized Control Level Event. (1) An authorized control level event shall be[is] any of the following events:

(a) The filing of an RBC report by the insurer which indicates that the insurer's total adjusted capital is greater than or equal to its mandatory control level RBC but less than its authorized control level RBC;

(b) The notification by the commissioner[executive director] to the insurer of an adjusted RBC report that indicates an authorized control level event, if[provided] the insurer does not challenge the adjusted RBC report under Section 7 of this administrative regulation;

(c) If, pursuant to Section 7 of this administrative regulation, the insurer challenges an adjusted RBC report that indicates an authorized control level event, notification by the commissioner[executive director] to the insurer that the commissioner[executive director] has, after a hearing, rejected the insurer's challenge;

(d) The failure of the insurer to respond[, in a manner satisfactory to the executive director,] to a corrective order, if[provided that] the insurer has not challenged the corrective order under Section 7 of this administrative regulation; or

(e) If the insurer has challenged a corrective order under Section 7 of this administrative regulation and the commissioner[executive director] has, after a hearing, rejected the challenge or modified the corrective order, the failure of the insurer to respond[, in a manner satisfactory to the executive director,] to the corrective order subsequent to rejection of modification by the commissioner[executive director].

(2) In the event of an authorized control level event with respect to an insurer, the commissioner[executive director] shall:

(a) Take actions as are required under Section 4 of this administrative regulation regarding an insurer to which a regulatory action level event has occurred; or

(b) Take actions as are necessary to cause the insurer to be placed under regulatory control pursuant to KRS Chapter 304, Subtitle 33 if the commissioner determines[executive director deems] it to be in the best interest of the policyholders, creditors of the insurer, and public.

(3) The authorized control level event shall be deemed sufficient grounds for the commissioner[~~executive director~~] to take action under KRS Chapter 304, Subtitle 33. If [~~In the event~~] the commissioner[~~executive director~~] takes actions under this section pursuant to an adjusted RBC report, the insurer shall be entitled to the[~~such~~] protections [~~as are~~] afforded to insurers under the provisions of the section pertaining to summary proceedings.

Section 6. Mandatory Control Level Event. (1) A mandatory control level event shall be[~~is~~] any of the following events:

(a) The filing of an RBC report which indicates that the insurer's total adjusted capital is less than its mandatory control level RBC;

(b) Notification by the commissioner[~~executive director~~] to the insurer of an adjusted RBC report that indicates a mandatory control level event, if[~~provided~~] the insurer does not challenge the adjusted RBC report under Section 7 of this administrative regulation; or

(c) If, pursuant to Section 7 of this administrative regulation, the insurer challenges an adjusted RBC report that indicates a mandatory control level event, notification by the commissioner[~~executive director~~] to the insurer that the commissioner[~~executive director~~] has, after a hearing, rejected the insurer's challenge.

(2) In the event of a mandatory control level event for a life insurer:

(a) The commissioner[~~executive director~~] shall take actions as are necessary [~~to place the insurer under regulatory control~~] pursuant to KRS Chapter 304, Subtitle 33.

(b) If the commissioner[~~executive director~~] takes actions pursuant to an adjusted RBC report, the insurer shall be entitled to the protections of KRS Chapter 304, Subtitle 33 pertaining to summary proceedings.

(c) The commissioner[~~executive director~~] may forego action for up to ninety (90) days after the mandatory control level event if the commissioner[~~executive director~~] finds there is a reasonable expectation that the mandatory control level event may be eliminated within the ninety (90) day period.

(3) In the event of a mandatory control level event for a property and casualty insurer:

(a) The commissioner[~~executive director~~] shall take actions as are necessary[~~to place the insurer under regulatory control~~] pursuant to KRS Chapter 304, Subtitle 33.

(b) In the case of an insurer which is writing no business and which is running-off its existing business, the commissioner[~~executive director~~] may allow the insurer to continue its run-off under the supervision of the commissioner[~~executive director~~].

(c) In either event, the mandatory control level event shall be [~~deemed~~] sufficient grounds for the commissioner[~~executive director~~] to take action under KRS Chapter 304, Subtitle 33.

(d) If the commissioner[~~executive director~~] takes actions pursuant to an adjusted RBC report, the insurer shall be entitled to the protections of KRS Chapter 304, Subtitle 33 pertaining to summary proceedings.

(e) The commissioner[~~executive director~~] may forego action for up to ninety (90) days after the mandatory control level event if the commissioner[~~executive director~~] finds there is a reasonable expectation that the mandatory control level event may be eliminated within the ninety (90) day period.

Section 7. Hearings. (1) Upon any of the following notifications, the insurer shall have the right to a confidential[~~office~~] hearing at which the insurer may challenge any determination or action by the commissioner[~~executive director~~]:

(a) Notification to an insurer by the commissioner[~~executive director~~] of an adjusted RBC report; or

(b) Notification to an insurer by the commissioner[~~executive director~~] that:

1. The insurer's RBC plan or revised RBC plan is unsatisfactory; and

2. The notification constitutes a regulatory action level event with respect to the insurer; or

(c) Notification to any insurer by the commissioner[~~executive director~~] of the following:

1. The insurer has failed to adhere to its RBC plan or revised RBC plan; and

2. This failure has a substantial adverse effect on the ability of the insurer to eliminate the company action level event with respect to the insurer in accordance with its RBC plan or revised RBC plan; or

(d) Notification to an insurer by the commissioner[~~executive director~~] of a corrective order.

(2) The insurer shall notify the commissioner[~~executive director~~] of its request for a hearing within five (5) days after the notification by the commissioner[~~executive director~~] under subsection (1) of this section.

(3) Upon receipt of the insurer's request for a hearing, the commissioner[~~executive director~~] shall set a date for the hearing, which shall be no less than ten (10) nor more than thirty (30) days after the date of the insurer's request.

Section 8. Confidentiality; Prohibition on Announcements, Prohibition on Use in Ratemaking. (1) The following records shall be[~~are~~] confidentially disclosed pursuant to the requirements of this administrative regulation and shall be[~~constitute~~] proprietary information that, if disclosed, would create an unfair competitive advantage to competitors and shall be kept confidential by the commissioner[~~executive director~~]:

(a) RBC reports;

(b) RBC plans;

(c) Results or report of an examination or analysis of an insurer performed pursuant to an RBC plan; and

(d) Corrective order.

(2) Comparison of insurer's total adjusted capital to any RBC levels shall be a regulatory tool and shall not be used to rank insurers.

(3) An insurer, agent, broker, or other person engaged in the insurance business shall not disseminate orally or in any manner or cause to be disseminated directly or indirectly to the public an assertion, representation, or statement with regard to RBC levels of any insurer or any component of the calculation. [~~The comparison of an insurer's total adjusted capital to any of its RBC levels is a regulatory tool which may indicate the need for possible corrective action with respect to the insurer, and is not intended as a means to rank insurers generally.~~]

(4) If a false statement with regard to a comparison of an insurer's total adjusted capital to its RBC levels or an inappropriate comparison is made, and the falsity is substantially proved, an insurer may issue a statement to rebut the false statement.

(5) RBC instructions, RBC reports, adjusted RBC reports, RBC plans, and revised RBC plans:

(a) Shall be used solely by the commissioner[~~executive director~~] in monitoring the solvency of insurers and the need for possible corrective action with respect to insurers;

(b) Shall not be used in rate making or as evidence in rate proceedings; and

(c) Shall not be used by the commissioner[~~executive director~~] to calculate or derive any elements of an appropriate premium level or rate of return for any line of insurance which an insurer or any affiliate is authorized to write.

Section 9. Exemption. The commissioner[~~executive director~~] may exempt from the application of this administrative regulation any domestic property and casualty insurer which:

(1) Writes direct business only in this state;

(2) Writes direct annual premiums of $2,000,000 or less; and

(3) Assumes no reinsurance in excess of five (5) percent of direct premium written.

Section 10. Foreign Insurers. (1) Any foreign insurer shall, upon the written request of the commissioner[~~executive director~~], submit to the commissioner[~~executive director~~] an RBC report for the calendar year just ended.

(2) The RBC report of a foreign insurer shall be filed as follows:

(a) On the date an RBC report would be required to be filed by a domestic insurer under this administrative regulation; or

(b) Fifteen (15) days after the request is received by the foreign insurer.

(3) Any foreign insurer shall, at the written request of the commissioner[~~executive director~~], promptly submit to the commissioner[~~executive director~~] a copy of any RBC plan that is filed with the insurance commissioner[~~executive director~~] of any other state.

(4) The commissioner[~~executive director~~] may require a foreign insurer to file an RBC plan if:

(a) A company action level event, regulatory action level event, or authorized control level event exists as determined by:

1. RBC law applicable in the insurer's state of domicile; or

2. This administrative regulation; and

(b) If the insurance commissioner[~~executive director~~] of the insurer's state of domicile fails to require the foreign insurer to file an RBC.

(5) In the event that the commissioner[~~executive director~~] requires the foreign insurer to file an RBC plan pursuant to subsection (4) of this section, the failure of the foreign insurer to file an RBC Plan with the commissioner[~~executive director~~] shall be grounds to order the insurer to cease and desist from writing new insurance business in this state.

(6) In the event of a mandatory control level event with respect to any foreign insurer, if no domiciliary receiver has been appointed with respect to the foreign insurer under the rehabilitation and liquidation statute applicable in the state of domicile of the foreign insurer:

(a) The commissioner[~~executive director~~] may make application to the Franklin Circuit Court permitted under KRS Chapter 304, Subtitle 33 with respect to the liquidation of property of foreign insurers found in this state; and

(b) The occurrence of the mandatory control level event shall be considered adequate grounds for the application.

Section 11. Notices. (1) All notices by the commissioner[~~executive director~~] to an insurer which may result in regulatory action pursuant to this administrative regulation shall be effective upon dispatch if transmitted by registered or certified mail; or

(2) In the case of any other transmission shall be effective upon the insurer's receipt of the notice.

Section 12. Incorporation by Reference. (1) The following material is incorporated by reference:

(a) "Risk-Based Capital Forecasting & Instructions, Life" (2010)[~~1996 NAIC Life Risk-Based Capital Report including Overview and Instructions for Companies (December 31, 1996)~~]; and

(b) "Risk-Based Capital Forecasting & Instructions, Property/Casualty" (2010); and

(c) "Risk-Based Capital Forecasting & Instructions, Fraternal" (2010).[~~(1996 NAIC Property and Casualty Risk-Based Capital Report including Overview and Instructions for Companies (December 31, 1996).~~]

(2) This material may be inspected, copied, or obtained, subject to applicable copyright law, at the Kentucky Department[~~Office~~] of Insurance, 215 West Main Street, Frankfort, Kentucky 40601, Monday through Friday, 8 a.m. to 4:30 p.m.

SHARON P. CLARK, Commissioner

For ROBERT D. VANCE, Secretary

APPROVED BY AGENCY: October 13, 2011

FILED WITH LRC: October 13, 2011 at 4 p.m.

PUBLIC HEARING AND PUBLIC COMMENT PERIOD:A public hearing on this administrative regulation shall be held on November 30, 2011 at 9:00 am, (ET) at the Kentucky Department of Insurance, 215 West Main Street, Frankfort, Kentucky 40601. Individuals interested in being heard at this hearing shall notify this agency in writing, five workdays prior to the hearing, of their intent to attend. If no notification of intent to attend the hearing is received by that date, the hearing may be cancelled. This hearing is open to the public. Any person who wishes to be heard will be given an opportunity to comment on the proposed administrative regulation. A transcript of the public hearing will not be made unless a written request for a transcript is made. If you do not wish to be heard at the public hearing, you may submit written comments on the proposed administrative regulation. Written comments shall be accepted until November 30, 2011. Send written notification of intent to be heard at the public hearing or written comments on the proposed administrative regulation to the contact person.

CONTACT PERSON: DJ Wasson, Staff Assistant, Kentucky Department of Insurance, P. O. Box 517, Frankfort, Kentucky 40602, phone (502) 564-0888, fax (502) 564-1453.

REGULATORY IMPACT ANALYSIS AND TIERING STATEMENT

Contact Person: DJ Wasson

(1) Provide a brief summary of:

(a) What this administrative regulation does: This administrative regulation establishes risk-based capital requirements for all insurers authorized to transact insurance business in Kentucky. This regulation also sets forth the required actions to be taken by both the commissioner and the insurer if the insurer fails to meet the risk-based capital requirements.

(b) The necessity of this administrative regulation: This administrative regulation is necessary to provide the department with the appropriate monitoring and enforcement tools to ensure the financial solvency of insurers doing business in Kentucky.

(c) How this administrative regulation conforms to the content of the authorizing statutes: KRS 304.2-110 provides that the Commissioner of Insurance may make reasonable administrative regulations necessary for or as an aid to the effectuation of any provision of the Kentucky Insurance Code, KRS 304.1-010. KRS 304.3-125 provides that the commissioner may adopt administrative regulations addressing requirements for additional capital and surplus based on the kind, type, volume and nature of insurance business transacted up to the standards prescribed by the National Association of Insurance Commissioners. This administrative regulation includes the requirements for additional capital and surplus in accordance with the risk-based capital requirements adopted by all accredited states.

(d) How this administrative regulation currently assists or will assist in the effective administration of the statutes: This administrative regulation sets forth the process that the department will use in monitoring solvency and the required corrective action for an insurer that does not meet the risk-based capital requirements.

(2) If this is an amendment to an existing administrative regulation, provide a brief summary of:

(a) How the amendment will change this existing administrative regulation: This amendment clearly subjects industrial captive insurers to the risk-based capital requirements, updates the risk-based capital instructions incorporated by reference, corrects agency names and amends various provisions to comply with the requirements of KRS Chapter 13A.

(b) The necessity of the amendment to this administrative regulation: This amendment is primarily necessary to comply with financial accreditation requirements which require industrial insured captive insurers to be subject to risk-based capital requirements and to update the risk-based capital instructions incorporated by reference.

(c) How the amendment conforms to the content of the authorizing statutes: KRS 304.2-110 provides that the Commissioner of Insurance may make reasonable administrative regulations necessary for or as an aid to the effectuation of any provision of the Kentucky Insurance Code, KRS 304.1-010. KRS 304.3-125 provides that the commissioner may adopt administrative regulations addressing requirements for additional capital and surplus based on the kind, type, volume and nature of insurance business transacted up to the standards prescribed by the National Association of Insurance Commissioners. This amendment includes the requirements for additional capital and surplus in accordance with the risk-based capital requirements adopted by all accredited states.

(d) How the amendment will assist in the effective administration of the statutes: This amendment sets forth the process that the department will use in monitoring solvency of industrial insured captive insurers and the required corrective action for an industrial insured captive insurer that does not meet the risk-based capital requirements.

(3) List the type and number of individuals, businesses, organizations, or state and local governments affected by this administrative regulation: Approximately 1,820 regulated entities will be impacted by this administrative regulation.

(4) Provide an assessment of how the above group or groups

will be impacted by either the implementation of this administrative regulation, if new, or by the change, if it is an amendment, including:

(a) List the actions that each of the regulated entities identified in question (3) will have to take to comply with this administrative regulation or amendment: Regulated entities are responsible for maintaining capital and surplus in accordance with the requirements set forth in this administrative regulation. Should a regulated entity fail to maintain the capital and surplus required by this administrative regulation, the entity is responsible for following the corrective action set forth in this administrative regulation.

(b) In complying with this administrative regulation or amendment, how much will it cost each of the entities identified in question (3): Regulated entities have been complying with these requirements for numerous years. There should not be a cost for complying with the updates included in this amendment.

(c) As a result of compliance, what benefits will accrue to the entities identified in question (3): As a result of compliance, regulated entities will be able to fulfill their financial obligations to their insureds.

(5) Provide an estimate of how much it will cost to implement this regulation:

(a) Initially: There will not be an additional cost to implement this administrative regulation initially. The Department has existing staff to perform this function.

(b) On a continuing basis: There will not be a cost to implement this administrative regulation on a continuing basis.

(6) What is the source of funding to be used for the implementation and enforcement of this administrative regulation: The budget of the Department of Insurance.

(7) Provide an assessment of whether an increase in fees or funding will be necessary to implement this administrative regulation, if new, or by the change, if it is an amendment: An increase in fees will not be necessary to implement this administrative regulation.

(8) State whether or not this administrative regulation establishes any fees or directly or indirectly increases any fees: This administrative regulation does not establish any new fees nor does it directly or indirectly increase fees.

(9) TIERING: Is tiering applied? Tiering is not applied as the provisions of this administrative regulation apply to all insurers equally.

FISCAL NOTE ON STATE OR LOCAL GOVERNMENT

1. Does this administrative regulation relate to any program, service, or requirements of a state or local government (including cities, counties, fire departments, or school districts)? Yes

2. What units, parts or divisions of state or local government (including cities, counties, fire departments, or school districts) will be impacted by this administrative regulation? The Department of Insurance will be impacted by this administrative regulation.

3. Identify each state or federal statute or federal regulation that requires or authorizes the action taken by the administrative regulation. KRS 304.2-110, 304.3-125

4. Estimate the effect of this administrative regulation on the expenditures and revenues of a state or local government agency (including cities, counties, fire departments, or school districts) for the first full year the administrative regulation is to be in effect.

(a) How much revenue will this administrative regulation generate for the state or local government (including cities, counties, fire departments, or school districts) for the first year? This administrative regulation will not generate revenue for the Department of Insurance in the first year.

(b) How much revenue will this administrative regulation generate for the state or local government (including cities, counties, fire departments, or school districts) for subsequent years? This administrative regulation will not generate revenue for the Department of Insurance in subsequent years.

(c) How much will it cost to administer this program for the first year? This regulation will be revenue neutral. There will not be an additional cost to administer this program in the first year. Existing staff at the Department of Insurance currently perform this function.

(d) How much will it cost to administer this program for subsequent years? There will not be an additional cost to administer this program in subsequent years.

Note: If specific dollar estimates cannot be determined, provide a brief narrative to explain the fiscal impact of the administrative regulation.

Revenues (+/-):

Expenditures (+/-):

Other Explanation: The amendment to this existing administrative regulation offers technical clarifications and will not have a revenue impact.

CABINET FOR HEALTH AND FAMILY SERVICES
Department for Medicaid Services
Division of Administration and Financial Management
(Amendment)

907 KAR 1:018. Reimbursement for drugs.

RELATES TO: KRS 205.560, 205.561, 205.5631, 205.5632, 205.5634, 205.5636, 205.5638, 205.5639, 205.6316(4), 217.015, 311.550, 311.560, 42 C.F.R. 440.120, 447.331, 447.332, 447.333, 42 U.S.C. 256b, 1396a-d

STATUTORY AUTHORITY: KRS 194A.030(2), 194A.050(1), 205.520(3), 205.560, 205.561(2), 205.6316(4), 42 U.S.C. 1396a(a)(30), 42 U.S.C. 1396r-8[~~, 2005 Ky. Acts ch. 99~~]

NECESSITY, FUNCTION, AND CONFORMITY: [~~2005 Ky. Acts ch. 99 reorganized the Cabinet for Health Services and placed the Department for Medicaid Services and the Medicaid Program under the Cabinet for Health and Family Services.~~] The Cabinet for Health and Family Services, Department for Medicaid Services has responsibility to administer the Medicaid Program. KRS 205.520(3) authorizes the cabinet, by administrative regulation, to comply with any requirement that may be imposed or opportunity presented by federal law to qualify for federal Medicaid funds[~~for the provision of medical assistance to Kentucky's indigent citizenry~~]. KRS 205.561(2) and 205.6316(4) require the department to promulgate an administrative regulation to establish a dispensing fee for prescriptions. This administrative regulation establishes the Medicaid program reimbursement policies for drugs dispensed to Medicaid recipients who are not enrolled with a managed care organization[~~method for determining reimbursement for drugs through the Medicaid Outpatient Pharmacy Program and the dispensing fees~~].

Section 1. Definitions. (1) "A-rated generic product" means a product that the FDA has found to be bioequivalent.

(2)[~~"Average wholesale price" or "AWP" means the average wholesale price published in a nationally recognized comprehensive drug data file for which the department has contracted.~~

~~(3)~~] "Department" means the Department for Medicaid Services or its designated agent.

(3)[~~(4)~~] "Direct price" means the estimated acquisition cost for which a retailer can purchase a drug product directly from the manufacturer as listed in a nationally-recognized comprehensive drug data file for which the department has contracted.

(4)[~~(5)~~] "Dispensing fee" means a professional fee paid to reimburse a pharmacy for costs associated with the dispensing of a prescribed drug.

(5) "Federal financial participation" is defined by 42 C.F.R. 400.203.

(6) "Federal upper limit" or "FUL" means the maximum federal financial participation
available toward reimbursement for a given drug dispensed to a Medicaid recipient.

(7)[~~(6)~~] "Food and Drug Administration" or "FDA" means the Food and Drug Administration of the United States Department of Health and Human Services.

(8) "State maximum allowable cost" means the maximum amount established by the department that the department shall reimburse for a drug.

(9)[~~(7)~~] "Weighted majority of volume purchase" means a calculation used in determining a state maximum allowable cost or

MAC that is based on market share.

(10)[~~(8)~~] "Wholesale acquisition cost" or "WAC" means the estimated acquisition cost for the wholesaler as listed in a nationally-recognized comprehensive drug data file for which the department has contracted.

Section 2. Reimbursement. (1) Drug copayment requirements and provisions shall be as established in 907 KAR 1:604.

(2) The department:

(a) May establish a state maximum allowable[~~maximum-allowable~~] cost for a drug:

1. If two (2) or more A-rated therapeutically-equivalent, multisource, noninnovator drugs with a significant cost difference exist for the given drug; and

2. By reviewing the pricing sources WAC[~~AWP, WAC,~~] and direct price for the drug as identified in a nationally-recognized comprehensive drug data file for which the department has contracted and utilizing the weighted majority of volume purchased. [~~For example, if for a given drug there are two (2) therapeutically-equivalent drugs with one (1) priced at five (5) dollars per pill and possessing thirty (30) percent of the market share and the other priced at one (1) dollar per pill and possessing seventy (70) percent of the market share, the department shall factor in the market share in determining the state MAC price rather than simply averaging the two (2) prices~~]; and

(b) Shall maintain a current listing of drugs and their corresponding state maximum allowable [~~maximum-allowable~~] costs via a link from the department web site located at the following address: http://www.chfs.ky.gov/dms.

(3) An appeal of a state maximum allowable[~~maximum-allowable~~] cost price for a drug shall be as follows:

(a)[~~1.~~] The provider shall email or fax a completed Kentucky Medicaid MAC Price Research Request Form (which is available at the department's website which is http://www.chfs.ky.gov/dms) to Magellan Medicaid Administration in accordance with the instructions on the form.[~~"MAC Price Inquiries and Research Request Form" (which is available at the department and at the Web site address: http://kentucky.fhsc.com/providers/documents.asp, by clicking on "MAC Price Inquires and Research Request Form or via the specific Web site address: http://kentuckyfhsc.com/Downloads/providers/KYRx_MACResearchRequestForm.pdf) to First Health Services Corporation. The email address is rebate@fhsc.com and the fax number is 804-217-7911; or~~

~~2. The provider shall contact the First Health Services Corporation technical call center at 1-800-432-7005 and provide information regarding the appeal including the national drug code for the drug in question;~~]

(b) An appeal of a state maximum allowable[~~maximum-allowable~~] cost price for a drug shall be investigated and resolved within three (3) business days;

(c) If available, the provider shall be supplied with the name of one (1) or more manufacturers who have a price comparable to the state maximum allowable[~~maximum-allowable~~] cost price;

(d) The state maximum allowable[~~maximum-allowable~~] cost price and effective date of that price shall be adjusted accordingly, retroactive to the date of service for the state maximum allowable[~~maximum-allowable~~] cost price prescription in question, if:

1. It is determined that no manufacturer exists in the price range referenced in paragraph (c) of this subsection; or

2. The provider is able to document that despite reasonable efforts to obtain access, he or she does not have access to the one (1) or more manufacturers supplied to the provider; and

(e) When the change in state maximum allowable[~~maximum-allowable~~] cost price for a price that is adjusted becomes effective, the provider shall be informed that the claim may be rebilled for the price adjustment.

(4) Reimbursement to a pharmacy participating in the Medicaid Program for a drug listed in the Kentucky Medicaid Outpatient Drug List established in 907 KAR 1:019 and provided to an eligible recipient shall be determined in accordance with the requirements established in this subsection.

(a) An appropriate rebate agreement shall be signed by the drug manufacturer or the drug shall be provided based on a prior authorized exemption from the rebate requirement in accordance with 907 KAR 1:019.

(b) Drug costs shall be determined in the Pharmacy Program using drug pricing and coding information obtained from a nationally-recognized comprehensive drug data file for which the department has contracted with pricing based on the actual package size utilized.

(c) Reimbursement for a drug shall be the lesser of:

1. The federal upper limit, if one (1) exists, plus a dispensing fee and, if applicable, a unit dose addition;

2. The state maximum allowable[~~maximum-allowable~~] cost, if one (1) exists, plus a dispensing fee and, if applicable, a unit dose addition;

3. The estimated acquisition cost (EAC) which shall:

a. For a generic drug, equal the WAC plus 3.2 [~~AWP minus fourteen (14)~~] percent, plus a dispensing fee and, if applicable, a unit dose addition; and

b. For a brand name drug, equal the WAC plus two (2)[~~AWP minus fifteen (15)~~] percent, plus a dispensing fee and, if applicable, a unit dose addition;

4. The usual and customary billed charge.

(d) Reimbursement for the dispensing of an emergency supply of a drug shall be:

1. Made only outside normal business hours of the department's Drug Prior Authorization office and as permitted in accordance with 907 KAR 1:019, Section 4; and

2. The lesser of:

a. The federal upper limit, if one (1) exists, plus the dispensing fee for the prescription and, if applicable, a unit dose addition;

b. The state maximum allowable[~~maximum-allowable~~] cost, if one (1) exists, plus a dispensing fee and, if applicable, a unit dose addition;

c. The estimated acquisition cost (EAC), which shall:

(i) For a generic drug, equal the WAC plus 3.2 [~~AWP minus fourteen (14)~~] percent, plus a dispensing fee and, if applicable, a unit dose addition; and

(ii) For a brand name drug, equal the WAC plus two (2)[~~AWP minus fifteen (15)~~] percent, plus a dispensing fee and, if applicable, a unit dose addition;

d. The usual and customary billed charge.

(e) If the dispensing of an emergency supply results in partial filling of the quantity or amount prescribed, reimbursement for the partial filling of the remainder of the prescription shall utilize the methodology specified in paragraph (c) of this subsection, except that only one (1) dispensing fee shall be allowed for the combined partial fill and subsequent completion fill.

(f) Reimbursement shall be denied if:

1. The recipient is ineligible on the date of service;

2. The drug is excluded from coverage in accordance with 907 KAR 1:019, Section 3; or

3. Prior authorization is required by the department and has not been granted prior to dispensing of the drug[~~has been denied or has not been requested~~].

(g) For a nursing facility resident meeting Medicaid nursing facility level of care criteria in accordance with 907 KAR 1:022, there shall not be more than one (1) dispensing fee allowed per provider per recipient per drug within a rolling twenty-four (24) day period unless[~~:~~

1. The drug is a Schedule II, III, or IV controlled substance or a legend intravenous drug, in which case up to three (3) additional dispensing fees shall be allowed;

2. The drug is a nonsolid dosage form, in which case one (1) additional dispensing fee shall be allowed;

3. the prescribed dosage has been changed, in which case one (1) additional dispensing fee shall be allowed; or

4. The department determines that it is in the best interest of the recipient to allow the additional dispensing fee.

(h) For a nursing facility resident meeting Medicaid nursing facility level of care criteria and if appropriate and in accordance with 201 KAR 2:190 and 902 KAR 55:065, an unused drug, paid for by Medicaid, shall be returned to the originating pharmacy and the department shall be credited for the cost of the drug and the unit dose packaging cost.

(i)1. A maintenance drug shall be dispensed in accordance

with 907 KAR 1:019.

2. The department shall not reimburse for a refill of a maintenance drug prior to the end of the dispensing period established in 907 KAR 1:019[~~to an outpatient service recipient, except for an individual receiving supports for community living services, up to a ninety-two (92) day supply with only one (1) initial dispensing fee and one (1) refill dispensing fee allowed within the ninety-two (92) day time period~~ unless the department determines that it is in the best interest of the recipient to allow any additional dispensations or dispensing fees; and

3.[~~2.~~] For an outpatient service recipient receiving services via the Supports for Community Living Program, there shall not be more than:

a. One (1) dispensing fee allowed per drug per calendar month for a drug classified by the Medicaid Program as a maintenance drug unless there is an exception described in clause c of this subparagraph;

b. Four (4) dispensing fees allowed per drug within a calendar month for a legend intravenous drug or a Schedule II, III or IV controlled substance; or

c.(i) Two (2) dispensing fees allowed per drug within a calendar month for a drug that is a nonsolid dosage form; or

(ii) Four (4) dispensing fees allowed per maintenance drug in one (1) month if a prescriber requests to prescribe less than a thirty (30) day supply based on medical specialty, best practice standards, and appropriateness of care.

(j) For a personal care recipient, there shall not be more than:

1. One (1) dispensing fee allowed per drug per calendar month for a drug classified by the Medicaid Program as a maintenance drug unless there is an exception described in subparagraph 3 of this paragraph;

2. Four (4) dispensing fees allowed per drug within a calendar month for a legend intravenous drug or a Schedule II, III or IV controlled substance; or

3.a. Two (2) dispensing fees allowed per drug within a calendar month for a drug that is a nonsolid dosage form; or

b. Four (4) dispensing fees allowed per maintenance drug in one (1) month if a prescriber requests to prescribe less than a thirty (30) day supply based on medical specialty, best practice standards, and appropriateness of care.

(k) Reimbursement shall not be made for more than one (1) prescription to the same recipient on the same day for a drug with the same:

1. National Drug Code (NDC); or

2. Generic name, strength, and dosage form.

(5) For a Medicaid recipient participating in a hospice program, payment for a drug shall be in accordance with 907 KAR 1:340.

(6) A pharmacy claim shall meet the point of sale (POS) requirements for services in accordance with 907 KAR 1:673.

(7) If a payment is made for a drug for which there is no authorization as required in accordance with 907 KAR 1:019, the provider shall reimburse the department the amount of the payment.

(8) A timely claim payment shall be processed in accordance with 42 C.F.R. 447.45.

(9) A claim in which retroactive eligibility is established shall be submitted up to twelve (12) months from the issue date noted on the Medicaid recipient's medical assistance identification card. If the date of service is greater than twelve (12) months old, the claim shall be submitted as a paper claim with a copy of the retroactive medical assistance identification card attached.

(10) Pursuant to KRS 205.622, prior to billing the department, a provider shall submit a bill to a third party payer[~~Medicare~~] if the provider has knowledge that the third party payer [~~Medicare~~] may be liable for payment.

(11)(a) If a provider is aware that a Medicaid recipient has additional insurance or if a recipient's[~~(11)(a) If the~~] medical assistance identification card indicates that the Medicaid recipient has additional insurance, the provider shall submit a bill to the third party in accordance with KRS 205.622.

(b) A provider who is aware that a recipient has other insurance, but no insurance is indicated on the medical assistance identification card, shall notify the department's fiscal agent of the third-party liability.

(12) Adherence to the requirements established in this section shall be monitored through an on-site audit, postpayment review of the claim, a computer audit or an edit of the claim.

(13)(a) A pharmacy of a covered entity as defined in 42 U.S.C. 256b which purchases drugs through the United States Public Health Service Discount Program in accordance with 42 U.S.C. 256b shall bill the department the pharmacy's actual 340B acquisition cost for all drugs[~~a drug~~]; and

(b) The department shall reimburse the pharmacy's actual 340B acquisition cost for the drug plus a dispensing fee in accordance with Section 3 of this administrative regulation.

(14) If a covered entity as defined in 42 U.S.C. 256b notifies the United States Office of Pharmacy Affairs that its pharmacy is not included under 42 U.S.C. 256b:

(a) The pharmacy shall submit its usual and customary amount for a drug; and

(b) The department shall reimburse for a drug in accordance with this section plus a dispensing fee in accordance with Section 3 of this administrative regulation.

Section 3. Dispensing Fees. (1) To determine a dispensing fee, the department shall comply with KRS 205.561.

(2) Except as provided in subsection (3) of this section and in accordance with KRS 205.561, the dispensing fee, unless excluded by Section 2(4)(d) of this administrative regulation, shall be:

(a) Five (5) dollars per prescription for a generic drug reimbursed through the Outpatient Drug Program if dispensed to an eligible recipient, including an eligible recipient in a nursing facility meeting the nursing facility level of care criteria requirements established in 907 KAR 1:022; and

(b) Four (4) dollars and fifty (50) cents per prescription for a brand name drug reimbursed through the outpatient drug program if dispensed to an eligible recipient, including an eligible recipient in a nursing facility meeting the nursing facility level of care criteria requirements established in 907 KAR 1:022.

(3)(a) For a recipient in a nursing facility meeting the nursing facility level of care criteria requirements established in 907 KAR 1:022, a unit dose addition to the usual reimbursement shall be made for a drug dispensed through the Pharmacy Outpatient Drug Program in the amount of two (2) cents per unit dose for a nonunit dose drug repackaged in unit dose form by the pharmacist.

(b) The unit dose addition shall be paid, as appropriate, even though the usual dispensing fee of five (5) dollars for a generic drug or four (4) dollars and fifty (50) cents for a brand name drug is not paid due to monthly limits on dispensing fees or in accordance with Section 2(4)(d) of this administrative regulation.

Section 4. Reimbursement to Dispensing Physicians. A participating dispensing physician who practices in a county where a pharmacy is not located shall be reimbursed for the cost of the drug, with the cost computed:

(1) As the lesser of:

(a) The maximum-allowable cost or estimated acquisition cost established in Section 2(4) of this administrative regulation;

(b) The physician's usual and customary amount; or

(c) The federal upper limit; or

(2) In accordance with 907 KAR 3:010 for a free immunization through the Vaccines for Children Program.

Section 5. Incorporation by Reference. (1) The "Kentucky Medicaid MAC Price[~~MAC Price Inquiries and~~] Research Request Form", June 18, 2010[~~December 2004~~] edition, is incorporated by reference.

(2) This material may be inspected, copied, or obtained, subject to applicable copyright law, at the Department for Medicaid Services, 275 East Main Street, Frankfort, Kentucky 40621, Monday through Friday, 8 a.m. to 4:30 p.m.

NEVILLE WISE, Acting Commissioner
JANIE MILLER, Secretary

APPROVED BY AGENCY: September 28, 2011

FILED WITH LRC: October 3, 2011 at 10 a.m.

PUBLIC HEARING AND PUBLIC COMMENT PERIOD: A public hearing on this administrative regulation shall, if requested, be held on November 21, 2011 at 9:00 a.m. in the Health Services Auditorium, Health Services Building, First Floor, 275 East Main

Street, Frankfort, Kentucky 40621. Individuals interested in attending this hearing shall notify this agency in writing by November 14, 2011, five (5) workdays prior to the hearing, of their intent to attend. If no notification of intent to attend the hearing is received by that date, the hearing may be canceled. The hearing is open to the public. Any person who attends will be given an opportunity to comment on the proposed administrative regulation. A transcript of the public hearing will not be made unless a written request for a transcript is made. If you do not wish to attend the public hearing, you may submit written comments on the proposed administrative regulation. You may submit written comments regarding this proposed administrative regulation until close of business November 30, 2011. Send written notification of intent to attend the public hearing or written comments on the proposed administrative regulation to:

CONTACT PERSON: Jill Brown, Office of Legal Services, 275 East Main Street 5 W-B, Frankfort, Kentucky 40601, phone (502) 564-7905, fax (502) 564-7573.

REGULATORY IMPACT ANALYSIS AND TIERING STATEMENT

Contact Person: Trista Chapman or Stuart Owen

(1) Provide a brief summary of:

(a) What this administrative regulation does: This administrative regulation establishes the Medicaid program reimbursement policies for drugs dispensed to Medicaid recipients who are not enrolled with a managed care organization.

(b) The necessity of this administrative regulation: This administrative regulation is necessary to establish the Medicaid program reimbursement policies for drugs dispensed to Medicaid recipients who are not enrolled with a managed care organization.

(c) How this administrative regulation conforms to the content of the authorizing statutes: This administrative regulation conforms to the content of the authorizing statutes by establishing the Medicaid program reimbursement policies for drugs dispensed to Medicaid recipients who are not enrolled with a managed care organization.

(d) How this administrative regulation currently assists or will assist in the effective administration of the statutes: This administrative regulation will assist in the effective administration of the authorizing statutes by establishing the Medicaid program reimbursement policies for drugs dispensed to Medicaid recipients who are not enrolled with a managed care organization.

(2) If this is an amendment to an existing administrative regulation, provide a brief summary of:

(a) How the amendment will change this existing administrative regulation: The amendment eliminates average wholesale price (AWP) as a drug pricing component and replaces it with wholesale acquisition cost (WAC.) Wholesale acquisition cost is the list price on drugs for wholesalers and others prior to any rebates or discounts on the drugs.

(b) The necessity of the amendment to this administrative regulation: The amendment regarding average wholesale price (AWP) is necessary as AWP will no longer be published by First Databank, Inc. after September 26, 2011. The unavailability of AWP stems in part from the resolution of a civil court case - New England Carpenters Health Benefits Fund, et al. v. First Databank, Inc. – in which First Databank, Inc., was found to have incorrectly stated the AWP of drugs compared to the actual market price for drugs. First Databank Inc., publishes pharmaceutical industry market information including drug pricing surveys of a drug wholesaler to determine benchmarks for what drug wholesalers charges drug retailers. Insurers and Medicaid programs use First Databank Inc.'s pricing information in order to establish reimbursement to pharmacies or other providers.

(c) How the amendment conforms to the content of the authorizing statutes: The amendment conforms to the content of the authorizing statutes by replacing a drug pricing component that will no longer be published with one that will continue to be published. The drug pricing component is utilized to established Medicaid outpatient pharmacy program reimbursement.

(d) How the amendment will assist in the effective administration of the statutes: The amendment will assist in the effective administration of the authorizing statutes by replacing a drug pricing component that will no longer be published with one that will continue to be published. The drug pricing component is utilized to established Medicaid outpatient pharmacy program reimbursement.

(3) List the type and number of individuals, businesses, organizations, or state and local government affected by this administrative regulation: Pharmacies who dispense drugs to Medicaid recipients who are not enrolled with a managed care organization will be affected by this administrative regulation. Currently, there are over 1,100 pharmacies in Kentucky participating in the Medicaid program.

(4) Provide an analysis of how the entities identified in question (3) will be impacted by either the implementation of this administrative regulation, if new, or by the change, if it is an amendment, including:

(a) List the actions that each of the regulated entities identified in question (3) will have to take to comply with this administrative regulation or amendment: Pharmacies will not have to take any action. The amendment alters a drug pricing component utilized by the Department for Medicaid Services in establishing drug reimbursement but requires no action by pharmacies.

(b) In complying with this administrative regulation or amendment, how much will it cost each of the entities identified in question (3). No cost is imposed.

(c) As a result of compliance, what benefits will accrue to the entities identified in question (3). No action is required of pharmacies.

(5) Provide an estimate of how much it will cost to implement this administrative regulation:

(a) Initially: The Department for Medicaid Services (DMS) estimates that changing the drug pricing component will be budget neutral.

(b) Ongoing: DMS estimates that changing the drug pricing component will be budget neutral.

(6) What is the source of the funding to be used for the implementation and enforcement of this administrative regulation: The sources of revenue to be used for implementation and enforcement of this administrative regulation are federal funds authorized under Title XIX of the Social Security Act and state matching funds of general fund appropriations.

(7) Provide an assessment of whether an increase in fees or funding will be necessary to implement this administrative regulation, if new, or by the change if it is an amendment: Neither an increase in fees nor funding is necessary.

(8) State whether or not this administrative regulation establishes any fees or directly or indirectly increases any fees: This administrative regulation neither establishes nor directly nor indirectly increases any fee.

(9) Tiering: Is tiering applied? Tiering is applied in the sense that the dispensing fee for generic drugs is higher than the dispensing fee for brand name drugs in order to promote the dispensing of generic drugs.

FEDERAL MANDATE ANALYSIS COMPARISON

1. Federal statute or regulation constituting the federal mandate. 42 U.S.C. 1396a(a)(30), 42 C.F.R. 447.204 and 42 U.S.C. 1396r-8.

2. State compliance standards. KRS 205.520(3) states, "Further, it is the policy of the Commonwealth to take advantage of all federal funds that may be available for medical assistance. To qualify for federal funds the secretary for health and family services may by regulation comply with any requirement that may be imposed or opportunity that may be presented by federal law. Nothing in KRS 205.510 to 205.630 is intended to limit the secretary's power in this respect."

3. Minimum or uniform standards contained in the federal mandate. Medicaid reimbursement rates must be consistent with efficiency, economy, and quality of care and sufficient to enlist enough providers so that care and services are available at least to the extent that such care and services are available to the general population in the same geographic area. Medicaid reimbursement for many covered outpatient drugs is subject to federal upper limits. A formula for calculating limits is established in federal law. Drug

manufacturers must have an agreement to pay rebates to the state Medicaid program as a condition of receiving reimbursement. The rebate formula is also established in federal law. Both drug manufacturers and state Medicaid programs are required to report drug utilization and drug prices paid to the Centers for Medicare and Medicaid Services.

4. Will this administrative regulation impose stricter requirements, or additional or different responsibilities or requirements, than those required by the federal mandate? The amendment does not impose stricter, additional or different requirements than those required by the federal mandate.

5. Justification for the imposition of the stricter standard, or additional or different responsibilities or requirements. Stricter requirements are not imposed, a managed care model is not federally mandated for Medicaid programs.

FISCAL NOTE ON STATE OR LOCAL GOVERNMENT

1. Does this administrative regulation relate to any program, service, or requirements of a state or local government (including cities, counties, fire departments or school districts)? Yes

2. What units, parts or divisions of state or local government (including cities, counties, fire departments, or school districts) will be impacted by this administrative regulation? The Department for Medicaid Services will be affected by this administrative regulation.

3. Identify each state or federal regulation that requires or authorizes the action taken by the administrative regulation. This administrative regulation and 42 C.F.R. 447.204 authorize the action taken by this administrative regulation.

4. Estimate the effect of this administrative regulation on the expenditures and revenues of a state or local government agency (including cities, counties, fire departments, or school districts) for the first full year the administrative regulation is to be in effect.

(a) How much revenue will this administrative regulation generate for the state or local government (including cities, counties, fire departments, or school districts) for the first year? None.

(b) How much revenue will this administrative regulation generate for the state or local government (including cities, counties, fire departments, or school districts) for subsequent years? None.

(c) How much will it cost to administer this program for the first year? DMS estimates that changing the drug pricing component will be budget neutral.

(d) How much will it cost to administer this program for subsequent years? DMS estimates that changing the drug pricing component will be budget neutral.

Note: If specific dollar estimates cannot be determined, provide a brief narrative to explain the fiscal impact of the administrative regulation.

Revenues (+/-)

Expenditures (+/-)

Other Explanation:

CABINET FOR HEALTH AND FAMILY SERVICES
Department for Community Based Services
Division of Family Support
(Amendment)

921 KAR 3:030. Application process.

RELATES TO: KRS 116.048, 7 C.F.R. 273.2, 273.10, 42 U.S.C. 1973gg-5, 7 U.S.C. 2020(e)(2)(B)(ii), (iii), (iv), 42 U.S.C. 2000d, Pres. EO 13166

STATUTORY AUTHORITY: KRS 116.048(1), 194A.050(1), 7 C.F.R. 271.4, 7 U.S.C. 2020(e)(2)(B), 7 U.S.C. 2011-2029, 42 U.S.C. 1973gg-5

NECESSITY, FUNCTION, AND CONFORMITY: KRS 194A.050(1) requires the secretary of the Cabinet for Health and Family Services to promulgate administrative regulations necessary to implement programs mandated by federal law or to qualify for the receipt of federal funds and necessary to cooperate with other state and federal agencies for the proper administration of the cabinet and its programs. 7 U.S.C. 2011 to 2029 and 7 C.F.R. 271.4 authorize the cabinet to administer a Supplemental Nutrition Assistance Program (SNAP) [~~Food Stamp Program~~] and prescribes the manner in which the program shall be implemented. 7 U.S.C. 2020(e)(2)(B) requires the cabinet to develop a uniform application process. KRS 116.048(1) designates the cabinet as a voter registration agency in accordance with 42 U.S.C. 1973gg-5. This administrative regulation establishes the application and the voter registration processes used by the cabinet in the administration of the SNAP [~~Food Stamp Program~~].

Section 1. Right to Apply or Reapply. (1) An individual shall have the right to apply or reapply for SNAP [~~food stamp~~] benefits on the same day that the household first contacts the Department for Community Based Services (DCBS) office in person during office hours.

(2) The cabinet shall make the application process readily accessible to a household.

(3) In accordance with the procedures described in 920 KAR 1:070, interpreter services shall be provided for a person who is:

(a) Deaf; or

(b) Hard of hearing.

(4) In accordance with 42 U.S.C. 2000d and Presidential EO 13166, interpreter services shall be provided for a person who is Limited English Proficient.

(5) An application shall be considered filed if:

(a) A FS-1, Application for SNAP, containing the name, address, and signature of the applicant is received by a DCBS office; or

(b) Application for benefits and another public assistance program is made in accordance with 921 KAR 2:040 and Section 6 of this administrative regulation.

(6) An application shall be processed after the:

(a) Applicant or representative is interviewed;

(b) Required information and verification for the application is provided to the DCBS office; and

(c) Application and related documents are received by the DCBS office, as specified in Section 3(1) of this administrative regulation.

Section 2. Who May Sign an Application. An application for SNAP [~~food stamps~~] shall be signed by:

(1) An adult or emancipated child who is a responsible member of the household; or

(2) The household's authorized representative.

Section 3. Where an Application is Filed. (1) Except as provided in subsection (2) of this section, an application shall be filed in any DCBS office.

(2) A concurrent application for Supplemental Security Income (SSI) and SNAP [~~Food Stamps~~] shall be filed in the service area office of the Social Security Administration.

Section 4. Prompt Action on an Application. The cabinet shall provide an eligible household that completes the initial SNAP [~~food stamp~~] application process an opportunity to participate as soon as possible. The cabinet shall not provide an opportunity to participate later than:

(1) Thirty (30) days after the application is filed for a household ineligible for expedited services; or

(2) The fifth calendar day following the date an application is filed for a household eligible for expedited services.

Section 5. Expedited Service. The cabinet shall provide expedited services to a household that is eligible in accordance with 7 C.F.R. 273.2(i).

Section 6. Public Assistance Application Process. (1) A household in which every member is applying for Kentucky Transitional Assistance Program (KTAP) shall be allowed to simultaneously apply for SNAP[~~food stamp~~] benefits. A single interview shall be conducted for both programs.

(2) Time standards specified in Section 4 of this administrative regulation shall not apply to a public assistance application. A public assistance application shall be governed by the time standards specified in 921 KAR 2:035, Section 4.

(3) A household in which every member receives, or is authorized to receive, SSI shall be considered categorically eligible unless:

(a) The entire household is institutionalized;

(b) A household member is ineligible due to a drug-related felony conviction;

(c) A household member is disqualified due to an intentional program violation specified in 921 KAR 3:010; or

(d) The head of the household is disqualified for failure to comply with the work requirements specified in 921 KAR 3:042.

(4) A household in which any member receives, or is authorized to receive cash, in-kind, or other benefits funded under Temporary Assistance for Needy Families Block Grant (TANF) shall be considered categorically eligible unless:

(a) The entire household is institutionalized;

(b) A household member is ineligible due to a drug-related felony conviction;

(c) A household member is disqualified due to an intentional program violation specified in 921 KAR 3:010; or

(d) The head of household is disqualified for failure to comply with the work requirements specified in 921 KAR 3:042.

(5) If verified by the program or service conferring categorical eligibility status, a categorically eligible household shall not be required to verify the following eligibility factors:

(a) Resources;

(b) Gross and net income;

(c) Social Security number;

(d) Sponsored alien information; and

(e) Residency.

Section 7. Joint SSI and SNAP[~~Food Stamp~~] Application Process. A household in which every member is an applicant or recipient of SSI shall be allowed to simultaneously apply for both SSI and SNAP[~~food stamps~~] as specified in Section 3(2) of this administrative regulation.

Section 8. Voter Registration. (1) In accordance with KRS 116.048 and 42 U.S.C. 1973gg-5, a SNAP[~~food stamp~~] applicant or recipient shall be provided the opportunity to complete an application to register to vote or update current voter registration if the applicant or recipient is:

(a) Age eighteen (18) or over; and

(b) Not registered to vote or not registered to vote at his current address.

(2) PAFS-706, Voter Registration Rights and Declination, shall be utilized to document a SNAP[~~Food Stamp Program~~] applicant or recipient's choice to:

(a) Register to vote;

(b) Not register to vote; or

(c) Indicate that they are currently registered to vote.

(3) A voter registration application [~~issued by the Board of Elections~~] shall be completed if a SNAP[~~Food Stamp Program~~] applicant or recipient wants to:

(a) Register to vote; or

(b) Update voter registration to provide a new address.

(4) The voter registration process shall not apply to an individual not included in the assistance application, such as an authorized representative.

(5) All information utilized in the voter registration process shall remain confidential and be used only for voter registration purposes.

(6) The State Board of Elections shall approve the application to register to vote and send a confirmation or denial notice to the voter registration applicant.

Section 9. Incorporation by Reference. (1) The following material is incorporated by reference:

(a) "FS-1, Application for SNAP", edition 2/12[~~8/10~~]; and

(b) "PAFS-706, Voter Registration Rights and Declination", edition 8/10.

(2) This material may be inspected, copied, or obtained, subject to applicable copyright law, at the Department for Community Based Services, 275 East Main Street, Frankfort, Kentucky 40621, Monday through Friday, 8 a.m. to 4:30 p.m.

PATRICIA R. WILSON, Commissioner
JANIE MILLER, Secretary

APPROVED BY AGENCY: October 10, 2011

FILED WITH LRC: October 12, 2011 at noon

PUBLIC HEARING AND PUBLIC COMMENT PERIOD: A public hearing on this administrative regulation shall, if requested, be held on November 21, 2011 at 9:00 a.m. in the Conference Suite C, Health Services Building, First Floor, 275 East Main Street, Frankfort, Kentucky. Individuals interested in attending this hearing shall notify this agency in writing by November 14, 2011, five (5) workdays prior to the hearing, of their intent to attend. If no notification of intent to attend the hearing is received by that date, the hearing may be canceled. The hearing is open to the public. Any person who attends will be given an opportunity to comment on the proposed administrative regulation. A transcript of the public hearing will not be made unless a written request for a transcript is made. If you do not wish to attend the public hearing, you may submit written comments on the proposed administrative regulation. You may submit written comments regarding this proposed administrative regulation until close of business November 30, 2011. Send written notification of intent to attend the public hearing or written comments on the proposed administrative regulation to:

CONTACT PERSON: Jill Brown, Office of Legal Services, 275 East Main Street 5 W-B, Frankfort, Kentucky 40601, phone 502-564-7905, fax 502-564-7573.

REGULATORY IMPACT ANALYSIS AND TIERING STATEMENT

Contact Person: Justin Dearinger

(1) Provide a brief summary of:

(a) What this administrative regulation does: This administrative regulation establishes the application and the voter registration processes used by the cabinet in the administration of the Supplemental Nutrition Assistance Program (SNAP).

(b) The necessity of this administrative regulation: This administrative regulation is necessary to establish uniform application standards for SNAP.

(c) How this administrative regulation conforms to the content of the authorizing statutes: This administrative regulation conforms to the content of the authorizing statutes by establishing an application process for SNAP.

(d) How this administrative regulation currently assists or will assist in the effective administration of the statutes: This administrative regulation assists in the administration of the statues by establishing procedures used by the cabinet in the administration of SNAP.

(2) If this is an amendment to an existing administrative regulation, provide a brief summary of:

(a) How the amendment will change this existing administrative regulation: The amendment to this administrative regulation will revise material incorporated by reference, FS-1, Application for SNAP to comply with federal regulations in regards to obtaining Social Security Numbers (SSNs).

(b) The necessity of the amendment to this administrative regulation: The amendment to this administrative regulation is necessary to comply with federal regulations by conforming with the Tri-Agency Guidance issued by the Food and Nutrition Service (FNS) that stressed that applicants must be informed of the policies regarding their SSN prior to being asked to provide it.

(c) How the amendment conforms to the content of the authorizing statutes: The amendment to this administrative regulation conforms to the authorizing statutes by implementing the requirements of federal regulations.

(d) How the amendment will assist in the effective administration of the statutes: The amendment to this administrative regulation will assist in the effective administration of the statutes through its compliance with federal requirements.

(3) List the type and number of individuals, businesses, organizations, or state and local governments affected by this administrative regulation: Approximately 842,499 individuals in 393,080 households are currently participating in SNAP in Kentucky. All SNAP recipients and potential applicants are affected by this administrative regulation.

(4) Provide an analysis of how the entities identified in question

(3) will be impacted by either the implementation of this administrative regulation, if new, or by the change, if it is an amendment, including:

(a) List the actions that each of the regulated entities identified in question (3) will have to take to comply with this administrative regulation or amendment: This amendment will not require any additional actions on the part of SNAP applicants or recipients.

(b) In complying with this administrative regulation or amendment, how much will it cost each of the entities identified in question (3): This amendment does not involve a cost to a SNAP applicant or recipient.

(c) As a result of compliance, what benefits will accrue to the entities identified in question (3): SNAP applicants and recipients will benefit from the amendment to this administrative regulation by being informed on the first page of the FS-1 that the request to disclose a SSN is voluntary. SNAP applicants and recipients living in group living facilities will benefit from the removal of the reference that residents in these facilities require an authorized representative, by having a choice to either apply on their own behalf or through an authorized representative.

(5) Provide an estimate of how much it will cost the administrative body to implement this administrative regulation:

(a) Initially: No additional funding is required.

(b) On a continuing basis: No additional funding is required.

(6) What is the source of the funding to be used for the implementation and enforcement of this administrative regulation: The source of the funding will be SNAP Federal Funds and matching State funds. The funding has been appropriated in the enacted budget.

(7) Provide an assessment of whether an increase in fees or funding will be necessary to implement this administrative regulation, if new, or by the change if it is an amendment: There are no fees and no increase in funding for this administrative regulation.

(8) State whether or not this administrative regulation established any fees or directly or indirectly increased any fees: This administrative regulation does not establish any fees or directly or indirectly increase any fees.

(9) TIERING: Is tiering applied? Tiering is not applied because this administrative regulation will be applied in a like manner statewide.

FEDERAL MANDATE ANALYSIS COMPARISON

1. Federal statute or regulation constituting the federal mandate.
7 C.F.R. 273.2, 7 U.S.C. 2011-2029, and 42 U.S.C. 1973gg-10.

2. State compliance standards. KRS 116.048, 194A.050(1)

3. Minimum or uniform standards contained in the federal mandate. The provisions of this administrative regulation comply with the Federal mandate.

4. Will this administrative regulation impose stricter requirements, or additional or different responsibilities or requirements, than those required by the federal mandate? The amendment to this administrative regulation will not impose stricter requirements, or additional or different responsibilities or requirements, than those required by the federal mandate.

5. Justification for the imposition of the stricter standard, or additional or different responsibilities or requirements. The justification for the imposition of a stricter standard, or additional or different responsibilities or requirements, is not applicable.

FISCAL NOTE ON STATE OR LOCAL GOVERNMENT

1. Does this administrative regulation relate to any program, service, or requirements of a state or local government (including cities, counties, fire departments, or school districts)? Yes

2. What units, parts or divisions of state or local government (including cities, counties, fire departments, or school districts) will be impacted by this administrative regulation? The Department for Community Based Services will be impacted by this administrative regulation.

3. Identify each state or federal statute or federal regulation that requires or authorizes the action taken by the administrative regulation. KRS 116.048, 194A.050(1), 7 C.F.R. 271.4, 273.2, and U.S.C. 2011-2029.

4. Estimate the effect of this administrative regulation on the expenditures and revenues of a state or local government agency (including cities, counties, fire departments, or school districts) for the first full year the administrative regulation is to be in effect.

(a) How much revenue will this administrative regulation generate for the state or local government (including cities, counties, fire departments, or school districts) for the first year? This administrative regulation does not generate revenue and will not generate any additional revenue during the first year.

(b) How much revenue will this administrative regulation generate for the state or local government (including cities, counties, fire departments, or school districts) for subsequent years? This administrative regulation does not generate revenue and will not generate any additional revenue in subsequent years.

(c) How much will it cost to administer this program for the first year? This amendment will not require any additional costs during the first year. The amendment to this administrative regulation provides for the avoidance of federal financial penalty.

(d) How much will it cost to administer this program for subsequent years? This amendment will not require any additional costs during subsequent years. The amendment to this administrative regulation provides for the avoidance of federal financial penalty.

Note: If specific dollar estimates cannot be determined, provide a brief narrative to explain the fiscal impact of the administrative regulation.

Revenues (+/-):

Expenditures (+/-):

Other Explanation:

NEW ADMINISTRATIVE REGULATIONS RECEIVED THROUGH NOON, OCTOBER 15, 2011

GENERAL GOVERNMENT CABINET
Kentucky Real Estate Appraisers Board
(New Administrative Regulation)

201 KAR 30:375. Fees paid to appraisers.

RELATES TO: KRS 324A.150 through 324A.164
STATUTORY AUTHORITY: KRS 324A.152(8)
NECESSITY, FUNCTION, AND CONFORMITY: KRS 324A.154(2) requires the board to establish by administrative regulation rules governing the operation of an appraisal management company. This administrative regulation establishes requirements for operating an appraisal management company.

Section 1. (1) A registrant shall make payment to an engaged appraiser for the completion of an appraisal within forty-five days after the date on which the appraisal is transmitted or otherwise completed.
(2) Subsequent requests by a registrant to the appraiser for additional support of valuation or correction of factual and objective data shall not extend the payment date beyond the original 45 days from first receipt of appraisal.
(3) An appraiser shall comply with a registrant's request for additional data support of estimate of value or correction of factual and objective data errors within 15 days of request or be subject to complaint process to the Board by the registrant.
(4)(a) A registrant shall compensate a Kentucky licensed or certified appraiser at a rate that is mutually agreed to between the Appraiser and the registrant provided the fee is equal to or greater than the fee schedule of the U.S. Department of Veterans Affairs for similar properties in the same geographic areas of the Kentucky.
(b) Nothing in this subsection shall be construed to apply to any entity that is not under the board's jurisdiction under KRS 324A.164.
(5) An appraiser shall not be prohibited from including within each appraisal report the compensation received from the Appraisal Management Company for each appraisal assignment completed.

Section 2. Incorporation by Reference. (1) The U.S. Department of Veterans Affairs Fee Schedule is incorporated by reference.
(2) This material may be inspected, copied, or obtained, subject to applicable copyright law, at the Kentucky Real Estate Appraisers Board, 135 W. Irvine Street, Suite 301, Richmond, Kentucky 40475, (859) 623-1658, Monday through Friday, 8 a.m. to 4:30 p.m.

HAROLD BRANTLEY, Chair
APPROVED BY AGENCY: September 22, 2011
FILED WITH LRC: October 14, 2011 at 9 a.m.
PUBLIC HEARING AND PUBLIC COMMENT PERIOD: A public hearing on this administrative regulation shall be held on November 21, 2011 at 10:00 a.m., in the office of the Kentucky Board of Real Estate Appraisers; 135 W. Irvine Street, Suite 301, Richmond, Kentucky 40475, (859) 623-1658. Individuals interested in attending this hearing shall notify this agency in writing five workdays prior to the hearing of their intent to attend. If no notification of intent to attend the hearing is received by that date, the hearing may be canceled. This hearing is open to the public. Any person who attends will be given an opportunity to comment on the proposed administrative regulation. A transcript of the public hearing will not be made unless a written request for a transcript is made. If you do not wish to attend the public hearing, you may submit written comments on the proposed administrative regulation. Written comments shall be accepted until close of business on November 30, 2011. Send written notification of intent to attend the public hearing or written comments on the proposed administrative regulation to:
CONTACT PERSON: Larry Disney, Executive Director, Kentucky Board of Real Estate Appraisers, 135 W. Irvine Street, Suite 301, Richmond, Kentucky 40475, phone (859)623-1658; fax (859)623-2598.

REGULATORY IMPACT ANALYSIS AND TIERING STATEMENT

Contact Person: Larry Disney
(1) Provide a brief summary of:
(a) What this administrative regulation does: This administrative regulation establishes the minimum fee for that appraisal management companies shall paid when engaging appraisers. The minimum is set to be identical to the schedule already established by the Veteran's Administration of the Federal Government.
(b) The necessity of this administrative regulation: This administrative regulation is necessary to set a standard for customary and reasonable fees for appraisal services in the operation of an appraisal management company as outlined by the Interim Final Rule of the Board of Governors of the Federal Reserve System under the Dodd-Frank Wall Street Reform and Consumer Protection Act, 15 U.S. C. 1639e(i).
(c) How this administrative regulation conforms to the content of the authorizing statutes: KRS 324A.154(8) requires the board to establish by administrative regulation rules governing the standards of operation of an appraisal management company.
(d) How this administrative regulation currently assists or will assist in the effective administration of the statutes: This administrative regulation informs Appraisal Management Companies of the standards for reasonable and customary fees required to be paid appraisers for services rendered. The Board is setting this standard to insure that each appraiser performs appraisal work with the proper independent judgment, and is not subject to coercion or other similar influences that could cause him to shortcut his services or otherwise subject him to misconduct.
(2) If this is an amendment to an existing administrative regulation, provide a brief summary of:
(a) How the amendment will change this existing administrative regulation: This is a new administrative regulation.
(b) The necessity of the amendment to this administrative regulation: This is a new administrative regulation.
(c) How the amendment conforms to the content of the authorizing statutes: This is a new administrative regulation.
(d) How the amendment will assist in the effective administration of the statutes: This is a new administrative regulation.
(3) List the type and number of individuals, businesses, organizations, or state and local governments affected by this administrative regulation: The Board does not know the number of persons who will seek registration from the board at this time. Generally, states with similar characteristics to Kentucky have fifty to seventy-five registered Appraisal Management Companies.
(4) Provide an analysis of how the entities identified in question (3) will be impacted by either the implementation of this administrative regulation, if new, or by the change, if it is an amendment, including:
(a) List the actions that each of the regulated entities identified in question (3) will have to take to comply with this administrative regulation or amendment: This administrative regulation codifies under Kentucky law the standard for customary and reasonable fees for appraisal services in the operation of an appraisal management company as required by the Interim Final Rule of the Board of Governors of the Federal Reserve System under the Dodd-Frank Wall Street Reform and Consumer Protection Act, 15 U.S. C. 1639e(i). Appraisal Management Companies will then be able to demonstrate that they are clearly in compliance with of the federal guidelines in their payments for services performed by an appraiser.
(b) In complying with this administrative regulation or amendment, how much will it cost each of the entities identified in question (3): This administrative regulation will involve no additional costs to the Appraisal Management Companies as they are already required to pay customary and reasonable fees under the Interim Final Rule identified above.

(c) As a result of compliance, what benefits will accrue to the entities identified in question (3): This administrative regulation will eliminate any uncertainty for Appraisal Management Companies regarding customary and reasonable fees to be paid to appraisers for services.

(5) Provide an estimate of how much it will cost the administrative body to implement this administrative regulation:

(a) Initially: The Kentucky Appraisal Management Company Registration Act, KRS 324A.150 through 324A.164, provides for registration of appraisal management companies for the first time. Although it cannot identify costs with exactitude, the board will be expending funds for overhead, staff, and equipment.

(b) On a continuing basis: The Kentucky Appraisal Management Company Registration Act, KRS 324A.150 through 324A.164, provides for registration of appraisal management companies for the first time. Although it cannot identify costs with exactitude, the board will be expending funds for overhead, staff, and equipment.

(6) What is the source of the funding to be used for the implementation and enforcement of this administrative regulation: The board's operation is funded by fees paid by the licensees and applicants.

(7) Provide an assessment of whether an increase in fees or funding will be necessary to implement this administrative regulation, if new, or by the change if it is an amendment: No increase in fees to the Board will be necessary to implement this administrative regulation.

(8) State whether or not this administrative regulation established any fees or directly or

indirectly increased any fees: This administrative regulation does directly establish fees.

(9) TIERING: Is tiering applied? No.

FISCAL NOTE ON STATE OR LOCAL GOVERNMENT

1. Does this administrative regulation relate to any program, service, or requirements of a state or local government (including cities, counties, fire departments, or school districts)? Yes

2. What units, parts or divisions of state or local government (including cities, counties, fire departments, or school districts) will be impacted by this administrative regulation? Kentucky Real Estate Appraisers Board.

3. Identify each state or federal statute or federal regulation that requires or authorizes the action taken by the administrative regulation. KRS 324A.152(8); 15 U.S.C. 1639e(i); 12 C.F.R. 226.42(f).

4. Estimate the effect of this administrative regulation on the expenditures and revenues of a state or local government agency (including cities, counties, fire departments, or school districts) for the first full year the administrative regulation is to be in effect. None

(a) How much revenue will this administrative regulation generate for the state or local government (including cities, counties, fire departments, or school districts) for the first year? None

(b) How much revenue will this administrative regulation generate for the state or local government (including cities, counties, fire departments, or school districts) for subsequent years? None

(c) How much will it cost to administer this program for the first year? None

(d) How much will it cost to administer this program for subsequent years? None

Note: If specific dollar estimates cannot be determined, provide a brief narrative to explain the fiscal impact of the administrative regulation.

Revenues (+/-):

Expenditures (+/-):

Other Explanation:

GENERAL GOVERNMENT CABINET
Board of Interpreters for the Deaf and Hard of Hearing
(New Administrative Regulation)

201 KAR 39:011. Definitions.

RELATES TO: KRS 309.300(4), KRS 309.301

STATUTORY AUTHORITY: KRS 309.304(3)

NECESSITY, FUNCTION, AND CONFORMITY: KRS 309.304(3) requires the Kentucky Board of Interpreters for the Deaf and Hard of Hearing to promulgate administrative regulations pertaining to the practice and licensure of interpreters, interpreter intern or student in training. This administrative regulation sets forth the definition of terms and phrases which will be used by the board in enforcing and interpreting the provisions of Chapter 13A and the administrative regulations.

Section 1. Organizations and Individuals. (1) "NAD" means the National Association of the Deaf.

(2) "RID" means Registry of Interpreters for the Deaf, Inc.

(3) "TECUnit" means the National Training, Evaluation and Certification Unit.

(4) "Deaf Interpreter" means an individual who is deaf or hard of hearing and holds licensure.

(5) "Board-approved mentor" means:

(a) A licensed interpreter in this state or the resident of another state who can meet the requirements for licensure in this state as set forth in KRS Chapter 309 and the administrative regulations promulgated pursuant thereto;

(b) Who holds a valid certificate meeting the requirements for full licensure for a minimum of three (3) years prior to serving as a mentor; and

(c) Who has completed forty-five (45) hours of continuing education since obtaining certification;

(6) "Case manager" means a member of the board appointed by the chair of the board to review complaints, investigative reports, and to participate in informal proceedings to resolve a formal complaint.

(7) "Chair" means the chair or vice-chair of the board.

(8) "Complaint screening committee" means a committee consisting of three (3) persons on the board appointed by the chairman of the board to review complaints, investigative reports, and to participate in informal proceedings to resolve a formal complaint or recommend action to the board.

(9) "Investigator" means an individual designated by the board to assist the board in the investigation of a complaint.

Section 2. Certifications and Assessments. (1) National Interpreter Certification (NIC). Individuals who achieve the NIC level have passed the NIC Knowledge exam as administered by RID. They have scored within the standard range on the interview and performance portions of the test.

(2) National Interpreter Certification (NIC Advanced). Individuals who achieved the NIC Advanced level have passed the NIC Knowledge exam as administered by RID; scored within the standard range on the interview portion; and scored within the high range on the performance portion of the test.

(3) National Interpreter Certification Master (NIC Master). Individuals who achieved the NIC Master level have passed the NIC Knowledge exam as administered by RID. They have scored within the high range on both the interview and performance portions of the test.

(4) Comprehensive Skills Certificate (CSC) granted by RID. Holders of this certificate have demonstrated the ability to interpret between American Sign Language and Spoken English and to transliterate between spoken English and an English-based sign language.

(5) Certificate of Transliteration (CT) granted by RID. Holders of this certificate have demonstrated the ability to transliterate between English-based sign language and spoken English in both sign-to-voice and voice-to-sign. The transliterator's ability to interpret is not considered in this certification;

(6) Certificate of Interpretation (CI) granted by RID. Holders of this certificate have demonstrated the ability to interpret between

American Sign Language and spoken English in both sign-to-voice and voice-to-sign. The interpreter's ability to transliterate is not considered in this certification;

(7) Interpreting Certificate/Transliteration Certificate (IC/TC) granted by RID. Holders of this certificate have demonstrated the ability to transliterate between English and a signed code for English and the ability to interpret between American Sign Language and spoken English;

(8) Interpretation Certificate (IC) granted by RID. Holders of this certificate have demonstrated ability to interpret between American Sign Language and spoken English;

(9) Transliteration Certificate (TC) granted by RID. Holders of this certificate have demonstrated the ability to transliterate between spoken English and a signed code for English.

(10) Master Comprehensive Skills Certificate (MCSC) granted by RID. Holders of this certificate have demonstrated a higher standard of performance than holders of the CSC. Holders of this certificate are recommended for a broad range of interpreting and transliterating assignments.

(11) Specialist Certificate: Legal(SC:L) granted by RID. Holders of this certificate have demonstrated specialized knowledge of legal settings and greater familiarity with language used in the legal system. Holders of the SC:L are recommended for a broad range of assignments in the legal setting;

(12) Specialist Certificate: Performing Arts (SC:PA) granted by RID. Holders of this certificate have demonstrated specialized knowledge in performing arts interpretation. Holders of this certificate are recommended for a broad range of assignments in the performing arts setting;

(13) Oral Transliteration Certificate (OTC) granted by RID. Holders of this certificate have demonstrated ability to transliterate a spoken message from a person who hears to a person who is deaf or hard-of-hearing and the ability to understand and repeat the message and intent of the speech and mouth movements of the person who is deaf and hard-of-hearing;

(14) Oral Interpreting Certificate. Comprehensive (OIC:C) granted by RID. Holders of this certificate have demonstrated the ability to transliterate a spoken message from a person who hears to a person who is deaf or hard-of-hearing and the ability to understand and repeat the message and intent of the speech and mouth movements of the person who is deaf or hard-of-hearing;

(15) Oral Interpreting Certificate. Spoken to Visible (OIC:S/V) granted by RID. Holders of this certificate have demonstrated the ability to transliterate a spoken message from a person who hears to a person who is deaf or hard-of-hearing.

(16) Oral Interpreting Certificate. Visible to Spoken (OIC:V/S) granted by RID. Holders of this certificate have demonstrated the ability to understand the speech and silent mouth movements of a person who is deaf or hard-of-hearing and to repeat the message for a hearing person.

(17) NAD Level V (Master). Holders of this certificate have demonstrated superior voice-to-sign skills and excellent sign-to-voice skills. Holders of this certificate are recommended for a broad range of interpreting assignments.

(18) NAD Level IV (Advanced). Holders of this certificate have demonstrated excellent voice-to-sign skills and above average sign-to-voice skills. Holders of this certificate are recommended for most situations.

(19) NAD Level III (Generalist). Holders of this certificate have demonstrated average voice-to-sign skills and good sign-to-voice skills. This individual has demonstrated the minimum competence needed to meet generally accepted interpreter standards but is not qualified for all situations.

(20) Educational Certificate: K-12 (Ed: K-12) granted by RID. Holders of this certificate have demonstrated the ability to interpret classroom content, discourse and the ability to interpret student sign language. Holders have demonstrated proficient expressive and receptive interpreting skills in all elementary and secondary school classroom settings.

(21) Education Interpreter Performance Assessment (EIPA) granted by Boys Town National Research Hospital: Holders of an EIPA assessment have demonstrated the ability to expressively interpret classroom content and discourse and the ability to receptively interpret student sign language. It is not limited to any one sign language or system. Holders are recommended to work with students who predominately use American Sign Language (ASL), Manually-Coded English (MCE) or Pidgin Sign English (PSE).

(22) Certified Deaf Interpreter (CDI) granted by RID. Holders of this certificate are interpreters who are deaf or hard of hearing and have passed comprehensive written and performance tests. Holders of this certificate are recommended for a broad range of assignments where an interpreter who is deaf or hard of hearing would be beneficial.

(23) Conditional Legal Interpreting Permit-Relay (CLIP-R) granted by RID. Holders of this conditional permit have completed a RID-recognized training program designed for interpreters and transliterators who work in legal settings and who are also deaf or hard-of-hearing. Holders of this conditional permit are recommended for a broad range of assignments in the legal setting.

(24) Reverse Skills Certificate (RSC) granted by RID: Holders of this certificate are deaf or hard of hearing and have demonstrated the ability to interpret between American Sign Language and English-based sign language or transliterate between spoken English and a signed code for English. American Sign Language Proficiency Interview (ASLPI) as administered by Gallaudet University. This assessment rates the ability to use American Sign Language grammar and vocabulary in most formal and informal conversations on social and work topics. Sign Language Proficiency Interview (SLPI) as developed by National Technical Institute for the Deaf. This assessment rates the ability to communicate expressively and receptively in a video-taped one-on-one interview/conversation with a trained interviewer. Sign Communication Proficiency Interview (SCPI) as developed by National Technical Institute for the Deaf. This assessment rates the ability to communicate expressively and receptively in a video-taped one-on-one interview/conversation with a trained interviewer.

(28) Cued Language Transliterator National Certification Examination (CLTNCE): Ones who pass this Examination have demonstrated skills that satisfy the TECUnit minimum standard of both knowledge and skills in cued language transliteration. Holders of this certificate are recommended for limited settings that require cued speech.

Section 3. Other Terms. (1) "One (1) continuing education hour" means sixty (60) contact minutes of participating in continuing education experiences.

(2) "Voluntary surrender" means the process by which a person who holds a license issued by the board, knowingly and willingly, returns the license to the board, forfeiting all rights and privileges associated with that license, in settlement of a disciplinary action initiated by the board.

(3) "Revoked" means the process by which the board terminates all rights and privileges associated with that license, in settlement of a disciplinary action initiated by the board.

(4) "Charge" means a specific allegation contained in a formal complaint issued by the board alleging a violation of a specified provision of KRS 309.300 to 309.319, the administrative regulations promulgated thereunder, or any other state or federal statute or regulation.

(5) "Complaint" means any written or videotaped allegation of misconduct by a licensed individual that might constitute a violation of KRS 309.300 to 309.319, the administrative regulations promulgated thereunder, or any state or federal statute regulating the practice of interpreting.

(6) "Formal complaint" means a formal administrative pleading authorized by the board which sets forth charges against a licensed individual or other person and commences a formal disciplinary proceeding pursuant to KRS Chapter 13B or requests the court to take criminal or civil action.

(7) "Informal proceedings" means the proceedings instituted at any stage of the disciplinary process with the intent of reaching a dispensation of any matter without further recourse to formal disciplinary procedures under KRS Chapter 13B.

(8) "Deaf or Hard of Hearing Individuals" mean individuals who have hearing disorders and who cannot hear and understand speech clearly through the ear alone with or without amplification. This shall be verified by a licensed medical professional specializing in the provision of services to the deaf and hard of hearing.

(9) "Licensure year" means the period between July 1st of each year and June 30th of the following year or the time from which a license or temporary license was granted until the next June 30th.

ARTIE GRASSMAN, Board Chair

APPROVED BY AGENCY: October 12, 2011

FILED WITH LRC: October 14, 2011 at noon

PUBLIC HEARING AND PUBLIC COMMENT PERIOD: A public hearing on this administrative regulation shall be held on November 21, 2011 at 11:00am (EST) at 911 Leawood Drive, Frankfort, Kentucky 40601. Individuals interested in being heard at this hearing shall notify this agency in writing five working days prior to the hearing, of their intent to attend. If no notification of intent to attend the hearing is received by that date, the hearing may be cancelled. This hearing is open to the public. Any person who wishes to be heard will be given an opportunity to comment on the proposed administrative regulation. A transcript of the public hearing will not be made unless a written request for a transcript is made. If you do not wish to be heard at the public hearing, you may submit written comments on the proposed administrative regulation. Written comments shall be accepted until at the close of business on November 30, 2011. Send written notification of intent to be heard at the public hearing or written comments on the proposed administrative regulation to the contact person.

CONTACT PERSON: Karen Lockett, Board Administrator, Kentucky Board of Interpreters for the Deaf and Hard of Hearing, PO Box 1370, Frankfort, Kentucky 40602, phone (502) 564-3296 ext. 222, fax (502) 696-1923.

REGULATORY IMPACT ANALYSIS AND TIERING STATEMENT

Contact Person: Michael West

(1) Provide a brief summary of

(a) What this administrative regulation does: This defines terms for this regulatory chapter.

(b) The necessity of this administrative regulation: This defines terms for this regulatory chapter.

(c) How this administrative regulation conforms to the content of the authorizing statutes: The regulation is in conformity as the authorizing statute gives the board the ability to promulgate regulations generally.

(d) How this administrative regulation currently assists or will assist in the effective administration of the statutes: This defines terms for this regulatory chapter.

(2) If this is an amendment to an existing administrative regulation, provide a brief summary of:

(a) How the amendment will change this existing administrative regulation: This is a new regulation.

(b) The necessity of the amendment to this administrative regulation: This is a new regulation.

(c) How the amendment conforms to the content of the authorizing statutes: This is a new regulation.

(d) How the amendment will assist in the effective administration of the statutes: This is a new regulation.

(3) List the type and number of individuals, businesses, organizations, or state and local governments affected by this administrative regulation: There are approximately 300 full and temporarily licensed interpreters.

(4) Provide an analysis of how the entities identified in question (3) will be impacted by either the implementation of this administrative regulation, if new, or by the change, if it is an amendment, including:

(a) List the actions that each of the regulated entities identified in question (3) will have to take to comply with this administrative regulation or amendment: None

(b) In complying with this administrative regulation or amendment, how much will it cost each of the entities identified in question (3): None

(c) As a result of compliance, what benefits will accrue to the entities identified in question (3): The regulations will clearer as a result of definitions in this section putting licensees on heightened notice as to all actions of the Board

(5) Provide an estimate of how much it will cost to implement this administrative regulation:

(a) Initially: No new costs will be incurred.

(b) On a continuing basis: No new costs will be incurred.

(6) What is the source of the funding to be used for the implementation and enforcement of this administrative regulation: The board's operations are funded by fees paid by licensees.

(7) Provide an assessment of whether an increase in fees or funding will be necessary to implement this administrative regulation, if new, or by the change if it is an amendment: No fees will be required to implement this administrative regulation amendment.

(8) State whether or not this administrative regulation establishes any fees or directly or indirectly increases any fees: This regulation established but does not change fees from their current level.

(9) TIERING: Is tiering applied? Tiering is not applied to this regulation.

FISCAL NOTE ON STATE OR LOCAL GOVERNMENT

1. Does this administrative regulation relate to any program, service, or requirements of a state or local government (including cities, counties, fire departments, or school districts)? Yes

2. What units, parts or divisions of state or local government (including cities, counties, fire departments, or school districts) will be impacted by this administrative regulation? Kentucky Board of Interpreters for the Deaf and Hard of Hearing

3. Identify each state or federal statute or federal regulation that requires or authorizes the action taken by the administrative regulation: KRS 309.304(3)

4. Estimate the effect of this administrative regulation on the expenditures and revenues of a state or local government agency (including cities, counties, fire departments, or school districts) for the first full year the administrative regulation is to be in effect. None

(a) How much revenue will this administrative regulation generate for the state or local government (including cities, counties, fire departments, or school districts) for the first year? None

(b) How much revenue will this administrative regulation generate for the state or local government (including cities, counties, fire departments, or school districts) for subsequent years? None

(c) How much will it cost to administer this program for the first year? None

(d) How much will it cost to administer this program for subsequent years? None

Note: If specific dollar estimates cannot be determined, provide a brief narrative to explain the fiscal impact of the administrative regulation.

Revenues (+/-):

Expenditures (+/-):

Other Explanation:

TOURISM, ARTS AND HERITAGE CABINET
Department of Parks
(New Administrative Regulation)

304 KAR 1:070. Kentucky Proud™ Promotion Program.

RELATES TO: KRS 45A.645, 260.016

STATUTORY AUTHORITY: KRS 148.830 to 148.840

NECESSITY, FUNCTION, AND CONFORMITY: KRS 148.830(2) requires the Commissioner of Parks to promulgate administrative regulations relating to the promotion of Kentucky-grown agricultural products to operate in conjunction with the Kentucky Proud™ Program. This administrative regulation establishes guidelines for the promotion program.

Section 1.The Kentucky Department of Parks, in cooperation with the Kentucky Department of Agriculture, shall promote Kentucky grown and Kentucky Proud™ Products in its state resort park restaurants, gift shops, concessions, and golf courses. The Department of Parks' promotion program shall encourage the Department to utilize local vendors, when feasible and cost effective, and to explore all available marketing and merchandising oppor-

tunities.

GERRY VAN DER MEER, Commissioner

APPROVED BY AGENCY: September 15, 2011

FILED WITH LRC: September 16, 2011 at 1 p.m.

PUBLIC HEARING AND PUBLIC COMMENT PERIOD A public hearing on this administrative regulation shall be held on Tuesday, November 29, 2011 at 2:00 p.m. at the Tourism, Arts and Heritage Cabinet, 500 Mero Street, Capital Plaza Tower, 24th Floor, Frankfort Kentucky 40601. Individuals interested in being heard at this hearing shall notify this agency in writing, five workdays prior to the hearing, of their intent to attend. If no notification of intent to attend the hearing is received by that date, the hearing may be canceled. This hearing is open to the public. Any person who wishes to be heard will be given an opportunity to comment on the proposed administrative regulation. A transcript to the public hearing will not be made unless a written request for a transcript is made. If you do not wish to be heard at the public hearing, you may submit written comments on the proposed administrative regulation. Written comments shall be accepted until November 30, 2011. Send written notification of intent to be heard at the public hearing or written comments on the proposed administrative regulation to the contact person.

CONTACT PERSON: Melany Crawford, Legal Counsel, Tourism, Arts and Heritage Cabinet, 500 Mero Street, 24th Floor, Capital Plaza Tower, Frankfort, Kentucky 40601, phone (502)564-8110.

REGULATORY IMPACT ANALYSIS AND TIERING STATEMENT

Contact Person: Melany K. Crawford, Mona Juett

(1) Provide a brief summary of:

(a) What this administrative regulation does: Establishes guidelines for promotion of Kentucky-grown agricultural products to operate in conjunction with the Kentucky Proud™ Program.

(b) The necessity of this administrative regulation: KRS 148.830 requires the Department of Parks to establish a promotion program within the Department of Parks to promote the sale of Kentucky-grown agricultural products in state resort park restaurants, gift shops, concessions and golf courses. The statute also requires the Commissioner of the Department of Parks to promulgate administrative regulations to implement the promotion program. KRS 148.835 requires the Department of Parks to establish a promotion program within the Department of Parks to require that if purchasing agricultural products, state parks purchase Kentucky-grown agricultural products if the purchasing officer determines that they are available, can be priced on the menu to encourage their sale, and meet the quality standards set by the Department of Parks.

(c) How this administrative regulation conforms to the content of the authorizing statutes: KRS 148.021 authorizes the Commissioner of the Department of Parks to promulgate administrative regulations reasonably necessary to implement or carry out the purposes of KRS Chapter 148. KRS 148.830 requires the Department of Parks to establish a promotion program within the Department of Parks to promote the sale of Kentucky-grown agricultural products in state resort park restaurants, gift shops, concessions and golf courses. KRS 148.835 requires the Department of Parks to establish a promotion program within the Department of Parks to require that if purchasing agricultural products, state parks purchase Kentucky-grown agricultural products if the purchasing officer determines that they are available, can be priced on the menu to encourage their sale, and meet the quality standards set by the Department of Parks.

(d) How this administrative regulation currently assists or will assist in the effective administration of the statutes: This administrative regulation establishes guidelines for the promotion program.

(2) If this is an amendment to an existing administrative regulation, provide a brief summary of:

(a) How the amendment will change this existing administrative regulation:
Not applicable, this is a new administrative regulation.

(b) The necessity of the amendment to this administrative regulation: Not applicable.

(c) How the amendment conforms to the content of the authorizing statutes:
Not applicable.

(d) How the amendment will assist in the effective administration of the statutes: Not applicable.

(3) List the type and number of individuals, businesses, organizations or state and local governments affected by this administrative regulation: The Department of Parks will be affected by this administrative regulation and the public will become more informed about the Department of Parks efforts to utilize Kentucky-grown and Kentucky Proud™ Products in its state resort park restaurants, gift shops, concessions and golf courses.

(4) Provide an assessment of how the above group or groups will be impacted by either implementation of this administrative regulation, if new, or by the change, if it is an amendment: Guests visiting Kentucky State Parks will become more aware of the Department of Parks efforts to promote Kentucky-grown and Kentucky Proud™ Products. The Kentucky Department of Parks may be required to expend additional staff resources and funds to implement the promotion program, but may also realize additional revenues from the program's initiatives.

(5) Provide an estimate of how much it will cost to implement this administrative regulation:

(a) Initially: The estimate of implementation costs for the promotion program depends of the goals of the program and the available funding from the Department of Parks.

(b) On a continuing basis: The estimate of implementation costs for the promotion program depends of the goals of the program and the available funding from the Department of Parks.

(6) What is the source of the funding to be used for the implementation and enforcement of this administrative regulation: Agency funds.

(7) Provide an assessment of whether an increase in fees or funding will be necessary to implement this administrative regulation, if new, or by the change if it is an amendment: Fees are not necessary to implement this administrative regulation.

(8) State whether or not this administrative regulation established any fees or directly or indirectly increased any fees: This administrative regulation does not directly or indirectly establish or increase any fee.

(9) TIERING: Is tiering applied? Tiering was not applied to this administrative regulation. All individuals who visit Kentucky State Parks will encounter the promotion program equally.

FISCAL NOTE ON STATE OR LOCAL GOVERNMENT

1. Does this administrative regulation relate to any program, service, or requirements of a state or local government (including cities, counties, fire departments, or school districts)? Yes

2. What units, parts or divisions of state or local government (including cities, counties, fire departments, or school districts) will be impacted by this administrative regulation? The Kentucky Department of Parks will be impacted by this administrative regulation.

3. Identify each state or federal statute or federal regulation that requires or authorizes the action taken by the administrative regulation: KRS 148.830 mandates that the Commissioner of the Department of Parks shall promulgate administrative regulations to implement a promotion program for the sale of Kentucky-grown agricultural products in state resort park restaurants, gift shops, concessions and golf courses.

4. Estimate the effect of this administrative regulation on the expenditures and revenues of a state or local government agency (including cities, counties, fire departments, or school districts) for the first full year the administrative regulation is to be in effect: Expenditures for the Kentucky Department of Parks May change. The Department of Parks Food Service division is already marketing use of Kentucky-grown agricultural products and Kentucky Proud™ products throughout the state park system. However, additional staff time will likely be required to coordinate the new program. Revenues may increase if the promotion program leads to greater sales of Kentucky-grown agricultural products and Kentucky Proud™ products.

(a) How much revenue will this administrative regulation generate for the state or local government (including cities, counties,

fire departments, or school districts) for the first year? Revenues may increase if the promotion program leads to greater sales of Kentucky-grown agricultural products and Kentucky Proud™ products. The specific amount of revenue is not known.

(b) How much revenue will this administrative regulation generate for the state or local government (including cities, counties, fire departments, or school districts) for subsequent years? Again, Revenues may increase if the promotion program leads to greater sales of Kentucky-grown agricultural products and Kentucky Proud™ products. The specific amount of revenue is not known.

(c) How much will it cost to administer this program for the first year? The program will likely incur costs as additional staff time will be required to coordinate any new program initiatives that may arise through the program.

(d) How much will it cost to administer this program for subsequent years? Unknown, depending on the scope of the project in future years.

Note: If specific dollar estimates cannot be determined, provide a brief narrative to explain the fiscal impact of the administrative regulation.

Revenues (+/-):

Expenditures (+/-):

Other Explanation:

EDUCATION AND WORKFORCE DEVELOPMENT CABINET
Kentucky Board of Education
Department of Education
(New Administrative Regulation)

704 KAR 19:001. Alternative Education Programs.

RELATES TO: KRS 156.160, KRS 156.070

STATUTORY AUTHORITY: KRS 156.160, KRS 156.070

NECESSITY, FUNCTION, AND CONFORMITY:
KRS 156.070 gives the Kentucky Board of Education the authority over the management and control of programs operated in the public schools. KRS 156.160 gives the Kentucky Board of Education specific authority to promulgate administrative regulations establishing standards which school districts shall meet in program service to students. This administrative regulation establishes minimum requirements for the operation of alternative education programs in school districts.

Section 1. Definitions. (1) "Alternative Education Programs" are programs that exist to meet the needs of students that cannot be addressed in a traditional classroom setting through the assignment of students to alternative classrooms, centers or campuses designed to remediate academic performance, improve behavior or provide an enhanced learning experience. Alternative education programs do not include career and technical centers or departments.

(2) "Alternative Education Placement Team" is a team established to develop an alternative individualized learning plan for each student placed in an alternative program. The student's parent or legal guardian shall be invited to participate on the team.

(3) "Alternative Individualized Learning Plan" is an action plan that addresses the individual educational needs of the student. The alternative education placement team shall develop the plan. The alternative individualized learning plan shall include the following:

(a) Academic, behavioral or therapeutic needs of the student;

(b) Criteria for the student's re-entry into the traditional program;

(c) Provisions for regular review of the student's progress throughout the school year while in an alternative education program; and

(d) Inclusion of components of the student's Individual Learning Plan (ILP) pursuant to 704 KAR 3:305 while placed in an alternative education program.

(4) "Involuntary Placement" is the placement of a student in an alternative education program by local district school personnel to:

(a) Ensure the safety of the individual student or the student body;

(b) Meet the educational needs of the student; or

(c) Effectuate the placement as a state agency child pursuant to KRS 158.135 and 505 KAR 1:080.

(5) "On-site Program" is an alternative education program located within the student's assigned school.

(6) "Off-site Program" is an alternative education program located in a separate and dedicated program facility not located within the student's assigned school.

(7) "Type I Academic Programs" are alternative education programs targeted to provide educational supports for remediation services; intervention and support services; or innovative and accelerated curriculum options for students who have not excelled in the traditional program.

(8) "Type II Disciplinary Programs" are programs targeted to provide educational supports for disruptive students who need additional behavioral interventions to succeed in the school environment.

(9) "Type III State Agency Children Programs" are programs targeted to provide therapeutic supports to students with social and emotional issues that create barriers to learning pursuant to KRS 158.135, KRS 605.110 and 505 KAR 1:080.

(10) "Voluntary Placement" is when parents, emancipated students and school personnel choose to place the student into an alternative education program to better meet the educational needs of the student.

Section 2. General Requirements. (1) Districts shall ensure that alternative education programs encompass a wide range of learning opportunities for students that are comparable to or exceed opportunities available in the traditional classroom setting and that are aimed toward college and career readiness. Alternative programs shall not be limited to one type of program offering to students. Students enrolled in alternative education programs shall be eligible to participate in one or more types of programs to address student needs including virtual school, credit recovery and innovative pathways to graduation.

(2) Local boards of education shall adopt policies and procedures for the operation of alternative education programs within the district. Locally adopted policies and procedures shall include:

a. Goals of the program;

b. Eligibility criteria;

c. Process for placement of students in the program;

d. Process for transition of students out of the program;

e. Composition of the Alternative Education Placement Team; and

f. Procedures for collaboration with outside agencies, including courts or other social service agencies.

(3) Alternative educational programs may be offered either on-site or off-site.

(4) Alternative education classroom instruction practices and graduation requirements shall correspond with the Kentucky Board of Education's curriculum standards, student learning goals and curriculum and assessment requirements in KRS 156.160; 158.645; 158.6451 and 704 KAR 3:305.

Section 3. Placement of Students. (1) The placement of students in alternative education programs shall be voluntary or involuntary. Students entering alternative education programs shall meet the eligibility requirements for the program established by the local board in Section 2 of this regulation.

(2) The parent(s) or legal guardian(s) of the student shall be invited to participate in the placement team. The placement team for all students with an Individualized Education Program (IEP) shall be the Admission and Release Committee (ARC) pursuant to 707 KAR 1:320 which is responsible for the student's Individual Education Plan (IEP). For students with IEP's, the alternative individualized learning plan shall be the IEP.

(3) Students participating in alternative education programs shall be eligible to access extracurricular activities pursuant to local district policies and all applicable rules of participation and pursuant to 702 KAR 7:065 or other applicable organization rules.

(4) Students participating in alternative education programs shall be eligible to access tutoring, intervention and counseling services as considered appropriate by the alternative education placement team.

Section 4. Costs and Expenditures. Districts shall use the statewide financial management system and the current chart of accounts to track costs and expenditures associated with each alternative education program operating in the district.

Section 5. Data. Beginning in the 2012-2013 school year, districts shall utilize the student information system to enter data regarding students in alternative education programs. Data shall be entered to:

(a) Identify the individual students participating in each alternative education program;

(b) Identify the aggregate number of students served or participating in alternative education programs during the school year;

(c) Identify the entry and exit dates of students from alternative education programs;

(d) Identify the next placement of the student departing an alternative education program;

(e) Identify the type and name of the alternative education programs being offered; and

(f) Identify whether the placement is voluntary or involuntary.

Section 6. Personnel. Alternative education program teachers and administrators shall be subject to the teacher certification requirements of KRS Chapter 161.

This is to certify that the chief state school officer has reviewed and recommended this administrative regulation prior to its adoption by the Kentucky Board of Education, as required by KRS 156.070(4).

TERRY HOLLIDAY, Ph.D., Commissioner

For DAVID KAREM, Chairperson

APPROVED BY AGENCY: October 14, 2011

FILED WITH LRC: October 14, 2011 at noon

PUBLIC HEARING AND PUBLIC COMMENT PERIOD: A public hearing on this proposed administrative regulation shall be held on November 28, 2011, at 10:00 a.m. in the State Board Room, 1st Floor, Capital Plaza Tower, 500 Mero Street, Frankfort, Kentucky. Individuals interested in being heard at this meeting shall notify this agency in writing five working days prior to the hearing, of their intent to attend. If no notification of intent to attend the hearing is received by that date, the hearing may be canceled. This hearing is open to the public. Any person who wishes to be heard will be given an opportunity to comment on the proposed administrative regulation. A transcript of the public hearing will not be made unless a written request for a transcript is made. If you do not wish to be heard at the public hearing, you may submit written comments on the proposed administrative regulation. Written comments shall be accepted until November 30, 2011. Send written notification of intent to be heard at the public hearing or written comments on the proposed administrative regulation to

CONTACT PERSON: Kevin C. Brown, General Counsel, Kentucky Department of Education, First Floor, Capital Plaza Tower, 500 Mero Street, Frankfort, Kentucky 40601, phone 502-564-4474, fax 502-564-9321 or email at kevin.brown@education.ky.gov.

REGULATORY IMPACT ANALYSIS AND TIERING STATEMENT

Contact Person: Kevin C. Brown

(1) Provide a brief summary of:

(a) What this administrative regulation does: This administrative regulation establishes minimum program requirements for the operation of alternative education programs in school districts.

(b) The necessity of this administrative regulation: This administrative regulation is necessary to provide minimum program standards for alternative programs and to initiate data collection to identify information about these programs and the students they serve. This data collection is necessary to determine if programs can be operated more efficiently and provide better outcomes for students.

(c) How this administrative regulation conforms to the content of the authorizing statute: KRS 156.160 gives the Kentucky Board of Education (KBE) authority to promulgate regulations establishing standards for programs serving Kentucky students. This administrative regulation provides minimum standards for operating alternative programs for students.

(d) How this administrative regulation currently assists or will assist in the effective administration of the statutes: This administrative regulation provides specific definitions and standards for the operation of alternative programs.

(2) If this is an amendment to an existing administrative regulation, provide a brief summary of:

(a) How the amendment will change this existing administrative regulation: Not an amendment.

(b) The necessity of the amendment to this administrative regulation: Not an amendment.

(c) How the amendment conforms to the content of the authorizing statute: Not an amendment.

(d) How the amendment will assist in the effective administration of the statutes: Not an amendment.

(3) List the type and number of individuals, businesses, organizations, or state and local governments affected by this administrative regulation: Local boards of education, all public schools and school districts in Kentucky that operate alternative education programs for students..

(4) Provide an analysis of how the entities identified in question (3) will be impacted by either the implementation of this administrative regulation, if new, or by the change, if it is an amendment, including: The proposed regulation will impact identified schools and districts by providing the detail necessary to provide effective alternative programs for students who need them. The regulation will provide a minimum set of requirements districts must provide for students who receive educational services through an alternative school setting.

(a) List the actions that each of the regulated entities identified in question (3) will have to take to comply with this administrative regulation or amendment: Local boards of education will be required to adopt policies and procedures for operation of their alternative programs, while schools and school districts will be required to implement those policies and procedures. Schools and districts must initiate data collection to identify information about these programs and the students they serve and track program costs. The state education agency will use the data to determine new program requirements or changes in current program requirements that may be needed.

(b) In complying with this administrative regulation or amendment, how much will it cost each of the entities identified in question (3): The schools and/or school districts will have costs related to convening the placement team and developing the individualized learning plan, and any costs related to additional data collection. The state education agency will have costs related to data collection, analysis and development of recommendations.

(c) As a result of compliance, what benefits will accrue to the entities identified in question (3): Students and parents will have a plan that addresses the student needs and school program to be provided during the period of their placement; schools and districts will have a set of minimum expectations that must be met in the operation of alternative programs but sufficient flexibility to design programs that may best benefit students, schools and districts; and the SEA will have better data on the numbers of students served and characteristics of their placement.

(5) Provide an estimate of how much it will cost the administrative body to implement this administrative regulation:

(a) Initially: Unknown, but limited. Staff time to collect and analyze data, determine needed changes in program requirements, and monitor the program.

(b) On a continuing basis: Unknown, but limited. Staff time to collect and analyze data, determine needed changes in program requirements, and monitor the program.

(6) What is the source of the funding to be used for the implementation and enforcement of this administrative regulation: State general funds

(7) Provide an assessment of whether an increase in fees or funding will be necessary to implement this administrative regulation, if new, or by the change if it is an amendment: No increase will be necessary.

(8) State whether or not this administrative regulation establishes any fees or directly or indirectly increases any fees: This

administrative regulation does not establish fees or directly or indirectly increase any fees.

(9) TIERING: Is tiering applied? Tiering was not appropriate in this administrative regulation because the administrative regulation applies equally to all school districts containing alternative programs.

FISCAL NOTE ON STATE OR LOCAL GOVERNMENT

1. Does this administrative regulation relate to any program, service, or requirements of a state or local government (including cities, counties, fire departments, or school districts)? Yes

2. What units, parts or divisions of state or local government (including cities, counties, fire departments, or school districts) will be impacted by this administrative regulation? Local boards of education, school districts.

3. Identify each state or federal statute or federal regulation that requires or authorizes the action taken by the administrative regulation. KRS 156.160; KRS 156.070

4. Estimate the effect of this administrative regulation on the expenditures and revenues of a state or local government agency (including cities, counties, fire departments, or school districts) for the first full year the administrative regulation is to be in effect. There will be no additional revenue generated by this administrative regulation. State agency expenditures should be minimal; primarily additional staff time to collect and analyze data, determine needed changes in program requirements, and monitor the program. School and district expenditures will primarily be costs of staff time to develop policies, collect data, convene placement teams and develop learning plans. Expenditures will vary based on the numbers of alternative programs in the district and the numbers of students enrolled

(a) How much revenue will this administrative regulation generate for the state or local government (including cities, counties, fire departments, or school districts) for the first year? None

(b) How much revenue will this administrative regulation generate for the state or local government (including cities, counties, fire departments, or school districts) for subsequent years? None.

(c) How much will it cost to administer this program for the first year? The cost will depend on the numbers of programs and students identified.

(d) How much will it cost to administer this program for subsequent years? The cost will depend on the numbers of programs and students identified.

Note: If specific dollar estimates cannot be determined, provide a brief narrative to explain the fiscal impact of the administrative regulation.

Revenues (+/-): None

Expenditures (+/-): Unclear. Dependent on numbers of programs and students enrolled.

Other Explanation: The regulation provides definitions of alternative programs, and requires student placement be made through an alternative education placement team, which also develops an alternative individualized learning plan. Local boards of education must develop operational policies and procedures, and collect data on students and programs. School and district expenditures will primarily be costs of staff time to develop policies, collect data, convene placement teams and develop learning plans. Expenditures will vary based on the numbers of alternative programs in the district and the numbers of students enrolled. The KDE primarily additional staff time to collect and analyze data, determine needed changes in program requirements, and monitor the program. Again, expenditures will vary based on the numbers of students/programs involved.

ADMINISTRATIVE REGULATION REVIEW SUBCOMMITTEE
Minutes of October 11, 2011

Call to Order and Roll Call

The October meeting of the Administrative Regulation Review Subcommittee was held on Tuesday, October 11, 2011, at 1:00 p.m., in Room 149 of the Capitol Annex. Senator Joe Bowen, Co-Chair, called the meeting to order, the roll call was taken. The minutes of the September 2011 meeting were approved.

Present were:

Members: Senators Joe Bowen, David Givens, and Joey Pendleton, and Representatives Johnny Bell, Danny Ford, and Jimmie Lee.

LRC Staff: Dave Nicholas, Emily Caudill, Donna Little, Sarah Amburgey, Emily Harkenrider, Karen Howard, Betsy Cupp, and Laura Napier.

Guests: Mike Carr, Dr. Kim Walters-Parker, Alicia Sneed, Educational Professional Standards Board; Mark Sipek, Personnel Board; Dinah Bevington, Personnel Cabinet; Jonathan Buckley, David Cox, State Board of Licensure for Professional Engineers and Land Surveyors; Mark Brengelman, Becky Klusch, Board of Physical Therapy; Mark Brengelman, Scott Brinkman, Kentucky Applied Behavior Analyst Licensing Board; Tamara McDaniel, Peggy Lacy Moore, Robert W. Powell, Janet Vogt, Board of Respiratory Care; John Brunjes, Kristina Brunjes, Jon Gassett, Karen Waldrop, Margaret Everson, Department of Fish and Wildlife Resources; Anna M. Lucio, Mac Stone, Clint Quarles, Department of Agriculture; Amy Barker, Department of Corrections; Graham Gray, William Herald, Morgain Sprague, Heather Wagers, Kentucky State Police; Sandy Chapman, DJ Wasson, Maggie Woods, Department of Insurance; Dawn Bellis, Jerry Lunsford, George Mann, Department of Housing, Buildings and Construction; Elizabeth Caywood, Lee Etta Cummings, IJ Eneje, Vonia Grabeel, Matt McKinley, Stuart Owen, Ken Spach, Marissa Vega Velez, Chandra Venettozzi, Cabinet for Health and Family Services; Rick Allen, Bluegrass Sportsman's League, Anderson County Sportman's Club, Ky Grouse Hunter's Association; Carol Beese, Kentucky Ornithological Society; Carl Boes, KARP; Pete Blandford, Quality Deer Management Association, James Daniel, Self-employed; Robert Fraley, KOSA; Chet Hayes, United Trapers of Kentucky; Mark Nethery, League of Ky Sportsman; Joe Rossler, 5th District Federation of Lock 5; Dan Saunders, Cambell County Game and Fish; Bobby Spencer, Ky NWTF; Barry Welty, KyDu State Conversation Committee; and Jon Woodall, Kentucky Fish and Wildlife Foundation.

The Administrative Regulation Review Subcommittee met on Tuesday, October 11, 2011, and submits this report:

Administrative Regulations Reviewed by the Subcommittee:

EDUCATION PROFESSIONAL STANDARDS BOARD: Teaching Certificates

16 KAR 2:040. Interdisciplinary early childhood education, birth to primary. Mike Carr, director of certification; Dr. Kim Walters - Parker, director of educator preparation; and Alicia Sneed, director of legal services, represented the board.

A motion was made and seconded to approve the following amendments: to amend the NECESSITY, FUNCTION, AND CONFORMITY paragraph and Sections 2 and 6 through 9 to comply with the drafting and formatting requirements of KRS Chapter 13A. Without objection, and with agreement of the agency, the amendments were approved.

Educator Preparation

16 KAR 5:040. Admission, placement, and supervision in student teaching.

A motion was made and seconded to approve the following amendments: (1) to amend the NECESSITY, FUNCTION, AND CONFORMITY paragraph and Sections 2, 3, 6, and 7 to comply with the drafting and formatting requirements of KRS Chapter 13A; and (2) to create a new Section 8 to incorporate by reference the Instructions for Electronic Payment Vouchers. Without objection, and with agreement of the agency, the amendments were approved.

Alternative Routes to Certification

16 KAR 9:090. University-based alternative certification program for teachers of world languages.

A motion was made and seconded to approve the following amendments: to amend the TITLE, the RELATES TO, STATUTORY AUTHORITY, and NECESSITY, FUNCTION, AND CONFORMITY paragraphs, and Sections 1 through 4 and 6 through 9 to comply with the drafting and formatting requirements of KRS Chapter 13A. Without objection, and with agreement of the agency, the amendments were approved.

PERSONNEL BOARD: Board

101 KAR 1:375. Employee grievances and complaints. Mark Sipek, executive director, represented the board.

A motion was made and seconded to approve the following amendments: (1) to amend the RELATES TO and STATUTORY AUTHORITY paragraphs to correct statutory citations; (2) to amend the NECESSITY, FUNCTION, AND CONFORMITY paragraph to clearly state the necessity for and function served by this administrative regulation, as required by KRS 13A.220; (3) to amend Sections 1 through 4 to comply with the drafting and formatting requirements of KRS Chapter 13A; and (4) to create a new Section 5 to incorporate by reference the updated Grievance Form. Without objection, and with agreement of the agency, the amendments were approved.

PERSONNEL CABINET: Personnel Cabinet, Classified

101 KAR 2:046. Applications, qualifications and examinations. Dinah Bevington, general counsel, represented the cabinet.

A motion was made and seconded to approve the following amendments: to amend Sections 4, 9, and 12 and the application form incorporated by reference to comply with the drafting requirements of KRS Chapter 13A. Without objection, and with agreement of the agency, the amendments were approved.

101 KAR 2:056. Registers.

A motion was made and seconded to approve the following amendments: to amend the RELATES TO paragraph, Sections 2 and 8, and the application form incorporated by reference to comply with the drafting requirements of KRS Chapter 13A. Without objection, and with agreement of the agency, the amendments were approved.

101 KAR 2:105. Sick leave sharing procedures.

A motion was made and seconded to approve the following amendments: to amend Sections 1 through 4 to comply with the drafting requirements of KRS Chapter 13A. Without objection, and with agreement of the agency, the amendments were approved.

101 KAR 2:106. Annual leave sharing procedures.

A motion was made and seconded to approve the following amendments: (1) to amend the RELATES TO paragraph to correct a statutory citation; and (2) to amend Sections 2, 3, and 4, and the application form incorporated by reference, to comply with the drafting requirements of KRS Chapter 13A. Without objection, and with agreement of the agency, the amendments were approved.

GENERAL GOVERNMENT CABINET: State Board of Licensure for Professional Engineers and Land Surveyors: Board

201 KAR 18:192. Continuing professional development for professional land surveyors. Jonathan Buckley, general counsel, and David Cox, executive director, represented the board.

A motion was made and seconded to approve the following amendments: to amend Sections 1 and 5 to correct minor drafting errors. Without objection, and with agreement of the agency, the amendments were approved.

Board of Physical Therapy: Board

201 KAR 22:020. Eligibility and credentialing procedure. Becky Klusch, executive director, and Mark Brengelman, assistant attorney general, represented the board.

A motion was made and seconded to approve the following amendment: to amend Section 4 to correct minor drafting errors. Without objection, and with agreement of the agency, the amendment was approved.

Board of Respiratory Care: Board

201 KAR 29:050. Continuing education requirements. Tamara McDaniel, RRT, chair; Robert W. Powell, M.D., board member; and Janet Vogt, RRT, board member, represented the board.

In response to questions by Representative Ford, Ms. McDaniel stated that there was a national association of respiratory care and that the board presented this administrative regulation to the state association at the state meeting. There were no negative comments from the association regarding the proposal. The previous version of this administrative regulation established that a maximum of fifteen (15) percent of licensees would be audited. In order to raise standards and approximate the requirements of surrounding states, this administrative regulation amended the fifteen (15) percent to be a minimum, rather than a maximum.

A motion was made and seconded to approve the following amendments: (1) to amend Sections 5, 6, and 8 through 11 to clarify requirements; (2) to amend Section 6 to specify that academic courses shall be post-approved after completion of the course to qualify as continuing education; and (3) to amend the STATUTORY AUTHORITY paragraph and Sections 1, 3, 4, 5, 7, 8, and 12 to comply with the drafting and formatting requirements of KRS Chapter 13A. Without objection, and with agreement of the agency, the amendments were approved.

Kentucky Applied Behavior Analysis Licensing Board: Board

201 KAR 43:010 & E. Licensed behavior analyst or licensed assistant behavior analyst: application procedures. Scott Brinkman, board member, and Mark Brengelman, assistant attorney general, represented the board.

A motion was made and seconded to approve the following amendments: (1) to amend the TITLE; the RELATES TO, STATUTORY AUTHORITY, and NECESSITY, FUNCTION, AND CONFORMITY paragraphs; and Sections 1 through 4 to comply with the drafting and formatting requirements of KRS Chapter 13A; and (2) to amend the form incorporated by reference for conformity. Without objection, and with agreement of the agency, the amendments were approved.

201 KAR 43:020 & E. Temporary licensed behavior analyst or temporary licensed assistant behavior analyst: application procedures.

A motion was made and seconded to approve the following amendments: (1) to amend the TITLE; the RELATES TO, STATUTORY AUTHORITY, and NECESSITY, FUNCTION, AND CONFORMITY paragraphs; and Sections 1 through 4 to comply with the drafting and formatting requirements of KRS Chapter 13A; and (2) to amend the form incorporated by reference for conformity. Without objection, and with agreement of the agency, the amendments were approved.

201 KAR 43:030 & E. Fees.

A motion was made and seconded to approve the following amendments: (1) to amend the RELATES TO; STATUTORY AUTHORITY; and NECESSITY, FUNCTION, AND CONFORMITY paragraphs; and Sections 1, 2, and 3 to comply with the drafting and formatting requirements of KRS Chapter 13A; (2) to amend Section 2 to specify that the licensure renewal fee for each subsequent renewal period for licensed assistant behavior analysts shall be $200; and (3) to amend Section 3 to specify that the nonrefundable application review fee and the temporary licensure fee for a two (2) year temporary licensure period for assistant behavior analysts shall each be $100. Without objection, and with agreement of the agency, the amendments were approved.

201 KAR 43:040 & E. Code of ethical standards and standards of practice.

A motion was made and seconded to approve the following amendments: to amend the RELATES TO; STATUTORY AUTHORITY; and NECESSITY, FUNCTION, AND CONFORMITY paragraphs; and Sections 1 through 4, 7, 10, and 11 to comply with the drafting and formatting requirements of KRS Chapter 13A. Without objection, and with agreement of the agency, the amendments were approved.

TOURISM, ARTS AND HERITAGE CABINET: Department of Fish and Wildlife Resources: Game

301 KAR 2:228. Sandhill crane hunting requirements. Margaret Everson, assistant attorney general; Jon Gassett, commissioner; and Karen Waldrop, director, Wildlife Division, represented the department. Chet Hayes, executive director, United Trappers of Kentucky; Mark Nethery, president, League of Kentucky Sportsmen; and Barry Welty, chair, Kentucky Ducks Unlimited Conservation, appeared in support of this administrative regulation. Carol Besse, president, Kentucky Ornithological Society, and James Daniel, hunter, appeared in opposition to this administrative regulation.

Mr. Nethery stated that he was the president of the League of Kentucky Sportsmen and was appearing on behalf of approximately twenty (20) organizations. He stated that statistics showed there were about 60,000 sandhill cranes, which was plenty for continued population protection. The sandhill crane had historically been classified as a game bird in Kentucky. Currently, the sandhill crane was legally huntable in thirteen (13) other states. U. S. Fish and Wildlife developed a management plan that allowed for 800 birds to be taken yearly in Kentucky; however, this administrative regulation was conservative and allowed for 400 birds to be taken yearly. The impact on other species was addressed in this administrative regulation by requirements for a species identification test and by establishing the hunting season after the whooping crane migration. Sportsmen paid for conservation in Kentucky, and no species failed because of harvesting after a hunting management plan was developed.

Mr. Hayes, a Northern Kentucky outdoorsman and hunter, stated that the purpose of the Kentucky Department of Fish and Wildlife

Resources was to balance and regulate the uses of Kentucky's natural resources. This had to be accomplished with limited funding. He believed that a seasonal hunt of the sandhill crane would yield the same success as the elk program, resulting in restoration of the species.

Mr. Welty stated that Kentucky Ducks Unlimited Conservation fully supported this administrative regulation.

In response to a question by Co-Chair Bowen, Mr. Hayes stated that a prospective hunter of the sandhill crane was first required to pass a species identification test to avoid impact on other species, such as the great blue heron or the whooping crane. Mr. Nethery added that the sandhill hunting season was after the whooping crane had already migrated out of Kentucky.

Ms. Besse stated that vast numbers of people were opposed to this administrative regulation; however, they had not come to this Subcommittee meeting because they had been disheartened and fatigued by the process and how the Department for Fish and Wildlife Resources had framed their concerns.

Co-Chair Bowen stated that the promulgation process for administrative regulations was established by KRS Chapter 13A. He asked that comments be concise and limited to the subject matter, rather than the promulgation process required by law.

Ms. Besse stated that the Department for Fish and Wildlife Resources first proposed this policy in June 2010; however, the policy was not available to the public until January 2011. The department framed the issue as a pro-hunting versus anti-hunting and anti-firearm discussion. Opposition to this administrative regulation was not anti-hunting or anti-firearm. The department distorted and misrepresented opposition to hunting the sandhill crane. True public discussion never took place. This administrative regulation was flawed public policy. This Subcommittee meeting was the first neutral arbitration of this administrative regulation because other meetings were held by the department and were biased.

Co-Chair Bowen stated that Subcommittee members followed this issue throughout the promulgation process and had also received numerous comments from constituents. Ms. Besse clarified that this Subcommittee had properly followed the administrative regulation process as established by law, but that other meetings conducted by the Department for Fish and Wildlife Resources were not neutral. Ms. Besse stated that she was not anti-hunting.

Mr. Daniel stated that he was not anti-hunting, but he was concerned about the potential for misidentification of species. He believed that the Department for Fish and Wildlife Resources mischaracterized opposition to the hunting of the sandhill crane. He stated that science did not support hunting the sandhill crane, and the department's funding may be negatively affected by this decision. Some groups that currently funded the department may choose no longer to do so because of their opposition to the hunting of the sandhill crane. Thirty-five (35) percent of the department's funding comes from non-hunting sources. Hunting was expected to decline in Kentucky. Mr. Daniel asked rhetorically if hunting declined in Kentucky, how would the department fund conservation? Wildlife viewing, by the department's own data, was the strongest, growing portion of wildlife-related activity, and the sandhill crane was the most watchable bird in Kentucky.

Senator Givens stated that this Subcommittee was neutral and provided a voice to all interested parties. In response to questions by Senator Givens, Ms. Besse clarified that the department's position, not the promulgation process, was where her secondary opposition lie. This Subcommittee did not violate the statutory process established in KRS Chapter 13A. Ms. Besse believed that the department never intended to entertain public comments in a serious manner. Mr. Daniel stated that the department mischaracterized the opposition's concerns as being anti-hunting and anti-firearm, rather than presenting their true concerns regarding the protection of the sandhill crane. He stated that the department issued fliers describing opposition to this administrative regulation as anti-hunting and anti-firearm.

Mr. Gassett stated that the Department for Fish and Wildlife Resources followed the promulgation process established in KRS Chapter 13A and held a public hearing prior to this administrative regulation being filed with LRC. The department also met independently with the Sandhill Crane Coalition and the Kentucky Ornithological Society. He stated that the department did promote hunting, which was the agency's main task. He disputed Mr. Daniel's statement that thirty-five (35) percent of the department's funding came from non-hunting sources by explaining that certain miscellaneous fund sources related indirectly to hunting, such as licensing of equipment. Less than $100,000 came from non-hunting sources. The department received hundreds of letters from animal rights groups, which were usually considered anti-hunting; therefore, the department did characterize this administrative regulation as a pro-hunting issue. This administrative regulation established a very conservative hunting season with safety triggers to protect the species from misidentification. Additionally, annual review of the program was mandatory, and scientists determined that the sandhill crane population would continue to grow if Kentucky allowed this administrative regulation to become effective.

In response to questions by Co-Chair Bell, Mr. Gassett stated that there were refuge sites established in this administrative regulation to protect crane-roosting areas. These protected areas were streams that flowed into Barren Lake.

Co-Chair Bell stated that the Department for Fish and Wildlife Resources had done a great job with new hunting programs and with restoring other species, such as the wild turkey. In response to a question by Co-Chair Bell, Mr. Gassett stated that thirty-one (31) states constituted the flyway zone for the sandhill crane. Many citizens of states in the flyway zones other than Kentucky submitted comments regarding this administrative regulation. Some comments supported this administrative regulation, and some were opposed to it. Most of the comments came from Tennessee.

GENERAL GOVERNMENT CABINET: Department of Agriculture: Division of Agriculture Marketing: Ginseng

302 KAR 45:010 & E. Ginseng, general provisions. Clint Quarles, staff attorney; Anna M. Lucio, marketing specialist; and Mac Stone, executive director, represented the division.

In response to questions by Senator Givens, Mr. Stone stated that initial drafting of this administrative regulation began in 2004 and 2005 after a sting operation illuminated problems with the previous version of this administrative regulation. The requirements were not practically enforceable and were not specific enough. The ginseng-harvesting industry brought millions of dollars to rural parts of Kentucky and worked with the department in developing this administrative regulation.

In response to questions by Representative Ford, Ms. Lucio stated that this administrative regulation required licensing for buyers only. Hunters had season changes to protect long-term sustainability of ginseng, and the plants had to be a minimum age before harvesting. The division was developing educational materials to assist in enforcement of this administrative regulation. It took seven (7) to ten (10) years from the time of planting to harvesting.

In response to a question by Representative Lee, Ms. Lucio stated that most ginseng harvested in Kentucky was exported to Hong Kong. The current market value for ginseng was $400 per dry pound.

A motion was made and seconded to approve the following

amendments: (1) to amend the TITLE for clarification; (2) to amend the RELATES TO and STATUTORY AUTHORITY paragraphs to include additional relevant citations; (3) to amend Section 7 to establish the filing deadline for the required purchase forms; (4) to amend Section 9 to specify appeal procedures if cited for a ginseng regulatory violation; (5) to amend the NECESSITY, FUNCTION, AND CONFORMITY paragraph to clearly state the necessity for and function served by this administrative regulation, as required by KRS 13A.220; and (6) to amend Sections 1 through 11 to clarify requirements and to comply with the drafting and formatting requirements of KRS Chapter 13A. Without objection, and with agreement of the agency, the amendments were approved.

JUSTICE AND PUBLIC SAFETY CABINET: Department of Corrections: Sex Offender Risk Assessment Advisory Board: Office of the Secretary

501 KAR 6:220. Treatment for sex offenders. Amy Barker, assistant general counsel, represented the office.

A motion was made and seconded to approve the following amendments: (1) to amend Sections 3 and 4 to clarify that the providers shall provide at a minimum the number of treatment sessions listed; and (2) to amend Sections 2 through 5 to comply with the drafting and formatting requirements of KRS Chapter 13A. Without objection, and with agreement of the agency, the amendments were approved.

Department of State Police: Concealed Deadly Weapons

502 KAR 11:010. Application for license to carry concealed deadly weapon. Graham Gray, attorney; Heather Wagers, staff attorney; and Morgain Sprague, legal counsel, represented the department.

In response to a question by Representative Ford, Mr. Gray stated that there was an identification card for retired officers. The card was regulated by the federal program. Amendments were made to this administrative regulation in response to program changes at the federal level, including that "duration of employment" included events such as resignation, as well as retirement.

A motion was made and seconded to approve the following amendments: (1) to amend Section 6 to delete the requirement that the application shall be completed and signed in the presence of the sheriff; and (2) to amend Section 12 to: (a) comply with the drafting requirements of KRS Chapter 13A; and (b) revise material incorporated by reference. Without objection, and with agreement of the agency, the amendments were approved.

502 KAR 11:050. Updating, replacement, and renewal of license to carry concealed deadly weapon.

A motion was made and seconded to approve the following amendments: (1) to amend Sections 2 and 3 to delete the requirements that the change of personal information form and the request for duplicate license form shall be completed and signed in the presence of the sheriff; (2) to amend Section 7 to delete the requirement that a late fee waiver shall be requested by a licensee whose license expired during an overseas military deployment; and (3) to amend Sections 1, 2, and 5 through 8 to comply with the drafting and formatting requirements of KRS Chapter 13A. Without objection, and with agreement of the agency, the amendments were approved.

Technical Services Division: Law Enforcement Officers Safety Act of 2004

502 KAR 13:010. Application for certification under the Law Enforcement Officers Safety Act of 2004 ("LEOSA"), 18 U.S.C. 926C, for honorably retired elected or appointed peace officers. Graham Gray, attorney, and Heather Wagers, staff attorney, represented the division.

A motion was made and seconded to approve the following amendments: (1) to amend Section 5 to delete the requirement that the application form shall be completed in the presence of the sheriff; and (2) to amend the RELATES TO paragraph and Sections 1, 5, 6, and 7 to comply with the drafting and formatting requirements of KRS Chapter 13A. Without objection, and with agreement of the agency, the amendments were approved.

502 KAR 13:040. Issuance, expiration, and renewal of certification to carry a concealed deadly weapon pursuant to the Law Enforcement Officers Safety Act of 2004 ("LEOSA"), 18 U.S.C. 926C, for honorably retired elected or appointed peace officers.

A motion was made and seconded to approve the following amendments: to amend Sections 4 and 6 to clarify requirements. Without objection, and with agreement of the agency, the amendments were approved.

502 KAR 13:070. Applicant photograph requirements for certification to carry a concealed deadly weapon pursuant to the Law Enforcement Officers Safety Act of 2004 ("LEOSA"), 18 U.S.C. 926C, for honorably retired elected or appointed peace officers.

A motion was made and seconded to approve the following amendments: to amend Section 2 to comply with the drafting and formatting requirements of KRS Chapter 13A. Without objection, and with agreement of the agency, the amendments were approved.

PUBLIC PROTECTION CABINET: Department of Insurance: Agent Licensing Division: Agents, Consultants, Solicitors, and Adjusters

806 KAR 9:020. False or deceptive names, titles, prohibited. Sandy Chapman, assistant director; D. J. Wasson, staff assistant; and Maggie Woods, director of agent licensing, represented the division.

A motion was made and seconded to approve the following amendments: (1) to amend the RELATES TO paragraph to add statutory citations; and (2) to amend Sections 1, 2, 3, 5, and 6 to comply with the drafting and formatting requirements of KRS Chapter 13A. Without objection, and with agreement of the agency, the amendments were approved.

Department of Housing, Buildings and Construction: Division of Building Codes Enforcement: Elevator Safety

815 KAR 4:010 & E. Annual inspection of elevators. Dawn M. Bellis, general counsel, and George Mann, deputy commissioner, represented the division.

In response to questions by Representative Ford, Ms. Bellis stated that the inspection fee was for initial installation only, which was usually requested by the homeowner or installing contractor. Although it would increase fees, a homeowner may want the inspection for safety.

A motion was made and seconded to approve the following amendments: to amend Sections 1 and 2 to: (1) clarify requirements; and (2) comply with the drafting and formatting requirements of KRS Chapter 13A. Without objection, and with agreement of the agency, the amendments were approved.

815 KAR 4:025 & E. Permit fees for new and altered elevators.

A motion was made and seconded to approve the following amendments: (1) to amend the STATUTORY AUTHORITY paragraph to correct inconsistencies between the currently effective administrative regulation and the filed proposed administrative regulation; and (2) to amend Sections 1, 2, 3, 5, 6, 8, and 9 to comply with the drafting and formatting requirements of

KRS Chapter 13A. Without objection, and with agreement of the agency, the amendments were approved.

815 KAR 4:030 & E. Elevator contractor licensing requirements.

A motion was made and seconded to approve the following amendments: (1) to amend the RELATES TO paragraph to add a statutory citation; (2) to amend the NECESSITY, FUNCTION, AND CONFORMITY paragraph to clearly state the necessity for and function served by this administrative regulation, as required by KRS 13A.220; (3) to amend Sections 1 through 8 to comply with the drafting and formatting requirements of KRS Chapter 13A; and (4) to amend Section 8 to revise the form incorporated by reference. Without objection, and with agreement of the agency, the amendments were approved.

815 KAR 4:040 & E. Elevator mechanic licensing requirements.

A motion was made and seconded to approve the following amendments: (1) to amend the NECESSITY, FUNCTION, AND CONFORMITY paragraph to make a technical correction; (2) to amend Sections 1, 2, 4, and 7 to comply with the drafting and formatting requirements of KRS Chapter 13A; and (3) to amend Section 7 to revise the form incorporated by reference. Without objection, and with agreement of the agency, the amendments were approved.

815 KAR 4:050 & E. Continuing education requirements for elevator contractors and elevator mechanics.

A motion was made and seconded to approve the following amendments: (1) to amend the STATUTORY AUTHORITY and NECESSITY, FUNCTION, AND CONFORMITY paragraphs to correct statutory citations; and (2) to amend Sections 1, 2, 4, and 6 to comply with the drafting and formatting requirements of KRS Chapter 13A. Without objection, and with agreement of the agency, the amendments were approved.

815 KAR 4:060 & E. Requirements for approval of continuing education courses and providers.

A motion was made and seconded to approve the following amendments: (1) to amend the STATUTORY AUTHORITY paragraph to add a statutory citation; (2) to amend the NECESSITY, FUNCTION, AND CONFORMITY paragraph to clearly state the necessity for and function served by this administrative regulation, as required by KRS 13A.220; (3) to amend Sections 1 through 3 to comply with the drafting and formatting requirements of KRS Chapter 13A; and (4) to amend Section 6 to revise the forms incorporated by reference. Without objection, and with agreement of the agency, the amendments were approved.

815 KAR 4:070 & E. Fees and refunds.

Kentucky Building Code

815 KAR 7:120. Kentucky Building Code.

A motion was made and seconded to approve the following amendments: (1) to amend the NECESSITY, FUNCTION, AND CONFORMITY paragraph to clearly state the necessity for and function served this administrative regulation, as required by KRS 13A.220; and (2) to amend Sections 1 and 3 to comply with the drafting and formatting requirements of KRS Chapter 13A. Without objection, and with agreement of the agency, the amendments were approved.

Division of Heating, Ventilation and Air Conditioning: Heating, Ventilation, and Air Conditioning Licensing Requirements

815 KAR 8:007. Kentucky Board of Heating, Ventilation, and Air Conditioning (HVAC) contractors budget review and responsibility.

A motion was made and seconded to approve the following amendments: (1) to amend the STATUTORY AUTHORITY paragraph to add a statutory citation; and (2) to amend the NECESSITY, FUNCTION, AND CONFORMITY paragraph to clearly state the necessity for and function served by this administrative regulation, as required by KRS 13A.220. Without objection, and with agreement of the agency, the amendments were approved.

CABINET FOR HEALTH AND FAMILY SERVICES: Office of Health Policy: Certificate of Need

900 KAR 6:030. Certificate of need expenditure minimums. Chandra Venettozzi, health data administrator, represented the office.

A motion was made and seconded to approve the following amendments: to amend the RELATES TO paragraph and Section 1 to correct typographical errors. Without objection, and with agreement of the agency, the amendments were approved.

900 KAR 6:080. Certificate of Need emergency circumstances.

A motion was made and seconded to approve the following amendments: to amend Sections 1 and 2 to comply with the drafting requirements of KRS Chapter 13A. Without objection, and with agreement of the agency, the amendments were approved.

Department for Public Health: Division of Public Health Protection and Safety: Mobile Homes and Recreational Vehicles Parks; Facilities Standards

902 KAR 15:020 & E. Recreational vehicles. Vonia Grabeel, supervisor, Facilities Section, and Ken Spach, branch manager, represented the division.

A motion was made and seconded to approve the following amendments: (1) to amend the RELATES TO and STATUTORY AUTHORITY paragraphs to add citations; (2) to amend the NECESSITY, FUNCTION, AND CONFORMITY paragraph to clearly state the necessity for and function served by this administrative regulation, as required by KRS 13A.220; (3) to amend Section 4 to update lighting requirements commensurate with recent technological advances; (4) to amend Sections 1 through 18 and 20 through 23 to comply with the drafting and formatting requirements of KRS Chapter 13A; and (5) to amend Sections 2, 3, 5, 7 through 12, and 20 to correct inconsistencies between the currently effective administrative regulation and the filed proposed administrative regulation. Without objection, and with agreement of the agency, the amendments were approved.

Radiology

902 KAR 100:019. Standards for protection against radiation. Matt McKinley, director, Kentucky Radiation Ion Program, and Marissa Vega Velez, radiation health specialist, represented the division.

A motion was made and seconded to approve the following amendments: (1) to amend the STATUTORY AUTHORITY paragraph to delete a superfluous statutory citation; (2) to amend the NECESSITY, FUNCTION, AND CONFORMITY paragraph to clearly state the necessity for and function served by this administrative regulation, as required by KRS 13A.220; and (3) to amend Sections 2, 3, 4, 6, 9 through 13, 16, 18 through 21, 24 through 36, 38 through 41, and 43 through 45 to comply with the drafting and formatting requirements of KRS Chapter 13A. Without objection, and with agreement of the agency, the amendments were approved.

902 KAR 100:022. Licensing requirements for land disposal of radioactive waste.

A motion was made and seconded to approve the following amendments: (1) to amend the RELATES TO paragraph to add citations; and (2) to amend Sections 1, 2, 3, 6, 7, 14, 27, 32, and 33 to comply with the drafting and formatting requirements of KRS Chapter 13A. Without objection, and with agreement of the agency, the amendments were approved.

902 KAR 100:040. General provisions for specific licenses.

A motion was made and seconded to approve the following amendments: (1) to amend the STATUTORY AUTHORITY paragraph to correct statutory citations; (2) to amend the NECESSITY, FUNCTION, AND CONFORMITY paragraph to clearly state the necessity for and function served by this administrative regulation, as required by KRS 13A.220; (3) to amend Sections 1 through 5, 12, 13, and 15 to comply with the drafting and formatting requirements of KRS Chapter 13A; and (4) to amend Section 16 to revise material incorporated by reference. Without objection, and with agreement of the agency, the amendments were approved.

902 KAR 100:042. Decommissioning and financial surety.

A motion was made and seconded to approve the following amendments: (1) to amend the RELATES TO and STATUTORY AUTHORITY paragraphs to correct citations; (2) to amend Sections 8, 11, 14, and 16 to comply with the drafting and formatting requirements of KRS Chapter 13A; (3) to amend Section 11 to correct a deadline; and (4) to amend Section 14 to correct a unit of measurement. Without objection, and with agreement of the agency, the amendments were approved.

902 KAR 100:100. Industrial radiography.

A motion was made and seconded to approve the following amendments: (1) to amend the STATUTORY AUTHORITY paragraph to delete a citation; (2) to amend the NECESSITY, FUNCTION, AND CONFORMITY paragraph to clearly state the necessity for and function served by this administrative regulation, as required by KRS 13A.220; and (3) to amend Sections 1, 2, 12, 13, 14, 16, and 21 to comply with the drafting and formatting requirements of KRS Chapter 13A. Without objection, and with agreement of the agency, the amendments were approved.

Department for Medicaid Services: Division of Community Alternatives: Medicaid Services

907 KAR 1:595 & E. Model Waiver II service coverage and reimbursement. Stuart Owen, regulation coordinator, represented the division.

A motion was made and seconded to approve the following amendments: (1) to amend the RELATES TO paragraph to correct statutory citations; and (2) to amend Sections 1 through 11 to comply with the drafting and formatting requirements of KRS Chapter 13A. Without objection, and with agreement of the agency, the amendments were approved.

Department for Community Based Services: Division of Family Support: K-TAP, Kentucky Works, Welfare to Work, State Supplementation

921 KAR 2:050. Time and manner of payments. Elizabeth Caywood, internal policy analyst, represented the division.

Division of Protection and Permanency: Child Welfare

922 KAR 1:490. Background checks for foster and adoptive parents, caretaker relatives, kinship caregivers, and reporting requirements.

A motion was made and seconded to approve the following amendments: to amend Sections 2 and 7 and the material incorporated by reference to comply with the drafting requirements of KRS Chapter 13A. Without objection, and with agreement of the agency, the amendments were approved.

The following administrative regulations were deferred to the November 7, 2011, meeting of the Subcommittee:

PERSONNEL CABINET: Personnel Cabinet, Classified

101 KAR 2:180. Employee performance evaluation system.

FINANCE AND ADMINISTRATION CABINET: Department of Revenue: Ad Valorem Tax; State Assessment

103 KAR 8:010. Watercraft allocation.

GENERAL GOVERNMENT CABINET: Real Estate Appraisers Board: Board

201 KAR 30:330 & E. Application for registration.

ENERGY AND ENVIRONMENT CABINET: Office of the Secretary: Kentucky State Nature Preserves Commission: Commission

400 KAR 2:090. Management, use, and protection of nature preserves.

TRANSPORTATION CABINET: Office of Transportation Delivery: Mass Transportation

603 KAR 7:080. Human service transportation delivery.

CABINET FOR HEALTH AND FAMILY SERVICES: Department for Developmental Health, Developmental and Intellectual: Disabilities: Division of Behavioral Health: Substance Abuse

908 KAR 1:310. Certification standards and administrative procedures for driving under the influence programs. LeeEtta Cummings, DUI program manager, and Ijeoma Eneje, regulation coordinator, represented the division. Carl Boes, Kentucky Association of Regional Providers, appeared in opposition to this administrative regulation.

In response to questions by Representative Lee, Ms. Cummings stated that the changes to this administrative regulation were requested by the state auditor in order to make administrators more accountable. Important changes included a one-time six (6) hour mandatory training for program administrators and a system to provide feedback to assess the training program. Telecommunication was prohibited as a method to educate DUI clients because there was not conclusive evidence that telecommunication training was effective for behavioral health. The training was offered regionally by request of the program administrators, and the training personnel from the division traveled where needed to provide reasonably convenient training to program administrators. There were currently 118 DUI programs available at over 280 locations in Kentucky.

In response to a question by Senator Pendleton, Ms. Cummings stated that someone with a DUI conviction in Tennessee or another state, upon returning to Kentucky, would be under the jurisdiction of the Transportation Cabinet for determination if all penalties had been resolved. The determination was typically based on if the other state's requirements were commensurate with Kentucky standards. She stated that one of the previously approved curricula was deleted because it was not an evidence-based practice curriculum. The division presented information about the regulatory changes to advisory councils and at the statewide annual meeting. Strong support was received from most of the provider base.

In response to questions by Senator Givens, Ms. Cummings stated that without these amendments, this administrative

regulation did not place a limit on the number of educators a supervisor was allowed to supervise. The state auditor noted this as a problem during the initial audit. Facilities were required to have at least one (1) program administrator and to ensure training and credentials for all providers. Facilities were also required to have at least one (1) clinical services supervisor. The change to require a supervisor to supervise a maximum of six (6) educators was not expected to create new cost. The agency received five (5) public comments during the public comment period from one individual. One (1) comment addressed telecommunications. The agency required DUI intervention for offenders in person because scientific research was inconclusive as to efficacy. Interpersonal skills were omitted in a telecommunication session, but they were crucial to the success of the intervention. A second comment addressed limiting the number of educators a supervisor could supervise. This change was requested by providers and was based on legal precedents and on empirical workload manageability. The third comment addressed the six (6) hour training requirement. The fourth comment addressed the policy for a DUI offender who is impaired at the intervention session. The changes establish a procedure for dealing with such a situation. The last comment addressed the patient sign-in sheet. The sign-in sheet allowed the agency to enforce patient limits. Ms. Cummings stated that, without the proposed amendments, this administrative regulation allowed DUI intervention by telecommunication, rather than in person. There were two (2) facilities that the agency knew of who used telecommunications for this purpose. The agency was concerned that allowing DUI intervention via telecommunication may undermine the effectiveness of treatment. For example, it may be impossible in a telecommunication intervention session to determine if the offender was currently impaired.

In response to a question by Senator Pendleton, Ms. Cummings stated that it took so long to propose amendments to this administrative regulation after the state audit because it took two (2) years to gather feedback and data. Changes included changing the curriculum requirements to scientifically based standards, which took time to develop. Additionally, an advisory committee was formed. Most feedback had been positive.

In response to questions by Co-Chair Bell, Ms. Cummings stated that "inappropriate behavior" had been amended to mean behavior that violated the code of conduct. Someone from each program had to be certified through a one-time six (6) hour training that would be provided regionally across Kentucky. The training was free, and the agency reimbursed attendees for travel costs. The agency shifted responsibility for out-of-state DUI issues to the Transportation Cabinet. The purpose of DUI offender assessment was to impact intervention providers to provide accountability to ensure effective intervention. Each year the agency revoked certification of approximately three (3) providers. Some of the assessment changes were requested by providers.

Mr. Boes stated that DUI intervention should be allowed to be performed via telecommunication. Just because telecommunication had not been studied to determine efficacy did not mean that it was ineffective. Medicaid reimbursed for telecommunications psychiatry, known as teletherapy. This therapy was comparable to DUI intervention. Universities regularly granted diplomas based solely on telecommunication education.

In response to a question by Senator Pendleton, Mr. Boes stated that some providers had gotten a state grant for telecommunications equipment; however, it was not specific to DUI intervention.

A motion was made and seconded to approve the following amendments: (1) to amend the RELATES TO and STATUTORY AUTHORITY paragraphs to correct statutory citations; (2) to amend the NECESSITY, FUNCTION, AND CONFORMITY paragraph to clearly state the necessity for and function served by this administrative regulation, as required by KRS 13A.220; (3) to amend Sections 1 through 11 to comply with the drafting and formatting requirements of KRS Chapter 13A; and (4) to amend the items incorporated by reference to conform to this administrative regulation's provisions. Without objection, and with agreement of the agency, the amendments were approved.

A motion was made and seconded to defer consideration of this administrative regulation, as amended, to the November meeting of the Subcommittee in order for the agency to consider amending this administrative regulation further to grandfather facilities that already used telecommunications for DUI intervention. These facilities would serve as a pilot study to get adequate data to determine if this method was effective. Ms. Cummings agreed to the deferral. Without objection, and with agreement of the agency, this administrative regulation, as amended, was deferred to the November meeting of the Subcommittee.

Department for Community Based Services: Division of Protection and Permanency: Child Welfare

922 KAR 1:420. Child fatality or near fatality investigations.

The Subcommittee adjourned at 3:30 p.m. until November 7, 2011.

OTHER COMMITTEE REPORTS

COMPILER'S NOTE: In accordance with KRS 13A.290(9), the following reports were forwarded to the Legislative Research Commission by the appropriate jurisdictional committees and are hereby printed in the Administrative Register. The administrative regulations listed in each report became effective upon adjournment of the committee meeting at which they were considered.

INTERIM JOINT COMMITTEE ON NATURAL RESOURCES
Meeting on October 6, 2011

The following administrative regulations were available for consideration and placed on the agenda of the Interim Joint Committee on Natural Resources. for its meeting of October 6, 2011, having been referred to the Committee on October 5, 2011, pursuant to KRS 13A.290(6):

301 KAR 1:015
301 KAR 1:152
301 KAR 1:201
401 KAR 42:005
401 KAR 42:011
401 KAR 42:020
401 KAR 42:030
401 KAR 42:040
401 KAR 42:045
401 KAR 42:050
401 KAR 42:060
401 KAR 42:070
401 KAR 42:080
401 KAR 42:090
401 KAR 42:095
401 KAR 42:200
401 KAR 42:250
401 KAR 42:290
401 KAR 42:300
401 KAR 42:315
401 KAR 42:316
401 KAR 42:320
401 KAR 42:330
401 KAR 42:335
401 KAR 42:340
401 KAR 47:205
401 KAR 47:207
401 KAR 48:205
401 KAR 48:206
401 KAR 48:207
401 KAR 48:208

The following administrative regulations were found to be deficient pursuant to KRS 13A.290(7) and 13A.030(2):

None

The Committee rationale for each finding of deficiency is attached to and made a part of this memorandum.

The following administrative regulations were approved as amended at the Committee meeting pursuant to KRS 13A.320:

None

The wording of the amendment of each such administrative regulation is attached to and made a part of this memorandum.

The following administrative regulations were deferred pursuant to KRS 13A.300:

None

Committee activity in regard to review of the above-referenced administrative regulations is reflected in the minutes of the October 6, 2011 meeting, which are hereby incorporated by reference.

INTERIM JOINT COMMITTEE ON HEALTH AND WELFARE
Meeting on October 19, 2011

The following administrative regulations were available for consideration and placed on the agenda of the Interim Joint Committee on Health and Welfare for its meeting of October 19, 2011, having been referred to the Committee on October 5, 2011, pursuant to KRS 13A.290(6):

201 KAR 9:091
201 KAR 20:161
201 KAR 20:370
201 KAR 22:045
201 KAR 22:053
900 KAR 5:020 & E
908 KAR 3:060
921 KAR 2:040
921 KAR 3:090 & E

The following administrative regulations were found to be deficient pursuant to KRS 13A.290(7) and 13A.030(2):

None

The Committee rationale for each finding of deficiency is attached to and made a part of this memorandum.

The following administrative regulations were approved as amended at the Committee meeting pursuant to KRS 13A.320:

None

The wording of the amendment of each such administrative regulation is attached to and made a part of this memorandum.

The following administrative regulations were deferred pursuant to KRS 13A.300:

None

Committee activity in regard to review of the above-referenced administrative regulations is reflected in the minutes of the October 19, 2011 meeting, which are hereby incorporated by reference.

CUMULATIVE SUPPLEMENT

Locator Index - Effective Dates **E - 2**

The Locator Index lists all administrative regulations published in VOLUME 38 of the Administrative Register from July 2011 through June 2012. It also lists the page number on which each administrative regulation is published, the effective date of the administrative regulation after it has completed the review process, and other action which may affect the administrative regulation. NOTE: The administrative regulations listed under VOLUME 37 are those administrative regulations that were originally published in VOLUME 37 (last year's) issues of the Administrative Register but had not yet gone into effect when the 2011 bound Volumes were published.

KRS Index **E - 11**

The KRS Index is a cross-reference of statutes to which administrative regulations relate. These statute numbers are derived from the RELATES TO line of each administrative regulation submitted for publication in VOLUME 38 of the Administrative Register.

Technical Amendment Index **E - 17**

The Technical Amendment Index is a list of administrative regulations which have had technical, nonsubstantive amendments entered since being published in the 2011 bound Volumes. These technical changes have been made by the Regulations Compiler pursuant to KRS 13A.040(9) and (10) or 13A.312(2). Since these changes were not substantive in nature, administrative regulations appearing in this index will NOT be published in the Administrative Register. NOTE: Copies of the technically amended administrative regulations are available for viewing on the Legislative Research Commission Web site at http://www.lrc.ky.gov/home.htm.

Subject Index **E - 18**

The Subject Index is a general index of administrative regulations published in VOLUME 38 of the Administrative Register, and is mainly broken down by agency.

LOCATOR INDEX - EFFECTIVE DATES

VOLUME 37

The administrative regulations listed under VOLUME 37 are those administrative regulations that were originally published in Volume 37 (last year's) issues of the Administrative Register but had not yet gone into effect when the 2011 bound Volumes were published.

SYMBOL KEY:

* Statement of Consideration not filed by deadline
** Withdrawn, not in effect within 1 year of publication
*** Withdrawn before being printed in Register
**** Emergency expired after 180 days
(r) Repealer regulation: KRS 13A.310-on the effective date of an administrative regulation that repeals another, the regulations compiler shall delete the repealed administrative regulation and the repealing administrative regulation.

EMERGENCY ADMINISTRATIVE REGULATIONS:

(Note: Emergency regulations expire 180 days from the date filed; or 180 days from the date filed plus number of days of requested extension, or upon replacement or repeal, whichever occurs first.)

Regulation Number	37 Ky.R. Page No.	Effective Date
31 KAR 5:010E	2128	2-1-11
Replaced	2542	6-3-11
31 KAR 6:030E	2352	3-10-11
Replaced	2828	7-1-11
32 KAR 1:030E	1381	11-2-10
Replaced	2828	7-1-11
32 KAR 1:190E	1382	11-2-10
32 KAR 2:130E	2130	2-7-11
Replaced	2256	6-3-11
101 KAR 2:095E	2522	3-31-11
Replaced		(See 38 Ky.R.)
101 KAR 2:102E	2525	3-31-11
Replaced		(See 38 Ky.R.)
101 KAR 3:015E	2530	3-31-11
Replaced		(See 38 Ky.R.)
103 KAR 15:195E	2535	4-1-11
Replaced		(See 38 Ky.R.)
201 KAR 8:008E	2807	4-21-11
Expired		10-18-11
201 KAR 8:532E	2808	4-21-11
Replaced		(See 38 Ky.R.)
201 KAR 8:550E	2143	2-2-11
Replaced	2876	8-5-11
201 KAR 8:562E	2812	4-21-11
Replaced		(See 38 Ky.R.)
201 KAR 43:010E	2817	4-29-11
201 KAR 43:020E	2818	4-29-11
201 KAR 43:030E	2820	4-29-11
201 KAR 43:040E	2821	4-29-11
401 KAR 51:052E	2352	3-14-11
Replaced		8-4-11
815 KAR 10:070E	2824	5-10-11
Replaced		(See 38 Ky.R.)
900 KAR 5:020E	3005	5-6-11
Replaced		10-19-11
922 KAR 1:420E	1960	1-3-11
Expired	****	7-2-11

ORDINARY ADMINISTRATIVE REGULATIONS:

Regulation Number	37 Ky.R. Page No.	Effective Date
13 KAR 2:060		
Amended	2250	
As Amended	2539	
16 KAR 3:050		
Amended	1500	
As Amended	1963	
16 KAR 6:030		
Amended	2665	
31 KAR 5:010		
Amended	2254	
As Amended	2542	6-3-11
31 KAR 6:030		
Amended	2443	
As Amended	2828	7-1-11
32 KAR 1:030		
Amended	1502	
32 KAR 1:190		
Amended	1504	
32 KAR 2:130		
Amended	2256	
101 KAR 1:325		
Amended	2666	7-21-11
101 KAR 2:095		
Amended	2669	(See 38 Ky.R.)
101 KAR 2:102		
Amended	2672	(See 38 Ky.R.)
101 KAR 3:015		
Amended	2677	(See 38 Ky.R.)
102 KAR 1:178	2303	
103 KAR 3:010		
Amended	2258	
As Amended	2543	
103 KAR 3:030		
Amended	2263	
As Amended	2547	
103 KAR 3:040		
Amended	2273	
As Amended	2556	
103 KAR 3:050		
Amended	760	
103 KAR 15:195	2769	(See 38 Ky.R.)
201 KAR 3:045		
Amended	2891	
201 KAR 3:081*(r)*	3020	
201 KAR 3:090	3021	
201 KAR 8:532	3022	(See 38 Ky.R.)
201 KAR 8:550	2308	9-13-11
Amended	2876	8-5-11
201 KAR 8:560	626	
201 KAR 8:562	3027	(See 38 Ky.R.)
201 KAR 12:083		
Amended	2282	
As Amended	2829	7-1-11
201 KAR 20:056		
Amended	2892	(See 38 Ky.R.)
201 KAR 20:059		
Amended	2046	
201 KAR 20:062		
Amended	2895	8-17-11
201 KAR 20:070		
Amended	2900	8-17-11
201 KAR 20:110		
Amended	2902	8-17-11
201 KAR 20:215		
Amended	2905	8-17-11
201 KAR 20:225		
Amended	2907	8-17-11
201 KAR 20:240		
Amended	2909	8-17-11
201 KAR 20:310		
Amended	2911	8-17-11
201 KAR 20:411		
Amended	2913	8-17-11
201 KAR 20:470		(See 38 Ky.R.)
Amended	2915	8-17-11
201 KAR 26:115		
Amended	1511	
As Amended	1976	

Regulation Number	37 Ky.R. Page No.	Effective Date
201 KAR 26:121		
Amended	1513	
201 KAR 26:125		
Amended	1514	
As Amended	1977	
201 KAR 26:130		
Amended	1516	
As Amended	1977	
201 KAR 26:155		
Amended	1518	
As Amended	1978	
201 KAR 26:171		
Amended	1520	
As Amended	1979	
201 KAR 26:175		
Amended	1523	
201 KAR 26:180		
Amended	1526	
201 KAR 26:185		
Amended	1527	
As Amended	1982	
201 KAR 26:190		
Amended	1529	
As Amended	1983	
201 KAR 26:200		
Amended	1532	
As Amended	1984	
201 KAR 26:215		
Amended	1533	
201 KAR 26:230		
Amended	1535	
As Amended	1985	
201 KAR 26:270		
Amended	1537	
201 KAR 26:290		
Amended	1539	
201 KAR 26:310	1597	
As Amended	1987	
201 KAR 30:040		
Amended	101	
201 KAR 39:010	2507	
Withdrawn		9-15-11
201 KAR 39:030		
Amended	2451	
Withdrawn		9-15-11
201 KAR 39:040		
Amended	2453	
Withdrawn		9-15-11
201 KAR 39:050		
Amended	2453	
Withdrawn		9-15-11
201 KAR 39:060		
Amended	2457	
Withdrawn		9-15-11
201 KAR 39:070		
Amended	2459	
Withdrawn		9-15-11
201 KAR 39:080		
Amended	2460	
Withdrawn		9-15-11
201 KAR 39:090		
Amended	2461	
Withdrawn		9-15-11
201 KAR 39:100		
Amended	2464	
Withdrawn		9-15-11
201 KAR 39:120		
Amended	2466	
Withdrawn	9-15-11	
201 KAR 41:100	1112	
As Amended	1987	
201 KAR 42:010		
Amended	1009	
Amended	1695	
As Amended	1988	
201 KAR 42:020		
Amended	1011	
Amended	1696	
As Amended	1989	
201 KAR 42:030		
Amended	1012	
As Amended	1989	
201 KAR 42:035		
Amended	1013	
Amended	1697	
As Amended	1990	
201 KAR 42:040		
Amended	1015	
Amended	1699	
As Amended	1991	
201 KAR 42:050		
Amended	1016	
Amended	1700	
As Amended	1992	
201 KAR 42:060		
Amended	1018	
Amended	1702	
As Amended	1993	
201 KAR 42:070		
Amended	1020	
Amended	1704	
As Amended	1993	
201 KAR 42:080	1113	
Amended	1705	
As Amended	1994	
201 KAR 42:040	2700	
201 KAR 42:110		
Amended	1022	
As Amended	1996	
201 KAR 43:010	3031	(See 38 Ky.R.)
201 KAR 43:020	3032	
201 KAR 43:030	3034	
201 KAR 43:040	3035	
301 KAR 1:152	2772	
Withdrawn	7-8-11	
301 KAR 1:155		
Amended	2056	
Amended	2430	
As Amended	2565	
301 KAR 2:049		
Amended	228	
301 KAR 2:095		
Amended	2682	8-4-11
301 KAR 2:178		
Amended	2065	
As Amended	2568	
301 KAR 2:300		
Amended	2683	(See 38 Ky.R.)
400 KAR 2:090		
Amended	2920	
401 KAR 5:006		
Amended	1757	
Amended	2434	
401 KAR 8:020		
Amendment	2924	(See 38 Ky.R.)
401 KAR 10:030		
Amended	2071	
Amended	2655	8-5-211
401 KAR 42:005		
Amended	2686	(See 38 Ky.R.)
401 KAR 42:011		
Amended	2691	(See 38 Ky.R.)
401 KAR 42:020		
Amended	2693	(See 38 Ky.R.)

LOCATOR INDEX - EFFECTIVE DATES

Regulation Number	37 Ky.R. Page No.	Effective Date
401 KAR 42:030		
Amended	2696	(See 38 Ky.R.)
401 KAR 42:040		
Amended	2700	(See 38 Ky.R.)
401 KAR 42:045	2773	(See 38 Ky.R.)
401 KAR 42:050		
Amended	2702	(See 38 Ky.R.)
401 KAR 42:060		
Amended	2704	(See 38 Ky.R.)
401 KAR 42:070		
Amended	2706	(See 38 Ky.R.)
401 KAR 42:080		
Amended	2709	(See 38 Ky.R.)
401 KAR 42:090		
Amended	2711	(See 38 Ky.R.)
401 KAR 42:095	2775	(See 38 Ky.R.)
401 KAR 42:200		
Amended	2713	(See 38 Ky.R.)
401 KAR 42:250		
Amended	2715	(See 38 Ky.R.)
401 KAR 42:290		
Amended	2726	(See 38 Ky.R.)
401 KAR 42:300		
Amended	2729	(See 38 Ky.R.)
401 KAR 42:315	2777	10-6-11
401 KAR 42:316		
Amended	2731	(See 38 Ky.R.)
401 KAR 42:320		
Amended	2733	(See 38 Ky.R.)
401 KAR 42:330		
Amended	2735	(See 38 Ky.R.)
401 KAR 42:335		
Amended	2738	(See 38 Ky.R.)
401 KAR 42:340		
Amended	2739	(See 38 Ky.R.)
401 KAR 47:205	2778	(See 38 Ky.R.)
401 KAR 47:207	2781	(See 38 Ky.R.)
401 KAR 48:205	2784	(See 38 Ky.R.)
401 KAR 48:206	2788	(See 38 Ky.R.)
401 KAR 48:207	2792	(See 38 Ky.R.)
401 KAR 48:208	2795	(See 38 Ky.R.)
401 KAR 49:080		
Amended	1349	
Amended	1707	
401 KAR 51:052		
Amended	2470	8-4-11
500 KAR 8:010		
Amendment	2927	(See 38 Ky.R.)
501 KAR 2:020		
Amendment	2929	(See 38 Ky.R.)
501 KAR 2:040		
Amendment	2930	10-7-11
501 KAR 2:050		
Amendment	2932	10-7-11
501 KAR 2:060		
Amendment	2933	(See 38 Ky.R.)
501 KAR 2:070		
Amendment	2935	10-7-11
501 KAR 3:010		
Amendment	2936	(See 38 Ky.R.)
501 KAR 3:020		
Amendment	2938	(See 38 Ky.R.)
501 KAR 3:030		
Amendment	2940	(See 38 Ky.R.)
501 KAR 3:040		
Amendment	2942	(See 38 Ky.R.)
501 KAR 3:050		
Amendment	2943	(See 38 Ky.R.)
501 KAR 3:060		
Amendment	2949	(See 38 Ky.R.)
501 KAR 3:070		
Amendment	2951	(See 38 Ky.R.)
501 KAR 3:080		
Amendment	2952	(See 38 Ky.R.)
501 KAR 3:090		
Amendment	2954	(See 38 Ky.R.)
501 KAR 3:100		
Amendment	2956	(See 38 Ky.R.)
501 KAR 3:110		
Amendment	2958	(See 38 Ky.R.)
501 KAR 3:120		
Amendment	2959	(See 38 Ky.R.)
501 KAR 3:130		
Amendment	2961	(See 38 Ky.R.)
501 KAR 3:140		
Amendment	2964	(See 38 Ky.R.)
501 KAR 3:150		
Amendment	2966	(See 38 Ky.R.)
501 KAR 3:160	3038	(See 38 Ky.R.)
501 KAR 3:170	3040	(See 38 Ky.R.)
501 KAR 7:010		
Amended	2969	(See 38 Ky.R.)
501 KAR 7:020		
Amended	2970	(See 38 Ky.R.)
501 KAR 7:030		
Amended	2972	(See 38 Ky.R.)
501 KAR 7:040		
Amended	2973	(See 38 Ky.R.)
501 KAR 7:050		
Amended	2975	(See 38 Ky.R.)
501 KAR 7:060		
Amended	2978	(See 38 Ky.R.)
501 KAR 7:070		
Amended	2979	(See 38 Ky.R.)
501 KAR 7:080		
Amended	2981	(See 38 Ky.R.)
501 KAR 7:090		
Amended	2982	(See 38 Ky.R.)
501 KAR 7:100		
Amended	2984	10-7-11
501 KAR 7:110		
Amended	2985	(See 38 Ky.R.)
501 KAR 7:120		
Amended	2987	(See 38 Ky.R.)
501 KAR 7:130		
Amended	2989	(See 38 Ky.R.)
501 KAR 7:140		
Amended	2990	(See 38 Ky.R.)
501 KAR 7:150	3041	(See 38 Ky.R.)
501 KAR 13:010		
Amended	2992	(See 38 Ky.R.)
502 KAR 12:010		
Amended	1546	
As Amended	1997	
505 KAR 1:130		
Amended	2289	
Amended	2881	8-5-2011
601 KAR 1:018		
Amended	808	
As Amended	2000	
603 KAR 4:035		
Amended	2741	
Withdrawn	7-13-2011	
702 KAR 7:125		
Amended	2291	
As Amended	2572	
703 KAR 5:200	3042	
787 KAR 1:070		
Amended	2994	9-2-11
787 KAR 1:090		
Amended	2996	(See 38 Ky.R.)
787 KAR 1:210		
Amended	2898	(See 38 Ky.R.)
787 KAR 2:020		

Regulation Number	37 Ky.R. Page No.	Effective Date
Amended	1551	
803 KAR 25:089		
Amended	1078	
Amended	1492	
803 KAR 25:091		
Amended	1080	
As Amended	2005	
806 KAR 2:150	1938	
Amended	2438	
806 KAR 3:170		
Amended	2746	
806 KAR 9:220		
Amended	1554	(See 38 Ky.R.)
806 KAR 12:120		
Amended	2754	
806 KAR 13:120		
Amended	1557	
As Amended	2007	
806 KAR 44:010	1603	
As Amended	2010	
808 KAR 10:010		
Amended	2482	
As Amended	2836	7-1-11
808 KAR 10:030		
Amended	2484	
As Amended	2837	7-1-11
808 KAR 10:050		
Amended	2487	
As Amended	2839	7-1-11
808 KAR 10:200		
Amended	2488	
As Amended	2839	7-1-11
808 KAR 10:240		
Amended	2492	
As Amended	2842	7-1-11
808 KAR 10:260		
Amended	2493	
As Amended	2842	7-1-11
808 KAR 10:280		
Amended	2494	
As Amended	2843	7-1-11
808 KAR 10:410		
Amended	2498	
As Amended	2845	7-1-11
808 KAR 10:440		
Amended	2500	
As Amended	2847	7-1-11
808 KAR 10:450		
Amended	2503	
As Amended	2849	7-1-11
808 KAR 10:480	2509	
As Amended	2850	7-1-11
808 KAR 10:490	2511	
As Amended	2851	7-1-11
810 KAR 1:001		
Amended	825	
As Amended	2852	7-1-11
810 KAR 1:011		
Amended	828	
As Amended	2855	7-1-11
810 KAR 1:120	895	
As Amended	2859	7-1-11
811 KAR 1:005		
Amended	834	
As Amended	2860	7-1-11
Reprint		(See 38 Ky.R.)
811 KAR 1:125		
Amended	837	
As Amended	2862	7-1-11
811 KAR 1:240	1130	
Amended	1720	
As Amended	2013	
811 KAR 1:250	898	
As Amended	2871	7-1-11
811 KAR 1:280	2318	
As Amended	2575	
811 KAR 2:010		
Amended	847	
As Amended	2872	7-1-11
Reprint		(See 38 Ky.R.)
811 KAR 2:060		
Amended	851	7-1-11
811 KAR 2:150	1136	
Amended	1723	
As Amended	2015	
811 KAR 2:160	900	7-1-11
811 KAR 2:180	2328	
As Amended	2584	
811 KAR 2:190	2338	
Amended	2883	(See 38 Ky.R.)
815 KAR 7:120		
Amended	1092	
Amended	1727	
815 KAR 7:125		
Amended	1095	
Amended	1729	
815 KAR 10:070	3045	(See 38 Ky.R.)
815 KAR 20:030		
Amended	2757	
815 KAR 20:034		
Amended	1568	
As Amended	2017	
815 KAR 20:070		
Amended	2759	8-5-11
815 KAR 35:060		
Amended	3000	(See 38 Ky.R.)
815 KAR 35:100		
Amended	3002	(See 38 Ky.R.)
900 KAR 5:020		
Amended	3005	10-19-11
900 KAR 6:030		
Amended	2762	(See 38 Ky.R.)
900 KAR 7:030		
Amended	2763	(See 38 Ky.R.)
902 KAR 8:160		
Amended	3006	(See 38 Ky.R.)
902 KAR 8:165		
Amended	3010	(See 38 Ky.R.)
902 KAR 8:170		
Amended	3012	(See 38 Ky.R.)
902 KAR 20:410	1142	
Amended	1731	
As Amended	2019	
902 KAR 100:010		
Amended	1799	
As Amended	2594	
902 KAR 100:021		
Amended	1814	
As Amended	2607	
902 KAR 100:058		
Amended	1820	
As Amended	2612	
902 KAR 100:070		
Amended	1827	
As Amended	2618	
902 KAR 100:072		
Amended	1837	
As Amended	2627	
902 KAR 100:165		
Amended	1863	
As Amended	2651	
907 KAR 1:014		
Amended	551	
As Amended	984	

Regulation Number	37 Ky.R. Page No.	Effective Date
907 KAR 1:715		
Amended	2298	
Amended	2886	(See 38 Ky.R.)
908 KAR 3:050		
Amended	1358	
As Amended	2022	
922 KAR 1:420		
Amended	2092	

SYMBOL KEY:
* Statement of Consideration not filed by deadline
** Withdrawn, not in effect within 1 year of publication
*** Withdrawn before being printed in Register
(r) Repealer regulation: KRS 13A.310-on the effective date of an administrative regulation that repeals another, the regulations compiler shall delete the repealed administrative regulation and the repealing administrative regulation

VOLUME 38

EMERGENCY ADMINISTRATIVE REGULATIONS:
(Note: Emergency regulations expire 180 days from the date filed; or 180 days from the date filed plus number of days of requested extension, or upon replacement or repeal, whichever occurs first.)

32 KAR 1:050E	206	7-1-11
32 KAR 1:070E	207	7-1-11
101 KAR 2:095E		(See 37 Ky.R.)
Replaced	482	9-28-11
101 KAR 2:102E		(See 37 Ky.R.)
Replaced	484	9-28-11
101 KAR 2:210E	731	9-15-11
101 KAR 3:015E		(See 37 Ky.R.)
Replaced	488	9-28-11
103 KAR 15:195E		(See 37 Ky.R.)
Replaced	13	8-5-11
201 KAR 8:532E		(See 37 Ky.R.)
Replaced	501	9-13-11
201 KAR 8:562E		(See 37 Ky.R.)
Replaced	504	9-13-11
201 KAR 30:310E	209	7-7-11
201 KAR 30:320E	210	7-7-11
201 KAR 30:330E	211	7-7-11
301 KAR 2:221E		
Amended	874	9-20-11
301 KAR 2:222E		
Amended	876	9-20-11
301 KAR 2:225E	732	8-18-11
302 KAR 29:061E	11	6-3-11
302 KAR 45:010E	456	8-2-11
815 KAR 4:010E	212	7-8-11
815 KAR 4:025E	215	7-8-11
815 KAR 4:030E	217	7-8-11
815 KAR 4:040E	219	7-8-11
815 KAR 4:050E	221	7-8-11
815 KAR 4:060E	223	7-8-11
815 KAR 4:070E	225	7-8-11
815 KAR 10:070E		(See 37 Ky.R.)
Replaced	241	8-17-11
902 KAR 15:020E	227	6-30-11
907 KAR 1:018E		
Amended	880	10-3-11
907 KAR 1:595E	459	7-21-11
921 KAR 3:090E	232	6-30-11
Replaced	416	10-19-11

ORDINARY ADMINISTRATIVE REGULATIONS:

11 KAR 3:100		
Amended	49	10-7-11
As Amended	464	
11 KAR 15:090		
Amended	64	
As Amended	476	10-7-11
13 KAR 2:020		
Amended	804	
16 KAR 2:010		
Amended	68	
As Amended	479	10-7-11
16 KAR 2:040		
Amended	635	
As Amended	885	
16 KAR 4:060		
Amended	71	
As Amended	481	10-7-11
16 KAR 5:040		
Amended	637	
As Amended	887	
16 KAR 6:030		(See 37 Ky.R.)
As Amended	13	7-11-11
16 KAR 9:090	705	
As Amended	889	
32 KAR 1:050		
Amended	294	
32 KAR 1:070		
Amended	295	
As Amended	736	
101 KAR 1:365		
Amended	1011	
101 KAR 1:375		
Amended	641	
As Amended	890	
101 KAR 1:335		
Amended	809	
101 KAR 2:046		
Amended	643	
As Amended	891	
101 KAR 2:056		
Amended	645	
As Amended	892	
101 KAR 2:095		(See 37 Ky.R.)
As Amended	482	9-28-11
101 KAR 2:102		(See 37 Ky.R.)
As Amended	484	9-28-11
101 KAR 2:105		
Amended	646	
As Amended	893	
101 KAR 2:106		
Amended	648	
As Amended	894	
101 KAR 2:180		
Amended	650	
101 KAR 2:210		
Amended	812	
101 KAR 3:015		(See 37 Ky.R.)
As Amended	488	9-28-11
103 KAR 8:010		
Amended	73	
103 KAR 3:020		
Amended	1013	
103 KAR 15:195		(See 37 Ky.R.)
As Amended	13	8-5-11
105 KAR 1:140		
Amended	74	
As Amended	492	9-28-11
105 KAR 1:190		
Amended	77	

Regulation Number	38 Ky.R. Page No.	Effective Date
As Amended	494	9-28-11
105 KAR 1:440		
Amended	813	
200 KAR 21:010		
Amended	84	
As Amended	500	9-28-11
200 KAR 21:031	166	9-28-11
201 KAR 1:160		
Amended	814	
201 KAR 2:170		
Amended	652	
201 KAR 3:045		
As Amended	736	
201 KAR 3:090		
As Amended	737	
201 KAR 5:110	167	
Amended	621	
Reprint		
201 KAR 8:532		(See 37 Ky.R.)
As Amended	501	9-13-11
201 KAR 8:562		(See 37 Ky.R.)
As Amended	504	9-13-11
201 KAR 9:091*(r)* 419	10-19-11	
201 KAR 14:015		
Amended	86	
As Amended	508	10-7-11
201 KAR 18:192		
Amended	654	
As Amended	894	
201 KAR 20:056		(See 37 Ky.R.)
As Amended	235	8-17-11
201 KAR 20:161		
Amended	297	10-19-11
201 KAR 20:370		
Amended	299	10-19-11
201 KAR 20:470		(See 37 Ky.R.)
As Amended	237	8-17-11
As Amended	737	
201 KAR 22:020		
Amended	87	
Withdrawn		8-12-11
Amended	657	
As Amended	896	
201 KAR 22:045		
Amended	89	10-19-11
201 KAR 22:053		
Amended	91	10-19-11
201 KAR 23:050		
Amended	817	
201 KAR 23:075		
Amended	818	
201 KAR 29:050		
Amended	300	
Amended	787	
As Amended	897	
201 KAR 30:310	420	
Amended	989	
201 KAR 30:320	421	
201 KAR 30:330	422	
201 KAR 30:360	423	
Amended	990	
201 KAR 30:370	425	
Withdrawn	8-3-11	
201 KAR 30:375	1069	
201 KAR 36:060		
Amended	1018	
201 KAR 36:070		
Amended	1021	
201 KAR 39:011	1070	
201 KAR 39:030		
Amended	1022	
201 KAR 39:040		
Amended	1024	
201 KAR 39:050		
Amended	1026	
201 KAR 39:060		
Amended	1028	
201 KAR 39:070		
Amended	1030	
201 KAR 39:080		
Amended	1031	
201 KAR 39:090		
Amended	1032	
201 KAR 39:100		
Amended	1035	
201 KAR 39:120		
Amended	1037	
201 KAR 42:035		(See 37 Ky.R.)
Amended	93	
201 KAR 43:010		(See 37 Ky.R.)
As Amended	899	
201 KAR 44:010	426	
201 KAR 44:020	427	
As Amended	900	
201 KAR 44:030	429	
As Amended	900	
201 KAR 44:040	431	
As Amended	901	
201 KAR 44:050	433	
301 KAR 1:015		
Amended	303	10-6-11
301 KAR 1:152	434	10-6-11
301 KAR 1:201		
Amended	305	10-6-11
301 KAR 2:082		
Amended	1038	
301 KAR 2:142		
Amended	1042	
301 KAR 2:221		
Amended	1044	
301 KAR 2:222		
Amended	1046	
301 KAR 2:225		
Amended	821	
301 KAR 2:228	168	
Amended	789	
301 KAR 2:300		(See 37 Ky.R.)
As Amended	16	8-5-11
302 KAR 45:010		
Amended	659	
As Amended	903	
304 KAR 1:070	1072	
400 KAR 2:090		
Amended	623	
401 KAR 8:020		(See 37 Ky.R.)
As Amended	508	10-7-11
401 KAR 42:005		(See 37 Ky.R.)
Amended	255	
As Amended	510	10-6-11
401 KAR 42:011		(See 37 Ky.R.)
As Amended	514	10-6-11
401 KAR 42:020		(See 37 Ky.R.)
Amended	259	
As Amended	515	
As Amended	741	10-6-11
401 KAR 42:030		(See 37 Ky.R.)
Amended	263	
As Amended	518	
As Amended	744	10-6-11
401 KAR 42:040		(See 37 Ky.R.)
Amended	266	
As Amended	520	10-6-11
401 KAR 42:045		(See 37 Ky.R.)
As Amended	522	10-6-11

Regulation Number	38 Ky.R. Page No.	Effective Date
401 KAR 42:050		(See 37 Ky.R.)
As Amended	523	10-6-11
401 KAR 42:060		(See 37 Ky.R.)
Amended	269	
As Amended	523	10-6-11
401 KAR 42:070		(See 37 Ky.R.)
Amended	271	
As Amended	524	10-6-11
401 KAR 42:080		(See 37 Ky.R.)
Amended	274	
As Amended	527	10-6-11
401 KAR 42:090		(See 37 Ky.R.)
As Amended	528	10-6-11
401 KAR 42:095		(See 37 Ky.R.)
As Amended	529	10-6-11
401 KAR 42:200		(See 37 Ky.R.)
As Amended	529	10-6-11
401 KAR 42:250		(See 37 Ky.R.)
Amended	275	
As Amended	530	10-6-11
401 KAR 42:290		(See 37 Ky.R.)
As Amended	540	10-6-11
401 KAR 42:300		(See 37 Ky.R.)
As Amended	543	10-6-11
401 KAR 42:316		(See 37 Ky.R.)
As Amended	544	10-6-11
401 KAR 42:320		(See 37 Ky.R.)
As Amended	545	10-6-11
401 KAR 42:330		(See 37 Ky.R.)
Amended	287	
As Amended	546	
As Amended	746	10-6-11
401 KAR 42:335		(See 37 Ky.R.)
As Amended	549	10-6-11
401 KAR 42:340		(See 37 Ky.R.)
As Amended	549	10-6-11
401 KAR 47:205		(See 37 Ky.R.)
Amended	290	
As Amended	550	10-6-11
401 KAR 47:207		(See 37 Ky.R.)
As Amended	554	10-6-11
401 KAR 48:205		(See 37 Ky.R.)
As Amended	556	10-6-11
401 KAR 48:206		(See 37 Ky.R.)
As Amended	559	10-6-11
401 KAR 48:207		(See 37 Ky.R.)
As Amended	562	10-6-11
401 KAR 48:208		(See 37 Ky.R.)
As Amended	564	10-6-11
401 KAR 51:052		(See 37 Ky.R.)
Amended	28	
405 KAR 5:085		
Amended	662	
Amended	991	
405 KAR 5:095		
Amended	666	
Amended	994	
405 KAR 7:091		
Amended	670	
Amended	998	
405 KAR 12:020		
Amended	674	
Amended	1003	
500 KAR 8:010		(See 37 Ky.R.)
As Amended	240	9-2-11
501 KAR 1:030		
Amended	824	
501 KAR 1:080		
Amended	827	
501 KAR 2:020		(See 37 Ky.R.)
As Amended	566	10-7-11
501 KAR 2:060		(See 37 Ky.R.)
As Amended	567	10-7-11
501 KAR 3:010		(See 37 Ky.R.)
As Amended	568	10-7-11
501 KAR 3:020		(See 37 Ky.R.)
As Amended	569	10-7-11
501 KAR 3:030		(See 37 Ky.R.)
As Amended	571	10-7-11
501 KAR 3:040		(See 37 Ky.R.)
As Amended	571	
As Amended	749	
501 KAR 3:050		(See 37 Ky.R.)
As Amended	750	
501 KAR 3:060		(See 37 Ky.R.)
As Amended	572	10-7-11
501 KAR 3:070		(See 37 Ky.R.)
As Amended	573	10-7-11
501 KAR 3:080		(See 37 Ky.R.)
As Amended	574	10-7-11
501 KAR 3:090		(See 37 Ky.R.)
As Amended	574	
As Amended	755	
501 KAR 3:100		(See 37 Ky.R.)
As Amended	576	10-7-11
501 KAR 3:110		(See 37 Ky.R.)
As Amended	576	10-7-11
501 KAR 3:120		(See 37 Ky.R.)
As Amended	577	10-7-11
501 KAR 3:130		(See 37 Ky.R.)
As Amended	578	10-7-11
501 KAR 3:140		(See 37 Ky.R.)
As Amended	756	
501 KAR 3:150		(See 37 Ky.R.)
As Amended	580	10-7-11
501 KAR 3:160		(See 37 Ky.R.)
As Amended	582	10-7-11
501 KAR 3:170		(See 37 Ky.R.)
As Amended	583	10-7-11
501 KAR 6:060		
Amended	310	
As Amended	757	
501 KAR 6:220		
Amended	679	
As Amended	907	
501 KAR 7:010		(See 37 Ky.R.)
Amended	2969	
As Amended	583	10-7-11
501 KAR 7:020		(See 37 Ky.R.)
Amended	2970	
As Amended	584	10-7-11
501 KAR 7:030		(See 37 Ky.R.)
Amended	2972	
As Amended	585	10-7-11
501 KAR 7:040		(See 37 Ky.R.)
Amended	2973	
As Amended	585	10-7-11
501 KAR 7:050		(See 37 Ky.R.)
As Amended	759	
501 KAR 7:060		(See 37 Ky.R.)
Amended	2978	
As Amended	586	10-7-11
501 KAR 7:070		(See 37 Ky.R.)
Amended	2979	
As Amended	587	10-7-11
501 KAR 7:080		(See 37 Ky.R.)
Amended	2981	
As Amended	588	10-7-11
501 KAR 7:090		(See 37 Ky.R.)
Amended	2982	
As Amended	588	10-7-11
501 KAR 7:110		(See 37 Ky.R.)
Amended	2985	
As Amended	589	10-7-11

Regulation Number	38 Ky.R. Page No.	Effective Date
501 KAR 7:120		(See 37 Ky.R.)
Amended	2987	
As Amended	590	10-7-11
501 KAR 7:130		(See 37 Ky.R.)
Amended	2989	
As Amended	591	10-7-11
501 KAR 7:140		(See 37 Ky.R.)
As Amended	762	
501 KAR 7:150	3041	(See 37 Ky.R.)
As Amended	591	10-7-11
501 KAR 13:010		
As Amended	592	10-7-11
502 KAR 11:010		
Amended	681	
As Amended	908	
502 KAR 11:020		
Amended	1051	
502 KAR 11:050		
Amended	684	
As Amended	909	
502 KAR 13:010		
Amended	686	
As Amended	911	
502 KAR 13:040		
Amended	689	
As Amended	912	
502 KAR 13:070		
Amended	690	
As Amended	913	
505 KAR 1:130		(See 37 Ky.R.)
As Amended	18	
600 KAR 6:080		
Amended	1052	
601 KAR 11:035	171	
As Amended	593	10-4-11
603 KAR 5:050		
Amended	1055	
603 KAR 7:080		
Amended	313	
Amended	791	
702 KAR 6:110	172	
As Amended	594	10-7-11
703 KAR 5:200		
Amended	627	
703 KAR 5:220	707	
703 KAR 5:230	711	
704 KAR 3:341(r)	173	
Withdrawn		8-25-11
704 KAR 19:001	1074	
782 KAR 1:020		
Amended	828	
782 KAR 1:030		
Amended	830	
782 KAR 1:040		
Amended	834	
782 KAR 1:070		
Amended	836	
787 KAR 1:010		
Amended	323	
As Amended	763	
787 KAR 1:090		(See 37 Ky.R.)
As Amended	595	10-7-11
787 KAR 1:210		(See 37 Ky.R.)
As Amended	241	9-2-11
Amended	838	
803 KAR 2:304		
Amended	95	
As Amended	596	10-7-11
803 KAR 2:308		
Amended	97	10-7-11
803 KAR 2:309		
Amended	99	
As Amended	597	10-7-11
803 KAR 2:313		
Amended	101	
As Amended	597	10-7-11
803 KAR 2:319		
Amended	104	10-7-11
803 KAR 2:320		
Amended	106	10-7-11
803 KAR 2:403		
Amended	112	10-7-11
803 KAR 2:407		
Amended	114	10-7-11
803 KAR 2:425		
Amended	116	
As Amended	598	10-7-11
803 KAR 2:500		
Amended	118	10-7-11
803 KAR 2:505		
Amended	120	
As Amended	598	10-7-11
803 KAR 2:600		
Amended	122	10-7-11
806 KAR 3:170		(See 37 Ky.R.)
Amended	37	9-2-11
806 KAR 3:190		
Amended	1057	
806 KAR 9:020		
Amended	325	
Amended	802	
As Amended	913	
806 KAR 9:070		
Amended	839	
806 KAR 9:220		(See 37 Ky.R.)
Amended	124	
As Amended	599	10-7-11
806 KAR 12:120		(See 37 Ky.R.)
Amended	44	9-2-11
806 KAR 12:150		
Amended	326	
As Amended	764	
806 KAR 12:170		
Amended	329	
806 KAR 17:180		
Amended	128	10-7-11
806 KAR 17:545		
Amended	129	
As Amended	601	10-7-11
806 KAR 49:050	857	
807 KAR 5:076		
Amended	132	
Amended	629	
As Amended	765	
807 KAR 5:100		
Amended	137	
Withdrawn	8-15-11	
Amended	841	
807 KAR 5:110		
Amended	139	
Withdrawn	8-15-11	
Amended	844	
810 KAR 1:005		
Amended	43	
As Amended	603	10-7-11
810 KAR 1:009		
Amended	146	
As Amended	605	10-7-11
810 KAR 1:012		
Amended	150	
As Amended	608	10-7-11
810 KAR 1:014		
Amended	153	
As Amended	610	10-7-11

LOCATOR INDEX - EFFECTIVE DATES

Regulation Number	38 Ky.R. Page No.	Effective Date
810 KAR 1:027		
Amended	331	
810 KAR 1:070		
Amended	155	
As Amended	769	
810 KAR 1:090		
Amended	848	
810 KAR 1:145	174	
As Amended	773	
810 KAR 1:150	179	
As Amended	611	10-7-11
811 KAR 1:005		(See 37 Ky.R.)
Reprint	5	7-1-11
811 KAR 1:285	182	
As Amended	777	
811 KAR 1:290	186	
As Amended	613	10-7-11
811 KAR 2:010		(See 37 Ky.R.)
Reprint	7	7-1-11
811 KAR 2:185	1889	
As Amended	780	
811 KAR 2:190		(See 37 Ky.R.)
As Amended	18	8-5-11
811 KAR 2:200	193	
As Amended	616	10-7-11
815 KAR 4:010		
Amended	334	
As Amended	914	
815 KAR 4:025		
Amended	337	
As Amended	915	
815 KAR 4:030	436	
As Amended	916	
815 KAR 4:040	438	
As Amended	917	
815 KAR 4:050	441	
As Amended	818	
815 KAR 4:060	442	
As Amended	919	
815 KAR 4:070	444	
815 KAR 8: 030		
Amended	161	
As Amended	618	9-28-11
815 KAR 7:120		
Amended	692	
As Amended	920	
815 KAR 7:125		
Amended	695	
815 KAR 8:007	713	8-15-11
As Amended	922	
815 KAR 10:070		(See 37 Ky.R.)
As Amended	241	8-17-11
815 KAR 20:030		(See 37 Ky.R.)
As Amended	20	8-5-11
815 KAR 35:060		(See 37 Ky.R.)
As Amended	242	9-2-11
815 KAR 35:100		(See 37 Ky.R.)
As Amended	2449	9-2-11
900 KAR 6:030		(See 37 Ky.R.)
As Amended	21	8-5-11
Amended	696	
As Amended	922	
900 KAR 6:075		
Amended	339	
Amended	1007	
900 KAR 6:080		
Amended	342	
As Amended	923	
900 KAR 7:030		(See 37 Ky.R.)
As Amended	22	8-5-11
900 KAR 7:040		
Amended	163	
As Amended	618	9-13-11
902 KAR 8:160		(See 37 Ky.R.)
As Amended	245	8-17-11
902 KAR 8:165		(See 37 Ky.R.)
As Amended	247	8-17-11
902 KAR 8:170		(See 37 Ky.R.)
As Amended	249	8-17-11
902 KAR 15:020		
Amended	343	
As Amended	924	
902 KAR 100:019		
Amended	348	
As Amended	927	
902 KAR 100:022		
Amended	364	
As Amended	942	
902 KAR 100:040		
Amended	372	
As Amended	949	
902 KAR 100:042		
Amended	376	
As Amended	952	
902 KAR 100:100		
Amended	387	
As Amended	961	
902 KAR 100:142		
Amended	850	
907 KAR 1:018		
Amended	1062	
907 KAR 1:595		
Amended	697	
As Amended	968	
907 KAR 1:715		(See 37 Ky.R.)
As Amended	25	8-5-11
908 KAR 1:310		
Amended	395	
As Amended	970	
908 KAR 3:060		
Amended	408	
As Amended	783	10-19-11
921 KAR 2:040		
Amended	411	10-19-11
921 KAR 2:050		
Amended	413	
921 KAR 3:030		
Amended	1066	
921 KAR 3:090		
Amended	416	10-19-11
922 KAR 1:490		
Amended	701	
As Amended	986	

SYMBOL KEY:

* Statement of Consideration not filed by deadline

** Withdrawn, not in effect within 1 year of publication

*** Withdrawn before being printed in Register

(r) Repealer regulation: KRS 13A.310-on the effective date of an administrative regulation that repeals another, the regulations compiler shall delete the repealed administrative regulation and the repealing administrative regulation.

KRS INDEX

KRS SECTION	REGULATION
13B	101 KAR 1:365
	201 KAR 20:161
	902 KAR 15:020
15.383	502 KAR 13:010
16.505	105 KAR 1:190
16.576	105 KAR 1:190
16.645	105 KAR 1:190
17.500-17.580	922 KAR 1:490
17.550-17.991	501 KAR 6:220
18A.005	101 KAR 2:056
18A.025	101 KAR 2:106
18A.030	101 KAR 2:210
	101 KAR 2:046
18A.032	101 KAR 2:046
18A.075	101 KAR 1:335
	101 KAR 1:365
18A.095	101 KAR 1:365
18A.105	105 KAR 1:140
18A.110	101 KAR 2:046
	101 KAR 2:056
	101 KAR 2:105
	101 KAR 2:180
18A.115	101 KAR 1:335
18A.120	101 KAR 2:046
	101 KAR 2:056
18A.150	101 KAR 2:046
18A.196	101 KAR 2:105
18A.197	101 KAR 2:105
18A.203	101 KAR 2:106
18A.225	101 KAR 2:210
18A.0751	101 KAR 1:335
	101 KAR 1:365
18A.2254	101 KAR 2:210
45A	603 KAR 7:080
45A.645	304 KAR 1:070
45A.800-45A.835	600 KAR 6:080
45A.843	200 KAR 21:031
45A.853	200 KAR 21:010
	200 KAR 21:031
45A.873	200 KAR 21:031
61.365	502 KAR 13:010
61.510	105 KAR 1:190
61.546	105 KAR 1:140
61.552	105 KAR 1:140
61.569	105 KAR 1:140
61.637	105 KAR 1:140
61.645	105 KAR 1:440
61.675	105 KAR 1:140
61.690	105 KAR 1:190
61.685	105 KAR 1:140
61.702	105 KAR 1:140
61.870-61.884	103 KAR 3:020
78.510	105 KAR 1:190
78.545	105 KAR 1:140
	105 KAR 1:190
78.616	105 KAR 1:140
78.625	105 KAR 1:140
96A	603 KAR 7:080
116.048	921 KAR 3:030
119.025	501 KAR 1:030
121.015	32 KAR 1:050
121.180	32 KAR 1:070
131.010-131.130	103 KAR 3:020
131.150-131.240	103 KAR 3:020
132.010	815 KAR 7:120
	815 KAR 7:125
134.580	103 KAR 3:020
136.600-136.660	103 KAR 3:020
136.1801	103 KAR 8:010
136.1802	103 KAR 8:010
138.510	810 KAR 1:090
139.010-139.795	103 KAR 3:020
144.132	103 KAR 3:020
144.137	10 KAR 3:020
146.410	400 KAR 2:090
146.440	400 KAR 2:090
150.010	301 KAR 1:015
	301 KAR 1:152
	301 KAR 1:201
	301 KAR 2:082
	301 KAR 2:221
	301 KAR 2:222
	301 KAR 2:228
150.015	301 KAR 2:082
150.025	301 KAR 2:221
150.090	301 KAR 1:015
150.170	301 KAR 1:152
	301 KAR 1:201
150.175	301 KAR 1:152
	301 KAR 1:201
	301 KAR 2:142
150.305	301 KAR 2:082
	301 KAR 2:142
	301 KAR 2:221
	301 KAR 2:222
	301 KAR 2:228
150.320	301 KAR 2:082
150.330	301 KAR 2:082
	301 KAR 2:221
	301 KAR 2:222
	301 KAR 2:225
150.340	301 KAR 1:201
	301 KAR 2:221
	301 KAR 2:222
	301 KAR 2:225
	301 KAR 2:228
150.360	301 KAR 2:142
150.445	301 KAR 1:152
150.450	301 KAR 1:152
150.603	301 KAR 2:225
150.625	301 KAR 1:015
150.990	301 KAR 1:015
	301 KAR 1:152
	301 KAR 1:201
	301 KAR 2:082
	301 KAR 2:142
	301 KAR 2:221
	301 KAR 2:222
	301 KAR 2:228
151B	603 KAR 7:080
154A.130	11 KAR 15:090
154.20-206	103 KAR 3:020
156.070	702 KAR 6:110
	704 KAR 19:001
156.160	13 KAR 2:020
	704 KAR 19:001
157	603 KAR 7:080
157.3175	16 KAR 2:040
158.6451	13 KAR 2:020
	16 KAR 2:010
	703 KAR 5:200
	703 KAR 5:230
158.6453	13 KAR 2:020
	703 KAR 5:220
158.6455	703 KAR 5:220
160.613-160.617	103 KAR 3:020
161.020	16 KAR 2:010
	16 KAR 2:060
	16 KAR 4:040
	16 KAR 5:040
	16 KAR 9:090
161.028	16 KAR 2:010
	16 KAR 4:060
	16 KAR 5:040

KRS SECTION	REGULATION
	16 KAR 9:090
161.030	16 KAR 2:010
	16 KAR 2:040
	16 KAR 4:060
	16 KAR 5:040
	16 KAR 9:090
161.042	16 KAR 5:040
161.048	16 KAR 9:090
161.1221	16 KAR 9:090
163	603 KAR 7:080
163.450-163.470	782 KAR 1:040
163.470	782 KAR 1:020
	782 KAR 1:030
164.020	13 KAR 2:020
164.030	13 KAR 2:020
164.744	11 KAR 3:100
164.748	11 KAR 3:100
164.753	11 KAR 3:100
164.772	201 KAR 22:020
164.7871	11 KAR 15:090
164.7874	11 KAR 15:090
164.7877	11 KAR 15:090
164.7879	11 KAR 15:090
164.7881	11 KAR 15:090
164.7885	11 KAR 15:090
164.7889	11 KAR 15:090
186.412	502 KAR 13:010
	502 KAR 13:040
186.480	782 KAR 1:070
186.576	782 KAR 1:070
186.577	782 KAR 1:070
186.578	782 KAR 1:070
186.579	782 KAR 1:070
189.125	603 KAR 7:080
189.337	603 KAR 5:050
189A.010	908 KAR 1:310
189A.040	908 KAR 1:310
189A.045	908 KAR 1:310
189A.070	908 KAR 1:310
194A.050	900 KAR 7:040
196	501 KAR 6:060
197	501 KAR 6:060
198B.010	815 KAR 7:120
	815 KAR 7:125
198B.030	815 KAR 4:050
	815 KAR 4:060
198B.040	815 KAR 7:120
	815 KAR 7:125
197.410	501 KAR 1:030
198B.050	815 KAR 4:025
	815.KAR 7:120
	815 KAR 7:125
198B.060	815 KAR 7:120
	815 KAR 7:125
198B.080	815 KAR 7:120
	815 KAR 7:125
198B.110	815 KAR 7:120
	815 KAR 7:125
198B.260	815 KAR 7:120
	815 KAR 7:125
198B.400	815 KAR 4:010
198B.400-540	815 KAR 4:025
198B.470	815 KAR 4:010
198B.480	815 KAR 4:010
	815 KAR 4:070
198B.500	815 KAR 4:010
198B.510	815 KAR 4:010
198B.520	815 KAR 4:070
198B.540	815 KAR 4:010
198B.650	815 KAR 8:030
198B.654	815 KAR 8:007
198B.656	815 KAR 8:030
198B.658	815 KAR 8:030
198B.662	815 KAR 8:030
198B.664	815 KAR 8:030

KRS SECTION	REGULATION
198B.676	815 KAR 8:007
198B.990	815 KAR 7:120
	815 KAR 7:125
198B.4003	815 KAR 4:030
	815 KAR 4:040
198B.4005	815 KAR 4:070
198B.4009	815KAR 4:030
	815 KAR 4:040
	815 KAR 4:050
	815 KAR 4:060
	815 KAR 4:070
198B.4011	815 KAR 4:030
	815 KAR 4:050
	815 KAR 4:060
	815 KAR 4:070
198B.4013	815 KAR 4:040
	815 KAR 4:050
	815 KAR 4:060
	815 KAR 4:070
198B.4017	815 KAR 4:070
198B.4019	815 KAR 4:070
198B.4021	815 KAR 4:070
198B.4023	815 KAR 4:030
	815 KAR 4:040
	815 KAR 4:050
	815 KAR 4:060
	815 KAR 4:070
198B.4025	815 KAR 4:030
	815 KAR 4:040
	815 KAR 4:050
	815 KAR 4:060
198B.4027	815 KAR 4:030
199.011	922 KAR 1:490
199.462	922 KAR 1:490
202A.011	603 KAR 7:080
202B	603 KAR 7:080
205	603 KAR 7:080
205.010	921 KAR 2:040
205.200	921 KAR 2:040
205.220	921 KAR 2:050
205.245	921 KAR 2:040
	921 KAR 2:050
205.560	907 KAR 1:018
205.561	907 KAR 1:018
205.712	105 KAR 1:190
205.5631	907 KAR 1:018
205.5632	907 KAR 1:018
205.5634	907 KAR 1:018
205.5636	907 KAR 1:018
205.5638	907 KAR 1:018
205.5639	907 KAR 1:018
205.6316	907 KAR 1:018
209	603 KAR 7:080
210	603 KAR 7:080
210.710	908 KAR 3:060
210.720	908 KAR 3:060
210.730	908 KAR 3:060
211.180	902 KAR 15:020
211.842-852	902 KAR 100:019
	902 KAR 100:022
	902 KAR 100:040
	902 KAR 100:042
	902 KAR 100:100
	902 KAR 100:142
211.990	902 KAR 100:019
	902 KAR 100:022
	902 KAR 100:040
	902 KAR 100:042
	902 KAR 100:100
	902 KAR 100:142
214.615	201 KAR 22:020
216	603 KAR 7:080
216B.010	900 KAR 6:075
216B.010-130	900 KAR 6:080
216B.015-216B.130	900 KAR 6:030

KRS SECTION	REGULATION
216B.095	900 KAR 6:075
216B.330-339	900 KAR 6:080
216B.455	900 KAR 6:075
	900 KAR 6:030
	900 KAR 6:080
216B.990	900 KAR 6:075
	900 KAR 6:030
	900 KAR 6:080
216.2923	900 KAR 7:040
216.2925	900 KAR 7:040
217	201 KAR 2:170
217B	302 KAR 29:061E
217.015	907 KAR 1:018
219.310-219.410	902 KAR 15:020
219.991	902 KAR 15:020
222.003	908 KAR 1:310
222.005	908 KAR 1:310
222.221	908 KAR 1:310
222.231	908 KAR 1:310
222.271	908 KAR 1:310
222.990	908 KAR 1:310
224.01	401 KAR 42:005
	401 KAR 42:020
	401 KAR 42:060
	401 KAR 42:070
	401 KAR 42:080
	401 KAR 47:205
224.01-310	103 KAR 3:020
224.01-400	401 KAR 42:250
224.01-405	401 KAR 42:250
224.10	401 KAR 42:005
	401 KAR 42:020
	401 KAR 42:030
	401 KAR 42:040
	401 KAR 42:040
	401 KAR 42:070
	401 KAR 42:080
	401 KAR 47:205
224.10-410	405 KAR 5:095
224.20-100	401 KAR 51:052
224.20-110	401 KAR 51:052
224.20-120	401 KAR 51:052
224.40	401 KAR 42:060
	401 KAR 42:070
	401 KAR 42:080
	401 KAR 47:205
224.43	401 KAR 42:060
	401 KAR 42:070
	401 KAR 42:080
	401 KAR 47:205
224.46	401 KAR 42:060
	401 KAR 42:070
224.60	401 KAR 42:005
	401 KAR 42:020
	401 KAR 42:030
	401 KAR 42:040
	401 KAR 42:060
	401 KAR 42:070
	401 KAR 42:080
224.60-105	401 KAR 42:330
224.60-120	401 KAR 42:250
224.60-130	401 KAR 42:250
	401 KAR 42:330
224.60-135	401 KAR 42:250
224.60-140	401 KAR 42:250
	401 KAR 42:330
224.60-150	401 KAR 42:250
	401 KAR 42:330
224.99	401 KAR 47:205
227.300	815 KAR 7:120
227.550	815 KAR 7:120
	815 KAR 7:125
230.215	810 KAR 1:009
	810 KAR 1:012
	810 KAR 1:014

KRS SECTION	REGULATION
	810 KAR 1:027
230.225	810 KAR 1:090
	810 KAR 1:150
	811 KAR 1:290
	811 KAR 2:200
	810 KAR 1:070
230.240	810 KAR 1:005
	810 KAR 1:027
230.260	810 KAR 1:145
	810 KAR 1:150
	811 KAR 1:285
	811 KAR 1:290
	811 KAR 2:185
	811 KAR 2:200
	810 KAR 1:014
230.290	810 KAR 1:027
	810 KAR 1:145
	810 KAR 1:150
	811 KAR 1:285
	811 KAR 1:290
	811 KAR 2:185
	811 KAR 2:200
230.310	810 KAR 1:027
	810 KAR 1:145
	810 KAR 1:150
	811 KAR 1:285
	811 KAR 1:290
	811 KAR 2:185
	811 KAR 2:200
230.320	810 KAR 1:027
	810 KAR 1:145
	810 KAR 1:150
	811 KAR 1:285
	811 KAR 1:290
	811 KAR 2:185
	811 KAR 2:200
230.330	810 KAR 1:070
230.361	810 KAR 1:150
	811 KAR 1:290
	811 KAR 2:200
230.370	810 KAR 1:150
	811 KAR 1:290
	811 KAR 2:200
230.400	810 KAR 1:090
230.800	810 KAR 1:070
235.010	301 KAR 1:015
235.990	301 KAR 1:015
237.110	502 KAR 11:010
	502 KAR 11:020
	502 KAR 11:050
	502 KAR 13:040
	502 KAR 13:070
237.138	502 KAR 13:040
	502 KAR 13:070
237.138-237.142	502 KAR 13:010
237.140	502 KAR 13:040
	502 KAR 13:070
237.142	502 KAR 13:040
	502 KAR 13:070
246.650	302 KAR 45:010
246.660	302 KAR 45:010
246.990	302 KAR 45:010
247.920	103 KAR 3:020
260.016	304 KAR 1:070
273	603 KAR 7:080
278	807 KAR 5:076
278.030	807 KAR 5:076
278.040	807 KAR 5:076
278.160	807 KAR 5:076
278.180	807 KAR 5:076
278.185	807 KAR 5:076
278.190	807 KAR 5:076
278.310	807 KAR 5:076
278.380	807 KAR 5:076
278.702	807 KAR 5:100

KRS SECTION	REGULATION
	807 KAR 5:110
278.704	807 KAR 5:100
	807 KAR 5:110
278.706	807 KAR 5:100
	807 KAR 5:110
278.708	807 KAR 5:100
	807 KAR 5:110
278.710	807 KAR 5:100
	807 KAR 5:110
278.712	807 KAR 5:100
	807 KAR 5:110
278.714	807 KAR 5:100
	807 KAR 5:110
278.716	807 KAR 5:100
	807 KAR 5:110
281	603 KAR 7:080
281A	601 KAR 11:035
304.09	806 KAR 9:020
304.1-050	806 KAR 3:170
	806 KAR 9:070
	806 KAR 17:545
	806 KAR 49:050
304.1-110	806 KAR 9:070
304.2-065	806 KAR 3:170
304.2-210-304.2-290	806 KAR 3:170
304.2-310	806 KAR 17:545
304.3-120	806 KAR 3:170
	806 KAR 3:190
304.3-125	806 KAR 3:170
304.3-140	806 KAR 3:190
304.3-240	806 KAR 3:170
	806 KAR 3:190
304.3-241	806 KAR 3:170
304.3-400	806 KAR 49:050
304.3-430	806 KAR 49:050
304.3-500-304.3-570	806 KAR 49:050
304.4-010	806 KAR 9:070
304.5-020	806 KAR 3:190
304.5-030	806 KAR 3:190
304.5-040	806 KAR 3:190
304.5-050	806 KAR 3:190
304.5-060	806 KAR 3:190
304.5-070	806 KAR 3:190
304.5-080	806 KAR 3:190
304.5-110	806 KAR 3:190
304.5-130	806 KAR 49:050
304.5-140	806 KAR 49:050
304.5-150	806 KAR 49:050
304.6	806 KAR 3:190
304.7	806 KAR 3:190
304.9-020	806 KAR 17:545
	806 KAR 49:050
304.9-030	806 KAR 9:070
304.9-105	806 KAR 9:070
304.9-160	806 KAR 9:070
304.9-190	806 KAR 9:070
304.9-230	806 KAR 9:070
304.9-260	806 KAR 9:220
304.9-295	806 KAR 9:220
304.9-320	806 KAR 9:320
304.9-390	806 KAR 12:120
304.9-430	806 KAR 9:070
304.9-505	806 KAR 9:070
304.9-700 – 304.9-759	806 KAR 49:050
304.12-010	806 KAR 12:120
	806 KAR 12:150
	806 KAR 12:170
304.12-020	806 KAR 12:150
	806 KAR 12:170
304.12-130	806 KAR 9:020
304.12-230	806 KAR 12:150
	806 KAR 12:170
304.14-642	806 KAR 9:220
304.15-700	806 KAR 9:220
304.17A-005	806 KAR 17:545

KRS SECTION	REGULATION
304.17A-080	806 KAR 17:180
304.17A-250	806 KAR 17:180
304.17A-820	806 KAR 3:170
304.24-100	806 KAR 49:050
304.24-350	806 KAR 3:190
304.32-210	806 KAR 3:170
304.33	806 KAR 3:190
304.35-040	806 KAR 3:170
304.37-010	806 KAR 3:170
304.37-010 – 304.37-150	806 KAR 49:050
304.37-020	806 KAR 3:170
304.36-140	806 KAR 3:170
304.42-150	806 KAR 3:170
304.45-020	806 KAR 49:050
304.45-030	806 KAR 3:170
	806 KAR 49:050
304.45-040	806 KAR 3:170
304.48-110	806 KAR 3:170
304.49-010	806 KAR 3:190
	806 KAR 49:050
304.49-060	806 KAR 49:050
304.49-070	806 KAR 3:170
304.49-080	806 KAR 3:170
304.49-090	806 KAR 3:170
304.49-110	806 KAR 49:050
304.49-170	806 KAR 49:050
304.50-060	806 KAR 3:170
304.50-075	806 KAR 3:170
304.99-020	806 KAR 12:120
309.300	201 KAR 39:011
309.301	201 KAR 39:011
309.304	201 KAR 39:030
	201 KAR 39:050
	201 KAR 39:080
	201 KAR 39:090
	201 KAR 39:100
	201 KAR 39:120
309.312	201 KAR 39:030
	201 KAR 39:040
	201 KAR 39:050
	201 KAR 39:070
	201 KAR 39:080
309.314	201 KAR 39:040
	201 KAR 39:050
309.316	201 KAR 39:100
309.318	201 KAR 39:060
	201 KAR 39:100
	210 KAR 39:120
309.358	201 KAR 42:035
309.359	201 KAR 42:035
311.530-311.620	201 KAR 9:090
311.550	907 KAR 1:018
311.560	907 KAR 1:018
311.990	201 KAR 9:090
314.011	201 KAR 20:161
	907 KAR 1:595
314.031	201 KAR 20:161
314.041	201 KAR 20:370
314.042	201 KAR 20:370
314.051	201 KAR 20:370
314.071	201 KAR 20:161
	201 KAR 20:370
314.091	201 KAR 20:161
	201 KAR 20:370
314.107	201 KAR 20;161
314.470	201 KAR 20:161
314.991	201 KAR 20:161
314A.115	201 KAR 29:050
315	201.KAR 2:170
317.440	201 KAR 14:015
317.450	201 KAR 14:015
317.570	201 KAR 14:015
319B.020	201 KAR 44:050
319B.030	201 KAR 44:010
	201 KAR 44:040

KRS SECTION	REGULATION
319B.060	201 KAR 44:020
	201 KAR 44:030
319B.140	201 KAR 44:040
320.210	201 KAR 5:110
320.240	201 KAR 5:110
322	401 KAR 42:020
	401 KAR 42:080
322A	410 KAR 42:020
322.290	201 KAR 18:192
	401 KAR 42:080
324A.150-324A.164	201 KAR 30:375
324A.150-164	201 KAR 30:360
324A.152	201 KAR 30:310
	201 KAR 30:320
	201 KAR 30:330
324A.154	210 KAR 30:310
	201 KAR 30:320
	201 KAR 30:330
325.301	201 KAR 1:160
327.010	201 KAR 22:045
327.040	201 KAR 22:045
	201 KAR 22:053
327.050	201 KAR 22:020
327.060	201 KAR 22:020
327.070	201 KAR 22:020
	201 KAR 22:045
	201 KAR 22:053
327.080	201 KAR 22:020
335.110-335.160	201 KAR 23:050
335.130	201 KAR 23:075
335.500	201 KAR 36:060
335.505	201KAR 36:060
335.525	201 KAR 36:060
	201 KAR 36:070
335.527	201KAR 36:070
335.990	201 KAR 23:050
338	803 KAR 2:304
	803 KAR 2:319
	803 KAR 2:407
338.015	803 KAR 2:320
	803 KAR 2:500
	803 KAR 2:505
338.031	803 KAR 2:320
338.051	803 KAR 2:309
	803 KAR 2:313
	803 KAR 2:403
	803 KAR 2:600
338.061	803 KAR 2:309
	803 KAR 2:313
	803 KAR 2:403
	803 KAR 2:600
327.080	201.KAR 22:020
341.190	787 KAR 1:010
341.270	787 KAR 1:210
341.272	787 KAR 1:210
346.185	501 KAR 1:030
350.010	405 KAR 5:085
	405 KAR 5:095
350.020	405 KAR 12:020
350.028	405 KAR 7:091
	405 KAR 12:020
350.050	405 KAR 12:020
350.070	405 KAR 7:091
350.085	405 KAR 12:020
350.090	405 KAR 7:091
350.093	405 KAR 7:091
350.113	405 KAR 12:020
350.130	405 KAR 5:085
	405 KAR 5:095
	405 KAR 7:091
	405 KAR 12:020
350.151	405 KAR 12:020
350.240	405 KAR 5:085
	405 KAR 5:095
350.255	405 KAR 7:091

KRS SECTION	REGULATION
350.300	405 KAR 5:085
	405 KAR 5:095
350.465	405 KAR 7:091
	405 KAR 12:020
350.990	405 KAR 5:095
	405 KAR 12:020
	405 KAR 7:091
350.0301	405 KAR 7:091
350.0305	405 KAR 7:091
361.48	782 KAR 1:030
439	501 KAR 6:060
439.310-439.440	501 KAR 1:080
439.340	501 KAR 1:030
439.3401	501 KAR 1:030
439.563	501KAR 1:030
440.120	907 KAR 1:018
446.010	502 KAR 13:010
447.331	907 KAR 1:018
447.332	907 KAR 1:018
447.333	907 KAR 1:018
532.040-532.060	501 KAR 1:080
532.043	501 KAR 1:030
532.060	501 KAR 1:030
532.080	501 KAR1:030
600.020	922 KAR 1:490
605.090	922 KAR 1 490
605.120	922 KAR 1:490
605.130	922 KAR 1:490
620.050	922 KAR 1:490
640.080	501 KAR 1:030
645	603 KAR 7:080
706	782 KAR 1:030
711	782 KAR 1:030
722	782 KAR 1:040
723	782 KAR 1:030
7 C.F.R.	702 KAR 6:110
	921 KAR 3:030
	921 KAR 3:090
10 C.F.R.	902 KAR 100:019
	902 KAR 100:040
	902 KAR 100:042
	902 KAR 100:100
	902 KAR 100:142
21 C.F.R.	902 KAR 100:100
23 C.F.R	600 KAR 6:080
29 C.F.R.	803 KAR 2:304
	803 KAR 2:308
	803 KAR 2:309
	803 KAR 2:313
	803 KAR 2:319
	803 KAR 2:320
	803 KAR 2:403
	803 KAR 2:425
	803 KAR 2:500
	803 KAR 2:505
	803 KAR 2:600
30 C.F.R.	405 KAR 7:091
	405 KAR 12:020
34 C.F.R.	11 KAR 3:100
	782 KAR 1:030
	782 KAR 1:040
40 C.F.R	401 KAR 42:005
	401 KAR 42:020
	401 KAR 42:030
	401 KAR 42:040
	401 KAR 42:060
	401 KAR 42:070
	401 KAR 42:080
	401 KAR 42:330
	401 KAR 51:052
	902 KAR 100:019
	902 KAR 100:022
42 C.F.R.	105 KAR 1:140
	702 KAR 6:110
	907 KAR 1:018

KRS SECTION	REGULATION	KRS SECTION	REGULATION
	907 KAR 1:595		
45 C.F.R.	105 KAR 1:140		
	603 KAR 7:080		
48 C.F.R.	600 KAR 6:080		
49 C.F.R.	601 KAR 11:035		
	603 KAR 7:080		
	902 KAR 100:019		
	922 KAR 1:490		
50 C.F.R.	302 KAR 45:010		
7 U.S.C.	302 KAR 29:061E		
	921 KAR 3:030		
11 U.S.C.	902 KAR 100:040		
15 U.S.C.	902 KAR 100:042		
18 U.S.C.	502 KAR 13:010		
	502 KAR 13:040		
	502 KAR 13:070		
	806 KAR 3:170		
20 U.S.C.	11 KAR 3:100		
23 U.S.C.	600 KAR 6:080		
26 U.S.C.	105 KAR 1:190		
	806 KAR 12:120		
	806 KAR 12:150		
29 U.S.C.	782 KAR 1:030		
	782 KAR 1:040		
	806 KAR 12:120		
	806 KAR 12:150		
30 U.S.C.	405 KAR 7:091		
	405 KAR 12:020		
42 U.S.C.	401 KAR 42:005		
	401 KAR 42:020		
	401 KAR 42:030		
	401 KAR 42:040		
	401 KAR 42:060		
	401 KAR 42:070		
	401 KAR 42:080		
	401 KAR 51:052		
	603 KAR 7:080		
	907 KAR 1:018		
	907 KAR 1:595		
	921 KAR 2:040		
	921 KAR 2:050		
	921 KAR 3:030		
	922 KAR 1:490		
49 U.S.C.	603 KAR 7:080		
Pub.L.104-191	105 KAR 1:140		
Pub.L.108-264	806 KAR 9:220		
Pub.L.108-277	502 KAR 13:010		
Pub. L. 111-5	105 KAR 1:140		
2010 ES Ky. Acts Ch. 1	806 KAR 17:545		
2011 Ky. Acts Ch. 82	807 KAR 5:100		
	807 KAR 5:110		

TECHNICAL AMENDMENT INDEX

Regulation Number	Effective Date	Regulation Number	Effective Date

The Technical Amendment Index is a list of administrative regulations which have had technical, nonsubstantive amendments entered since being published in the 2011 bound Volumes. These technical changes have been made by the Regulations Compiler pursuant to KRS 13A.040(9) and (10) or 13A.312(2). Since these changes were not substantive in nature, administrative regulations appearing in this index will NOT be published in the Administrative Register. NOTE: Finalized copies of the technically amended administrative regulations are available for viewing on the Legislative Research Commission Web site at http://www.lrc.ky.gov/home.htm.

401 KAR 8:030	10-19-11

SUBJECT INDEX

AGRICULTURE, DEPARTMENT OF
Ginseng
Ginseng; 302 KAR 45:010
Structural Pest Control
Temporary suspension of Category 8, public health, certification requirement; 302 KAR 29:061.

AIR QUALITY, DIVISON FOR
Attainment and Maintenance of the National Ambient Air Quality Standards
Review of new sources in or impacting upon nonattainment areas; 401 KAR 51:052

BEHAVIORAL HEALTH, DIVISION OF
Substance Abuse
Certification standards and administrative procedures for driving under the influence programs; 908 KAR 1:310

BUILDING CODE ENFORCEMENT, DIVISION OF
Heating, Ventilation, and Air Conditioning Licensing Requirements
Apprentice heating, ventilation, and air conditioning (HVAC) mechanic registration and certification requirements; 815 KAR 8:030
Elevator Safety
Annual inspection of elevators; 815 KAR 4:010
Continuing education requirements for elevator contractors and elevators mechanics; 815 KAR 4:050
Elevator contractor licensing requirements; 815 KAR 4:030
Elevator mechanic licensing requirements; 815 KAR 4:040
Fees and refunds; 815 KAR 4:070
Permit fees for new and altered elevators; 815 KAR 4:025
Requirements for approval of continuing education courses and providers; 815 KAR 4:060
Heating, Ventilation, and Air Conditioning Licensing Requirements
Kentucky Board of Heating, Ventilation, and Air Conditioning (HVAC) Contractors budget review and responsibility; 815 KAR 8:007
Kentucky Building Code
Kentucky Building Code; 815 KAR 7:120
Kentucky Residential Code; 815 KAR 7:125

COMMUNITY BASED SERVICES; DEPARTMENT FOR
Family Support; Division of
Food Stamp Program
Application process; 921 KAR 3:030
Simplified assistance for the elderly program or "SAFE"; 921 KAR 3:090
K-TAP, Kentucky Works, Welfare to Work, State Supplementation
Procedures for determining initial and continuing eligibility; 921 KAR 2:040
Time and manner of payments; 921 KAR 2:050
Protection and Permanency; Division of
Background checks for foster and adoptive parents, caretaker relatives, kinship caregivers, and reporting requirements; 922 KAR 1:490

COUNCIL ON POSTSECONDARY EDUCATION
Public Educational Institutions
Guidelines for admission to the state-supported postsecondary education institutions in Kentucky; 13 KAR 2:020

DEVELOPMENTAL HEALTH, DEVELOPMENTAL AND INTELLECTUAL DISABILITIES; DEPARTMENT FOR
Behavioral Health, Division of *(See Behavioral Health, Division of)*

EDUCATION, DEPARTMENT OF
Alternative Education Programs
Alternative Education Programs; 704 KAR 19:001
Assessment and Accountability
Next Generation Instructional Programs and Support; 703 KAR 5:230
Next-generation learners; 703 KAR 5:200
School and district accountability recognition, support and consequences; 703 KAR 5:220
Food Service Programs
Claim reimbursement for school and community nutrition programs; 702 KAR 6:110

EDUCATION AND WORKFORCE DEVELOPMENT CABINET
Education, Department of; Titles 702-704 KAR *(See Education, Department of)*
Workforce Investment, Department of; 787 KAR Chapter 1 *(See Workforce Investment, Department of)*

EDUCATION PROFESSIONAL STANDARDS BOARD
Alternative Routes to Certification
University based alternative certification program for teachers of world languages, 16 KAR 9:090.
Certification Procedures
Certificate renewals and successful teaching experience; 16 KAR 4:060
Educator Preparation
Admission, placement, and supervision in student teaching.; 16 KAR 5:040.
Teaching Certificates
Interdisciplinary early childhood education, birth to primary; 16 KAR 2:040
Kentucky teaching certificates; 16 KAR 2:010

ENERGY AND ENVIRONMENT CABINET
Electric Generation and Transmission Siting, Board on
Utilities
Board application fees; 807 KAR 5:100
Board proceedings; 807 KAR 5:110
Environmental Protection, Department of
Air Quality, Division for; 401 KAR Chapters 50, 59, and 61 *(See Air Quality, Division for)*
Waste Management, Department of; 401 KAR Chapter 42 *(See Waste Management, Department of)*
Public Service Commission; 807 KAR 5 *(See Public Service Commission)*

FINANCE AND ADMINISTRATION CABINET
Kentucky Retirement Systems
General Rules
Employer's Administrative duties; 105 KAR 1:140
Kentucky Retirement Systems Trustee Education Program; 105 KAR 1:440
Qualified domestic relations orders; 105 KAR 1:190
Revenue, Department of; KAR Title 103 *(See Revenue, Department of)*
Office of Financial Management
Underwriter and Bond Counsel Selection Process
Procedure for prequalification of underwriters and bond counsel for state bond issues; 200 KAR 21:010
Repeal of 200 KAR 21:030; 200 KAR 21:031

FISH AND WILDLIFE RESOURCES, DEPARTMENT OF
Fish
Asian Carp Program; 301 KAR 1:152
Boats and motor restrictions; 301 KAR 1:015
Recreational fishing limits; 301 KAR 1:201
Game
Dove, wood duck, teal, and other migratory game bird hunting; 301 KAR 2:225
Sandhill crane hunting requirements, 301 KAR 2:228
Spring wild turkey hunting; 201 KAR 2:142
Transportation and holding of exotic wildlife; 201 KAR 2:082
Waterfowl hunting requirements on public lands; 301 KAR 2:222
Waterfowl seasons and limits; 301 KAR 2:221

GENERAL GOVERNMENT CABINET
Accountancy, Board of
Peer reviews; 201 KAR 1:160
Barbering, Board of
Retaking of examination; 201 KAR 14:015
Interpreters for the Deaf and Hard of Hearing; Board of

Application; qualifications for licensure; and certification levels; 201 KAR 39:030
Application and qualifications for temporary licensure; 201 KAR 39:070
Code of ethics; 201 KAR 39:120
Complaint procedure; 201 KAR 39:100
Continuing education requirements; 201 KAR 39:090
Definitions; 201 KAR 39:011
Fees; 201 KAR 39:040
Reciprocity; 201 KAR 39:080
Reinstatement of license subject to disciplinary action; 201 KAR 39:060
Renewal of licenses, extension of temporary licenses and reinstatement; 201 KAR 39:050
Licensed Professional Counselors; Board of
Education and examination requirements; 201 KAR 36:070
Qualifying experience under supervision; 201 KAR 36:060
Massage Therapy; Board of Licensure for
Application process, exam, and curriculum requirements; 201 KAR 42:035
Orthotists, Prosthetists, Orthotists/Prosthetists, Pedorthists, or Orthotic Fitters, Board of Licensure for
Alternative mechanism requirements for licensure as an Orthotist, Prosthetist, Orthotist/Prosthetist, Pedorthist, or Orthotic Fitter prior to January 1, 2013 for applicants in practice who are not certified; 201 KAR 44:030
Fees; 201 KAR 44:010
Per diem of board members; 201 KAR 44:050
Professional conduct and code of ethics; 201 KAR 44:040
Requirements for Licensure as an Orthotist, Prosthetist, Orthotist/Prosthetist, Pedorthist, Orthotic Fitter prior January 1, 2013; 201 KAR 44:020
Medical Licensure, Board of
Repeal of 201 KAR 9:090; 201 KAR 9:091
Natural Resources, Department for; Title 405 *(See Natural Resources; Department of*
Nursing, Board of
Application for licensure; 201 KAR 20:370
Investigation and disposition of complaints; 201 KAR 20:161
Optometric Examiners; Board of
Expanded therapeutic procedures; 201 KAR 5:110
Pharmacy, Board of
Computerized recordkeeping; 201 KAR 2:170
Physical Therapy, Board of
Code of ethical standards and standards of practice for physical therapists and physical therapist assistants; 201 KAR 22:053
Continued competency requirements and procedures; 201 KAR 22:045
Eligibility and credentialing procedure; 201 KAR 22:020
Professional engineers and land surveyors, Board of Licensure for
Continuing professional development for professional land surveyors; 201 KAR 18:192
Real Estate Appraisers Board
Application for registration; 201 KAR 30:330
Fees for registration of appraisal management companies; 201 KAR 30:310
Fees paid to appraisers; 201 KAR 30:375
Operation of an appraisal management company; 201 KAR 30:360
Surety bond; 201 KAR 30:320
Respiratory Care, Board of
Continuing education requirements; 201 KAR 29:050
Social Work, Board of
Continuing education; 201 KAR 23:075
Renewal, termination, reinstatement of license; 201 KAR 23:050

HEALTH AND FAMILY SERVICES, CABINET FOR
Community Based Services; Department for KAR Title 921 Chapter 3 *(See Community Based Services; Department for)*
Health Policy; Office of KAR Title 900 *(See Health Policy, Office of)*
Developmental Health, Developmental and Intellectual Disabilities; Department for KAR Title 908 Chapter 1 *(See Developmental Health, Developmental and Intellectual Disabilities; Department for)*
Medicaid Services
Model Waiver 11 Service coverage and reimbursement; 907 KAR 1:595
Reimbursement for drugs; 907 KAR 1:018
Mental Health and Mental Retardation Services; Department for KAR Title 908 Chapter 3 *(See Mental Health and Mental Retardation Services; Department for)*
Public Health; Department for KAR Title 902 Chapter 15 *(See Public Health and Safety; Department of)*
Public Health Protection and Safety; Division of KAR Title 902 Chapter 100 *(See Public Health Protection and Safety; Division of)*

HEALTH POLICY, OFFICE OF
Certificate of Need
Certificate of Need emergency circumstance; 900 KAR 6:080
Certificate of need expenditure minimums; 900 KAR 6:030
Certificate of Need nonsubstantive review;900 KAR 6:075
Data Reporting and Public Use Data Sets
Release of public data sets for health care discharge data; 900 KAR 7:040

HOUSING, BUILDINGS AND CONSTRUCTION, DEPARTMENT OF
Building Code Enforcement, Division of 815 KAR 4-8 *(See Building Code Enforcement, Division of)*

INSURANCE, DEPARTMENT OF
Agents, Consultants, Solicitors, and Adjusters
Continuing education; 806 KAR 9:220
Examinations; 806 KAR 9:070
False or deceptive names, titles, prohibited; 806 KAR 9:020
Authorization of Insurers and General Requirements
Annual audited financial reports; 806 KAR 3:170
Risk-based capital for insurers; 806 KAR 3:190
Captive Insurers
Captive risk retention groups; 806 KAR 49:050
Health and Life Divison
Standard health benefit plan; 806 KAR 17:180
ICARE program employer eligibility, application process, and requirements; 806 KAR 17:545
Trade Practices and Frauds
Annuity disclosures; 806 KAR 12:150
Life insurance disclosures; 806 KAR 12:170
Suitability in annuity transactions; 806 KAR 12:120

JUSTICE AND PUBLIC SAFETY CABINET
Kentucky State Police; Department of Title 502 Chapter 11 *(See Kentucky State Police; Department of)*
Application for license to carry concealed deadly weapon; 502 KAR 11:010
Updating, replacement, and renewal of license to carry concealed deadly weapon; 502 KAR 11:050
Office of the Secretary
Northpoint Training Center; 501 KAR 6:060
Treatment for sex offenders; 501 KAR 6:220
Parole Board
Determining parole eligibility; 501 KAR 1:030
Parole Board Policies and Procedure; 501 KAR 1:080

KENTUCKY HIGHER EDUCATION ASSISTANCE AUTHORITY
Commonwealth Merit Scholarship Program
Kentucky Educational Excellence Scholarship (KEES) Program; 11 KAR 15:090
Division of Student and Administrative Services
Kentucky Loan Program; 11 KAR 3:100

KENTUCKY HORSE RACING COMMISSION
Harness
Advance deposit account wagering; 811 KAR 1:285
Licensing totalizator companies; 811 KAR 1:290
Quarter Horse, Appaloosa, and Arabian Racing
Advance deposit account wagering; 811 KAR 2:185
Licensing totalizator companies; 811 KAR 2:200
Thoroughbred Racing
Advance deposit account wagering; 810 KAR 1:145

Entries, subscriptions, and declaration; 810 KAR 1:027
Racing Officials; 810 KAR 1:005
Horses;810 KAR 1:012
Jockeys and apprentices; 810 KAR 1009
Kentucky Thouroughbred Development Fund; 810 KAR 1:090
Kentucky Thorogubred Breeders' Incentive Fund; 810 KAR 1:070
Licensing totalizator companies; 810 KAR 1:150
Weights; 810 KAR 1:014

KENTUCKY STATE POLICE; DEPARTMENT OF
Concealed Deadly Weapons
Applicant photograph requirements for license to carry concealed deadly weapon; 502 KAR 11:020
Application for license to carry concealed deadly weapon; 502 KAR 11:010
Updating, replacement, and renewal of license to carry concealed deadly weapon; 502 KAR 11:050
Law Enforcement Offices Safety Act of 2004
Applicant photograph requirements for certification to carry a concealed deadly weapon pursuant to the Law Enforcement Officers Safety Act of 2004 ("LEOSA"), 18 U.S.C. 926C, for honorably retired elected or appointed peace officers; 502 KAR 13:070
Application for certification under the Law Enforcement Officers Safety Act of 2004 ("LEOSA"), 18 U.S.C. 926C, for honorably retired elected or appointed peace officers; 502 KAR 13:010
Issuance, expiration, and renewal of certification to carry a concealed deadly weapon pursuant to the Law Enforcement Officers Safety Act of 2004 ("LEOSA"), 18 USC 926C, for honorably retired elected or appointed peace officers; 502 KAR 13:040

LABOR CABINET
Workplace Standards, Department of; 803 Chapter 2 *(See Workplace Standards, Department of)*

MENTAL HEALTH AND MENTAL RETARDATION SERVICES; DEPARTMENT FOR
Institutional Care
"Means Test" for determining patient liability, 908 KAR 3:060

NATURAL RESOURCES; DEPARTMENT FOR
General Provisions
General practice provisions; 405 KAR 7:091
Inspection and Enforcement
Enforcement; 405 KAR 12:020
Surface Effects of Noncoal Mining
Administrative hearings, informal settlement conferences, and general provisions; 405 KAR 5:095
Enforcement; 405 KAR 5:085

PERSONNEL BOARD
Appeal and hearing procedures; 101 KAR 1:365
Employee actions; 101 KAR 1:335

PERSONNEL CABINET
Personnel Cabinet, Classified
Annual leave sharing procedures; 101 KAR 2:106
Applications, qualifications and examinations; 101 KAR 2:046
Employee performance evaluation system; 101 KAR 2:180
Guidelines for admission to the state-supported postsecondary education institutions in Kentucky; 13 KAR 2:020
Registers; 101 KAR 2:056
Sick leave sharing procedures; 101 KAR 2:105
2012 Plan Year Handbook for the Public Employee Health Insurance Plan, 101 KAR 2:210

PUBLIC HEALTH; DEPARTMENT FOR
Public Health Protection and Safety; Division of KAR Title 902 Chapter 100 *(See Public Health Protection and Safety; Division of)*
Mobile homes and recreational vehicles parks; facilities standards
Recreational vehicles; 902 KAR 15:020

PUBLIC HEALTH AND SAFETY; DIVISION OF
Radiology
Decommissioning and financial surety; 902 KAR 100:042
Industrial radiography; 902 KAR 100:100
General provisions for specific licenses; 902 KAR 100:040
Licensing requirements for land disposal of radioactive waste; 902 KAR 100:022
Standards for protection against radiation; 902 KAR 100:019
Wire line service operations; 902 KAR 100:142

PUBLIC PROTECTION CABINET
Housing, Buildings, and Construction, Department of 815 KAR Chapter 25 *(Housing, Buildings, and Construction, Department of)*
Insurance, Department of; Title 806 Chapters 2, 14-17*(See Insurance, Department of)*
Kentucky Horse Racing Commission; KAR Titles 810 and 811*(See Kentucky Horse Racing Commission)*

PUBLIC SERVICE COMMISSION
Utilities
Alternative rate adjustment procedure for small utilities; 807 KAR 5:076
Electric Generation and Transmission siting; Kentucky State Board
Board application fees; 807 KAR 5:100
Board proceedings; 807 KAR 5:110

REVENUE, DEPARTMENT OF
Ad Valorem Tax; State Assessment
Watercraft allocation; 103 KAR 8:010
Forms
Sales and Telecommunications Forms Manual; 103 KAR 3:020

STATE, DEPARTMENT OF
Kentucky Registry of Election Finance
Reports and Forms
Political committee registration; 32 KAR 1:050
Waiver from filing candidate election finance statement; 32 KAR 1:070

TRANSPORTATION CABINET
Commercial Driver's License
Waiver of skills test for military personnel; 601 KAR 11:035
Highways, Department
Uniform traffic control devices; 603 KAR 5:050
Mass Transportation
Human service transportation deliver; 603 KAR 7:080
Office of Audits
Financial records and audit or other engagement of firms; 600 KAR 6:080

TOURISM, ARTS AND HERITAGE CABINET
Fish and wildlife resources, Title 301 Chapters 1-4 *(See Fish and Wildlife Resources)*
Parks and Campgrounds
Kentucky Proud Promotion Program; 304 KAR 1:070

WASTE MANAGEMENT, DIVISION OF
Underground storage tanks
Classification of UST systems containing petroleum and listing of associated cleanup levels; 401 KAR 42:080
Contents of the application for petroleum-contaminated soil treatment facilities; 401 KAR 47:205
Definitions related to 401 KAR Chapter 42; 401 KAR 42:005
Out-of-service UST systems, temporary closure and permanent closure of UST systems, and change in service of UST systems; 401 KAR 42:070
Petroleum Storage Tank Environmental Assurance Fund Reimbursement Procedures; 401 KAR 42:250
Small owners tank removal account; 401 KAR 42:330
UST: design, construction, installation, and registration; 401 KAR 42:020
UST system general operating requirements; 401 KAR 42:030
UST system release detection; 401 KAR 42:040

UST system release response and corrective action for UST systems containing petroleum or hazardous substances; 401 KAR 42:060

WORKFORCE INVESTMENT, DEPARTMENT OF
Employment and Training, Office of
Appeal procedures; 782 KAR 1:040
Application for employer account; reports; 787 KAR 1:010
Certified driver training program; 782 KAR 1:070
Definition for 782 KAR 1:020
Scope and nature of services; 782 KAR 1:030
Unemployment Insurance
Employer contribution rates; 787 KAR 1:210

WORKPLACE STANDARDS, DEPARTMENT OF
Occupational Safety and Health
Adoption of 29 C.F.R. Part 1926.250-252; 803 KAR 2:407
Commercial diving operations; 803 KAR 2:319
Cranes and Derricks in construction; 803 KAR 2:505
Exit routes and emergency planning; 803 KAR 2:304
General environmental controls; 803 KAR 2:309
Maritime employment; 803 KAR 2:500
Materials handling and storage; 803 KAR 2:313
Occupational health and environmental controls; 803 KAR 2:403
Occupational safety and health standards for agriculture; 803 KAR 2:600
Personnel protective equipment; 803 KAR 2:308
Toxic and hazardous substances; 803 KAR 2:320 and 2:425

SUBJECT INDEX