ADMINISTRATIVE REGISTER OF KENTUCKY

LEGISLATIVE RESEARCH COMMISSION
Frankfort, Kentucky

VOLUME 41, NUMBER 7
THURSDAY, JANUARY 1, 2015

The submission deadline for this edition of the *Administrative Register of Kentucky* was noon, December 15, 2014.

ARRS – JANUARY 13, 2015 TENTATIVE AGENDA **1477**
REGULATION REVIEW PROCEDURE **1480**

EMERGENCIES
Transportation Cabinet 1481

AS AMENDED
Kentucky Higher Education Assistance Authority 1485
Education Professional Standards Board 1510
Kentucky Retirement Systems 1511
Kentucky Heritage Council 1513
Department of Fish and Wildlife Resources 1518
Board of Education 1522
Department of Labor 1526
Horse Racing Commission 1529
Board of Home Inspectors 1551
CHFS: Office of Health Policy 1557
CHFS: Office of Health Benefit and Health Info Exchange 1560
CHFS: Department for Public Health 1566
CHFS: Department for Medicaid Services 1647
CHFS: Comm. for Children with Special Health Care Needs ... 1658
CHFS: Department for Community Based Services 1660

AMENDED AFTER COMMENTS
Board of Medical Licensure 1670
Board of Education 1672
CHFS: Department for Public Health 1674
CHFS: Department for Medicaid Services 1686

PROPOSED AMENDMENTS
Education Professional Standards Board 1698
Finance and Administration Cabinet 1701
Board of Licensed Diabetes Educators 1705
Department of Fish and Wildlife Resources 1710
CHFS: Department for Income Support 1715
CHFS: Department for Community Based Services 1719

NEW ADMINISTRATIVE REGULATIONS
Transportation Cabinet 1725
Board of Education 1728

ARRS Report **1731**
OTHER COMMITTEE REPORTS **1737**

CUMULATIVE SUPPLEMENT
Locator Index - Effective Dates ..... **G - 2**
KRS Index ..... **G - 12**
Technical Amendments ..... **G - 19**
Subject Index ..... **G - 20**

MEETING NOTICE: ARRS

The **Administrative Regulation Review Subcommittee** is **tentatively** scheduled to meet January 13, 2015, at 1:00 p.m. in room 149 Capitol Annex. See **tentative agenda** on pages **1477-1479** of this Administrative Register.

The **ADMINISTRATIVE REGISTER OF KENTUCKY** is the monthly supplement for the 2015 Edition of **KENTUCKY ADMINISTRATIVE REGULATIONS SERVICE**.

HOW TO CITE: Cite all material in the **ADMINISTRATIVE REGISTER OF KENTUCKY** by Volume number and Page number. Example: Volume 41, Kentucky Register, page 318 (short form: 41 Ky.R. 318).

KENTUCKY ADMINISTRATIVE REGULATIONS are codified according to the following system and are to be cited by Title, Chapter and Regulation number, as follows:

Title		Chapter	Regulation
806	KAR	50:	155
Cabinet, Department, Board, or Agency		Office, Division, Board, or Major Function	Specific Regulation

ADMINISTRATIVE REGISTER OF KENTUCKY
(ISSN 0096-1493)
© 2015 Legislative Research Commission, All Rights Reserved

The Administrative Register of Kentucky is published monthly by the Legislative Research Commission, 700 Capitol Avenue, Room 300, Frankfort, Kentucky 40601. Subscription rate, postpaid in the United States: $120 (plus 6% Kentucky sales tax) per year for 12 issues, beginning in July and ending with the June issue of the subsequent year. Periodical postage paid at Frankfort, Kentucky.
POSTMASTER: Send address changes to Administrative Register of Kentucky, 700 Capitol Avenue, Room 64, State Capitol, Frankfort, Kentucky 40601.

KENTUCKY LEGISLATIVE RESEARCH COMMISSION

Chairmen

Senator Robert Stivers
Senate President

Representative Gregory D. Stumbo
House Speaker

Senate and House Members

Senator Katie Kratz Stine
President Pro Tempore

Senator Damon Thayer
Majority Floor Leader

Senator R.J. Palmer II
Minority Floor Leader

Senator Daniel Seum
Majority Caucus Chairman

Senator Johnny Ray Turner
Minority Caucus Chairman

Senator Brandon Smith
Majority Whip

Senator Jerry P. Rhoads
Minority Whip

Representative Larry Clark
Speaker Pro Tempore

Representative Rocky Adkins
Majority Floor Leader

Representative Jeffrey Hoover
Minority Floor Leader

Representative Sannie Overly
Majority Caucus Chairman

Representative Bob DeWeese
Minority Caucus Chairman

Representative Tommy Thompson
Majority Whip

Representative John Carney
Minority Whip

Marcia Seiler, Acting Director
Joe Cox, Printing and Publications Officer

ADMINISTRATIVE REGULATION REVIEW SUBCOMMITTEE

Members

Senator Ernie Harris, Co-Chair
Representative Mary Lou Marzian, Co-Chair
Senator Perry B. Clark
Senator Alice Kerr
Representative Tommy Turner
** Three vacancies as of 1/1/2015

Staff

Donna Little
Emily Caudill
Sarah Amburgey
Emily Harkenrider
Karen Howard
Carrie Klaber
Angela Bertholf
Betsy Cupp

ADMINISTRATIVE REGULATION REVIEW SUBCOMMITTEE
TENTATIVE AGENDA, JANUARY 13, 2015, at 1:00 p.m., Room 149 Capitol Annex

GENERAL GOVERNMENT CABINET
Board of Medical Licensure

Board

201 KAR 9:270. Professional standards for prescribing or dispensing Buprenorphine-Mono-Product or Buprenorphine-Combined-with-Naloxone. (Amended After Comments)
201 KAR 9:310. Continuing medical education. (Deferred from December)
201 KAR 9:450. Fee schedule regarding acupuncturists. (Deferred from December)
201 KAR 9:460. Written plan. (Deferred from December)

Board of Nursing

Board

201 KAR 20:220. Nursing continuing education provider approval.
201 KAR 20:240. Fees for applications and for services.

Board of Licensure for Occupational Therapy

Board

201 KAR 28:010. Definitions and abbreviations.
201 KAR 28:020. General provisions.
201 KAR 28:030. Short-term practice of occupational therapy for persons practicing under KRS 319A.090(1)(e).
201 KAR 28:060. Requirements for licensure.
201 KAR 28:070. Examination.
201 KAR 28:090. Renewals.
201 KAR 28:110. Fees.
201 KAR 28:130. Supervision of occupational therapy assistants, occupational therapy aides, occupational therapy students, and temporary permit holders.
201 KAR 28:140. Code of ethics and unprofessional conduct.
201 KAR 28:170. Deep physical agent modalities.
201 KAR 28:180. Temporary permits.
201 KAR 28:200. Continuing competence.
201 KAR 28:220. Per diem of board members.

TOURISM, ARTS AND HERITAGE CABINET
Department of Fish and Wildlife Resources

Game

301 KAR 2:221 & E. Waterfowl seasons and limits. (“E” expires 4/25/2015)
301 KAR 2:222 & E. Waterfowl hunting requirements on public lands. (“E” expires 4/25/2015)
301 KAR 2:251. Hunting and trapping seasons and limits for furbearers.

JUSTICE AND PUBLIC SAFETY CABINET
Department of Corrections

Office of the Secretary

501 KAR 6:999. Corrections secured policies and procedures.

Kentucky Law Enforcement Council

Council

503 KAR 1:090. Approval of course curriculums. (Deferred from October)
503 KAR 1:111. Repeal of 503 KAR 1:110.

General Training Provision

503 KAR 3:120. Department of Criminal Justice training basic training: graduation requirements; records.

TRANSPORTATION CABINET
Office of the Secretary
Kentucky Bicycle and Bikeways Commission

Motorcycle and Bicycle Safety

601 KAR 14:020. Bicycle Safety standards. (Not Amended After Comments) (Deferred from June)

Department of Highways
Division of Maintenance

Billboards

603 KAR 10:001. Definitions. (Amended After Comments) (Deferred from May)
603 KAR 10:010. Static advertising devices. (Amended After Comments) (Deferred from May)
603 KAR 10:020. Electronic advertising devices. (Amended After Comments) (Deferred from May)
603 KAR 10:030. Removal of vegetation related to advertising devices. (Amended After Comments) (Deferred from May)

EDUCATION AND WORKFORCE DEVELOPMENT CABINET
Board of Education
Department of Education

Instructional Programs

705 KAR 4:250. Energy technology engineering career pathway. (Amended After Comments)

KENTUCKY COMMUNITY AND TECHNICAL COLLEGE SYSTEM
Kentucky Fire Commission

Commission on Fire Protection Personnel Standards and Education

739 KAR 2:060. Certification and qualifications of fire service instructors. (Deferred from December)

PUBLIC PROTECTION CABINET
Department of Alcoholic Beverage Control

Local Administrators

804 KAR 10:031. Local government regulatory license fees.

Office of Occupations and Professions
Board of Home Inspectors

Board

815 KAR 6:040. Home inspector prelicensing providers. (Not Amended After Comments) (Deferred from December)

815 KAR 6:080. Continuing education provider. (Deferred from October)

Department of Housing, Buildings and Construction
Division of Building Code Enforcement

Kentucky Building Code

815 KAR 7:120. Kentucky Building Code. (Not Amended After Comments)

Division of Heating, Ventilation and Air Conditioning

Heating, Ventilation, and Air Conditioning Licensing Requirements

815 KAR 8:010. Master heating, ventilation, and air conditioning (HVAC) contractor licensing requirements. (Not Amended After Comments)

815 KAR 8:020. Journeyman heating, ventilation, and air conditioning (HVAC) mechanic licensing requirements. (Not Amended After Comments)

815 KAR 8:070. Installation permits. (Not Amended After Comments)

815 KAR 8:090. Fees and refunds. (Not Amended After Comments)

Division of Plumbing

Plumbing

815 KAR 20:015. Fees and refunds. (Not Amended After Comments)

815 KAR 20:030. License application; qualifications for examination, examination requirements, expiration, renewal, revival, or reinstatement of licenses. (Not Amended After Comments)

815 KAR 20:050. Installation permits. (Not Amended After Comments)

815 KAR 20:195. Medical gas piping installations. (Not Amended After Comments)

CABINET FOR HEALTH AND FAMILY SERVICES
Department for Public Health
Division of Epidemiology and Health Planning

Communicable Diseases

902 KAR 2:020. Reportable disease surveillance. (Amended After Comments)

Division of Public Health Protection and Safety

Radiology

902 KAR 100:012. Fee schedule. (Amended After Comments, SOC ext.)

Department for Medicaid Services
Division of Policy and Operations

Payments and Services

907 KAR 3:005 & E. Coverage of physicians' services. ("E" expires 3/19/2015) (Amended After Comments, SOC ext.)

Hospital Service Coverage and Reimbursement

907 KAR 10:825. Diagnosis-related group (DRG) inpatient hospital reimbursement. (Amended After Comments) (Deferred from April)

Behavioral Health

907 KAR 15:070 & E. Coverage provisions and requirements regarding services provided by residential crisis stabilization units. ("E" expires 3/19/2015) (Amended After Comments, SOC ext.)

907 KAR 15:075 & E. Reimbursement provisions and requirements for behavioral health services provided by residential crisis stabilization units. ("E" expires 2/16/2015) (Deferred from November)

Department for Aging and Independent Living
Division of Quality Living

Brain Injury

910 KAR 3:030. Traumatic brain injury trust fund operations program.

Department for Community Based Services
Division of Protection and Permanency

Adult Services

922 KAR 5:050. Funding requirements for domestic violence shelters.

REMOVED FROM JANUARY 2015 AGENDA
CABINET FOR HEALTH AND FAMILY SERVICES
Department for Public Health
Division of Maternal and Child Health

Maternal and Child Health

902 KAR 4:030. Newborn screening program. (Comments Received, SOC ext.)

Department for Medicaid Services
Division of Policy and Operations

Behavioral Health

907 KAR 15:040 & E. Coverage provisions and requirements regarding targeted case management for individuals with a substance use disorder. (“E” expires 3/15/2015) (Comments Received, SOC ext.)

907 KAR 15:045 & E. Reimbursement provisions and requirements for targeted case management services for individuals with a substance use disorder. (“E” expires 3/15/2015) (Comments Received, SOC ext.)

907 KAR 15:050 & E. Coverage provisions and requirements regarding targeted case management for individuals with co-occurring mental health or substance use disorders and chronic or complex physical health issues. ("E" expires 3/15/2015) (Comments Received, SOC ext.)

907 KA R 15:055 & E. Reimbursement provisions and requirements regarding targeted case management for individuals with co-occurring mental health or substance use disorders and chronic or complex physical health issues. ("E" expires 3/15/2015) (Comments Received, SOC ext.)

907 KAR 15:060 & E. Coverage provisions and requirements regarding targeted case management for individuals with a severe mental illness and children with a severe emotional disability. ("E" expires 3/15/2015) (Comments Received, SOC ext.)

907 KAR 15:065 & E. Reimbursement provisions and requirements regarding targeted case management for individuals with a severe mental illness and children with a severe emotional disability. ("E" expires 3/15/2015) (Comments Received, SOC ext.)

Department for Community Based Services
Division of Child Care

Day Care

922 KAR 2:160 & E. Child Care Assistance Program. ("E" expires 4/13/2015) (Comments Received, SOC ext.)

ADMINISTRATIVE REGULATION REVIEW PROCEDURE - OVERVIEW
(See KRS Chapter 13A for specific provisions)

Filing and Publication

Administrative bodies shall file with the Regulations Compiler all proposed administrative regulations, public hearing and comment period information, regulatory impact analysis and tiering statement, fiscal note, federal mandate comparison, and incorporated material information. Those administrative regulations received by the deadline established in KRS 13A.050 shall be published in the Administrative Register.

Public Hearing and Public Comment Period

The administrative body shall schedule a public hearing on proposed administrative regulations which shall not be held before the 21st day or later than the last workday of the month of publication. Written comments shall also be accepted until the end of the calendar month in which the administrative regulation was published.

The administrative regulation shall include: the place, time, and date of the hearing; the manner in which persons may submit notification to attend the hearing and written comments; that notification to attend the hearing shall be sent no later than 5 workdays prior to the hearing date; the deadline for submitting written comments; and the name, position, address, and telephone and fax numbers of the person to whom notification and written comments shall be sent.

The administrative body shall notify the Compiler, by phone and letter, whether the hearing was held or cancelled and whether written comments were received. If the hearing was held or written comments were received, the administrative body shall file a statement of consideration with the Compiler by the fifteenth day of the calendar month following the month of publication.

A transcript of the hearing is not required unless a written request for a transcript is made, and the person requesting the transcript shall have the responsibility of paying for same. A recording may be made in lieu of a transcript.

Review Procedure

After the public hearing and public comment period processes are completed, the administrative regulation shall be reviewed by the Administrative Regulation Review Subcommittee at its next meeting. After review by the Subcommittee, the administrative regulation shall be referred by the Legislative Research Commission to an appropriate jurisdictional committee for a second review. The administrative regulation shall be considered as adopted and in effect as of adjournment on the day the appropriate jurisdictional committee meets or 30 days after being referred by LRC, whichever occurs first.

EMERGENCY ADMINISTRATIVE REGULATIONS

STATEMENT OF EMERGENCY
601 KAR 1:112E

This emergency administrative regulation establishes the requirements for a Transportation Network Company to apply for and maintain operating authority in the Commonwealth. The current lack of oversight of businesses that use web-related mobile applications to connect drivers using their personal vehicles with potential passengers has created a public safety concern. An increasing number of people in the Commonwealth rely on the transportation network companies and their drivers as a means of transportation. This emergency administrative regulation has been promulgated to address an imminent risk to public safety caused by a lack of oversight of businesses on which the public increasingly relies for transportation. It will include the requirement of a criminal background check for TNC drivers, and will ensure that safety inspections are performed on vehicles used to transport the public. In this emergency regulation, regulatory requirements are established for the operation of a Transportation Network Company with an emphasis on public safety.

This emergency administrative regulation shall be replaced by an ordinary administrative regulation which is being filed simultaneously with the Regulations Compiler. The ordinary administrative regulation is identical to this emergency administrative regulation.

STEVEN L. BESHEAR, Governor
MICHAEL W. HANCOCK, Secretary

TRANSPORTATION CABINET
Department of Vehicle Regulation
Division of Motor Carriers
(New Emergency Administrative Regulation)

601 KAR 1:112E. Transportation network company.

RELATES TO: KRS 17.500, 61.878(1)(c)1,186.281, 189.290, 189A.010, 281.600, 281.620, 281.6301(2), 281.650, 281.655, 281.730(1), 281.912, 281.990, 304.39-020(2), 304.39-320, 532.060

STATUTORY AUTHORITY: KRS 281.600

EFFECTIVE: December 5, 2014

NECESSITY, FUNCTION, AND CONFORMITY: KRS 281.600 authorizes the Department of Vehicle Regulation ("department") to promulgate administrative regulations to regulate and establish requirements for the safe operation of motor vehicles and motor carriers. This administrative regulation establishes the requirements for a transportation network company ("TNC") to operate in Kentucky.

Section 1. Definitions. (1) "Mobile application" means an application or a computer program designed to run on a smartphone, tablet computer, or other mobile device that is used by a TNC to connect TNC drivers with potential passengers.

(2) "Operating authority" means the authority granted to operate as a TNC in the Commonwealth through the application process with the department.

(3) "Prearranged ride" means the period of time that begins at the time a TNC driver accepts a requested ride through a TNC's digital network or mobile application, continues while the driver transports the rider in a personal vehicle, and ends at the time the rider departs from the vehicle.

(4) "Pre-trip acceptance liability policy" means the TNC insurance liability coverage that may apply if a TNC driver is logged into a TNC mobile application and available to receive requests for TNC services if the driver has not accepted a request, is not in route to pick up a passenger, or is not transporting a passenger.

(5) "Street hail" means a request for service made by a potential passenger by using hand gestures or verbal statements.

(6) "Transportation network company" or "TNC" means an entity operating in Kentucky as a motor carrier that uses a digital network or mobile application service to connect passengers to TNC drivers providing transportation network company services.

(7) "Transportation network company driver" or "TNC driver" means an individual who operates a motor vehicle that is owned or leased by the individual and used to provide transportation network company services.

(8) "Transportation network company services" or "TNC services" means the transportation of a passenger between points chosen by the passenger and prearranged with a TNC driver through the use of a TNC digital network or software application.

Section 2. Application. (1) A TNC shall register as a business with the Kentucky Secretary of State unless the applicant is a sole proprietor.

(2) A TNC shall submit a completed Transportation Network Company Authority Application, TC 95-627 and an application fee pursuant to KRS 281.620 to the Division of Motor Carriers.

(3) An application may be submitted electronically, by mail, or by hand delivery.

(4) A TNC shall submit an annual renewal fee to the Division of Motor Carriers pursuant to KRS 281.650.

(5) Operating authority obtained pursuant to this section shall not be transferable.

(6) The following documents shall be submitted with an application and thereafter with each annual renewal:

(a) An affidavit from the corporate officer in charge of Kentucky operations certifying that the national criminal background check of TNC drivers established in Section 5 of this administrative regulation shall be completed prior to allowing the TNC driver to accept rides on the digital network; and

(b) One (1) copy of the current contractual agreement between the TNC and TNC drivers.

(7) A deficient application shall be returned to the applicant with no formal action taken by the department.

Section 3. Demonstration of Financial Responsibility and Insurance. (1) While engaged in a prearranged ride, a TNC shall have primary liability insurance coverage of no less than $1,000,000 per occurrence for damages arising out of claims for bodily injury, death, or destruction of property.

(2) Primary liability insurance coverage during a prearranged ride shall include:

(a) Basic reparation benefits as defined in KRS 304.39-020(2);

(b) Uninsured vehicle coverage as established in KRS 304.20-020; and

(c) Underinsured vehicle coverage as established in KRS 304.39-320.

(3) While a TNC driver is logged into a TNC mobile application but prior to accepting a prearranged ride, a TNC shall maintain pre-trip acceptance liability insurance coverage for TNC drivers in accordance with subsection (4) of this section if:

(a) A TNC driver is logged into a TNC mobile application and is available to receive requests for transportation services from a passenger through the mobile application;

(b) A TNC driver has not accepted a request for TNC services through the mobile application;

(c) A TNC driver is not in route to pick up a passenger; and

(d) A TNC driver is not transporting a passenger to his or her destination.

(4) A TNC shall maintain a pre-trip acceptance liability insurance policy of no less than $50,000 for death and personal injury per person, $100,000 dollars for death and personal injury per incident, and $25,000 dollars for property damage during the periods of time established in subsection (3) of this section. This policy shall provide coverage in the event the driver's personal motor vehicle liability policy does not provide coverage for an incident.

(5) The insurance coverage required by subsections (1) and (3) of this section may be provided either by an insurer licensed

pursuant to KRS 304.3-070 or with a surplus lines insurer eligible under KRS 304.10-010 through KRS 304.10-070.

(6) The insurance coverage prior to a prearranged ride shall include basic reparation benefits pursuant to KRS 304.39-040.

(7) A certificate of liability insurance that meets the required insurance coverage under subsection (3) of this section on a standard Accord form shall be filed with the department for each policy.

(8) A TNC shall require TNC drivers to maintain a personal motor vehicle liability insurance policy that provides coverage in accordance with KRS 304.39 for the vehicle and TNC driver if the driver is not logged into the TNC's digital network or mobile application or engaged in a prearranged ride.

Section 4. Vehicles. (1) A vehicle used by a driver for TNC services shall be qualified by the department to operate by submitting a completed Transportation Network Company Authority Application, TC 95-627 and the minimum annual license fee pursuant to KRS 186.281(3) at the time of the application process established in Section 2 of this administrative regulation.

(2) The TNC shall ensure that the vehicles used by TNC drivers to transport passengers shall be subject to an annual safety inspection by an automotive technician who holds a valid automotive service excellence (A.S.E.) certification.

(3) A TNC shall collect and maintain information on the vehicles being used to provide service by TNC drivers including:

(a) The VIN and license plate number; and

(b) Records of official vehicle inspections by the automotive technician.

(4) Records of vehicle inspection and VIN and license plate numbers shall be kept by the TNC for a minimum of three (3) years from the date of inspection and the TNC shall make the records available to the department or its representative on request. The information and records may be submitted as proprietary information pursuant to KRS 61.878(1)(c)1.

(5)(a) A vehicle used to provide TNC services shall be readily identifiable by the following:

1. A decal affixed to the front windshield on the passenger side of the vehicle provided by the department to the TNC to distribute to qualified vehicles; and

2. An optional decal or trade dress that is company specific and issued by the TNC.

(b) A vehicle fee receipt card shall be presented on inspection.

(6) A driver who is no longer providing TNC service shall return the department issued decal and the vehicle fee receipt card to the TNC who shall return it to the Division of Motor Carriers.

(7) A TNC shall ensure that the vehicles used by drivers to provide TNC services shall:

(a) Have at least four (4) doors;

(b) Be designed to carry no more than eight (8) persons including the driver; and

(c) Be no more than ten (10) model years old with an odometer reading of less than 200,000 miles.

Section 5. TNC Drivers. (1) A TNC shall require each driver to undergo a national criminal background check before providing TNC services. The background check shall be updated every three (3) years that a driver provides TNC services.

(2) The TNC shall submit verification of the background check via an affidavit to the department pursuant to Section 2 of this administrative regulation. The national criminal background check shall be either:

(a) A comprehensive background check using fingerprint analysis; or

(b) An individual analysis using a social security number.

(3) The analysis required in subsection (1) of this section shall be conducted by a business or firm engaged in determining criminal background history.

(4) A TNC shall also require that each TNC driver:

(a) Is at least twenty-one (21) years old and the registered owner of the vehicle;

(b) Has a valid state-issued driver license and vehicle registration;

(c) Has personal automobile insurance coverage as established in Section 3 of this administrative regulation;

(d) Has completed an annual driver safety training course approved by the department;

(e) Provides a written or electronic affirmation that he or she is fit and able to operate a motor vehicle to provide TNC services; and

(f) Is in compliance with applicable state law and local ordinances.

(5) A current list of drivers shall be kept on file with the TNC and made available for inspection by the department on request. A TNC driver's electronic file shall include the following:

(a) A current driving history record to be updated annually;

(b) The current address of the driver;

(c) A copy of a valid state-issued driver's license and the operator's license number;

(d) Proof of his or her personal automobile insurance coverage;

(e) Proof of personal vehicle registration;

(f) Proof of the written or electronic affirmation that a TNC driver is fit and able to operate a motor vehicle to provide TNC services;

(g) Verification of the criminal background check required in subsection (1) of this section;

(h) Records indicating whether a driver has refused to accept a prearranged ride and the reason for doing so; and

(i) Records of complaints against a driver.

(6) A person shall not be a TNC driver whose driving history record shows a conviction of driving under the influence of alcohol or drugs in the previous five (5) years before application to become a driver.

(7) A TNC driver shall not provide transportation services if he or she has been convicted of one (1) of the following offenses:

(a) A Class A felony;

(b) A Class B felony;

(c) An offense involving unlawful sexual behavior as established in KRS 17.500;

(d) Leaving the scene of a traffic accident;

(e) Causing a fatality or fatalities through negligent operation of a vehicle; or

(f) Using a vehicle in the commission of a felony involving the manufacture or distribution of a controlled substance; and

(g) Four (4) moving violations in the past three (3) years or one (1) major violation in the past three (3) years including:

1. Driving on a suspended license;

2. Speeding in excess of twenty-six (26) miles per hour; or

3. Reckless driving as established in KRS 189.290.

(8) A person who has been convicted in another jurisdiction of an offense comparable to one of the offenses in subsections (6) and (7) of this section shall not serve as a TNC driver.

Section 6. Passenger Service. (1) A TNC shall adopt a policy of non-discrimination based on the following:

(a) Destination;

(b) Race or color;

(c) National origin;

(e) Religious belief or affiliation;

(f) Sex and sexual orientation or identity;

(g) Disability;

(h) Age; and

(i) The presence of a passenger's service animal.

(2) A TNC shall notify TNC drivers of the adopted policy of non-discrimination established in subsection (1) of this section.

(3) After acceptance, a TNC driver may refuse to transport a passenger who is acting in an unlawful, disorderly, or endangering manner but shall comply with the non-discriminatory policy in subsection (1) of this section. A driver may also refuse to transport a passenger with a service animal if the driver has a documented medical allergy.

(4) A TNC driver shall not transport a passenger under the age of fourteen (14) unless accompanied by a person over the age of eighteen (18).

(5) A TNC shall establish policies regarding TNC driver

behavior that shall include the following prohibitions:

(a) Being under the influence of alcohol or another substance or combination of substances that impair the driving ability while providing TNC services;

(b) Accepting a street hail by a potential rider;

(c) Directly soliciting a passenger or responding to a direct solicitation; or

(d) Providing services for cash.

(6) A driver shall immediately report the following to the driver's affiliated TNC:

(a) A refusal to transport a passenger and the reasons for the refusal within forty-eight (48) hours after the refusal where the refusal occurred after the ride had been accepted by the driver;

(b) Information regarding a driving citation, incident, or accident within twenty-four (24) hours after the event; or

(c) Information regarding a conviction within twenty-four (24) hours.

(7) A TNC shall provide the following information to the public on its Web site and mobile device application software:

(a) A schedule of its rates or the method used to calculate rates and peak pricing; and

(b) Information indicating a zero tolerance policy related to drug and alcohol usage by its drivers while performing TNC services and a passenger support telephone number or email address where a suspected violation may be immediately reported.

(8) A TNC shall provide the following information to a person requesting a ride through its mobile application:

(a) A statement indicating that cash shall not be accepted in payment for the transportation service and that the acceptance of cash may invalidate insurance coverage in the event of an accident;

(b) The expected cost of the trip if requested by a potential passenger;

(c) The first name and a photograph of the TNC driver accepting the ride request; and

(d) A photograph or description, including license plate number, of the vehicle that will be used for the ride.

(9) At the completion of the prearranged ride, a TNC shall electronically provide the passenger with a receipt showing:

(a) The point of origin and destination of the ride;

(b) The duration and distance of the ride;

(c) The cost of the ride broken down into base fare and additional charges; and

(d) The driver's first name.

(10) Hours of service for a TNC driver shall be the same as established in KRS 281.730(1).

Section 7. Terms of Service. (1) The TNC shall not require a hold harmless or indemnification clause in the terms of service for a TNC driver or passenger that may be used to evade the insurance requirements of this administrative regulation and KRS Chapter 281.

(2) A TNC shall not disclose to a third party the personally identifiable information of a user of the TNC's mobile application unless:

(a) The TNC obtains the user's consent to disclose personally identifiable information;

(b) The disclosure is required to comply with a legal obligation; or

(c) The disclosure is required to protect or defend the terms of use of the service or to investigate violations of the terms of use.

(3) A TNC may disclose a passenger's name and telephone number to the TNC driver in order to facilitate correct identification of the passenger by the driver, or to facilitate communication between the passenger and the driver.

Section 8. Penalties. (1) Penalties for a violation of the provisions of this administrative regulation shall be assessed pursuant to KRS 281.990.

(2) A TNC shall be responsible for an affiliated TNC driver's failure to comply with this administrative regulation if the driver's violation has been previously reported to the TNC in writing and the TNC has failed to take action within ten (10) days of the report.

Section 9. Incorporation by Reference. (1) "Transportation Network Company Authority Application," TC 95-627, November, 2014, is incorporated by reference.

(2) This material may be inspected, copied, or obtained, subject to applicable copyright law, at the Department of Vehicle Regulation, 200 Mero Street, Frankfort, Kentucky 40622, Monday through Friday, 8 a.m. to 4:30 p.m. This material may also be obtained by accessing the department's Web site at http://transportation.ky.gov/.

MICHAEL W. HANCOCK, P. E., Secretary
RODNEY KUHL, Commissioner
D. ANN DANGELO, Office of Legal Services

APPROVED BY AGENCY: December 4, 2014

FILED WITH LRC: December 5, 2014

CONTACT PERSON: D. Ann DAngelo, Asst. General Counsel, Transportation Cabinet, Office of Legal Services, 200 Mero Street, Frankfort, Kentucky 40622, phone (502) 564-7650, fax (502) 564-5238.

REGULATORY IMPACT ANALYSIS AND TIERING STATEMENT

Contact Person: Ann DAngelo

(1) Provide a brief summary of:

(a) What this administrative regulation does: This administrative regulation establishes the requirements for a transportation network company to operate in the state of Kentucky.

(b) The necessity of this administrative regulation: This administrative regulation is necessary to address the growing use of online mobile applications to connect riders with vehicles for hire.

(c) How this administrative regulation conforms to the content of the authorizing statutes: KRS 281.600 authorizes the cabinet to promulgate administrative regulations to establish requirements for the safe operation of motor vehicles and motor carriers.

(d) How this administrative regulation currently assists or will assist in the effective administration of the statutes: This administrative regulation will establish the regulatory requirements for the safe operation of a transportation network company.

(2) If this is an amendment to an existing administrative regulation, provide a brief summary of: This is a new administrative regulation.

(a) How the amendment will change this existing administrative regulation: n/a

(b) The necessity of the amendment to this administrative regulation: n/a

(c) How the amendment conforms to the content of the authorizing statutes: n/a

(d) How the amendment will assist in the effective administration of the statutes: n/a (a) n/a

(3) List the type and number of individuals, businesses, organizations, or state and local governments affected by this administrative regulation: This administrative regulation will affect companies desiring to operate as a transportation network company and the cabinet's Division of Motor Carriers.

(4) Provide an analysis of how the entities identified in question (3) will be impacted by either the implementation of this administrative regulation, if new, or by the change, if it is an amendment, including:

(a) List the actions that each of the regulated entities identified in question (3) will have to take to comply with this administrative regulation or amendment: A business desiring to operating as a transportation network company will be required to submit an application and attachments to the department; ensure that a criminal background check is performed for each driver; ensure that a vehicle safety check has been performed on vehicles used to transport the public; and maintain up to date files on drivers.

(b) In complying with this administrative regulation or amendment, how much will it cost each of the entities identified in question (3): A transportation network company applying to operate in Kentucky will submit a fee pursuant to KRS 281.620; an

annual renewal fee pursuant to KRS 281.650, and an annual license fee pursuant to KRS 186.281(3).

(c) As a result of compliance, what benefits will accrue to the entities identified in question (3): If compliant with the requirements of this regulation, businesses desiring to operate as transportation network companies will be granted operating authority.

(5) Provide an estimate of how much it will cost the administrative body to implement the administrative regulation:

(a) Initially: Approximately $7,500

(b) On a continuing basis: Approximately $1,000 annually

(6) What is the source of the funding to be used for the implementation and enforcement of this administrative regulation: road funds

(7) Provide an assessment of whether an increase in fees or funding will be necessary to implement this administrative regulation, if new, or by the change if it is an amendment: Fees shall be pursuant to statute.

(8) State whether or not this administrative regulation established any fees or directly or indirectly increased any fees: No fees are established by this regulation either directly or indirectly.

(9) TIERING: Is tiering applied? No. Tiering is not applied. All TNC applications for operating authority will be handled the same.

FISCAL NOTE ON STATE OR LOCAL GOVERNMENT

(1) What units, parts, or divisions of state or local government (including cities, counties, fire departments, or school districts) will be impacted by this administrative regulation? KYTC Division of Motor Carriers, Department of Vehicle Regulation

(2) Identify each state or federal statute or federal regulation that requires or authorizes the action taken by the administrative regulation. KRS 281.600

(3) Estimate the effect of this administrative regulation on the expenditures and revenues of a state or local government agency (including cities, counties, fire departments, or school districts) for the first full year the administrative regulation is to be in effect. Initial programming fees of approximately $7,500 will affect the expenditures and revenue of the Division of Motor Carriers at KYTC.

(a) How much revenue will this administrative regulation generate for the state or local government (including cities, counties, fire departments, or school districts) for the first year? This administrative regulation may generate approximate $9,000 annually. The amount is dependent on the number of TNC vehicles qualified under the administrative regulation.

(b) How much revenue will this administrative regulation generate for the state or local government (including cities, counties, fire departments, or school districts) for subsequent years? This administrative regulation is not expected to generate revenue.

(c) How much will it cost to administer this program for the first year? Approximately $7,500.

(d) How much will it cost to administer this program for subsequent years? Approximately $1,000.

Note: If specific dollar estimates cannot be determined, provide a brief narrative to explain the fiscal impact of the administrative regulation.

Revenues (+/-):

Expenditures (+/-):

Other Explanation:

ADMINISTRATIVE REGULATIONS AS AMENDED BY PROMULGATING AGENCY AND REVIEWING SUBCOMMITTEE

ARRS = Administrative Regulation Review Subcommittee
IJC = Interim Joint Committee

KENTUCKY HIGHER EDUCATION ASSISTANCE AUTHORITY
Division of Student and Administrative Services
(As Amended at ARRS, December 9, 2014)

11 KAR 3:100. Administrative wage garnishment.

RELATES TO: KRS 164.744(1), 164.748(4), (10), (20), 164.753(2), 34 C.F.R. 682.410(b)(9), 20 U.S.C. 1071-1087-2, 1095a

STATUTORY AUTHORITY: KRS 164.748(4), 164.753(2), 20 U.S.C. 1095a

NECESSITY, FUNCTION, AND CONFORMITY: Pursuant to KRS 164.744(1) and 164.748(2), the Kentucky Higher Education Assistance Authority has entered into agreements with the secretary to provide loan guarantees in accordance with 20 U.S.C. 1071 through 1087-2. 20 U.S.C. 1095a permits a student loan guarantee agency to garnish the disposable pay of a borrower to recover a loan guaranteed pursuant to 20 U.S.C. 1071 through 1087-2, notwithstanding a provision of state law. That section also permits the student loan guarantee agency to establish procedures for requesting and conducting a hearing related to the wage garnishment. KRS 164.748(10) authorizes the authority to collect from borrowers loans on which the authority has met its guarantee obligation, and KRS 164.748(20) authorizes the authority to conduct administrative hearings, exempt from KRS Chapter 13B, pertaining to wage garnishment. This administrative regulation establishes the procedures for implementing wage garnishment in accordance with requirements of the federal act.

Section 1. (1) Following payment of a claim by the authority to a participating lender by reason of the borrower's default in repayment of an insured student loan, the authority, acting through its executive director or other designee, may issue an administrative order for the withholding of the debtor's disposable pay, which order shall conform to the requirements of this section.

(2) This administrative regulation shall apply to a debtor who is either a borrower or an endorser of an insured student loan.

(3) An order for withholding of disposable pay shall not be issued under this section nor become effective less than thirty (30) days after the authority provides a written notice to the debtor by personal service or mail, addressed to the debtor at the residence or employment location last known to the authority. The notice shall include at least the following information:

(a) The name and address of the debtor;

(b) The amount of the debt determined by the authority to be due;

(c) Information sufficient to identify the basis for the debt;

(d) A statement of the intention of the authority to issue an order for withholding of disposable pay;

(e) A statement of the right to dispute the existence, [~~or~~] amount, or enforceability of the debt or the terms of a proposed repayment schedule under the garnishment order (other than a repayment schedule agreed to in writing pursuant to paragraph (g) of this subsection);

(f) A statement of the right to inspect and copy any records relating to the debt open to inspection in accordance with KRS 61.870 through 61.884;

(g) A statement of the opportunity to enter into a written agreement with the authority, on terms satisfactory to the authority, establishing a schedule for repayment of the debt;

(h) A statement that, unless there is good cause determined by the authority for the debtor's failure to timely request a hearing, the debtor's acquiescence to the withholding of disposable pay shall be presumed; and

(i) A statement that if the debtor requests a hearing, but fails to appear without good cause determined by the hearing officer, the hearing officer shall affirm the issuance of an order for withholding of disposable pay.

(4) An amount shall not be withheld from the disposable pay of an individual during the first twelve (12) consecutive months of reemployment commenced within twelve (12) months following an involuntary separation from employment.

(5) Establishment of a written repayment schedule in accordance with subsection (3)(g) of this section shall be***[deemed]***, for purposes of subsection (3)(e) of this section, conclusive acknowledgement by the debtor of the existence and amount of debt agreed to be paid.[~~(6) Service of the notice required by subsection (3) of this section shall be conclusively presumed to be effected five (5) days after mailing of the notice by the authority, unless the notice is returned to the authority undelivered by the postal service. The date of service of the notice shall otherwise be evidenced by affidavit of a person executing personal service or a delivery receipt.~~]

Section 2. (1)(a) A hearing shall be provided if the debtor, on or before the 30th[~~15th~~] day following the date on which[~~of service of~~] the notice required by Section 1(3) of this administrative regulation is mailed, files with the authority a written request for a hearing in accordance with procedures prescribed by this administrative regulation. The timely filing of a request for a hearing (evidenced by a legibly dated U.S. Postal Service postmark or mail receipt) shall automatically stay further collection activity under this administrative regulation pending the outcome of the hearing.

(b) If the debtor requests a hearing, but the request is not timely filed, a hearing shall be provided, but the request shall not stay further action pending the outcome of the hearing provided a decision is rendered in the case by the 60th day following receipt of the request for a hearing. ***If[~~In the event~~]*** a final decision is not entered within the sixty (60) day period following receipt of a request for a hearing, the withholding order shall be suspended on the 61st day until***[~~such time as~~]*** a final decision is entered.

(c) A hearing officer, appointed by the authority (who shall not be an individual under the supervision or control of the board other than an administrative law judge), shall conduct the hearing.

(d) The hearing shall be held during regular business hours: Monday through Friday between the hours of 9 a.m. and 4 p.m. Eastern Standard Time.

(e) A hearing officer shall voluntarily disqualify himself and withdraw from a case in which he cannot afford a fair and impartial hearing or consideration.

1. A party shall request the disqualification of a hearing officer by filing an affidavit, upon discovery of facts establishing grounds for a disqualification, stating the particular grounds upon which he claims that a fair and impartial hearing cannot be accorded.

2. The request for disqualification and the disposition of the request shall be a part of the official record of the proceeding.

3. Grounds for disqualification of a hearing officer shall include the following:

a. Participating in an ex parte communication which would prejudice the proceedings;

b. Having a pecuniary interest in the outcome of the proceeding; or

c. Having a personal bias toward a party to a proceeding which would cause a prejudgment on the outcome of the proceeding.

(f) A dispute hearing shall be conducted in Franklin County or another location agreed to by the parties.

(g) In lieu of an in-person hearing, upon request of the debtor, a hearing may be conducted by telephone or the hearing officer may conduct a review based solely upon submission of written material by both the debtor and the authority. An in-person or telephonic hearing shall be mechanically, electronically, or stenographically recorded.

(h) Unless required for the disposition of an ex parte matter specifically authorized by this administrative regulation, a hearing

officer shall not communicate off the record with a party to the hearing concerning a substantive issue, while the proceeding is pending.

(2)(a) The hearing officer's decision, reason therefore**,** and an explanation of the appeal process shall be rendered in writing no more than sixty (60) days after receipt by the authority of the request for the hearing. The decision shall establish the debtor's liability, if any, for repayment of the debt and the amount to be withheld from the debtor's disposable pay.

(b) Subject to subsection (3)(b) of this section, the hearing officer's decision shall be final and conclusive pertaining to the right of the authority to issue an administrative order for the withholding of the debtor's disposable pay.

(c) A person, upon request, shall receive a copy of the official record at the cost of the requester. The party requesting a recording or transcript of the hearing shall be responsible for transcription costs. The official record of the hearing shall consist of:

1. All notices, pleadings, motions, and intermediate rulings;

2. Any prehearing order;

3. Evidence received and considered;

4. A statement of matters officially noticed;

5. Proffers of proof and objections and rulings thereon;

6. Ex parte communications placed upon the record by the hearing officer;

7. A recording or transcript of the proceedings; and

8. The hearing officer's decision or an order of the hearing officer issued pursuant to Section 3(2)(e) of this administrative regulation.

(3)(a) Following the issuance of the hearing officer's decision, the debtor or the authority may petition the board to review the decision.

(b) An adverse decision by the hearing officer shall be appealed in writing to the board not later than twenty (20) calendar days after the date of the hearing officer's decision. A petition for review of the hearing officer's decision shall be timely filed if received by the executive director within twenty (20) calendar days after the date of the hearing officer's decision. If there is no appeal to the board within twenty (20) days, the findings of the hearing officer shall be conclusive and binding upon the parties.

(c) A petition for review of the hearing officer's decision shall not stay a final order pending the outcome of the review. If the debtor's liability is established by the hearing officer's decision, an administrative order for withholding of disposable pay shall be issued by the authority within sixty (60) days after the date of the hearing officer's decision. If the debtor petitions the board to review the hearing officer's decision and obtains reversal, modification, or remand of the hearing officer's decision, the authority shall return to the debtor any money received pursuant to the withholding order contrary to the final order of the board.

(d) The respondent may, within ten (10) calendar days from the date the petition was received by the executive director, provide a brief statement to the board responding to the petition of review. The response shall be timely filed if received by the executive director within ten (10) calendar days from receipt by the executive director of the petition for review.

(e) A petition for review of the hearing officer's decision shall contain the following information:

1. A concise statement of the reason that the petitioner asserts as the basis pursuant to paragraph (g) of this subsection for reversing, modifying, or remanding the hearing officer's decision or an order of the hearing officer issued pursuant to Section 3(2)(e) of this administrative regulation;

2. A statement specifying the part of the official record that the petitioner relies upon to support reversing, modifying, or remanding the hearing officer's decision pursuant to paragraph (g) of this subsection; and

3. A statement of whether the petitioner believes that oral argument to the board is necessary.

(f) The board shall review the hearing officer's decision at its next regularly scheduled meeting convened at least thirty (30) days after the petition for review of the hearing officer's decision is received or at a special meeting convened for that purpose within ninety (90) days after receipt of the petition for review of the hearing officer's decision, whichever first occurs.

(g) The board shall decide the dispute upon the official record, unless there is fraud or misconduct involving a party, and may consider oral arguments by the debtor and the authority. The board shall:

1. Not substitute its judgment for that of the hearing officer as to the weight of the evidence on questions of fact; and

2.a. Uphold the hearing officer's decision unless it is clearly unsupported by the evidence and the applicable law;

b. Reject or modify, in whole or in part, the hearing officer's decision; or

c. Remand the matter, including an order of the hearing officer issued pursuant to Section 3(2)(e) of this administrative regulation, in whole or in part, to the hearing officer for further proceedings***[as appropriate]*** if it finds the hearing officer's final order is:

(i) In violation of constitutional or statutory provisions;

(ii) In excess of the statutory authority of the agency;

(iii) Without support of substantial evidence on the whole record;

(iv) Arbitrary, capricious, or characterized by abuse of discretion; or

(v) Based on an ex parte communication which substantially prejudiced the rights of a party and likely affected the outcome of the hearing.

(h) The final order of the board shall be in writing. If the final order differs from the hearing officer's decision, it shall include separate statements of findings of fact and conclusions of law.

(4) The remedies provided in this section shall not:

(a) Preclude the use of other judicial or administrative remedies available to the authority under state or federal law; and

(b) Be construed to stay the use of another remedy.

Section 3. Hearing Procedure. (1) The debtor shall have the right to be heard by the hearing officer, be represented by counsel, present evidence, cross examine, and make both opening and closing statements.

(2)(a) Upon request of a party, the hearing officer may issue a subpoena for the production of a document or attendance of a witness.

(b)1. Not more than ten (10) business days after the date of filing the request for a hearing or a review of written material, the debtor shall submit to the counsel for the authority a written statement specifically stating the basis of dispute.

2. Not less than fifteen (15) business days prior to the hearing, the parties shall:

a. Confer and jointly stipulate the issues that are in controversy to be resolved by the hearing officer;

b. Discuss the possibility of informal resolution of the dispute;

c. Exchange a witness list of the names, addresses, and phone numbers of each witness expected to testify at the hearing and a brief summary of the testimony of each witness that the party expects to introduce into evidence; and

d. Exchange an exhibit list identifying documents to be admitted into evidence at the hearing and provide a legible copy of all exhibits.

3.a. If the debtor is unavailable or otherwise fails to confer and jointly stipulate the issues pursuant to subparagraph 2 of this paragraph, the authority shall serve upon the debtor proposed stipulation of issues. If within five (5) calendar days, the debtor fails to respond to the proposed stipulation of issues, the debtor shall be precluded from raising an additional issue not identified in the proposed stipulation of issues.

b. If the debtor is unavailable or otherwise fails to cooperate in a timely manner for the exchange of the witness or exhibit lists, the debtor shall be precluded from admitting the information as part of the evidence at the hearing.

4. The authority shall provide to the hearing officer the documentation submitted in accordance with subparagraph 1 of this paragraph and shall report to the hearing officer the results of the discussions between the parties described in subparagraphs 2 and 3 of this paragraph.

5. Additional time for compliance with the requirements of this

paragraph may be granted by the hearing officer, upon request, if it does not prejudice the rights of the authority or delay the rendering of a hearing decision within the time prescribed in this subsection.

6. If the debtor requests a hearing, but the debtor's written statement and supporting documentation, considered from a viewpoint most favorable to the debtor, does not reflect a genuine issue of fact or prima facie defense to the legal enforceability of the authority's claim, the hearing officer, on petition of the authority and notice to the debtor, may enter an order dismissing the request for a hearing and authorizing issuance of the order described in Section 5 of this administrative regulation.

(c) Facts recited in the authority's notice pursuant to Section 1(3) of this administrative regulation that are not denied shall be deemed admitted. Each party shall remain under an obligation to disclose new or additional items of evidence or witnesses which may come to their attention as soon as practicable.

(d)1. Either party, without leave of the hearing officer, may depose a witness, upon reasonable notice to the witness and the opposing party, and submit to the opposing party interrogatories or request for admissions.

2. The party receiving interrogatories or request for admissions shall respond within fifteen (15) calendar days.

3. Each matter of which an admission is requested shall be deemed admitted unless, within fifteen (15) days after service of the request or a shorter or longer time that the hearing officer may allow, the party to whom the request is directed serves upon the party requesting the admission a written answer or objection addressed to the matter.

(e) Sufficient grounds for entry of an appropriate order by the hearing officer, including postponement, exclusion of evidence, dismissal of the appeal, quashing the withholding order, or vacating the stay, shall exist if there is:

1. Noncompliance with this subsection;

2. Failure of the authority to:

a. Timely appoint a hearing officer; or

b. Respond to a request for inspection of records; or

3. Failure of the debtor to submit information in accordance with paragraph (b) of this subsection.

(3) Order of proceeding.

(a) The hearing officer shall:

1. Convene an in-person or telephonic hearing;

2. Identify the parties to the action and the persons participating;

3. Admit into evidence the notice required by Section 1(3) of this administrative regulation and the debtor's statement and the stipulations required by subsection (2)(b)1 and 2 of this section;

4. Solicit from the parties and dispose of any objections or motions;

5. Accept into evidence any documentary evidence not objected to;

6. Solicit opening statements; and

7. Proceed with the taking of proof.

(b) The taking of proof shall commence first by the debtor and then by the authority, with opportunities for cross-examination, rebuttal, and closing statements.

(4) Rules of evidence.

(a) All testimony shall be made under oath or affirmation.

1. The hearing officer shall not admit evidence that is excludable as a violation of an individual's constitutional or statutory rights or a privilege recognized by the courts of the Commonwealth.

2. Statutes or judicial rules pertaining to the admission of evidence in a judicial proceeding shall not apply to a hearing under this section.

3. The hearing officer may receive evidence deemed reliable and relevant, including evidence that would be considered hearsay if presented in court, except that hearsay evidence shall not be sufficient in itself to support the hearing officer's decision.

4. A copy of a document shall be admissible if:

a. There is minimal authentication to establish a reasonable presumption of its genuineness and accuracy; or

b. It is admitted without objection.

5. The hearing officer may exclude evidence deemed unreliable, irrelevant, incompetent, immaterial, or unduly repetitious.

(b) An objection to an evidentiary offer may be made by any party and shall be noted in the record.

(c) The hearing officer:

1. May take official notice of:

a. Statutes and administrative regulations;

b. Facts which are not in dispute; and

c. Generally-recognized technical or scientific facts;

2. Shall notify all parties, either before or during the hearing of a fact so noticed and its source; and

3. Shall give each party an opportunity to contest facts officially noticed.

(d) At the discretion of the hearing officer, the parties may be allowed up to fifteen (15) days following the hearing to submit written arguments or briefs.

(5) Upon request of either party, the record of the hearing shall be transcribed, and shall be available to the parties at their own expense.

(6) Burden of proof.

(a) The authority shall have the burden to establish the existence and amount of the debt.

(b) The debtor shall have the burden to establish an affirmative defense.

(c) The party with the burden of proof on an issue shall have the burden of going forward and the ultimate burden of persuasion as to that issue. The ultimate burden of persuasion shall be met by a prima facie establishment of relevant, uncontroverted facts or, if relevant facts are disputed, a preponderance of evidence in the record.

(d) Failure to meet the burden of proof shall be grounds for a summary order from the hearing officer.

Section 4. Defenses. (1) Except as provided in subsection (2) of this section, a debtor may assert a defense to the issuance of an administrative order to withhold the debtor's disposable pay, legal or equitable, pertaining to the existence,[~~or~~] amount, or enforceability of the debt or the terms of a proposed repayment schedule under the garnishment order (other than a repayment schedule agreed to in writing pursuant to Section 1(3)(g) of this administrative regulation).

(2) The hearing officer shall not consider as a defense a question of law or fact that has previously been adjudicated by a court of competent jurisdiction or by an independent third-party trier of fact in an administrative proceeding involving the debtor and the authority pertaining to the existence, amount, or the debtor's liability on the particular debt in question or the terms of a prior repayment schedule.

(3) If the debtor asserts as a defense a question of law or fact that was previously raised in an administrative proceeding before the authority pursuant to 11 KAR 4:030 or 11 KAR 4:050, the hearing officer:

(a) Shall:

1. Consider the matter; and

2. Give deference to the prior decision by the authority in the same manner that a court would give deference in reviewing the decision of an administrative agency; and

(b) May reverse the prior decision if the debtor presents evidence that:

1. Circumstances have changed or new information is available; or

2. The prior decision:

a. Substantially disregarded or ignored the defense; or

b. Was arbitrary, capricious, not supported by the facts, or made through fraud.

(4) If the debtor asserts as a defense a claim of entitlement to discharge of the particular debt pursuant to 34 C.F.R. 682.402, except for reason of bankruptcy, but has not previously sought discharge by the authority for that specific reason, the hearing officer shall stay the hearing for a period sufficient to permit the debtor to submit documentation to the authority for a determination of eligibility for entitlement to the discharge. At the expiration of the period of stay, the hearing officer shall review the circumstances

and:

(a) Uphold the right of the authority to issue an order of wage withholding if the debtor has failed to submit documentation to the authority for review of entitlement to discharge;

(b) Dismiss the request for hearing if the debtor has submitted documentation and the authority has approved discharge of the debt; or

(c) Proceed with the hearing if the debtor submitted documentation and the authority denied discharge, except that the hearing officer shall consider the defense of entitlement to discharge in accordance with subsection (3) of this section.

(5) If the debtor asserts as a defense a claim that the debt was dischargeable in a previous bankruptcy pursuant to 11 U.S.C. 523(a)(8), but the debtor did not previously seek discharge by the bankruptcy court, the hearing officer shall stay the hearing for a period sufficient to permit the debtor to reopen the bankruptcy case. At the expiration of the period of stay, the hearing officer shall review the circumstances and:

(a) Uphold the right of the authority to issue an order of wage withholding if the debtor has failed to obtain the bankruptcy court's permission to reopen the bankruptcy case to seek discharge of the particular debt; or

(b) Dismiss the request for hearing if the bankruptcy court has reopened the bankruptcy case to consider discharge of the particular debt.

(6)(a) If the debtor asserts as a defense a claim that withholding of his disposable pay would constitute an extreme financial hardship, the debtor shall submit documentation of all available resources and actual expenses and shall have the burden of demonstrating the necessity of actual expenses.

(b) The hearing officer shall compare the debtor's available resources and the necessary expenses and current debt obligations of the debtor and debtor's dependents. The hearing officer shall determine that extreme financial hardship exists if the debtor currently is not able to provide at least minimal subsistence for the debtor and debtor's dependents that could be claimed on a federal income tax return. The hearing officer shall consider as available resources of the debtor income of the debtor, the debtor's spouse, and debtor's dependents from all sources, including nontaxable income and government benefits, expenses paid on behalf of the debtor by another person, and the cash value of any current liquid assets, such as bank accounts and investments. The hearing officer shall consider the claim of extreme financial hardship in accordance with the presumptions established in this paragraph.

1. Withholding of an amount of disposable pay shall constitute an extreme financial hardship if the debtor's available resources from all sources do not exceed the applicable poverty guideline, multiplied by 125 percent, based on the debtor's family size and state of residence. The poverty guidelines to be utilized for this purpose ***shall be the latest federal poverty measurement guidelines issued[****~~are the most recently published version promulgated~~****]*** by the ***United States[****~~Federal~~****]*** Department ***of[****~~for~~****]*** Health and Human Services ***and published annually in the Federal Register,*** under the authority of 42 U.S.C. 9902(2).[~~:~~

~~a. The debtor resides in the District of Columbia or a state other than Alaska or Hawaii and the debtor's available resources do not exceed the applicable poverty guideline, multiplied by 125 percent, based on the debtor's family size:~~

~~Size of family unit~~	~~Poverty guideline~~
~~1~~	~~$11,490~~
~~2~~	~~$15,510~~
~~3~~	~~$19,530~~
~~4~~	~~$23,550~~
~~5~~	~~$27,57~~
~~6~~	~~$31,590~~
~~7~~	~~$35,610~~
~~8~~	~~$39,630~~
~~Each additional person~~	~~Add $4,020~~

~~b. The debtor resides in Alaska and the debtor's available resources do not exceed the applicable poverty guideline, multiplied by 125 percent, based on the debtor's family size:~~

~~Size of family unit~~	~~Poverty guideline~~
~~1~~	~~$14,350~~
~~2~~	~~$19,380~~
~~3~~	~~$24,410~~
~~4~~	~~$29,440~~
~~5~~	~~$34,470~~
~~6~~	~~$39,500~~
~~7~~	~~$44,530~~
~~8~~	~~$49,560~~
~~Each additional person~~	~~Add $5,030~~

~~c. The debtor resides in Hawaii and the debtor's available resources do not exceed the applicable poverty guideline, multiplied by 125 percent, based on the debtor's family size:~~

~~Size of family unit~~	~~Poverty guideline~~
~~1~~	~~$13,230~~
~~2~~	~~$17,850~~
~~3~~	~~$22,470~~
~~4~~	~~$27,090~~
~~5~~	~~$31,710~~
~~6~~	~~$36,330~~
~~7~~	~~$40,950~~
~~8~~	~~$45,570~~
~~Each additional person~~	~~Add $4,620~~]

2. The debtor's actual monthly expenses shall be compared to the most recently revised Collection Financial Standards issued by the Internal Revenue Service based on the debtor's family size and state of residence. Actual expenditures by the debtor's family that exceed the applicable amount for a category shall be presumed unnecessary.[~~a. If the debtor resides in Connecticut, Maine, Massachusetts, New Hampshire, New Jersey, New York, Pennsylvania, Rhode Island, or Vermont, except for a metropolitan area listed in clause b of this subparagraph, actual annual expenditures by the debtor's family that exceed the applicable amount for a category, based on the debtor's available resources, shall be presumed unnecessary:~~

~~Debtor's Available Resources~~	~~Less than $5,000~~	~~$5,000 to $9,999~~	~~$10,000 to $14,999~~	~~$15,000 to $19,999~~	~~$20,000 to $29,999~~	~~$30,000 to $39,999~~	~~$40,000 to $49,999~~	~~$50,000 to $69,999~~	~~$70,000 and over~~
~~Annual Expenditures~~									
~~Owned dwellings~~	~~1,068~~	~~1,170~~	~~1,589~~	~~2,789~~	~~3,390~~	~~4,494~~	~~4,962~~	~~7,108~~	~~13,516~~
~~Rented dwellings~~	~~4,530~~	~~3,803~~	~~3,778~~	~~3,854~~	~~4,191~~	~~4,581~~	~~4,265~~	~~3,984~~	~~2,670~~
~~Other lodging~~	~~343~~	~~54~~	~~248~~	~~92~~	~~338~~	~~321~~	~~358~~	~~607~~	~~1,488~~
~~Utilities, fuels, and public services~~	~~1,642~~	~~1,862~~	~~2,086~~	~~2,794~~	~~3,136~~	~~3,390~~	~~3,759~~	~~4,222~~	~~5,513~~
~~Household operations~~	~~288~~	~~330~~	~~3,001~~	~~488~~	~~586~~	~~778~~	~~696~~	~~957~~	~~2,143~~

~~Housekeeping and miscellaneous supplies~~	~~286~~	~~255~~	~~293~~	~~362~~	~~389~~	~~362~~	~~464~~	~~547~~	~~1,042~~
~~Household furnishings and equipment~~	~~463~~	~~452~~	~~380~~	~~540~~	~~793~~	~~940~~	~~1,071~~	~~1,666~~	~~2,563~~
~~Vehicle purchases (net outlay)~~	~~657~~	~~870~~	~~161~~	~~1,562~~	~~1,118~~	~~1,723~~	~~2,345~~	~~2,622~~	~~4,074~~
~~Gasoline and motor oil~~	~~693~~	~~711~~	~~647~~	~~962~~	~~1,442~~	~~1,678~~	~~2,229~~	~~2,357~~	~~3,313~~
~~Vehicle maintenance and repairs~~	~~217~~	~~264~~	~~245~~	~~426~~	~~435~~	~~572~~	~~783~~	~~846~~	~~1,301~~
~~Vehicle insurance~~	~~751~~	~~584~~	~~437~~	~~519~~	~~630~~	~~826~~	~~722~~	~~1,287~~	~~1,386~~
~~Vehicle rental, lease, license and other charges~~	~~148~~	~~1137~~	~~87~~	~~166~~	~~314~~	~~350~~	~~439~~	~~469~~	~~1,130~~
~~Public transportation~~	~~269~~	~~263~~	~~215~~	~~269~~	~~320~~	~~470~~	~~512~~	~~569~~	~~1,274~~

~~b. If the debtor resides in one (1) of the following metropolitan areas, actual annual expenditures by the debtor's family that exceed the applicable amount for a category shall be presumed unnecessary:~~

	~~New York~~	~~Philadelphia~~	~~Boston~~
~~Owned dwellings~~	~~9,312~~	~~8,158~~	~~8,260~~
~~Rented dwellings~~	~~5,360~~	~~3,218~~	~~3,499~~
~~Other lodging~~	~~807~~	~~631~~	~~1,104~~
~~Utilities, fuels, and public services~~	~~4,273~~	~~4,442~~	~~4,121~~
~~Household operations~~	~~1,384~~	~~1,201~~	~~1,569~~
~~Housekeeping and miscellaneous supplies~~	~~610~~	~~701~~	~~641~~
~~Household furnishings and equipment~~	~~1,408~~	~~1,460~~	~~1,859~~
~~Vehicle purchases (net outlay)~~	~~1,891~~	~~2,289~~	~~3,382~~
~~Gasoline and motor oil~~	~~2,006~~	~~2,147~~	~~2,489~~
~~Other vehicle expenses (repairs, insurance, lease, license, and other charges)~~	~~2,813~~	~~2,457~~	~~2,579~~
~~Public transportation~~	~~1,133~~	~~444~~	~~678~~

~~3.a. If the debtor resides in Illinois, Indiana, Iowa, Kansas, Michigan, Minnesota, Missouri, Nebraska, North Dakota, Ohio, South Dakota, or Wisconsin, except for a metropolitan area listed in clause b of this subparagraph, actual annual expenditures by the debtor's family that exceed the applicable amount for a category, based on the debtor's available resources, shall be presumed unnecessary:~~

~~Debtor's Available Resources~~	~~Less than $5,000~~	~~$5,000 to $9,999~~	~~$10,000 to $14,999~~	~~$15,000 to $19,999~~	~~$20,000 to $29,999~~	~~$30,000 to $39,999~~	~~$40,000 to $49,999~~	~~$50,000 to $69,999~~	~~$70,000 and over~~
~~Annual Expenditures~~									
~~Owned dwelling~~	~~1,201~~	~~1,145~~	~~1,519~~	~~2,324~~	~~2,744~~	~~4,265~~	~~4,905~~	~~6,570~~	~~10,685~~
~~Rented dwellings~~	~~3,164~~	~~2,675~~	~~2,880~~	~~2,816~~	~~2,807~~	~~2,477~~	~~2,079~~	~~1,669~~	~~1,140~~
~~Other lodging~~	~~439~~	~~248~~	~~113~~	~~135~~	~~296~~	~~341~~	~~270~~	~~542~~	~~1,295~~
~~Utilities, fuels and public services~~	~~1,525~~	~~1,705~~	~~2,074~~	~~2,540~~	~~2,999~~	~~3,297~~	~~3,576~~	~~3,761~~	~~4,587~~
~~Household operations~~	~~286~~	~~220~~	~~305~~	~~490~~	~~471~~	~~539~~	~~720~~	~~834~~	~~1,739~~
~~Housekeeping and miscellaneous supplies~~	~~264~~	~~257~~	~~280~~	~~404~~	~~407~~	~~497~~	~~613~~	~~590~~	~~1,037~~
~~Household furnishings and equipment~~	~~537~~	~~355~~	~~380~~	~~585~~	~~709~~	~~856~~	~~1,085~~	~~1,555~~	~~2,556~~
~~Vehicle purchases (net outlay)~~	~~822~~	~~1,166~~	~~444~~	~~543~~	~~1,209~~	~~2,070~~	~~2,214~~	~~2,748~~	~~4,871~~
~~Gasoline and motor oil~~	~~1,024~~	~~988~~	~~1,080~~	~~1,267~~	~~1,792~~	~~2,109~~	~~2,395~~	~~2,683~~	~~3,501~~
~~Vehicle maintenance and repairs~~	~~212~~	~~245~~	~~349~~	~~432~~	~~589~~	~~582~~	~~798~~	~~819~~	~~1,213~~
~~Vehicle insurance~~	~~316~~	~~62~~	~~367~~	~~687~~	~~672~~	~~680~~	~~1,060~~	~~789~~	~~1,277~~
~~Vehicle lease, license, and other charges~~	~~140~~	~~99~~	~~137~~	~~160~~	~~251~~	~~280~~	~~324~~	~~352~~	~~755~~

~~Public transportation~~	~~139~~	~~147~~	~~151~~	~~184~~	~~191~~	~~219~~	~~225~~	~~364~~	~~943~~

~~b. If the debtor resides in one (1) of the following metropolitan areas, actual annual expenditures by the debtor's family that exceed the applicable amount for a category shall be presumed unnecessary:~~

	~~Chicago~~	~~Detroit~~	~~Minneapolis St. Paul~~	~~Cleveland~~
~~Owned dwelling~~	~~8,770~~	~~6,455~~	~~7,407~~	~~5,569~~
~~Rented dwelling~~	~~3,156~~	~~2,240~~	~~2,174~~	~~2,315~~
~~Other lodging~~	~~1,137~~	~~646~~	~~671~~	~~670~~
~~Utilities, fuels, and public services~~	~~3,981~~	~~4,036~~	~~3,315~~	~~3,434~~
~~Household operations~~	~~1,332~~	~~891~~	~~1,260~~	~~577~~
~~Housekeeping and miscellaneous supplies~~	~~666~~	~~631~~	~~883~~	~~728~~
~~Household furnishings and equipment~~	~~1,478~~	~~1,368~~	~~1,877~~	~~1,360~~
~~Vehicle purchases (net outlay)~~	~~2,624~~	~~2,705~~	~~2,908~~	~~2,598~~
~~Gasoline and motor oil~~	~~2,445~~	~~2,606~~	~~2,538~~	~~2,086~~
~~Other vehicle expenses (repairs, insurance, lease, license, and other charges)~~	~~2,412~~	~~2,956~~	~~2,818~~	~~2,572~~
~~Public transportation~~	~~861~~	~~523~~	~~545~~	~~559~~

~~4.a. If the debtor resides in Alabama, Arkansas, Delaware, District of Columbia, Florida, Georgia, Kentucky, Louisiana, Maryland, Mississippi, North Carolina, Oklahoma, South Carolina, Tennessee, Texas, Virginia, or West Virginia, except for a metropolitan area listed in clause b of this subparagraph, actual annual expenditures by the debtor's family that exceed the applicable amount for a category, based on the debtor's available resources, shall be presumed unnecessary:~~

~~Debtor's Available Resources~~	~~Less than $5,000~~	~~$5,000 to $9,999~~	~~$10,000 to $14,999~~	~~$15,000 to $19,999~~	~~$20,000 to $29,999~~	~~$30,000 to $39,999~~	~~$40,000 to $49,999~~	~~$50,000 to $69,999~~	~~$70,000 and over~~
~~Owned dwelling~~	~~1,524~~	~~1,354~~	~~1,535~~	~~1,758~~	~~2,463~~	~~3,152~~	~~4,281~~	~~5,327~~	~~10,313~~
~~Rented dwelling~~	~~2,631~~	~~2,682~~	~~2,559~~	~~2,785~~	~~3,047~~	~~2,876~~	~~2,888~~	~~2,301~~	~~1,694~~
~~Other lodging~~	~~117~~	~~264~~	~~61~~	~~99~~	~~204~~	~~191~~	~~288~~	~~397~~	~~1,246~~
~~Utilities, fuels, and other charges~~	~~2,349~~	~~2,442~~	~~2,602~~	~~3,107~~	~~3,257~~	~~3,522~~	~~3,744~~	~~4,189~~	~~5,136~~
~~Household operations~~	~~301~~	~~308~~	~~340~~	~~456~~	~~547~~	~~696~~	~~755~~	~~957~~	~~1,811~~
~~Housekeeping and miscellaneous supplies~~	~~235~~	~~348~~	~~342~~	~~461~~	~~424~~	~~481~~	~~502~~	~~632~~	~~845~~
~~Household furnishings and equipment~~	~~534~~	~~612~~	~~513~~	~~704~~	~~849~~	~~1,166~~	~~1,104~~	~~1,382~~	~~2,529~~
~~Vehicle purchases (net outlay)~~	~~831~~	~~846~~	~~421~~	~~1,000~~	~~1,446~~	~~2,344~~	~~2,374~~	~~2,726~~	~~5,163~~
~~Gasoline and motor oil~~	~~1,115~~	~~1,098~~	~~1,206~~	~~1,625~~	~~1,944~~	~~2,188~~	~~2,625~~	~~2,878~~	~~3,658~~
~~Vehicle maintenance and repairs~~	~~268~~	~~348~~	~~305~~	~~376~~	~~469~~	~~480~~	~~649~~	~~752~~	~~1,170~~
~~Vehicle insurance~~	~~351~~	~~443~~	~~562~~	~~854~~	~~750~~	~~821~~	~~1,116~~	~~1,263~~	~~1,544~~
~~Vehicle lease, license, and other charges~~	~~128~~	~~83~~	~~105~~	~~132~~	~~153~~	~~219~~	~~261~~	~~263~~	~~584~~
~~Public transportation~~	~~125~~	~~86~~	~~100~~	~~116~~	~~148~~	~~147~~	~~213~~	~~276~~	~~734~~

~~b. If the debtor resides in one (1) of the following metropolitan areas, actual annual expenditures by the debtor's family that exceed the applicable amount for a category shall be presumed unnecessary:~~

	~~Washington, D.C.~~	~~Baltimore~~	~~Atlanta~~	~~Miami~~	~~Dallas Forth Worth~~	~~Houston~~
~~Owned dwelling~~	~~10,724~~	~~8,829~~	~~7,301~~	~~5,245~~	~~6,407~~	~~6,487~~
~~Rented dwelling~~	~~4,309~~	~~2,921~~	~~2,879~~	~~4,813~~	~~3,371~~	~~2,853~~
~~Other lodging~~	~~1,596~~	~~1,196~~	~~502~~	~~334~~	~~470~~	~~585~~
~~Utilities, fuels, and public services~~	~~4,254~~	~~4,424~~	~~4,348~~	~~3,496~~	~~4,461~~	~~4,472~~
~~Household operations~~	~~1,740~~	~~1,024~~	~~1,166~~	~~701~~	~~1,237~~	~~1,483~~
~~Housekeeping and miscellaneous supplies~~	~~720~~	~~687~~	~~724~~	~~458~~	~~739~~	~~620~~
~~Household furnishings and equipment~~	~~2,247~~	~~1,615~~	~~,1528~~	~~865~~	~~1,557~~	~~1,788~~
~~Vehicle purchases (net outlay)~~	~~3,176~~	~~1,962~~	~~2,761~~	~~1,149~~	~~3,175~~	~~2,542~~
~~Gasoline and motor oil~~	~~2,479~~	~~2,401~~	~~2,645~~	~~2,268~~	~~2,918~~	~~3,050~~
~~Other vehicle expenses (repairs, insurance, lease, license, and other charges)~~	4,009	~~1,877~~	~~2,060~~	~~2,205~~	~~2,833~~	~~2,975~~

~~Public transportation~~	~~1,224~~	~~366~~	~~533~~	~~418~~	~~388~~	~~578~~

~~5.a. If the debtor resides in Alaska, Arizona, California, Colorado, Hawaii, Idaho, Montana, Nevada, New Mexico, Oregon, Utah, Washington, or Wyoming, except for a metropolitan area listed in clause b of this paragraph, actual annual expenditures by the debtor's family that exceed the applicable amount for a category, based on the debtor's available resources, shall be presumed unnecessary:~~

~~Debtor's Available Resources~~	~~Less than $5,000~~	~~$5,000 to $9,999~~	~~$10,000 to $14,999~~	~~$15,000 to $19,999~~	~~$20,000 to $29,999~~	~~$30,000 to $39,999~~	~~$40,000 to $49,999~~	~~$50,000 to $69,999~~	~~$70,000 and over~~
~~Annual Expenditures~~									
~~Owned dwelling~~	~~3,393~~	~~1,433~~	~~1,892~~	~~2,070~~	~~2,634~~	~~4,211~~	~~5,089~~	~~7,039~~	~~13,133~~
~~Rented dwelling~~	~~3,532~~	~~4,604~~	~~4,693~~	~~4,594~~	~~4,840~~	~~4,640~~	~~5,061~~	~~4,510~~	~~3,421~~
~~Other lodging~~	~~509~~	~~199~~	~~128~~	~~153~~	~~249~~	~~378~~	~~438~~	~~527~~	~~1,541~~
~~Utilities, fuels, and public services~~	~~2,139~~	~~1,558~~	~~1,843~~	~~2,331~~	~~2,516~~	~~2,958~~	~~3,237~~	~~3,604~~	~~4,453~~
~~Household operations~~	~~989~~	~~442~~	~~518~~	~~723~~	~~818~~	~~783~~	~~953~~	~~1,008~~	~~2,253~~
~~Housekeeping and miscellaneous supplies~~	~~384~~	~~356~~	~~359~~	~~362~~	~~438~~	~~420~~	~~574~~	~~642~~	~~913~~
~~Household furnishings and equipment~~	~~692~~	~~596~~	~~671~~	~~696~~	~~764~~	~~1,166~~	~~1,094~~	~~1,708~~	~~2,803~~
~~Vehicle purchases (net outlay)~~	~~1,111~~	~~65~~	~~524~~	~~993~~	~~1,331~~	~~1,807~~	~~1,410~~	~~2,374~~	~~4,667~~
~~Gasoline and motor oil~~	~~1,100~~	~~1,121~~	~~1,157~~	~~1,323~~	~~1,655~~	~~2,097~~	~~2,203~~	~~2,735~~	~~3,269~~
~~Vehicle maintenance and repairs~~	~~402~~	~~460~~	~~411~~	~~577~~	~~515~~	~~664~~	~~746~~	~~941~~	~~1,425~~
~~Vehicle insurance~~	~~587~~	~~277~~	~~416~~	~~618~~	~~531~~	~~946~~	~~834~~	~~1,259~~	~~1,410~~
~~Vehicle lease, license, and other charges~~	~~195~~	~~158~~	~~168~~	~~234~~	~~221~~	~~373~~	~~373~~	~~471~~	~~849~~
~~Public transportation~~	~~292~~	~~196~~	~~201~~	~~224~~	~~229~~	~~427~~	~~445~~	~~539~~	~~1,257~~

~~b. If the debtor resides in one (1) of the following metropolitan areas, actual annual expenditures by the debtor's family that exceed the applicable amount for a category shall be presumed unnecessary:~~

	~~Los Angeles~~	~~San Francisco~~	~~San Diego~~	~~Seattle~~	~~Phoenix~~
~~Owned dwelling~~	~~6,808~~	~~11,051~~	~~8,075~~	~~8,557~~	~~5,879~~
~~Rented dwelling~~	~~6,235~~	~~6,594~~	~~6,694~~	~~3,631~~	~~2,772~~
~~Other lodging~~	~~731~~	~~1,537~~	~~441~~	~~1,424~~	~~584~~
~~Utilities, fuels, and public services~~	~~3,150~~	~~3,318~~	~~3,251~~	~~3,630~~	~~3,832~~
~~Household operations~~	~~1,447~~	~~2,201~~	~~1,210~~	~~1,677~~	~~1,098~~
~~Housekeeping and miscellaneous supplies~~	~~644~~	~~604~~	~~488~~	~~688~~	~~762~~
~~Household furnishings and equipment~~	~~1,420~~	~~1,684~~	~~1,480~~	~~1,951~~	~~1,714~~
~~Vehicle purchases (net outlay)~~	~~2,464~~	~~2,351~~	~~2,106~~	~~3,390~~	~~3,046~~
~~Gasoline and motor oil~~	~~2,615~~	~~2,340~~	~~2,673~~	~~2,411~~	~~2,409~~
~~Other vehicle expenses (repairs, insurance, lease, license, and other charges)~~	~~3,079~~	~~3,417~~	~~2,651~~	~~2,502~~	~~2,546~~
~~Public transportation~~	~~626~~	~~1,241~~	~~469~~	~~1,182~~	~~371~~

~~6. If the debtor is the only member of the household, actual annual expenditures by the debtor's family that exceed the applicable amount for a category, based on the debtor's available resources, shall be presumed unnecessary:~~

~~Debtor's Available Resources~~	~~Less than $5,000~~	~~$5,000 to $9,999~~	~~$10,000 to $14,999~~	~~$15,000 to $19,999~~	~~$20,000 to $29,999~~	~~$30,000 to $39,999~~	~~$40,000 to $49,999~~	~~$50,000 to $69,999~~	~~$70,000 and over~~
~~Food~~	~~2,547~~	~~2,537~~	~~2,388~~	~~2,671~~	~~2,989~~	~~3,535~~	~~4,136~~	~~4,750~~	~~6,672~~
~~Apparel~~	~~611~~	~~457~~	~~458~~	~~640~~	~~632~~	~~1,031~~	~~1,076~~	~~1,433~~	~~2,063~~
~~Health insurance~~	~~530~~	~~598~~	~~1,024~~	~~1,398~~	~~1,346~~	~~1,429~~	~~1,424~~	~~1,394~~	~~1,608~~
~~Medical services~~	~~293~~	~~186~~	~~253~~	~~412~~	~~460~~	~~439~~	~~523~~	~~555~~	~~1,043~~
~~Prescription drugs~~	~~186~~	~~175~~	~~325~~	~~410~~	~~340~~	~~387~~	~~306~~	~~344~~	~~392~~
~~Medical supplies~~	~~59~~	~~43~~	~~80~~	~~74~~	~~81~~	~~99~~	~~85~~	~~106~~	~~170~~
~~Personal care products and services~~	~~192~~	~~245~~	~~210~~	~~275~~	~~307~~	~~406~~	~~439~~	~~537~~	~~827~~

~~Education~~	~~1,780~~	~~914~~	~~393~~	~~390~~	~~563~~	~~406~~	~~268~~	~~540~~	~~1,314~~
~~Life and other personal insurance~~	~~58~~	~~45~~	~~89~~	~~110~~	~~275~~	~~142~~	~~159~~	~~219~~	~~333~~

~~7. If the debtor's household consists of two (2) persons, actual annual expenditures by the debtor's family that exceed the applicable amount for a category, based on the debtor's available resources, shall be presumed unnecessary:~~

~~Debtor's Available Resources~~	~~Less than $5,000~~	~~$5,000 to $9,999~~	~~$10,000 to $14,999~~	~~$15,000 to $19,999~~	~~$20,000 to $29,999~~	~~$30,000 to $39,999~~	~~$40,000 to $49,999~~	~~$50,000 to $69,999~~	~~$70,000 and over~~
~~Annual Expenditures~~									
~~Food~~	~~3,978~~	~~3,520~~	~~3,956~~	~~3,993~~	~~4,198~~	~~4,952~~	~~4,911~~	~~6,156~~	~~8,740~~
~~Apparel~~	~~976~~	~~897~~	~~742~~	~~617~~	~~991~~	~~1,049~~	~~1,123~~	~~1,337~~	~~2,845~~
~~Health insurance~~	~~1,072~~	~~993~~	~~1,224~~	~~1,514~~	~~2,528~~	~~2,389~~	~~2,442~~	~~2,759~~	~~2,711~~
~~Medical services~~	~~361~~	~~46~~	~~430~~	~~416~~	~~674~~	~~771~~	~~829~~	~~848~~	~~1,269~~
~~Prescription Drugs~~	~~236~~	~~342~~	~~558~~	~~483~~	~~665~~	~~635~~	~~745~~	~~704~~	~~727~~
~~Medical supplies~~	~~26~~	~~51~~	~~46~~	~~78~~	~~113~~	~~128~~	~~146~~	~~127~~	~~238~~
~~Personal care products and services~~	~~299~~	~~281~~	~~317~~	~~379~~	~~410~~	~~446~~	~~506~~	~~609~~	~~1,012~~
~~Education~~	~~298~~	~~1,021~~	~~675~~	~~467~~	~~412~~	~~482~~	~~466~~	~~551~~	~~1,300~~
~~Life and other personal insurance~~	~~128~~	~~72~~	~~115~~	~~165~~	~~200~~	~~250~~	~~253~~	~~345~~	~~618~~

~~8. If the debtor's household consists of three (3) persons, actual annual expenditures by the debtor's family that exceed the applicable amount for a category, based on the debtor's available resources, shall be presumed unnecessary:~~

~~Debtor's Available Resources~~	~~Less than $5,000~~	~~$5,000 to $9,999~~	~~$10,000 to $14,999~~	~~$15,000 to $19,999~~	~~$20,000 to $29,999~~	~~$30,000 to $39,999~~	~~$40,000 to $49,999~~	~~$50,000 to $69,999~~	~~$70,000 and over~~
~~Food~~	~~6,056~~	~~5,636~~	~~4,730~~	~~4,636~~	~~5,172~~	~~6,078~~	~~5,868~~	~~6,671~~	~~9,509~~
~~Apparel~~	~~1,128~~	~~2,296~~	~~1,280~~	~~1,179~~	~~1,402~~	~~1,895~~	~~1,238~~	~~1,979~~	~~2,631~~
~~Health insurance~~	~~1,080~~	~~560~~	~~374~~	~~553~~	~~1,159~~	~~1,627~~	~~1,839~~	~~2,199~~	~~2,711~~
~~Medical services~~	~~173~~	~~155~~	~~233~~	~~93~~	~~563~~	~~495~~	~~491~~	~~1,189~~	~~1,276~~
~~Prescription drugs~~	~~315~~	~~172~~	~~220~~	~~283~~	~~309~~	~~375~~	~~441~~	~~523~~	~~650~~
~~Medical supplies~~	~~82~~	~~46~~	~~23~~	~~39~~	~~77~~	~~93~~	~~100~~	~~91~~	~~206~~
~~Personal care products and services~~	~~411~~	~~448~~	~~304~~	~~339~~	~~426~~	~~583~~	~~520~~	~~580~~	~~1,052~~
~~Education~~	~~2,621~~	~~1,172~~	~~152~~	~~266~~	~~315~~	~~410~~	~~805~~	~~783~~	~~2,588~~
~~Life and other personal insurance~~	~~209~~	~~103~~	~~37~~	~~112~~	~~127~~	~~176~~	~~219~~	~~320~~	~~725~~

~~9. If the debtor's household consists of four (4) persons, actual annual expenditures by the debtor's family that exceed the applicable amount for a category, based on the debtor's available resources, shall be presumed unnecessary:~~

~~Debtor's Available Resources~~	~~Less than $10,000~~	~~$10,000 to $14,999~~	~~$15,000 to $19,999~~	~~$20,000 to $29,999~~	~~$30,000 to $39,999~~	~~$40,000 to $49,999~~	~~$50,000 to $69,999~~	~~$70,000 and over~~
~~Food~~	~~5,196~~	~~5,175~~	~~6,395~~	~~5,362~~	~~6,796~~	~~7,003~~	~~7,513~~	~~11,103~~
~~Apparel~~	~~2,749~~	~~1,255~~	~~2,364~~	~~1,547~~	~~1,616~~	~~1,665~~	~~1,935~~	~~3,094~~
~~Health insurance~~	~~578~~	~~299~~	~~614~~	~~746~~	~~1,367~~	~~1,515~~	~~1,901~~	~~2,585~~
~~Medical services~~	~~209~~	~~134~~	~~202~~	~~433~~	~~449~~	~~589~~	~~692~~	~~1,142~~
~~Prescription drugs~~	~~100~~	~~163~~	~~358~~	~~233~~	~~245~~	~~341~~	~~387~~	~~571~~
~~Medical supplies~~	~~37~~	~~78~~	~~10~~	~~49~~	~~108~~	~~99~~	~~103~~	~~179~~
~~Personal care products and services~~	~~407~~	~~280~~	~~255~~	~~457~~	~~442~~	~~529~~	~~681~~	~~1,054~~
~~Education~~	~~293~~	~~264~~	~~154~~	~~463~~	~~469~~	~~609~~	~~847~~	~~2,972~~
~~Life and other personal insurance~~	~~80~~	~~36~~	~~65~~	~~75~~	~~120~~	~~140~~	~~268~~	~~623~~

~~10. If the debtor's household consists of five (5) or more persons, actual annual expenditures by the debtor's family that exceed the applicable~~

~~amount for a category, based on the debtor's available resources, shall be presumed unnecessary:~~

~~Debtor's Available Resources~~	~~Less than $10,000~~	~~$10,000 to $14,999~~	~~$15,000 to $19,999~~	~~$20,000 to $29,999~~	~~$30,000 to $39,999~~	~~$40,000 to $49,999~~	~~$50,000 to $69,999~~	~~$70,000 and over~~
~~Food~~	~~6,161~~	~~6,009~~	~~6,880~~	~~7,143~~	~~7,716~~	~~7,232~~	~~8,518~~	~~11,702~~
~~Apparel~~	~~2,539~~	~~1,632~~	~~1,536~~	~~2,268~~	~~2,466~~	~~1,982~~	~~2,314~~	~~3,343~~
~~Health insurance~~	~~558~~	~~267~~	~~473~~	~~481~~	~~993~~	~~1,546~~	~~1,674~~	~~2,590~~
~~Medical services~~	~~490~~	~~222~~	~~153~~	~~366~~	~~399~~	~~607~~	~~711~~	~~1,160~~
~~Prescription drugs~~	~~299~~	~~126~~	~~190~~	~~228~~	~~303~~	~~348~~	~~366~~	~~598~~
~~Medical supplies~~	~~46~~	~~19~~	~~34~~	~~53~~	~~68~~	~~89~~	~~94~~	~~195~~
~~Personal care products and services~~	~~278~~	~~323~~	~~511~~	~~466~~	~~419~~	~~586~~	~~554~~	~~1,003~~
~~Education~~	~~411~~	~~161~~	~~185~~	~~374~~	~~480~~	~~665~~	~~575~~	~~2,652~~
~~Life and other personal insurance~~	~~102~~	~~41~~	~~49~~	~~58~~	~~149~~	~~215~~	~~233~~	~~581~~]

Section 5.(1) An administrative order issued by the authority to withhold disposable pay shall be served upon the debtor's employer personally or by mail. A notice of the issuance of the order shall be provided to the debtor by regular first class mail. The order shall require the withholding and delivery to the authority of not more than fifteen (15) percent of the debtor's disposable pay, except that a greater percentage may be deducted upon the written consent of the debtor.

(2) The order shall state the amount or percentage to be withheld and the amount of the debt, the statutory and regulatory basis therefore, and the time withholding is to begin.

(3) The order shall continue to operate until the debt is paid in full with interest accrued and accruing thereon at the prescribed rate in the promissory note or applicable law and collection costs that may be charged to the borrower under the promissory note or applicable law. The order shall have the same priority as provided to a judicially ordered garnishment prescribed in KRS 425.506.

(4) An employer who has been served with an administrative order for withholding of earnings shall answer the order within twenty (20) days, and shall provide a copy to the debtor the first time that withholding occurs and each time thereafter that a different amount is withheld. The employer shall be liable to the authority for a lawfully due amount which the employer fails to withhold from disposable pay due the debtor following receipt of the order, plus attorneys' fees, costs, and, in the discretion of a court of competent jurisdiction, punitive damages.

(5) A withholding under this section shall not be grounds for discharge from employment, refusal to employ**,** or disciplinary action against an employee subject to withholding under this section.

(6) The employer shall have no liability or further responsibility after properly, completely, and timely fulfilling the duties under this section.

Section 6.(1) Whenever this administrative regulation requires delivery of a notice, subpoena, or other communication by personal service, the service shall be made by:

(a) An officer authorized under KRS 454.140 to serve process; or

(b) A person over the age of eighteen (18) years of age, who shall prove service by affidavit or by the signature of the person being served.

(2) Receipt of a notice or other communication by the debtor shall be rebuttably presumed if the person to be served or another adult with apparent authority at the place of residence or employment last known to the authority signs a receipt or refuses to accept the notice or communication after identification and offer of delivery to the person so refusing.

(3) For an administrative order to withhold disposable pay served upon an employer, receipt shall provide a rebuttable presumption if:

(a) The person to whom the order is directed signs or refuses to sign a receipt; or

(b) His employee or agent with apparent authority signs or refuses to sign a receipt.

LISA PAYNE, Chair

APPROVED BY AGENCY: August 28, 2014

FILED WITH LRC: September 11, 2014 at 10 a.m.

CONTACT PERSON: Ms. Diana L. Barber, General Counsel, Kentucky Higher Education Assistance Authority, P.O. Box 798, Frankfort, Kentucky 40602-0798, phone (502) 696-7298, fax (502) 696-7293.

KENTUCKY HIGHER EDUCATION ASSISTANCE AUTHORITY
Division of Student and Administrative Services
(As Amended at ARRS, December 9, 2014)

11 KAR 4:080. Student aid applications.

RELATES TO: KRS 164.518, 164.744(2), 164.748(4), (7), (8), 164.753(3), (4), (6), 164.7535, 164.769, 164.780, 164.785, 164.7890, ***164.7894,*** 34 C.F.R. 654.1-654.5, 654.30-654.52, 20 U.S.C. 1070d-31 - 1070d-41

STATUTORY AUTHORITY: KRS 164.518(3), 164.746(6), 164.748(4), 164.753(3), (6), 164.7535, 164.769(5), (6)(f), ***164.7894(6),*** 34 C.F.R. 654.30, 654.41, 20 U.S.C. 1070d-37, 1070d-38

NECESSITY, FUNCTION, AND CONFORMITY: KRS 164.748(4) authorizes the Authority to promulgate administrative regulations pertaining to the awarding of grants, scholarships, and honorary scholarships as provided in KRS 164.740 to 164.7891. ***KRS 164.7894(6) requires the authority to promulgate administrative regulations as may be needed for the administration of the Kentucky Coal County College Completion Program.*** This administrative regulation designates and incorporates the applications to be utilized under the grant, scholarship, and work-study programs administered by KHEAA.

Section 1. Applications. In order to participate in a specified grant, scholarship, or work-study program administered by the Kentucky Higher Education Assistance Authority, the following application forms shall be completed in accordance with their instructions:

(1) For the KHEAA Grant Program as set forth in 11 KAR 5:130, the 2014-2015 Free Application for Federal Student Aid (FAFSA);

(2) For the KHEAA Work-Study Program as set forth in 11 KAR 6:010, the KHEAA Work-Study Program Student Application;

(3) For the Teacher Scholarship Program as set forth in 11 KAR 8:030, the Teacher Scholarship Application;

(4) For the Early Childhood Development Scholarship Program as set forth in 11 KAR 16:010:

(a) The 2014-2015 Free Application for Federal Student Aid

(FAFSA); and

(b) The Early Childhood Development Scholarship Application;

(5) For the Robert C. Byrd Honors Scholarship Program as set forth in 11 KAR 18:010:

(a) For high school and home school students, the Robert C. Byrd Honors Scholarship Program; and

(b) For GED recipients, the Robert C. Byrd Honors Scholarship Program GED Recipients;

(6) For the Go Higher Grant Program as set forth in 11 KAR 5:200;

(a) The 2014-2015 Free Application for Federal Student Aid (FAFSA); and

(b) The Go Higher Grant Program Application;[~~and~~]

(7) For the Coal County Scholarship Program for Pharmacy Students as set forth in 11 KAR 19:010, the Coal County Scholarship Program for Pharmacy Students Application; and

(8) For the Kentucky Coal County College Completion Scholarship Program as set forth in 11 KAR 20:020:

(a) The 2014-2015 Free Application for Federal Student Aid (FAFSA); and

(b) The Kentucky Coal County College Completion Scholarship Application.

Section 2. Incorporation by Reference. (1) The following material is incorporated by reference:

(a) The "Free Application for Federal Student Aid July 1, 2014 – June 30, 2015" (FAFSA), December 2013;

(b) The "KHEAA Work-Study Program Student Application", July 2001;

(c) The "Teacher Scholarship Application", June 2006;

(d) The "Early Childhood Development Scholarship Application", April 2006;

(e) The "Robert C. Byrd Honors Scholarship Program", June 2009;

(f) The "Robert C. Byrd Honors Scholarship Program-GED Recipients", June 2009;

(g) The "Go Higher Grant Program Application", January 2008;[~~and~~]

(h) The "Coal County Scholarship Program for Pharmacy Students Application", February 2011; and

(i) The "Kentucky Coal County College Completion Scholarship Application", October 2014.

(2) This material may be inspected, copied, or obtained, subject to applicable copyright law, at the Kentucky Higher Education Assistance Authority, 100 Airport Road, Frankfort, Kentucky 40601, Monday through Friday, 8 a.m. to 4:30 p.m. The material may also be obtained at www.kheaa.com.

LISA PAYNE, Chair

APPROVED BY AGENCY: September 30, 2014

FILED WITH LRC: October 10, 2014 at 1 p.m.

CONTACT PERSON: Ms. Diana L. Barber, General Counsel, Kentucky Higher Education Assistance Authority, P.O. Box 798, Frankfort, Kentucky 40602-0798, phone (502) 696-7298, fax (502) 696-7293.

KENTUCKY HIGHER EDUCATION ASSISTANCE AUTHORITY
Division of Student and Administrative Services
(As Amended at ARRS, December 9, 2014)

11 KAR 5:001. Definitions pertaining to 11 KAR Chapter 5.

RELATES TO: KRS 164.740-164.785

STATUTORY AUTHORITY: KRS 164.748(4), 164.753(4)

NECESSITY, FUNCTION, AND CONFORMITY: KRS 164.748(4) requires the authority to promulgate administrative regulations pertaining to the awarding of grants, scholarships, and honorary scholarships as provided in KRS 164.740 to 164.7891. KRS 164.753(4) requires the authority to promulgate administrative regulations pertaining to grants. This administrative regulation defines terms used in 11 KAR Chapter 5 pertaining to the Kentucky Tuition Grant Program and the College Access Program.

Section 1. Definitions. (1) "Academic term" means the fall or spring semester or their equivalence under a trimester or quarter system at a postsecondary education institution.

(2) "Academic year" means a period of time, usually eight (8) or nine (9) months, during which a full-time student would normally be expected to complete the equivalent of two (2) semesters, two (2) trimesters, three (3) quarters, 900 clock hours, twenty-four (24) semester hours, or thirty-six (36) quarter hours of instruction.

(3) "Authority" is defined by KRS 164.740(1).

(4) "College Access Program" or "CAP" means the program of student financial assistance grants authorized under KRS 164.7535 to assist financially needy part-time and full-time undergraduate students attending an educational institution.

(5) "Correspondence course" means a home study course that:

(a) Is provided by an educational institution under which the institution provides instructional materials, including examinations on the materials, to students who are not physically attending classes at the institution; and

(b) Meets the following requirements:

1. When a student completes a portion of the instructional materials, the student takes the examinations that relate to that portion of the materials, and returns the examinations to the institution for grading;

2. The institution provides instruction through the use of video cassettes or video discs in an academic year, unless the institution also delivers the instruction on the cassette or disc to students physically attending classes at an institution during the same academic year; and

3. If a course is part correspondence and part residential training, the course shall be considered to be a correspondence course[~~; and~~

~~(c) Does not include courses from the Kentucky Virtual Campus~~].

(6) "Educational expenses" means tuition and fees, books and supplies, room and board or reasonable living expenses, reasonable miscellaneous personal expenses, and reasonable transportation costs for the academic period of the grant application.

(7) "Educational institution" means a participating institution located in Kentucky which:

(a) Offers an eligible program of study;

(b) As a condition of enrollment as a regular student, requires that the person:

1. Have a certificate of graduation from a school providing secondary education, or the equivalent of a certificate; or

2.a. Be beyond the age of compulsory attendance in Kentucky; and

b. Have the ability to benefit from the training offered by the institution;[~~and~~]

(c) Either:

1. Has its headquarters or main campus in Kentucky; or

2. If based outside of Kentucky, offers no more than forty-nine (49) percent of the courses offered in Kentucky as online courses; and

(d)1. For purposes of the College Access Program, is a public or private participating institution; or

2. For purposes of the Kentucky Tuition Grant Program, is a private independent college or university, accredited by a regional accrediting association recognized by the United States Department of Education, that is a participating institution whose institutional programs are not comprised solely of sectarian instruction.

(8) "Eligible institution" is defined by KRS 164.740***(4)***[~~(3)~~].

(9) "Eligible noncitizen" means an individual who is:

(a) Either:

1. A U.S. national;

2. A U.S. permanent resident with an Alien Registration Receipt Card (1-151 or 1-551); or

3. A person with a Departure Record (I-94) from the U.S. Immigration and Naturalization Service showing any one (1) of the following designations:

a. "Refugee";

b. "Asylum granted";

c. "Indefinite parole" or "humanitarian parole"; or

d. "Cuban-Haitian entrant"; and

(b) Not in the United States on a:

1. F1 or F2 student visa;

2. J1 or J2 exchange visa; or

3. G series visa.

(10) "Eligible program of study" means an undergraduate program, of a least two (2) academic years**'** duration, offered by an educational institution which:

(a) For purposes of the KTG or CAP Grant Programs, leads to a degree; or

(b) For purposes of only the CAP Grant Program:

1. Leads to a certificate or diploma while attending a publicly operated vocational-technical institution; or

2. Is designated as an equivalent undergraduate program of study by the Council on Postsecondary Education.

(11) "Expected family contribution" means the amount that a student and his family are expected to contribute toward the cost of the student's education determined by applying the federal methodology established in 20 U.S.C. 1087kk through 1087vv to the information that the student and his family provided on the application.

(12) "Federal act" is defined by KRS 164.740***(8)***[~~(7)~~] and means 20 U.S.C. 1001 through 1146a.

(13) "Full-time student" means an enrolled student who is carrying a full-time academic workload:

(a) That may include any combination of courses, work, research, or special studies that the institution considers sufficient to classify the student as a full-time student, except that correspondence courses shall not be counted in determining the student's full-time status; and

(b) As determined by the institution under a standard applicable to all students enrolled in a particular educational program, except that for an undergraduate student, an institution's minimum standard shall equal or exceed one (1) of the following minimum requirements:

1. Twelve (12) semester hours or eighteen (18) quarter hours per academic term in an educational program using a semester, trimester, or quarter system;

2. Twenty-four (24) semester hours or thirty-six (36) quarter hours per academic year for an educational program using credit hours**,** but not using a semester, trimester, or quarter system, or the prorated equivalent for a program of less than one (1) academic year;

3. Twenty-four (24) clock hours per week for an educational program using clock hours;

4. In an educational program using both credit and clock hours, any combination of credit and clock hours if the sum of the following fractions is equal to or greater than one (1):

a. For a program using a semester, trimester, or quarter system, the number of credit hours per term divided by twelve (12) and the number of clock hours per week divided by twenty-four (24); or

b. For a program not using a semester, trimester, or quarter system, the number of semester or trimester hours per academic year divided by twenty-four (24)***[and]*** the number of quarter hours per academic year divided by thirty-six (36)**,** and the number of clock hours per week divided by twenty-four (24);

5. A series of courses or seminars that equals twelve (12) semester hours or twenty-four (24) quarter hours in a maximum of eighteen (18) weeks; or

6. The work portion of a cooperative education program in which the amount of work performed is equivalent to the academic workload of a full-time student.

(14) "Grant" is defined by KRS 164.740***(9)***[~~(8)~~].

(15) "Kentucky Tuition Grant" or "KTG" means the program of student financial assistance grants authorized by KRS 164.780 and 164.785 for residents of Kentucky who bear the major costs of attending an educational institution and who demonstrate financial need.

(16) "KHEAA grant" means an award of a student financial assistance grant under the College Access Program or the Kentucky Tuition Grant Program or a combination of the two (2).

(17) "KHEAA grant limit" means an aggregate limitation on KHEAA grant awards:

(a) That are made to an individual for all academic years of the eligible program of study in which the student receives a KHEAA grant (including any KHEAA grant limit previously used in a different eligible program of study or at a different educational institution); and

(b) That shall be:

1. Measured in terms of the applicable percentage of the maximum KHEAA grant that would have been disbursed for the academic year to a full-time student and not fully refunded;

2. Depleted each academic term by subtracting, from the applicable percentage, the percentage used for the academic term, derived by dividing the net amount of KHEAA grant disbursed for the academic term by the maximum KHEAA grant award for the academic year that would have been disbursed to a full-time student, using the then current maximum KHEAA grant; and

3. Based upon the following applicable percentages representing the aggregate limitation of KHEAA grant awards:

a. 200 percent for a student enrolled in a two (2) year eligible program of study; or

b. 400 percent for a student enrolled in a four (4) year eligible program of study.

(18) "KHEAA grant program officer" or "KGPO" means the official designated on the administrative agreement, pursuant to KRS 164.748(6), to serve as the educational institution's on-campus agent to certify all institutional transactions and activities with respect to the authority's grant programs.

(19) ***"On-ground course" means a course that meets the following criteria:***

(a) Instruction is delivered face-to-face, typically in a lecture-style format, in a setting in which the student and the instructor are in the same physical location on the educational institution's campus; and

(b) Is not an online course.

(20) "Online course" means a course ***for which*** any portion of the instruction***[for which]*** is transmitted electronically over telecommunication lines or the Internet.

(21)[~~(20)~~] "Overaward" means receipt of financial assistance from all sources in excess of a student's need determined in accordance with 11 KAR 5:130 through 5:145.

(22)[~~(21)~~][~~(20)~~] "Participating institution" is defined in KRS 164.740***(14)***[~~(13)~~].

(23)[~~(22)~~][~~(21)~~] "Part-time student" means an enrolled student who is carrying an academic workload:

(a) That may include any combination of courses, work, research, or special studies that the institution considers sufficient to classify the student as at least a half-time student, except that correspondence courses shall not be counted in determining the student's part-time status; and

(b) As determined by the institution under a standard applicable to all students enrolled in a particular educational program, except that for an undergraduate student, an institution's minimum standard shall equal or exceed one (1) of the following minimum requirements:

1. At least six (6) semester hours per semester;

2. Six (6) quarter hours per quarter; or

3. Half of the academic workload of a full-time student as determined by the educational institution.

(24)[~~(23)~~][~~(22)~~] "Pell Grant" means an award under the federal Pell Grant Program operated by the secretary under the provisions of 20 U.S.C. 1070a.

(25)[~~(24)~~][~~(23)~~] "Resident of Kentucky" or "resident" means a person who is determined by the participating institution to be a resident of Kentucky in accordance with the criteria established in 13 KAR 2:045.

(26)[~~(25)~~][~~(24)~~] "Total cost of education" means an amount determined for an academic year for each applicant by the following formula: normal tuition and fees charged by the institution chosen by the applicant, plus maximum board contract amount, plus minimum room contract amount.

LORI PAYNE, Chair
APPROVED BY AGENCY: August 28, 2014
FILED WITH LRC: September 11, 2014 at 10 a.m.
CONTACT PERSON: Ms. Diana L. Barber, General Counsel, Kentucky Higher Education Assistance Authority, P.O. Box 798, Frankfort, Kentucky 40602-0798, phone (502) 696-7298, fax (502) 696-7293.

KENTUCKY HIGHER EDUCATION ASSISTANCE AUTHORITY
Division of Student and Administrative Services
(As Amended at ARRS, December 9, 2014)

11 KAR 5:033. KTG student eligibility requirements.

RELATES TO: KRS 164.753(4), 164.780, 164.785
STATUTORY AUTHORITY: KRS 164.748(4), 164.785
NECESSITY, FUNCTION, AND CONFORMITY: KRS 164.785 establishes the Kentucky Tuition Grant Program. KRS 164.748(4) and 164.753(4) require the Kentucky Higher Education Assistance Authority to promulgate an administrative regulation to administer grant programs to provide financial assistance to students to attend Kentucky educational institutions. This administrative regulation establishes student eligibility requirements for the Kentucky tuition grant program.

Section 1. Eligibility of Students. In order to qualify for disbursement of a Kentucky tuition grant, a student shall:
(1) Be a resident of the Commonwealth of Kentucky;
(2) Be enrolled as a full-time student in an eligible program of study;
(3) Be enrolled at an educational institution and not have previously earned a first baccalaureate or professional degree;
(4) Be determined by the authority, in accordance with 11 KAR 5:130 and 5:140, to have established financial need for the KTG;
(5) Have remaining KHEAA grant limit;
(6) Not receive financial assistance in excess of need to meet educational expenses;
(7) Maintain satisfactory progress in an eligible program of study according to the published standards and practices of the educational institution at which the student is enrolled;
(8) Satisfy all financial obligations to the authority and to any educational institution. Ineligibility under this subsection may be waived for cause by the executive director of the authority, at the recommendation of a designated staff review committee, for cause;
(9) Be a citizen of the United States or an eligible noncitizen;
(10) Be receiving full-time credit at an educational institution in an eligible program of study and paying full-time tuition and fees to that institution, if the student is studying abroad or off-campus;[~~and~~]
(11) Be:
(a) Attending an eligible institution ***with the[~~whose~~]*** main campus or headquarters***[~~is~~]*** located in Kentucky; or
(b) Attending at least fifty (50) percent of courses on-ground ***in Kentucky*** if enrolled at an eligible institution ***with the[~~whose~~]*** main campus or headquarters***[~~is~~]*** not located in Kentucky; and
(12) Not be:
(a) In default on any loan under Title IV of the federal act, codified as 20 U.S.C. 1070 to 1099, unless eligibility has been reinstated;
(b) Liable for any amounts that exceed annual or aggregate limits on any loan under Title IV of the federal act, codified as 20 U.S.C. 1070 to 1099; and
(c) Liable for overpayment of any grant or loan under Title IV of the federal act, codified as 20 U.S.C. 1070 to 1099.

LISA PAYNE, Chair
APPROVED BY AGENCY: August 28, 2014
FILED WITH LRC: September 11, 2014 at 10 a.m.
CONTACT PERSON: Ms. Diana L. Barber, General Counsel, Kentucky Higher Education Assistance Authority, P.O. Box 798, Frankfort, Kentucky 40602-0798, phone (502) 696-7298, fax (502) 696-7293.

KENTUCKY HIGHER EDUCATION ASSISTANCE AUTHORITY
Division of Student and Administrative Services
(As Amended at ARRS, December 9, 2014)

11 KAR 5:034. CAP grant student eligibility.

RELATES TO: KRS 164.744(2), 164.753(4), 164.7535
STATUTORY AUTHORITY: KRS 164.748(4), 164.753(4)
NECESSITY, FUNCTION, AND CONFORMITY: KRS 164.748(4) requires the authority to promulgate administrative regulations pertaining to the awarding of grants, scholarships, and honorary scholarships as provided in KRS 164.740 to 164.7891. KRS 164.753(4) requires the authority to promulgate administrative regulations pertaining to grants. KRS 164.7535 authorizes the authority to provide grants to assist financially needy part-time and full-time undergraduate students to attend educational institutions in Kentucky. This administrative regulation establishes student eligibility requirements for the college access program.

Section 1. In order to qualify for disbursement of a college access program grant, a student shall:
(1) Be a resident of Kentucky;
(2) Be enrolled at an educational institution as at least a part-time student as determined by the educational institution, in an eligible program of ***study[~~student~~]*** and not have previously earned a first baccalaureate or professional degree;
(3) Demonstrate financial need in accordance with 11 KAR 5:130 and 11 KAR 5:145 for CAP grant assistance;
(4) Have remaining KHEAA grant limit;
(5) Not receive financial assistance in excess of need to meet educational expenses;
(6) Maintain satisfactory progress in an eligible program of ***study[~~student~~]*** according to the published standards and practices of the educational institution at which the student is enrolled;
(7) Satisfy all financial obligations to the authority under any program administered by the authority pursuant to ***KRS[~~KS~~]*** 164.740 to 164.7891 and to any educational institution, except that ineligibility for this reason may be waived by the executive director of the authority, at the recommendation of a designated staff review committee, for cause;
(8) Be a citizen of the United States or an eligible noncitizen;
(9) Be receiving at least part-time credit at an educational institution in an eligible program of study and paying at least part-time tuition and fees to that institution, if the student is studying abroad or off-campus;
(10) Have been eligible to receive a CAP Grant in the preceding year, if the student is enrolled in an equivalent undergraduate program of study, as established by the Authority in 11 KAR 15:090, Section 5;[~~and~~]
(11) Be:
(a) Attending an eligible institution ***with the[~~whose~~]*** main campus or headquarters***[~~is~~]*** located in Kentucky; or
(b) Attending at least fifty (50) percent of courses on-ground ***in Kentucky*** if enrolled at an eligible institution ***with the[~~whose~~]*** main campus or headquarters***[~~is~~]*** not located in Kentucky; and
(12) Not be:
(a) In default on any loan under Title IV of the federal act, codified as 20 U.S.C. 1070 to 1099, unless eligibility has been reinstated;
(b) Liable for any amounts that exceed annual or aggregate limits on any loan under Title IV of the federal act, codified as 20 U.S.C. 1070 to 1099; and
(c) Liable for overpayment of any grant or loan under Title IV of the federal act, codified as 20 U. S. C. 1070 to 1099.

LISA PAYNE, Chair
APPROVED BY AGENCY: August 28, 2014
FILED WITH LRC: September 11, 2014 at 10 a.m.
CONTACT PERSON: Ms. Diana L. Barber, General Counsel, Kentucky Higher Education Assistance Authority, P.O. Box 798, Frankfort, Kentucky 40602-0798, phone (502) 696-7298, fax (502) 696-7293.

KENTUCKY HIGHER EDUCATION ASSISTANCE AUTHORITY
Division of Student and Administrative Services
(As Amended at ARRS, December 9, 2014)

11 KAR 5:170. Refund and repayment policy.

RELATES TO: KRS 164.748(4), (8), (12), (14), 164.753(4)(a), 164.7535, 164.780, 164.785
STATUTORY AUTHORITY: KRS 164.748(4)
NECESSITY, FUNCTION, AND CONFORMITY: KRS 164.748(4) requires the authority to promulgate administrative regulations pertaining to the awarding of grants, scholarships, and honorary scholarships as provided in KRS 164.740 to ***164.7891[~~164.785~~]***. KRS 164.753(4) requires the authority to promulgate administrative regulations pertaining to grants. This administrative regulation establishes the apportionment of financial assistance refunds from institutions and repayment from students due to the KHEAA grant programs.

Section 1. (1) A student who fails to enroll, withdraws, is expelled from the institution, or otherwise fails to complete the program on or after his first day of class of the period of enrollment or changes enrollment status may be due a refund of monies paid to the institution on behalf of that student or may owe a repayment of cash disbursements made to the student for educational expenses.
(2) If the student received financial assistance administered by the authority, all or a portion of the refund and repayment shall be due to the authority for its financial assistance programs in accordance with Sections 2 and 3 of this administrative regulation.

Section 2. (1) The institution shall adopt and implement a fair and equitable refund and repayment policy for financial assistance administered by the authority which shall be:
(a) A clear and conspicuous written statement;
(b) Made available to a prospective student, prior to the earlier of the student's enrollment or the execution of the student's enrollment agreement, and to currently enrolled students;
(c) Consistently administered by the institution; and
(d) Made available to the authority upon request.
(2) The institution's refund and repayment policy for financial assistance administered by the authority may use the same methods and formulas for determining the amount of a refund or repayment as the institution uses for determining the return of federal financial assistance funds or the institution may adopt a separate and distinct policy that is based upon:
(a) The requirements of applicable state law; or
(b) The specific refund standards established by the institution's nationally recognized accrediting agency.
(3) The amount of the refund and repayment shall be determined in accordance with the educational institution's refund and repayment policy relative to financial assistance funds, except as provided in Section 3 of this administrative regulation.
(4) When the institution determines that a refund or repayment of financial assistance is due in accordance with its policy, the institution shall allocate to the financial assistance programs administered by the authority the refund and repayment in the following descending order of priority prior to allocating the refund to institutional or private sources of financial assistance:
(a) CAP Grant;
(b) KTG;
(c) Go Higher Grant;
(d) Teacher Scholarship;
(e)[~~(d)~~] Kentucky Educational Excellence Scholarship;
(f) Kentucky Coal County College Completion Scholarship;
(g)[~~(e)~~] National Guard Tuition Assistance; and
(h)[~~(f)~~] Early Childhood Development Scholarship.

Section 3. ***If[~~When~~]*** a KHEAA grant recipient officially or unofficially withdraws from or is expelled by an institution before the first day of classes of the award period, the award shall be deemed an overaward and a full refund or repayment of the KHEAA grant shall be required, notwithstanding any institutional policy to the contrary. If the institution is unable to document the student's last date of attendance, any KHEAA grant disbursement for that award period shall be subject to full refund and repayment. If, at any time, a KHEAA grant recipient's enrollment is terminated with no assessment of tuition and fees by the institution, then the full KHEAA grant shall be subject to cancellation, if not yet disbursed, or refund and repayment if the grant has already been disbursed.

Section 4. (1) The institution shall remit to the authority the amount of funds allocated from the refund amount to the financial assistance programs administered by the authority as soon as possible but no later than thirty (30) days after the end of the term in which the student ceased to be enrolled.
(2) Refunds by the institution and notification of student repayment due transmitted to the authority shall be accompanied by:
(a) The student's name and Social Security number;
(b) The reason for the refund or repayment;
(c) The date of enrollment status change;
(d) The semester and year; and
(e) The calculation used for determining the refund or repayment.

LISA PAYNE, Chair
APPROVED BY AGENCY: August 28, 2014
FILED WITH LRC: September 11, 2014 at 10 a.m.
CONTACT PERSON: Ms. Diana L. Barber, General Counsel, Kentucky Higher Education Assistance Authority, P.O. Box 798, Frankfort, Kentucky 40602-0798, phone (502) 696-7298, fax (502) 696-7293.

KENTUCKY HIGHER EDUCATION ASSISTANCE AUTHORITY
Division of Student and Administrative Services
(As Amended at ARRS, December 9, 2014)

11 KAR 8:030. Teacher scholarships.

RELATES TO: KRS 164.740, 164.744(2), 164.753(3), 164.769
STATUTORY AUTHORITY: KRS 164.748(4), 164.753(3), 164.769(5), (6)(f)
NECESSITY, FUNCTION, AND CONFORMITY: KRS 164.744(2) authorizes the authority to provide scholarships and KRS 164.753(3) requires the Kentucky Higher Education Assistance Authority to promulgate administrative regulations pertaining to standards for scholarship programs. KRS 164.769 establishes a teacher scholarship program and requires the Kentucky Higher Education Assistance Authority to establish the terms and conditions for the award, cancellation, and repayment of teacher scholarships, awarded under KRS 164.769 and under prior teacher scholarship programs administered by the Kentucky Higher Education Assistance Authority. This administrative regulation establishes selection criteria, disbursement procedures, cancellation of repayment procedures and repayment obligations related to scholarships provided under the program.

Section 1. Definitions. (1) "Authority" is defined in KRS 164.740(1).
(2) "Critical shortage area" is defined in KRS 164.769(2)(a).
(3) "Default" means the status of an obligation under this program that has entered repayment and upon which no payment has been made for a cumulative period of 180 days following the repayment begin date for the obligation.

(4) "Eligible program of study" is defined in KRS 164.769(2)(b).

(5) "Expected family contribution" is defined in KRS 164.769(2)(c).

(6) "Kentucky Teacher Internship Program" or "KTIP" means the one (1) year of supervision, assistance, and assessment that is:

(a) Required by KRS 161.030 and established in 16 KAR 7:010; and

(b) Also referenced as the beginning teacher internship.

(7) "Participating institution" is defined in KRS 164.769(2)(d).

(8) "Professional Teaching Certificate" means the document issued to:

(a) An individual upon successful completion of the beginning teacher internship; or

(b) An applicant for whom the testing and internship requirement is waived under KRS 161.030 based on preparation and successful completion of the assessments.

(9) "Public school" means the common schools of the Commonwealth providing preschool, elementary, middle school, or secondary instruction.

(10) "Qualified teaching service" is defined in KRS 164.769(2)(e).

(11) "Semester" is defined in KRS 164.769(2)(f).

(12) "Summer term" is defined in KRS 164.769(2)(g).

(13) "Teaching" means performing continuous classroom instruction that:

(a) Is:

1. Pursuant to a professional teaching certificate in a position for which regular teacher certification is a prerequisite; or

2. During participation in the Kentucky Teacher Internship Program (KTIP); and

(b) Shall not include substitute teaching.

Section 2. Eligibility of Renewal Applicants and Selection Process. (1) Applicants shall complete the Teacher Scholarship Application set forth in 11 KAR 4:080, Section 1(3), according to its instructions. The applicant shall ensure that the completed application and supporting data indicating the applicant's financial need are received by the authority on or before May 1, or the next regular business day if May 1 falls on a weekend or holiday preceding the academic year for which the award is requested.

(2) Eligibility of renewal applicants. A person who previously received a loan or scholarship pursuant to KRS 164.769 shall be eligible to apply for and be considered for a renewal teacher scholarship if, at the time of application and disbursement, the renewal applicant has made satisfactory progress toward completion of the eligible program of study in accordance with standards prescribed by the participating institution.

(3) After awards are made to all qualified renewal applicants, applicants shall be considered and teacher scholarships shall be awarded to recipients in the following order until funds are depleted:

(a) Initial applicants who meet the standards and requirements established by the Education Professional Standards Board pursuant to KRS 161.028 and have been unconditionally admitted to a teacher education program shall be ranked in ascending order by expected family contribution.

(b) Initial applicants who have not yet been admitted to a teacher education program but who meet the standards and requirements established by the Education Professional Standards Board pursuant to KRS 161.028 for admission to a teacher education program shall be ranked in ascending order by expected family contribution.

(c) Otherwise eligible initial applicants seeking admission to a teacher education program shall be ranked in ascending order by expected family contribution.

Section 3. Award Maximums. (1) The amount of a teacher scholarship award shall be calculated by determining the student's total cost of education minus expected family contribution and the amount of financial aid received or expected to be received during the academic period. The amount of financial aid received or expected to be received during the academic period shall not include any amounts available from any student loan or work-study programs.

(2) The maximum teacher scholarship award for a student classified as a junior, senior, post baccalaureate, or graduate shall be $1,250 for a summer session, $2,500 for a semester, and $5,000 for an academic year (exclusive of a summer session).

(3) The maximum teacher scholarship award for a student classified as a freshman or sophomore shall be $325 for a summer session, $625 for a semester, and $1,250 for an academic year (exclusive of a summer session).

(4) The maximum award to an eligible student enrolled less than full time in the last semester or summer term during which a baccalaureate, post baccalaureate, or master's degree will be completed shall be:

(a) $210 per credit hour if the student is enrolled during a regular semester; or

(b) $105 per credit hour if the student is enrolled in a summer term.

Section 4. Disbursements. (1) Disbursement of a teacher scholarship shall be made at the beginning of each semester or summer session and each disbursement shall be evidenced by a promissory note, prescribed by the authority, in which the scholarship recipient shall agree to repay the scholarship funds or render qualified teaching service in lieu thereof.

(2) The monies awarded under the Teacher Scholarship Program shall be transmitted directly to the participating institution on behalf of all students eligible to receive the scholarship by electronic funds transfer.

(3) The authority shall send to the participating institution a disbursement roster containing each recipient's name and Social Security number.

(4) The participating institution shall hold the funds solely for the benefit of the student eligible to receive the scholarship and the authority until the recipient has registered for classes for the period of enrollment for which the scholarship is intended.

(5) Upon the recipient's registration, the participating institution shall immediately credit the recipient's account and notify the recipient in writing that it has so credited that account, and deliver to the recipient any remaining scholarship proceeds.

(6) The participating institution shall indicate on the disbursement roster the date funds were either credited to the student's account or disbursed to the student, the name of a recipient for whom funds are being returned, the amount being returned, and the reason funds are being returned.

(7) If a recipient does not register for the period of enrollment for which the scholarship was awarded, or a registered student withdraws or is expelled prior to the first day of classes of the period of enrollment for which the scholarship is awarded, the school shall return the proceeds to the authority pursuant to Section 12 of this administrative regulation.

(8) The school shall retain a copy of the disbursement roster for its records and forward the original roster and any undisbursed scholarship funds to the authority not later than thirty (30) days following receipt of the roster and the funds.

(9)(a) If a recipient subsequently refuses to repay the scholarship on grounds that he was unaware of or did not receive delivery of the scholarship proceeds from the school, upon written request from the authority, the school shall promptly provide documentary evidence to the authority that the recipient received or had funds credited to his student account and was notified of this transaction.

(b) The school shall otherwise reimburse the authority for any amount of the scholarship that is unenforceable absent that documentary evidence.

(c) The obligation of the school to provide the documentary evidence specified in paragraph (a) of this subsection shall continue until the recipient's obligations for repayment of the scholarship is paid in full or otherwise discharged.

Section 5. Cancellation. (1) A recipient rendering qualified teaching service in a designated critical shortage area shall remain eligible for the critical shortage credit provided by KRS

164.769(6)(c) if:

(a) The authority determines that an area is no longer a critical shortage area; and

(b) The recipient continues to render qualified teaching service in the area.

(2)(a) If a recipient has received loans or scholarships from more than one (1) program that is administered by the authority, and requires a period of qualified teaching service for repayment or cancellation, the teaching requirements shall not be fulfilled concurrently.

(b) Unless the authority determines otherwise for cause, loans or scholarships from more than one (1) program shall be repaid or cancelled by qualified teaching service in the same order in which they were received.

(c) If a recipient has received a loan or scholarship pursuant to KRS***[~~156.611, 156.613,~~]*** 164.768, 164.769 or 164.770 during the same semester as receiving a scholarship pursuant to KRS 161.165, the loan or scholarship received pursuant to KRS***[~~156.611, 156.613,~~]*** 164.768, 164.769 or 164.770 shall be repaid or cancelled by qualified teaching service prior to the scholarship received pursuant to KRS 161.165.

(3) A recipient shall receive cancellation under this program for each semester during which service is provided as specified in KRS 164.769(6)(c) if the recipient:

(a) Has completed the program of study;

(b) Is providing qualified teaching service; and

(c) Is prohibited from participating in KTIP solely as a result of state budget limitations.

(4) Verification of qualified teaching service shall be submitted to the authority in writing, signed by the local school district superintendent or building principal.

Section 6. Repayment. (1) A recipient failing to complete the eligible program of study, attain certification after completion of the eligible program of study, or commence rendering qualified teaching service within the six (6) month period following completion of the eligible program of study shall immediately become liable to the authority to pay the sum of all promissory notes and accrued interest thereon, unless the authority grants a deferment for cause.

(2) The interest rate applicable to repayment of a teacher scholarship under this section shall be six (6) percent per annum beginning April 1, 2005. Prior to April 1, 2005, the interest rate shall be twelve (12) percent per annum.

(3) If a repayment obligation subsequently becomes eligible for service credit cancellation as a result of the recipient's provision of teaching service, refund of payments previously made shall not be given to the recipient.

Section 7. Default. (1) Upon default on a repayment obligation under this program, the recipient's account shall be transferred to the appropriate agency of the Commonwealth of Kentucky for collections and shall be subject to the collection charges and fees assessed by that agency.

(2) A recipient whose repayment obligation has defaulted and who subsequently begins either providing qualified teaching service in the Commonwealth of Kentucky or participating in KTIP shall be removed from default status.

Section 8. Disability Discharge. A conditional or permanent discharge of the repayment obligation required by this program shall be granted by the Authority upon submission by the recipient of the documentation required by this section. (1) Conditional discharge. A conditional discharge shall be granted for a maximum two (2) year period, subject to annual review by the Authority, upon the submission of one (1) of the following as proof of the recipient's qualifying disability***:[~~;~~]***

(a) A finding of permanent disability by the Social Security Administration; or

(b) A completed Teacher Scholarship Program Application for Discharge, which shall include a certification by the recipient's treating physician that the recipient is unable to work or earn money and that the condition is expected to persist indefinitely.

(2) Permanent discharge. At the expiration of the two (2) year Conditional Discharge period specified in subsection (1) of this section, the Authority shall grant a permanent discharge to a recipient under this program upon the submission by the recipient of current documentation verifying that the qualifying disability exists at the time the permanent discharge is granted.

Section 9. Notifications. A recipient shall notify the authority within thirty (30) days of:

(1) Change in enrollment status;

(2) Cessation of full-time enrollment in an eligible program of study;

(3) Employment in a qualified teaching service position; or

(4) Change of name or address.

Section 10. Repayment Schedule. Written notification of demand for repayment shall be sent by the authority to the scholarship recipient's last known address and shall be effective upon mailing. The authority may agree***[~~, in its sole discretion,~~]*** to accept repayment in installments in accordance with a schedule established by the authority. Payments shall first be applied to interest and then to principal on the earliest unpaid promissory note.

Section 11. Records. A participating institution shall maintain complete and accurate records pertaining to the eligibility, enrollment**,** and progress of each student receiving aid under this program and the disbursement of funds and institutional charges as may be necessary to audit the disposition of these funds. The institution's records shall be maintained for at least three (3) years after the student ceases to be enrolled at the institution.

Section 12. Refunds. (1) If a student fails to enroll, withdraws, is expelled from the institution, or otherwise fails to complete the program on or after the student's first day of class of the period of enrollment or changes enrollment status, the Authority may be due a refund of monies paid to the institution on behalf of that student or a repayment of cash disbursements made to the student for educational expenses.

(2) If the student received financial assistance administered by the authority, the refund and repayment shall be due to the authority for its financial assistance programs in accordance with this section.

(3) The institution shall adopt and implement a fair and equitable refund policy for financial assistance administered by the authority which shall be:

(a) A clear and conspicuous written statement;

(b) Made available to a prospective student, prior to the earlier of the student's enrollment or the execution of the student's enrollment agreement, and to currently enrolled students;

(c) Consistently administered by the institution; and

(d) Made available to the authority upon request.

(4) The institution's refund policy for financial assistance administered by the authority shall either:

(a) Use the same methods and formulas for determining the amount of a refund as the institution uses for determining the return of federal financial assistance funds; or

(b) Be a separate and distinct policy adopted by the institution that is based upon:

1. The requirements of applicable state law; or

2. The specific refund standards established by the institution's nationally-recognized accrediting agency.

(5) The amount of the refund shall be determined in accordance with the educational institution's refund policy relative to financial assistance funds, except as provided in subsection (7) of this section.

(6) If the institution determines that a refund of financial assistance is due in accordance with its policy, the institution shall allocate to the financial assistance programs administered by the authority the refund and repayment in the following descending order of priority prior to allocating the refund to institutional or private sources of financial assistance:

(a) CAP grant;

(b) KTG;
(c) Go Higher Grant;
(d) Teacher Scholarship;
(e)[~~(d)~~] Kentucky Educational Excellence Scholarship;
(f) Kentucky Coal County College Completion Scholarship;
(g)[~~(e)~~] National Guard tuition assistance; and
(h) Early Childhood Development Scholarship.

(7)(a) If a teacher scholarship recipient officially or unofficially withdraws from or is expelled by an institution before the first day of classes of the award period, the award shall be deemed an overaward and a full refund and repayment of the teacher scholarship shall be required, notwithstanding any institutional policy to the contrary.

(b) If the institution is unable to document the student's last date of attendance, any teacher scholarship disbursement for that award period shall be subject to full refund.

(c) If a teacher scholarship recipient's enrollment is terminated with no assessment of tuition and fees by the institution, the full teacher scholarship shall be subject to:

1. Cancellation, if not yet disbursed; or
2. Refund if the teacher scholarship has already been disbursed.

(8)(a) The institution shall remit to the authority the amount of funds allocated from the refund amount to the financial assistance programs administered by the authority as soon as possible but no later than thirty (30) days after the end of the term in which the student ceased to be enrolled.

(b) Refunds by the institution transmitted to the authority shall be accompanied by:

1. The student's name and Social Security number;
2. The reason for the refund;
3. The date of enrollment status change;
4. The semester and year; and
5. The calculation used for determining the refund.

Section 13. Information Dissemination and Recruitment. The authority shall disseminate information through high school principals, counselors, and school superintendents about this program to potential recipients. The participating institution shall provide assurances that program information will be disseminated to students enrolled at the institution. The participating institution shall actively recruit students from minority population groups for participation in this program.

Section 14. Incorporation by Reference. (1) " Teacher Scholarship Program Application for Discharge", November 2007, is incorporated by reference.

(2) This material may be inspected, copied, or obtained, subject to applicable copyright law, at the Kentucky Higher Education Assistance Authority, 100 Airport Road, Frankfort, Kentucky 40601, Monday through Friday, 8 a.m. to 4:30 p.m.

LISA PAYNE, Chair

APPROVED BY AGENCY: August 28, 2014

FILED WITH LRC: September 11, 2014 at 10 a.m.

CONTACT PERSON: Ms. Diana L. Barber, General Counsel, Kentucky Higher Education Assistance Authority, P.O. Box 798, Frankfort, Kentucky 40602-0798, phone (502) 696-7298, fax (502) 696-7293.

KENTUCKY HIGHER EDUCATION ASSISTANCE AUTHORITY
Division of Student and Administrative Services
(As Amended at ARRS, December 9, 2014)

11 KAR 15:060. Kentucky Educational Excellence Scholarship overpayment and refund and repayment procedure.

RELATES TO: KRS 164.7871-164.7885

STATUTORY AUTHORITY: KRS 164.748(4), 164.7885(7)

NECESSITY, FUNCTION, AND CONFORMITY: KRS 164.748(4) requires the authority to promulgate administrative regulations pertaining to the awarding of grants, scholarships, and honorary scholarships as provided in KRS 164.740 to ***164.7891[~~164.785~~]***. KRS 164.7885(7) authorizes the authority to promulgate administrative regulations for the administration of the Kentucky Educational Excellence Scholarship Program. This administrative regulation establishes the conditions and procedures for refund or repayment of Kentucky Educational Excellence Scholarship funds.

Section 1. (1) If a student who earned a Kentucky Educational Excellence Scholarship (KEES) or supplemental award, fails to enroll, withdraws, is expelled from the institution, or otherwise fails to complete the program on or after his first day of class of the period of enrollment or changes enrollment status, the student may be due a refund of monies paid to the institution on behalf of that student or may owe a repayment of cash disbursements made to the student for educational expenses.

(2) If the student received a Kentucky Educational Excellence Scholarship or supplemental award, all or a portion of the refund and repayment shall be due to the authority for its financial assistance programs in accordance with Sections 2 and 3 of this administrative regulation.

Section 2. (1) The institution shall adopt and implement a fair and equitable refund and repayment policy for financial assistance administered by the authority which shall be:

(a) A clear and conspicuous written statement;

(b) Made available to a prospective student, prior to the earlier of the student's enrollment or the execution of the student's enrollment agreement, and to currently-enrolled students;

(c) Consistently administered by the institution; and

(d) Made available to the authority upon request.

(2) The institution's refund and repayment policy for financial assistance administered by the authority may use the same methods and formulas for determining the amount of a refund or repayment as the institution uses for determining the return of federal financial assistance funds or the institution may adopt a separate and distinct policy that is based upon:

(a) The requirements of applicable state law; or

(b) The specific refund standards established by the institution's nationally-recognized accrediting agency.

(3) The amount of the refund and repayment shall be determined in accordance with the educational institution's refund and repayment policy relative to financial assistance funds, except as provided in Section 3 of this administrative regulation.

(4) When the institution determines that a refund or repayment of financial assistance is due in accordance with its policy, the institution shall allocate to the financial assistance programs administered by the authority the refund and repayment in the following descending order of priority prior to allocating the refund to institutional or private sources of financial assistance:

(a) CAP grant;
(b) KTG;
(c) Go Higher Grant;
(d) Teacher Scholarship;
(e)[~~(d)~~] Kentucky Educational Excellence Scholarship;
(f) Kentucky Coal County College Completion Scholarship;
(g)[~~(e)~~] National Guard tuition assistance; and
(h)[~~(f)~~] Early Childhood Development Scholarship;

Section 3. (1) ***If[~~When~~]*** a KEES recipient officially or unofficially withdraws from or is expelled by an institution before the first day of classes of the award period, the award shall be deemed an overaward and a full refund or repayment of the KEES award shall be required, notwithstanding any institutional policy to the contrary.

(2) If the institution is unable to document the student's last date of attendance, any KEES disbursement for that award period shall be subject to full refund and repayment.

(3) If, at any time, a KEES recipient's enrollment is terminated with no assessment of tuition and fees by the institution, then the full KEES award shall be subject to cancellation, if not yet disbursed, or refund and repayment if the grant has already been

disbursed.

Section 4. (1) If a student earned a Kentucky Educational Excellence Scholarship or supplemental award but did not earn the entire amount of award funds the participating institution applies to the student's account or disburses to the student for an academic term, the participating institution and the student shall be jointly and severally liable to repay to the authority the amount of the overpayment.

(2) If a student did not earn a Kentucky Educational Excellence Scholarship or supplemental award and the participating institution applies to that student's account or disburses to that student Kentucky Educational Excellence Scholarship or supplemental award funds for an academic term, the participating institution and the student shall be jointly and severally liable to repay to the authority the entire amount of Kentucky Educational Excellence Scholarship and supplemental award funds applied to that student's account and disbursed to that student.

Section 5. The institution shall remit to the authority the amount of funds allocated from the refund amount to the financial assistance programs administered by the authority as soon as possible but no later than thirty (30) days after the end of the term in which the student ceased to be enrolled.

Section 6. (1) If a refund is due from the participating institution or a repayment is due from a student, the participating institution shall transmit to the authority the refund and shall report:

(a) The student's name and Social Security number;

(b) The reason for the refund or repayment;

(c) The date of enrollment status change;

(d) The academic term and award period; and

(e) The calculation used for determining the refund or repayment.

(2) Failure of the institution to make restitution when required shall, without precluding other remedies, be***[deemed]*** cause for limitation, suspension, or termination of the participation of the institution in accordance with 11 KAR 4:020.

LISA PAYNE, Chair

APPROVED BY AGENCY: August 28, 2014

FILED WITH LRC: September 11, 2014 at 10 a.m.

CONTACT PERSON: Ms. Diana L. Barber, General Counsel, Kentucky Higher Education Assistance Authority, P.O. Box 798, Frankfort, Kentucky 40602-0798, phone (502) 696-7298, fax (502) 696-7293.

KENTUCKY HIGHER EDUCATION ASSISTANCE AUTHORITY
Division of Student and Administrative Services
(As Amended at ARRS, December 9, 2014)

11 KAR 15:090. Kentucky Educational Excellence Scholarship (KEES) program.

RELATES TO: KRS 154A.130(4), 164.7871, 164.7874, 164.7877, 164.7879, 164.7881, 164.7885, 164.7889

STATUTORY AUTHORITY: KRS 164.7874, 164.7877(3), 164.7879(1), (2), (3), 164.7881(4)(a), (c), (6)

NECESSITY, FUNCTION, AND CONFORMITY: KRS 164.7877(3) requires the Authority to administer the Kentucky Educational Excellence Scholarship (KEES) trust fund. KRS 164.7874(16) requires the Authority to determine the KEES curriculum's courses of study. KRS 164.7879(3)(d) requires the Authority to determine the eligibility of a noncertified, nonpublic high school graduate and of a GED recipient for a supplemental award. KRS 164.7874(3) requires the Authority to establish a table to convert an SAT score to an ACT score. KRS 164.7881(6) requires the Authority to establish a five (5) year postsecondary education program standard. KRS 164.7881(4)(a) requires the Authority to establish overall award levels for the program. KRS 164.7879(2)(c) requires the Authority to determine eligibility for children of parents who are in the military and who claim Kentucky as their home of record. KRS 164.7881(4)(c) requires the Authority to identify equivalent undergraduate programs of study. This administrative regulation establishes those requirements relating to the Kentucky Educational Excellence Scholarship (KEES) Program.

Section 1. Definitions. (1) "Academic term" means the fall or spring semester or their equivalence under a trimester or quarter system at a postsecondary education institution and ***does[shall]*** not include summer sessions.

(2) "Accredited out-of-state high school" means a high school that is:

(a) Located in a state other than Kentucky or in another country; and

(b) A member of an organization belonging to the Commission on International and Trans-Regional Accreditation.

(3) "ACT" means the test:

(a) Administered to a student for entrance to a Kentucky postsecondary education institution; and

(b) Owned by the ACT Corporation of Iowa City, Iowa.

(4) "Advanced placement" is defined by KRS 158.007(1).

(5) "Course" means the equivalent of one (1) credit as determined by KDE in 704 KAR 3:305.

(6) "Cumulative grade point average" means the total grade point average for a postsecondary education student as reported by the postsecondary education institution where the student is currently enrolled.

(7) "Department of Defense school" means a school operated by the U. S. Department of Defense for the purpose of providing a high school education to a child whose custodial parent or guardian is in active military or diplomatic service in a state other than Kentucky or in another country.

(8) "Dual credit" is defined in KRS 158.007(8).

(9) "Enrolled" means the status of a student who has completed the registration requirements, except for the payment of tuition and fees, at a participating postsecondary education institution that the student is attending.

(10)[(9)] "Free and Reduced Price Lunch" means the National School Lunch program established by the United States Department of Agriculture to provide subsidized meals to lower income students.

(11)[(10)] "GED" means a general educational development diploma awarded to a student.

(12)[(11)] "International baccalaureate" is defined by KRS 158.007(10).

(13)[(12)] "KDE" means the Kentucky Department of Education authorized and established pursuant to KRS 156.010.

(14)[(13)] "SAT" means the test:

(a) Administered to a student for entrance to a Kentucky postsecondary education institution; and

(b) Owned by the College Board.

Section 2. High School Grade Point Average Calculation and Reporting. (1) An eligible high school student's grade point average for an academic year shall be calculated using each letter grade awarded for all courses taken during an academic year. The grading scale cutoff scores used to determine the letter grade for each course shall be the same as those used to determine the letter grade for each course reported on the student's official high school transcript.

(2)(a) Except as provided in paragraphs[paragraph] (b) and (c) of this subsection, an eligible high school student's grade point average shall be calculated by:

1. Taking the number of units in a course multiplied by the course grade as expressed on a 4.0 point grading scale where 4.0 is an "A", 3.0 is a "B", 2.0 is a "C", 1.0 is a "D", and 0.0 is an "F";

2. Adding the total number of points accumulated for an academic year; and

3. Dividing the total number of points accumulated in subparagraph 2 of this paragraph by the total number of units for the academic year.

(b) For an eligible high school student taking an advanced placement or international baccalaureate course during the

academic year, the course grade assigned shall be calculated using a 5.0 point scale where 5.0 is an "A", 4.0 is a "B", 3.0 is a "C", 2.0 is a "D", and 1.0 is an "F".

(c) Beginning with the academic year 2015-2016, for an eligible high school student taking a dual credit course during the academic year, the course grade assigned shall be calculated using a 5.0 point scale where 5.0 is an "A", 4.0 is a "B", 3.0 is a "C", 2.0 is a "D", and 1.0 is an "F". This weighted scale shall not be applicable to a remedial course.

(3) The grade point average reported for an eligible high school student for each academic year shall include all information as set forth in KRS 164.7885(1) and be submitted to the authority in either an electronic or hard copy format.

(4) A high school student who participated in an educational high school foreign exchange program or the Congressional Page School that was approved by the student's local high school shall have the student's grade point average reported in accordance with KRS 164.7879(2)(b).

Section 3. High School Students of Custodial Parents or Guardians in Active Military Service. (1)(a) For purpose of determining eligibility under the provisions of KRS 164.7879(2)(c), a high school student shall establish that the custodial parent or guardian meets the requirements of KRS 164.7879(2)(c)1a and b and shall submit the ***["]***Home of Record Certification ***Form["]*** to the Authority.

(b) The Authority annually shall notify the eligible high school student and the custodial parent or guardian of the student's eligibility.

(2)(a) A high school student, determined to be eligible for the KEES program under the terms of KRS 164.7879(2)(c) and subsection (1)(a) of this section, shall be responsible for:

1. Requesting grade and curriculum information from the local school; and

2. Requesting that the local school submit the information to the Authority using the ***["]***Curriculum Certification***["]*** Form and the ***["]***Data Submission***["]*** Form.

(b) Upon receipt of curriculum and grade information from an accredited out-of-state high school or Department of Defense school for a student determined to be eligible for the KEES Program under this section, the authority shall:

1. Verify that the submitted curriculum meets the requirements of Section 4 of this administrative regulation;

2. Verify that the out-of-state high school or Department of Defense school is an accredited high school; and

3. Retain the ***["]***Curriculum Certification ***Form["]*** on file until the student's eligibility has expired.

Section 4. Postsecondary Student Eligibility and KEES Curriculum. (1) A Kentucky postsecondary student shall be eligible to receive a base scholarship award if the student:

(a) Has earned a base scholarship award in high school;

(b) Has completed the KEES curriculum as set forth in subsection (2) of this section;

(c) Has graduated from a Kentucky high school except as provided in Section 2(4) or 3 of this administrative regulation; and

(d) Is enrolled in a participating institution in an eligible program.

(2) Except as provided in subsection (4) of this section, the KEES curriculum shall consist of the curriculum standards established in 704 KAR 3:305**.**

(3) A student who graduates from high school at the end of the fall semester of his or her senior year and who meets the requirements of KRS 164.7874(7) shall be eligible to earn a KEES award for that year upon:

(a) Completion of no fewer than three (3) courses of study; and

(b) Satisfying the provisions of KRS 164.7879.

(4) Except as provided in subsection (5) of this section, a high school may substitute an integrated, applied, interdisciplinary**,** or higher level course for a required course or required academic and career interest standards-based learning experience if:

(a) The course provides the same or greater academic rigor and the course covers or exceeds the minimum required content areas established in 703 KAR 4:060; or

(b) The course is an honors course, cooperative education course, advanced placement course, international baccalaureate course, dual credit course, or a course taken at a postsecondary education institution.

(5) Beginning with the 2012-2013 academic year, only one (1) cooperative education course per academic year shall count for purposes of satisfying KEES curriculum requirements.

(6) A high school annually shall provide written documentation to a student on whether the student's schedule of coursework meets the requirements of the KEES curriculum.

Section 5. Eligible Postsecondary Education Programs. (1) An eligible program shall be a certificate or degree program offered by a participating institution and recognized by the Authority.

(2) An eligible program at an out-of-state participating institution shall be limited to those programs that qualify through the Academic Common Market administered by the Southern Regional Education Board except as provided in subsection (4) of this section.

(3) Pursuant to KRS 164.7881(6), the following academic programs at Kentucky postsecondary education institutions shall be approved as five (5) year baccalaureate degree programs:

(a) Landscape architecture (04.0601); and

(b) For students that graduated from high school not later than the 2004-2005 academic year, engineering if enrollment in the engineering program has been continuous (14.0101, 14201, 14.0301, 14401, 14501, 14.0701, 14.0801, 14.0901, 14.1001, 14.1201, 14.1301, 14.1401, 14.1701, 14.1801, 14.1901, 14.2101, 14.2301, 14.2401, 14.2801, 14.9999.01, 14.3501).

(4) Pursuant to KRS 164.7881(4)(c)1, an academic program shall be designated as an equivalent undergraduate program of study if the student in the program of study:

(a) Has not received eight (8) ***academic terms[~~semesters~~]*** of a KEES award;

(b) Is classified by an institution as a graduate or professional student and is enrolled in one (1) of the following academic programs:

1. Pharm. D;

2. The optometry or veterinary medicine programs at an institution which is a part of the Kentucky Contract Spaces Program; or

3. A program contained on the Equivalent Undergraduate Programs List; and

(c) Has not completed a baccalaureate degree.

Section 6. SAT Conversion Table. (1) Pursuant to KRS 164.7874(3), the following SAT to ACT Conversion Table shall be used to convert scores for SAT exams taken prior to the 2011-2012 academic year:

Table C-2
Concordance Between SAT I Recentered V+M Score and ACT Composite Score

SAT I V+M	ACT Composite	SAT I V+M	ACT Composite	SAT I V+M	ACT Composite	SAT I V+M	ACT Composite	SAT I V+M	ACT Composite
1600	35-36	1370	31	1140	25	910	19	680	14
1590	35	1360	31	1130	25	900	19	670	14
1580	35	1350	30	1120	24	890	18	660	14
1570	35	1340	30	1110	24	880	18	650	13

1560	35	1330	30	1100	24	870	18	640	13
1550	34	1320	30	1090	24	860	18	630	13
1540	34	1310	29	1080	23	850	17	620	13
1530	34	1300	29	1070	23	840	17	610	13
1520	34	1290	29	1060	23	830	17	600	13
1510	34	1280	29	1050	22	820	17	590	13
1500	33	1270	28	1040	22	810	17	580	12
1490	33	1260	28	1030	22	800	16	570	12
1480	33	1250	28	1020	22	790	16	560	12
1470	33	1240	28	1010	21	780	16	550	12
1460	33	1230	27	1000	21	770	16	540	12
1450	32	1220	27	990	21	760	16	530	12
1440	32	1210	27	980	21	750	15	520	12
1430	32	1200	26	970	20	740	15	510	11
1420	32	1190	26	960	20	730	15	500	11
1410	32	1180	26	950	20	720	15		
1400	31	1170	26	940	20	710	15		
1390	31	1160	25	930	19	700	14		
1380	31	1150	25	920	19	690	14		

This table can be used to relate SAT I V+M scores to ACT Composite scores.
The estimates are based on the test scores of 103,525 students from fourteen (14) universities and two (2) states who took both the ACT and the SAT I between October 1994 and December 1996. Because the ACT and the SAT I have different content, students' actual scores on the ACT could differ significantly from the concordance estimates in the table.
Source: ACT, Inc. Questions about the concordance study may be directed to ACT's Research Division (319/337-1471).
January 1998

(2) Pursuant to KRS 164.7874(3), the SAT to ACT Conversion Table included in this subsection shall be used to convert scores for SAT exams taken during or after the 2011-2012 academic year. Only the scores from the critical reasoning and mathematics sections of the SAT within a single exam administration shall be considered for KEES supplemental awards.

Table C-2
Concordance Between SAT I Re centered V+M Score and ACT Composite Score

SAT I V+M	ACT Composite	SAT CR+M	ACT Composite	SAT CR+M	ACT Composite	SAT CR+M	ACT Composite	SAT CR+M	ACT Composite
1600	36	1370	31	1140	25	910	19	680	14
1590	35	1360	31	1130	25	900	19	670	14
1580	35	1350	30	1120	24	890	18	660	13
1570	35	1340	30	1110	24	880	18	650	13
1560	35	1330	30	1100	24	870	18	640	13
1550	35	1320	29	1090	24	860	18	630	13
1540	35	1310	29	1080	23	850	17	620	13
1530	34	1300	29	1070	23	840	17	610	12
1520	34	1290	29	1060	23	830	17	600	12
1510	34	1280	28	1050	23	820	17	590	12
1500	34	1270	28	1040	22	810	16	580	12
1490	34	1260	28	1030	22	800	16	570	12
1480	33	1250	28	1020	22	790	16	560	12
1470	33	1240	27	1010	21	780	16	550	11
1460	33	1230	27	1000	21	770	16	540	11
1450	33	1220	27	990	21	760	15	530	11
1440	33	1210	27	980	21	750	15	520	11
1430	32	1200	26	970	20	740	15	510	11
1420	32	1190	26	960	20	730	15		
1410	32	1180	26	950	20	720	15		
1400	32	1170	26	940	20	710	14		
1390	31	1160	25	930	19	700	14		
1380	31	1150	25	920	19	690	14		

This table can be used to relate SAT CR+M scores to ACT Composite scores.
The estimates are based on the test scores of 300,437 students who took both the ACT and the SAT CR+M between September 2004 and June 2006. Because the ACT and the SAT CR+M have different content, students' actual scores on the ACT could differ significantly from the concordance estimates in the table.
Source: ACT, Inc. Questions about the concordance study may be directed to ACT's Research Division (319/337-1471).
June, 2008

Section 7. Criteria for Supplemental Award to Noncertified, Nonpublic High School Students and to GED Students. (1) A Kentucky resident who is a citizen, national, or permanent resident of the United States and who graduates from a nonpublic Kentucky high school not certified by the Kentucky Board of Education shall be eligible for a supplemental award if:

(a) The student is not a convicted felon;

(b) The date of the student's graduation is May 1999 or thereafter;

(c) The student takes the ACT or SAT and has at least a minimum score as established by KRS 164.7879(3); and

(d) The student enrolls in a participating institution within five (5) years after graduation from high school.

(2) A Kentucky resident who is a citizen, national, or permanent resident of the United States and who has not graduated from either a certified Kentucky high school or a nonpublic Kentucky high school that is not certified by the Kentucky Board of Education shall be eligible for a supplemental award if:

(a) The student is not a convicted felon;

(b) The student's 18th birthday occurs on or after January 1, 1999;

(c) The student takes and receives a GED diploma in Kentucky within five (5) years of attaining eighteen (18) years of age;

(d) The student takes the ACT or SAT and achieves a minimum score for eligibility as established by KRS 164.7879(3); and

(e) The student enrolls in a participating institution after July 1, 1999, and within five (5) years of receiving the GED diploma.

(3) A student who graduates from or attends an accredited out-of-state high school or Department of Defense school shall qualify for a supplemental award if:

(a) The parents meet the provisions of KRS 164.7879(2)(c)1a and b;

(b) The student takes the ACT or SAT and achieves a minimum score for eligibility as established by KRS 164.7879(3); and

(c) The student enrolls in a participating institution within five (5) years of graduating from or attending the accredited out-of-state high school or Department of Defense school.

(4) A student requesting a supplemental award under this section shall notify the participating institution where the student has or intends to enroll.

(5)(a) Residency shall be determined by a participating institution in accordance with 13 KAR 2:045.

(b) A participating institution shall determine a student's eligibility for a supplemental award under this section and shall notify the Authority of the student's eligibility.

Section 8. Supplemental Award. An eligible high school student who receives a supplemental award as a result of taking and receiving a GED within five (5) years of obtaining eighteen (18) years of age shall have a maximum of five (5) years eligibility beyond the date the GED is received.

Section 9. Supplemental Award for Achievement on Examinations. (1) Pursuant to KRS 164.7879(3)(c), a supplemental award shall be provided for achievement on Advanced Placement (AP) or International Baccalaureate (IB) examinations to an eligible high school student whose family was eligible for free and reduced price lunch during any year of high school.

(2)(a) An eligible high school shall report the status of each student as eligible or ineligible for free and reduced price lunch to the Authority on an annual basis.

(b) In determining a high school student's free and reduced price lunch eligibility, the high school shall utilize the income eligibility guidelines published each year by the United States Department of Agriculture, Food and Nutrition Service.

Section 10. Administrative Responsibilities and Expenses of Program. (1) The Authority annually shall determine the level of funding for expenses associated with the program and shall allocate funds from the "Wallace G. Wilkinson Kentucky Educational Excellence Scholarship Trust Fund" described in KRS 164.7877(1) and (3).

(2) The Authority annually shall adopt a budget proposal indicating the amount of funds available and a detailed listing of the expenditures necessary to operate the program.

(3) The Authority shall develop an allotment schedule for the release of the administrative funds.

Section 11. Incorporation by Reference. (1) The following material is incorporated by reference:

(a) "Home of Record Certification", June 2005;

(b) "Curriculum Certification", June 2005;

(c) "Data Submission", June 2005; and

(d) "Equivalent Undergraduate Programs List", June 2005.

(2) This material may be inspected, copied, or obtained, subject to applicable copyright law, at the Authority, 100 Airport Road, Frankfort, Kentucky 40601, Monday through Friday, 8 a.m. to 4:30 p.m.

LISA PAYNE, Chair

APPROVED BY AGENCY: September 30, 2014

FILED WITH LRC: October 10, 2014 at 1 p.m.

CONTACT PERSON: Ms. Diana L. Barber, General Counsel, Kentucky Higher Education Assistance Authority, P.O. Box 798, Frankfort, Kentucky 40602-0798, phone (502) 696-7298, fax (502) 696-7293.

KENTUCKY HIGHER EDUCATION ASSISTANCE AUTHORITY
Division of Student and Administrative Services
(As Amended at ARRS, December 9, 2014)

11 KAR 19:010. Coal County Scholarship Program for pharmacy students.

RELATES TO: KRS 164.740, 164.7890

STATUTORY AUTHORITY: KRS 164.744(2), 164.748(4), 164.753(3), 164.7890(9)

NECESSITY, FUNCTION, AND CONFORMITY: KRS 164.744(2) authorizes the authority to provide scholarships. KRS 164.748(4) and 164.753(3) require the authority to promulgate administrative regulations pertaining to the awarding of scholarships as provided in KRS 164.740 to 164.7891. KRS 164.7890(9) requires the authority to promulgate administrative regulations establishing the terms and conditions for the award, cancellation, and repayment of coal county scholarships for pharmacy students. This administrative regulation establishes the eligibility, application, and disbursement requirements for scholarships provided under the program.

Section 1. Definitions. (1) "Authority" is defined by KRS 164.740(1).

(2) "Coal-producing county" is defined by KRS 164.7890(2).

(3) "Default" means the status of an obligation under this program that has entered repayment and upon which no payment has been made for a cumulative period of 180 days following the repayment begin date for the obligation.

(4) "Eligible student" means any individual who satisfies the requirements set forth in KRS 164.7890(3) and (5).

(5) "Full-time practice" means providing services as a pharmacist in a coal-producing county for a minimum of 2,000 hours per calendar year.

(6) "Home County" means the county of permanent home residence of the student at the time in which the application is made, as determined by a preponderance of evidence such as a student's permanent address, parent's mailing address, parent's tax returns, location of high school of graduation and additional criteria as needed for a determination of residency status in accordance with 13 KAR 2:045.

(7) "Qualified service" is defined in KRS 164.7890(3)***(c)[(d)]***.

Section 2. Eligibility of Applicants and Selection Process. (1) Applicants shall complete the Coal County Scholarship Program

for Pharmacy Students Application as required by 11 KAR 4:080, Section 1(7), according to its instructions. The applicant shall ensure that the completed application is received by the authority on or before May 1, or the next regular business day if May 1 falls on a weekend or holiday, preceding the academic year for which the award is requested.

(2) Eligibility of renewal applicants. A person who previously received a loan or scholarship pursuant to KRS 164.7890 shall be eligible to apply for and be considered for a renewal coal county scholarship if, at the time of application and disbursement, the renewal applicant has made satisfactory progress toward completion of the eligible program of study in accordance with the standards prescribed by the participating institution.

(3) Recipients shall be selected from among eligible applicants in the following order:

(a) Renewal applicants whose home counties are coal-producing counties; and

(b) Initial applicants whose home counties are coal-producing counties[~~;~~

~~(c) Renewal applicants whose home counties are not coal-producing counties; and~~

~~(d) Initial applicants whose home counties are not coal-producing counties~~].

(4) If there are more applicants within a category listed in subsection (3) of this section than there are funds available, the applications in each category shall be ranked to receive available funds by date of receipt of application.

Section 3. Entrance Counseling. (1) Each participating institution shall conduct entrance counseling for each scholarship recipient prior to requesting scholarship funds from the Authority on the recipient's behalf.

(2) The counseling shall be provided through either in-person sessions or by electronic or written means with the recipient's acknowledgement of receipt thereof.

(3) The following topics shall be covered through the counseling:

(a) The recipient's obligation to repay the scholarship if the recipient fails to provide qualified service as required under the program;

(b) The consequences of defaulting on any repayment obligation imposed under this program;

(c) The recipient's obligation to repay the scholarship even if the recipient is not satisfied with the quality of education received, does not complete the program of study, or does not find employment in the appropriate field or service area after graduation; and

(d) The importance of contacting the authority to advise of any change with respect to the recipient's name, address, enrollment status, or other contact information.

Section 4. Disbursements. (1) Each disbursement of a coal county scholarship shall be evidenced by a promissory note, prescribed by the authority, in which the scholarship recipient shall agree to repay the scholarship funds or render qualified pharmacy service in lieu thereof.

(2) Within thirty (30) days following receipt by the authority of the original signed promissory note for the student awarded a coal county scholarship, the authority shall send to the institution a roster containing the recipient's name and Social Security number.

(3) The participating institution shall verify the student's full-time enrollment in a Pharm D. program and completion of entrance counseling on the roster and return it to the authority.

(4) Upon receipt of the institution's completed roster, the authority shall disburse funds to the institution on behalf of all eligible students to receive the scholarship by electronic funds transfer.

(5) Disbursement of a coal county scholarship shall be made at the beginning of each fall and spring term.

(6) The participating institution shall be responsible for proper delivery of the funds. Upon the receipt of funds, the participating institution shall immediately credit the recipient's account and notify the recipient in writing that it has so credited that account, and deliver to the recipient any remaining scholarship proceeds.

(7) The participating institution shall retain record of the date funds were either credited to the student's account or disbursed to the student, the name of a recipient for whom funds are being returned, the amount being returned, and the reason funds are being returned.

(8) If a recipient withdraws or is expelled prior to the first day of classes of the period of enrollment for which the scholarship is awarded, the institution shall return the proceeds to the authority.

(9)(a) If a recipient subsequently refuses to repay the scholarship on grounds that the student was unaware of or did not receive delivery of the scholarship proceeds from the school, upon written request from the authority, the institution shall promptly provide documentary evidence to the authority that the recipient received or had funds credited to the student's account and was notified of this transaction.

(b) The school shall otherwise reimburse the authority for any amount of the scholarship that is unenforceable absent that documentary evidence.

(c) The obligation of the school to provide the documentary evidence specified in paragraph (a) of this subsection shall continue until the recipient's obligations for repayment of the scholarship is paid in full or otherwise discharged.

Section 5. Refunds. (1) If a student fails to enroll, withdraws, is expelled from the institution, or otherwise fails to complete the program on or after the student's first day of class of the period of enrollment or changes enrollment status, the Authority shall be due a refund of monies paid to the institution on behalf of that student or a repayment of cash disbursements made to the student for educational expenses.

(2) If the student received financial assistance administered by the authority, the refund and repayment shall be due to the authority for its financial assistance programs in accordance with this section.

(3) The institution shall adopt and implement a fair and equitable refund policy for financial assistance administered by the authority which shall be:

(a) A clear and conspicuous written statement;

(b) Made available to a prospective student, prior to the earlier of the student's enrollment or the execution of the student's enrollment agreement, and to currently-enrolled students;

(c) Consistently administered by the institution; and

(d) Made available to the authority upon request.

(4) The institution's refund policy for financial assistance administered by the authority shall either:

(a) Use the same methods and formulas for determining the amount of a refund as the institution uses for determining the return of federal financial assistance funds; or

(b) Be a separate and distinct policy adopted by the institution that is based upon:

1. The requirements of applicable state law; or

2. The specific refund standards established by the institution's nationally-recognized accrediting agency.

(5) The amount of the refund shall be determined in accordance with the educational institution's refund policy relative to financial assistance funds, except as provided in subsection (7) of this section.

(6) If the institution determines that a refund of financial assistance is due in accordance with its policy, the institution shall allocate to the financial assistance programs administered by the authority the refund and repayment prior to allocating the refund to institutional or private sources of financial assistance.

(7)(a) If a coal county scholarship recipient officially or unofficially withdraws from or is expelled by an institution before the first day of classes of the award period, the award shall ***constitute[be deemed]*** an over award and a full refund and repayment of the coal county scholarship shall be required, notwithstanding any institutional policy to the contrary.

(b) If the institution is unable to document the student's last date of attendance, any coal county scholarship disbursement for that award period shall be subject to full refund.

(c) If a coal county scholarship recipient's enrollment is

terminated with no assessment of tuition and fees by the institution, the full coal county scholarship shall be subject to:

1. Cancellation, if not yet disbursed; or

2. Refund if the coal county scholarship has already been disbursed.

(8)(a) The institution shall remit to the authority the amount of funds allocated from the refund amount to the financial assistance programs administered by the authority as soon as possible but no later than thirty (30) days after the end of the term in which the student ceased to be enrolled.

(b) Refunds by the institution transmitted to the authority shall be accompanied by:

1. The student's name and Social Security Number;

2. The reason for the refund;

3. The date of enrollment status change; and

4. The semester and year.

(c) Failure of the institution to make restitution if required shall, without precluding other remedies, be***[deemed]*** cause for limitation, suspension, or termination of the participation of the institution in accordance with 11 KAR 4:020.

Section 6. Notification Requirements. (1) A scholarship recipient shall notify the authority in writing within thirty (30) days of:

(a) Cessation of full-time enrollment in a pharmacy program;

(b) Certification to practice pharmacy in the Commonwealth of Kentucky;

(c) Failure to obtain certification to practice pharmacy in the Commonwealth of Kentucky;

(d) Employment in a qualified service position;

(e) Cessation of employment in a qualified service position;

(f) Failure, within 180 days following certification to practice pharmacy in the Commonwealth of Kentucky, to obtain employment in full-time practice in a coal-producing county within the Commonwealth of Kentucky as a certified pharmacist for a majority of the calendar year; or

(g) Change of name, permanent home address**,** or place of employment.

(2) The school of pharmacy shall notify the authority in writing within thirty (30) days of learning that a Coal County Scholarship Program for Pharmacy Students award recipient ceases to be enrolled on a full-time basis in the school of pharmacy.

Section 7. Records. (1) A participating institution shall maintain complete and accurate records pertaining to the eligibility, enrollment**,** and progress of each student receiving aid under this program and the disbursement of funds and institutional charges necessary to audit the disposition of these funds.

(2) The institution's records shall be maintained for at least three (3) years after the student ceases to be enrolled at the institution.

LISA PAYNE, Chair

APPROVED BY AGENCY: September 30, 2014

FILED WITH LRC: October 10, 2014 at 1 p.m.

CONTACT PERSON: Ms. Diana L. Barber, General Counsel, Kentucky Higher Education Assistance Authority, P.O. Box 798, Frankfort, Kentucky 40602-0798, phone (502) 696-7298, fax (502) 696-7293.

KENTUCKY HIGHER EDUCATION ASSISTANCE AUTHORITY
Division of Student and Administrative Services
(As Amended at ARRS, December 9, 2014)

11 KAR 20:001. Definitions for 11 KAR Chapter 20.

RELATES TO: KRS 164.7894

STATUTORY AUTHORITY: KRS 164.744(2),***[~~164.748(4), 164.753(3),~~]*** 164.7894

NECESSITY, FUNCTION, AND CONFORMITY: KRS 164.744(2) authorizes the authority to provide scholarships.***[~~KRS 164.748(4) and 164.753(3) require the authority to promulgate administrative regulations pertaining to the awarding of scholarships as provided in KRS 164.740 to 164.7894.~~]*** KRS 164.7894(6) requires the authority to promulgate administrative regulations as may be needed for the administration of the program. This administrative regulation defines terms used in 11 KAR Chapter 20 pertaining to the Kentucky Coal County College Completion Program.

Section 1. Definitions. (1) "Academic term" means the fall or spring semester at a postsecondary institution and ***does[~~shall~~]*** not include summer sessions.

(2) "Academic year" means a period of time that begins July 1 of a calendar year and ends June 30 of the next succeeding calendar year.

(3) "Authority" is defined by KRS 164.740(1).

(4) "Census date" means the date set by the institution that marks the end of the add/drop period.

(5) "District" is defined by KRS 164.7894(2)(a).

(6) "Full-time" means enrollment in a postsecondary program of study that meets the full-time requirements of the participating or nonparticipating institution in which the student is enrolled, typically consisting of a minimum of twelve (12) credit hours per semester.

(7) "Half-time" means enrollment in a postsecondary program of study that amounts to at least one-half (1/2) the workload required for full-time enrollment, as determined by the participating or nonparticipating institution, typically consisting of a minimum of six (6) credit hours per semester.

(8) "High school" is defined by KRS 164.7894(2)(b).

(9) "Kentucky Coal County College Completion scholarship" or "KCCCC scholarship" is defined by KRS 164.7894(2)(c).

(10) "Kentucky Coal County College Completion student services grant" or "KCCCC student services grant" is defined by KRS 164.7894(2)(d).

(11) "Nonparticipating institution" is defined by KRS 164.7894(5).

(12) "Participating institution" is defined by KRS 164.7894(3).

(13) "Tuition" is defined by KRS 164.7894(2)(e).

LISA PAYNE, Chair

APPROVED BY AGENCY: September 30, 2014

FILED WITH LRC: October 10, 2014 at 1 p.m.

CONTACT PERSON: Ms. Diana L. Barber, General Counsel, Kentucky Higher Education Assistance Authority, P.O. Box 798, Frankfort, Kentucky 40602-0798, phone (502) 696-7298, fax (502) 696-7293.

KENTUCKY HIGHER EDUCATION ASSISTANCE AUTHORITY
Division of Student and Administrative Services
(As Amended at ARRS, December 9, 2014)

11 KAR 20:010. Student eligibility requirements.

RELATES TO: KRS 164.7894

STATUTORY AUTHORITY: KRS 164.744(2),***[~~164.748(4), 164.753(3),~~]*** 164.7894

NECESSITY, FUNCTION, AND CONFORMITY: KRS 164.744(2) authorizes the authority to provide scholarships.***[~~KRS 164.748(4) and 164.753(3) require the authority to promulgate administrative regulations pertaining to the awarding of scholarships as provided in KRS 164.740 to 164.7894.~~]*** KRS 164.7894(6) requires the authority to promulgate administrative regulations as may be needed for the administration of the program. This administrative regulation ***establishes[~~sets forth~~]*** the student eligibility requirements under this program.

Section 1. Eligibility of Students. In order to qualify for disbursement of a Kentucky Coal County College Completion Program scholarship, a student shall:

(1) ***Comply with KRS 164.7894(7);***

(2) Have remaining KCCCC scholarship limit; and

(3) Not have earned a first baccalaureate degree.

Section 2. Waiver of Default.

(1) If a student is in default, the authority may grant a waiver for cause pursuant to KRS 164.7894(7).

(2) A student may appeal a denial of the award in accordance with 11 KAR 4:030[~~Be considered a permanent resident of the district for at least one (1) year immediately preceding July 1 of the academic year in which the scholarship is made;~~

[~~(2) Be a United States citizen;~~

[~~(3) Be a Kentucky resident as determined by the institution in accordance with criteria established by the Council on Postsecondary Education for the purposes of admission and tuition assessment;~~

[~~(4) Complete and submit the Free Application for Federal Student Aid for the academic year in which the award is made;~~

[~~(5) Have earned at least sixty (60) credit hours or the equivalent of completed coursework toward a bachelor's degree;~~

[~~(6) Be enrolled at least half-time at a participating institution, or a nonparticipating institution in accordance with KRS 164.7894(8), in upper division courses in a program of study that leads to a bachelor's degree;~~

[~~(7) Be in good academic standing in accordance with the policy of the institution;~~

[~~(8) Have remaining KCCCC scholarship limit;~~

[~~(9) Not have earned a first baccalaureate degree; and~~

[~~(10) Not be in default on any obligation to the authority under any program administered by the authority under KRS 164.740 to 164.785, except that ineligibility for this reason may be waived by the authority for cause]~~.

LISA PAYNE, Chair

APPROVED BY AGENCY: September 30, 2014

FILED WITH LRC: October 10, 2014 at 1 p.m.

CONTACT PERSON: Ms. Diana L. Barber, General Counsel, Kentucky Higher Education Assistance Authority, P.O. Box 798, Frankfort, Kentucky 40602-0798, phone (502) 696-7298, fax (502) 696-7293.

KENTUCKY HIGHER EDUCATION ASSISTANCE AUTHORITY
Division of Student and Administrative Services
(As Amended at ARRS, December 9, 2014)

11 KAR 20:020. Application and certification.

RELATES TO: KRS 164.7894

STATUTORY AUTHORITY: KRS 164.744(2),***[~~164.748(4), 164.753(3),~~]*** 164.7894

NECESSITY, FUNCTION, AND CONFORMITY: KRS 164.744(2) authorizes the authority to provide scholarships.***[~~KRS 164.748(4) and 164.753(3) require the authority to promulgate administrative regulations pertaining to the awarding of scholarships as provided in KRS 164.740 to 164.7894.~~]*** KRS 164.7894(6) requires the authority to promulgate administrative regulations as may be needed for the administration of the program. This administrative regulation establishes the ***student*** application ***and school certification*** procedures ***to be followed[~~for a student to follow~~]*** in applying for an award under the Kentucky Coal County College Completion Scholarship Program.

Section 1. Application. (1) In order for an eligible student to be considered for an award under this program, the student shall complete:

(a) The Kentucky Coal County College Completion Scholarship Application ***online as set forth[~~incorporated by reference~~]*** in 11 KAR 4:080***, Section 1(8)(b), from the KHEAA Web site, http//www.kheaa.com/***; and

(b) The Free Application for Federal Student Aid (FAFSA) as set forth in 11 KAR 4:080, Section ***1(8)(a)[2]***.

(2) The application period for this program shall be January ***1[~~1st~~]*** through May ***1[~~1st~~]*** preceding the academic year for which the award is requested.

Section 2. Certification. (1) For each applicant for an award under this program, the institution shall certify to the authority:

(a) The number of credit hours the applicant has successfully completed toward bachelor's degree completion at or prior to the end of the spring semester of the academic year preceding the application award year;

(b) The applicant's status as a permanent resident of a coal-producing county; and

(c) If the applicant is a permanent resident of a coal-producing county, the name of the county of permanent residence.

(2) The certification shall be completed and submitted to the authority no later than ***June 30[~~July 1st~~]*** preceding the academic year for which the certification is applicable.

LISA PAYNE, Chair

APPROVED BY AGENCY: September 30, 2014

FILED WITH LRC: October 10, 2014 at 1 p.m.

CONTACT PERSON: Ms. Diana L. Barber, General Counsel, Kentucky Higher Education Assistance Authority, P.O. Box 798, Frankfort, Kentucky 40602-0798, phone (502) 696-7298, fax (502) 696-7293.

KENTUCKY HIGHER EDUCATION ASSISTANCE AUTHORITY
Division of Student and Administrative Services
(As Amended at ARRS, December 9, 2014)

11 KAR 20:030. Award determination procedure.

RELATES TO: KRS 164.7894

STATUTORY AUTHORITY: KRS 164.744(2),***[~~164.748(4), 164.753(3),~~]*** 164.7894

NECESSITY, FUNCTION, AND CONFORMITY: KRS 164.744(2) authorizes the authority to provide scholarships.***[~~KRS 164.748(4) and 164.753(3) require the authority to promulgate administrative regulations pertaining to the awarding of scholarships as provided in KRS 164.740 to 164.7894.~~]*** KRS 164.7894(6) requires the authority to promulgate administrative regulations as may be needed for the administration of the program. This administrative regulation establishes the***[~~school certification and~~]*** awarding procedures applicable to the Kentucky Coal County College Completion Scholarship Program.

Section 1. Awarding. (1) A person who received a scholarship pursuant to KRS 164.7894 in the spring academic term immediately preceding the award year shall be eligible to apply for and be considered a renewal applicant if the applicant applies by the deadline set forth in 11 KAR 20:020.

(2) Scholarships shall be awarded to eligible certified applicants chronologically based on FAFSA completion date in the following order:

(a) Renewal applicants; ***and***

(b) New applicants.

(3) The maximum scholarship award amount for full-time ***and less than full-time*** enrollment shall be calculated as set forth in KRS 164.7894(9). ***An eligible student enrolled full-time in twelve (12) or more credit hours shall be entitled to the maximum award.***

Section 2. Reduction for Less than Full-Time Study. (1) If an eligible student is enrolled less than full-time for an academic term, the maximum award amount to which the student is entitled shall be as follows:

(a) Fifty (50) percent if enrolled for six (6) ***credit*** hours;

(b) Fifty-eight (58) percent if enrolled for seven (7) ***credit*** hours;

(c) Sixty-seven (67) percent if enrolled for eight (8) ***credit*** hours;

(d) Seventy-five (75) percent if enrolled for nine (9) ***credit*** hours;

(e) Eighty-three (83) percent if enrolled for ten (10) ***credit***

hours; ***and***

(f) Ninety-two (92) percent if enrolled for eleven (11) ***credit*** hours***[; and***

(g) 100 percent if enrolled for twelve (12) hours or more].

(2) A participating or nonparticipating institution shall determine full-time and less than full-time enrollment status for purposes of ***this administrative regulation[subsection (1) of this section]*** in the same manner as the institution uses to determine enrollment status for Pell Grant eligibility ***based upon the number of credit hours in which an eligible student is enrolled and in accordance with 34 C.F.R. 668.2***.

LISA PAYNE, Chair

APPROVED BY AGENCY: September 30, 2014

FILED WITH LRC: October 10, 2014 t 1 p.m.

CONTACT PERSON: Ms. Diana L. Barber, General Counsel, Kentucky Higher Education Assistance Authority, P.O. Box 798, Frankfort, Kentucky 40602-0798, phone (502) 696-7298, fax (502) 696-7293.

KENTUCKY HIGHER EDUCATION ASSISTANCE AUTHORITY
Division of Student and Administrative Services
(As Amended at ARRS, December 9, 2014)

11 KAR 20:040. Disbursement.

RELATES TO: KRS 164.7894

STATUTORY AUTHORITY: KRS 164.744(2),***[164.748(4), 164.753(3),]*** 164.7894

NECESSITY, FUNCTION, AND CONFORMITY: KRS 164.744(2) authorizes the authority to provide scholarships.***[KRS 164.748(4) and 164.753(3) require the authority to promulgate administrative regulations pertaining to the awarding of scholarships as provided in KRS 164.740 to 164.7894.]*** KRS 164.7894(6) requires the authority to promulgate administrative regulations as may be needed for the administration of the program. This administrative regulation establishes the disbursement procedures for awards under the Kentucky Coal County College Completion Scholarship Program.

Section 1. Eligibility Verification. Once the census date for each academic term has passed, the institution shall verify the eligibility of ***each student[students]*** and submit to the authority a complete and accurate eligibility verification record that shall include the following:

(1) The student's enrollment status;

(2) The number of credit hours in which the student is enrolled for the academic term; and

(3) For a nonparticipating institution, confirmation of the student's enrollment in an approved bachelor's degree program of study.

Section 2. Disbursement and Delivery of Funds. (1) The authority shall disburse up to one-half (1/2) of the scholarship awarded for the academic year during each academic term.

(2) Within thirty (30) days following receipt of the eligibility verification record, KCCCC scholarship funds shall be disbursed by the authority to the institution for subsequent delivery to the eligible student or application of the funds to the account of the eligible student.

Section 3. (1) The educational institution shall:

(a) Be responsible for proper disbursement of scholarship funds to ***each eligible student[the eligible students]*** during the academic term for which ***each award is[the awards are]*** intended;

(b) Not make scholarship funds available to the recipient nor apply those funds to the recipient's account after the end of the academic term for which the funds are received by the institution;

(c) Be liable for disbursement to the wrong individual or to an ineligible student, or for untimely disbursement pursuant to this section; and

(d) Make restitution to the authority of any amount improperly disbursed.

(2) Failure of the institution to make restitution when required shall, without precluding other remedies, be***[deemed]*** cause for limitation, suspension, or termination of the participation of the institution in accordance with 11 KAR 4:020.

LISA PAYNE, Chair

APPROVED: September 30, 2014

FILED WITH LRC: October 10, 2014 at 1 p.m.

CONTACT PERSON: Ms. Diana L. Barber, General Counsel, Kentucky Higher Education Assistance Authority, P.O. Box 798, Frankfort, Kentucky 40602-0798, phone (502) 696-7298, fax (502) 696-7293.

KENTUCKY HIGHER EDUCATION ASSISTANCE AUTHORITY
Division of Student and Administrative Services
(As Amended at ARRS, December 9, 2014)

11 KAR 20:050. Refunds and repayment.

RELATES TO: KRS 164.7894

STATUTORY AUTHORITY: KRS 164.744(2),***[164.748(4), 164.753(3),]*** 164.7894

NECESSITY, FUNCTION, AND CONFORMITY: KRS 164.744(2) authorizes the authority to provide scholarships.***[KRS 164.748(4) and 164.753(3) require the authority to promulgate administrative regulations pertaining to the awarding of scholarships as provided in KRS 164.740 to 164.7894.]*** KRS 164.7894(6) requires the authority to promulgate administrative regulations as may be needed for the administration of the program. This administrative regulation establishes the apportionment of financial assistance refunds from institutions and repayment from students due to the Kentucky Coal County College Completion Scholarship Program.

Section 1. (1) A student who fails to enroll, withdraws, is expelled from the institution, or otherwise fails to complete the program on or after his or her first day of class of the period of enrollment or changes enrollment status may be due a refund of monies paid to the institution on behalf of that student or may owe a repayment of cash disbursements made to the student for educational expenses.

(2) If the student received financial assistance administered by the authority, all or a portion of the refund and repayment shall be due to the authority for its financial assistance programs in accordance with Sections 2 and 3 of this administrative regulation.

Section 2. (1) The institution shall adopt and implement a fair and equitable refund and repayment policy for financial assistance administered by the authority which shall be:

(a) A clear and conspicuous written statement;

(b) Made available to a prospective student, prior to the earlier of the student's enrollment or the execution of the student's enrollment agreement, and to currently enrolled students;

(c) Consistently administered by the institution; and

(d) Made available to the authority upon request.

(2) The institution's refund and repayment policy for financial assistance administered by the authority may use the same methods and formulas for determining the amount of a refund or repayment as the institution uses for determining the return of federal financial assistance funds or the institution may adopt a separate and distinct policy that is based upon:

(a) The requirements of applicable state law; or

(b) The specific refund standards established by the institution's nationally recognized accrediting agency.

(3) The amount of the refund and repayment shall be determined in accordance with the educational institution's refund and repayment policy relative to financial assistance funds, except as provided in Section 3 of this administrative regulation.

(4) When the institution determines that a refund or repayment of financial assistance is due in accordance with its policy, the institution shall allocate to the financial assistance programs

administered by the authority the refund and repayment in the following descending order of priority prior to allocating the refund to institutional or private sources of financial assistance:

(a) CAP Grant;
(b) KTG;
(c) Go Higher Grant;
(d) Teacher Scholarship;
(e) Kentucky Educational Excellence Scholarship;
(f) Kentucky Coal County College Completion Scholarship;
(g) National Guard Tuition Assistance; and
(h) Early Childhood Development Scholarship.

Section 3. ***If***[~~When~~] a scholarship recipient officially or unofficially withdraws from or is expelled by an institution before the first day of classes of the award period, the award shall ***constitute***[~~be deemed~~] an overaward and a full refund or repayment of the scholarship shall be required, notwithstanding any institutional policy to the contrary. If the institution is unable to document the student's last date of attendance, any scholarship disbursement for that award period shall be subject to full refund and repayment. If, at any time, a scholarship recipient's enrollment is terminated with no assessment of tuition and fees by the institution, then the full scholarship shall be subject to cancellation, if not yet disbursed, or refund and repayment if the scholarship has already been disbursed.

Section 4. (1) The institution shall remit to the authority the amount of funds allocated from the refund amount to the financial assistance programs administered by the authority as soon as possible but no later than thirty (30) days after the end of the term in which the student ceased to be enrolled.

(2) Refunds by the institution and notification of student repayment due transmitted to the authority shall be accompanied by:

(a) The student's name and Social Security number;
(b) The reason for the refund or repayment;
(c) The date of enrollment status change;
(d) The semester and year; and
(e) The calculation used for determining the refund or repayment.

LISA PAYNE, Chair
APPROVED BY AGENCY: September 30, 2014
FILED WITH LRC: October 10, 2014 at 1 p.m.
CONTACT PERSON: Ms. Diana L. Barber, General Counsel, Kentucky Higher Education Assistance Authority, P.O. Box 798, Frankfort, Kentucky 40602-0798, phone (502) 696-7298, fax (502) 696-7293.

KENTUCKY HIGHER EDUCATION ASSISTANCE AUTHORITY
Division of Student and Administrative Services
(As Amended at ARRS, December 9, 2014)

11 KAR 20:060. Records and reports.

RELATES TO: KRS 164.7894
STATUTORY AUTHORITY: KRS 164.744(2),***[164.748(4), 164.753(3),]*** 164.7894
NECESSITY, FUNCTION, AND CONFORMITY: KRS 164.744(2) authorizes the authority to provide scholarships.***[KRS 164.748(4) and 164.753(3) require the authority to promulgate administrative regulations pertaining to the awarding of scholarships as provided in KRS 164.740 to 164.7894.]*** KRS 164.7894(6) requires the authority to promulgate administrative regulations as may be needed for the administration of the program. This administrative regulation establishes recording and reporting requirements for educational institutions under the Kentucky Coal County College Completion Scholarship Program.

Section 1. End-of-Term Reporting. (1) At the end of each academic term, the institution shall submit to the authority an accurate and complete record of the scholarship recipient's status including:

(a) Number of credit hours successfully completed during the academic term;
(b) Total credit hours earned as of the end of the academic term; and
(c) If the student has earned a bachelor's degree:
1. The date of graduation;
2. The degree earned; and
3. The degree major.

(2) Reports under this section shall be completed before funds for the next academic term under this program will be disbursed by the authority.

Section 2. Records and Reports. An educational institution shall:

(1) Establish an organized system of records pertaining to scholarship recipient eligibility;
(2) Maintain these records for a period of not less than three (3) years after the award year in which the recipient ceased enrollment; and
(3) Upon request, make available to the authority:
(a) All records relied upon by that institution to certify that any recipient of funds from the authority is an eligible student; and
(b) Information necessary to verify that the institution has complied with:
1. 11 KAR Chapter 20; and
2. Representations and requirements contained in its agreement with the authority.

LISA PAYNE, Chair
APPROVED BY AGENCY: September 30, 2014
FILED WITH LRC: October 10, 2014
CONTACT PERSON: Ms. Diana L. Barber, General Counsel, Kentucky Higher Education Assistance Authority, P.O. Box 798, Frankfort, Kentucky 40602-0798, phone (502) 696-7298, fax (502) 696-7293.

KENTUCKY HIGHER EDUCATION ASSISTANCE AUTHORITY
Division of Student and Administrative Services
(As Amended at ARRS, December 9, 2014)

11 KAR 20:070. Dual enrollment under consortium agreement.

RELATES TO: KRS 164.7894
STATUTORY AUTHORITY: KRS 164.744(2),***[164.748(4), 164.753(3),]*** 164.7894
NECESSITY, FUNCTION, AND CONFORMITY: KRS 164.744(2) authorizes the authority to provide scholarships.***[KRS 164.748(4) and 164.753(3) require the authority to promulgate administrative regulations pertaining to the awarding of scholarships as provided in KRS 164.740 to 164.7894.]*** KRS 164.7894(6) requires the authority to promulgate administrative regulations as may be needed for the administration of the program. This administrative regulation sets the conditions for Kentucky Coal County College Completion Scholarship Program eligibility for students simultaneously enrolled in two (2) or more participating educational institutions.

Section 1. For purposes of the Kentucky Coal County College Completion Scholarship Program, a student who is otherwise eligible pursuant to 11 KAR 20:010, except that the student is enrolled simultaneously in two (2) or more educational institutions pursuing an eligible program of study jointly offered by those institutions, shall be eligible under this section if:

(1) The program of study is covered by a consortium agreement between the educational institutions;
(2) The student is carrying a combined academic workload at all educational institutions in the consortium equal to full-time enrollment at the primary institution; and
(3) The primary institution is the institution that the student indicated he or she would be attending at the time the award under

this program is made.

Section 2. Consortium Agreement. Two (2) or more eligible educational institutions under the Kentucky Coal County College Completion Scholarship Program, as either participating or nonparticipating institutions, may, for purposes of Section 1 of this administrative regulation, execute a consortium agreement which meets the following terms and conditions:

(1) The agreement shall be written and signed by authorized representatives of each participating educational institution;

(2) The agreement shall designate which educational institution will serve as the primary institution; and

(3) The agreement shall specify:

(a) The tuition, fees, room and board cost, and all other costs assessed to the student by each institution; and

(b) That the primary institution will perform the duties set forth in Section 3 of this administrative regulation.

Section 3. Duties of Primary Institution. For purposes of Section 2 of this administrative regulation, the primary institution designated in a consortium agreement shall assume the following duties and responsibilities:

(1) Counsel students, who are enrolled or accepted for enrollment in programs of study covered by the consortium agreement, concerning student eligibility, rights, and responsibilities under the Kentucky Coal County College Completion Scholarship Program;

(2) Maintain all records, including information from all participating institutions about the student's grades, institutional costs incurred, financial aid received, enrollment, and all other information related to the student's eligibility as is required to be maintained on any other scholarship recipient enrolled only in the primary institution;

(3) Disburse the Kentucky Coal County College Completion scholarship;

(4) Confer academic credit to the student for all courses completed at other educational institutions under the consortium agreement as if the courses had been provided by the primary institution;

(5) Monitor the student's enrollment status at all educational institutions in the consortium and indicate the student's enrollment at the primary institution as the equivalent of the combined enrollment at all educational institutions in the consortium;

(6) Calculate any refund or repayment and make any refund based on the primary institution's refund policy, based upon any change in enrollment at any of the educational institutions in the consortium, as if the student were enrolled only at the primary institution; and

(7) Provide to the authority, on behalf of all educational institutions in the consortium, all reports and notifications required by ***KRS 164.7894 and 11 KAR 20:010 through 20:060[~~law or administrative regulation~~]*** as if the student were enrolled only at the primary institution.

Section 4. The consortium agreement may contain any other terms and conditions, not inconsistent with this administrative regulation, as may be ***considered[~~deemed~~]*** necessary or appropriate by the participating educational institutions.

LISA PAYNE, Chair

APPROVED BY AGENCY: September 30, 2014

FILED WITH LRC: October 10, 2014 at 1 p.m.

CONTACT PERSON: Ms. Diana L. Barber, General Counsel, Kentucky Higher Education Assistance Authority, P.O. Box 798, Frankfort, Kentucky 40602-0798, phone (502) 696-7298, fax (502) 696-7293.

EDUCATION PROFESSIONAL STANDARDS BOARD
(As Amended at ARRS, December 9, 2014)

16 KAR 5:060: Literacy program requirements for middle school, high school, grades 5-12, and grades P-12 certification programs.

RELATES TO: KRS 161.028, 161.030, 164.945, 164.946, 164.947, 20 U.S.C. 1021-1022h

STATUTORY AUTHORITY: KRS 161.028, 161.030

NECESSITY, FUNCTION, AND CONFORMITY: KRS 161.028(1) authorizes the Education Professional Standards Board to establish standards and requirements for obtaining and maintaining a teaching certificate and for programs of preparation for teachers and other professional school personnel. KRS 161.030(1) requires all certificates issued under KRS 161.010 to 161.126 to be issued in accordance with the administrative regulations of the board. This administrative regulation establishes the literacy preparation requirements for middle school, high school, Grades 5-12, and Grades P-12 certification educator preparation programs.

Section 1. (1) ***Each[~~All~~]*** middle school, high school, Grades 5-12, and Grades P-12 certification educator preparation ***program[~~programs~~]*** shall require candidates admitted to the program on or after August 1, 2016, to demonstrate the six (6) International Reading Association Standards 2010: Middle and High School Content Classroom Teacher as published in the Standards for Reading Professionals – Revised 2010.

(2) A middle school, high school, Grades 5-12, or Grades P-12 certification educator preparation program shall require a candidate admitted to the program on or after August 1, 2016, to complete one (1) of the following:

(a) A three (3) hour content literacy course aligned to the six (6) International Reading Association Standards 2010: Middle and High School Content Classroom Teacher and taught by faculty qualified to deliver literacy instruction; or

(b) ***Two (2)[~~One (1)~~]*** or more courses aligned to the six (6) International Reading Association Standards 2010: Middle and High School Content Classroom Teacher and taught by faculty qualified to deliver literacy instruction.

(3) In addition to ***the[~~any~~]*** program approval requirements ***established*** in 16 KAR 5:010, an educator preparation unit seeking program approval for a middle school, high school, Grades 5-12, or Grades P-12 certification program shall submit the following information:

(a) The course or courses the program has developed to ensure that each candidate demonstrates the six (6) International Reading Association Standards 2010: Middle and High School Content Classroom Teacher;

(b) The syllabus for each course aligned to the six (6) International Reading Association Standards 2010: Middle and High School Content Classroom Teacher;

(c) The assessments, including any scoring instruments, developed for each course aligned to the six (6) International Reading Association Standards 2010: Middle and High School Content Classroom Teacher to demonstrate the candidate's competency to provide classroom instruction aligned to each standard;

(d) The faculty assigned to teach each course aligned to demonstrate the six (6) International Reading Association Standards 2010: Middle and High School Content Classroom Teacher; and

(e) Evidence of qualifications of each faculty member assigned to teach a course aligned to the six (6) International Reading Association Standards 2010: Middle and High School Content Classroom Teacher.

Section 2. (1) ***Each[~~All currently~~]*** approved middle school, high school, Grades 5-12, and Grades P-12 certification educator preparation ***program[~~programs~~]*** shall submit the following information to the Education Professional Standards Board by June 1, 2016:

(a) The course or courses the program has developed to ensure that each candidate demonstrates the six (6) International Reading Association Standards 2010: Middle and High School Content Classroom Teacher;

(b) The syllabus for each course aligned to the six (6) International Reading Association Standards 2010: Middle and High School Content Classroom Teacher;

(c) The assessments, including any scoring instruments, developed for each course aligned to the six (6) International Reading Association Standards 2010: Middle and High School Content Classroom Teacher to demonstrate the candidate's competency to provide classroom instruction aligned to each standard;

(d) The faculty assigned to teach each course aligned to demonstrate the six (6) International Reading Association Standards 2010: Middle and High School Content Classroom Teacher; and

(e) Evidence of qualifications of each faculty member assigned to teach a course aligned to the six (6) International Reading Association Standards 2010: Middle and High School Content Classroom Teacher.

(2) ***An[A currently]*** approved middle school, high school, Grades 5-12, or Grades P-12 certification educator preparation program ***that[which]*** does not submit the information to the Education Professional Standards Board by June 1, 2016, as required ***by[in]*** subsection (1) of this section, shall no longer admit candidates.

Section 3. Incorporation by Reference. (1) "The Standards for Reading Professionals – Revised 2010", 2010, is incorporated by reference.

(2) This material may be inspected, copied, or obtained, subject to applicable copyright law, at the Education Professional Standards Board, 100 Airport Road, 3rd Floor, Frankfort, Kentucky 40601, Monday through Friday, 8:00 a.m. to 4:30 p.m.

CASSANDRA WEBB, Chairperson

APPROVED BY AGENCY: October 13, 2014

FILED WITH LRC: October 14, 2014 at noon

CONTACT PERSON: Alicia A. Sneed, Director of Legal Services, Education Professional Standards Board, 100 Airport Road, Third Floor, Frankfort, Kentucky 40601, email alicia.sneed@ky.gov, phone (502) 564-4606, fax (502) 564-7080.

FINANCE AND ADMINISTRATION CABINET
Kentucky Retirement Systems
(As Amended at ARRS, December 9, 2014)

105 KAR 1:410. Kentucky Retirement Systems Health Insurance and Kentucky Retirement Systems Insurance Fund Trust.

RELATES TO: KRS ***16.505(26), 16.576(4), 61.510(27),*** 61.645(9)(g), 61.701, 61.702, ***78.510(26),*** 26 U.S.C. 105(b), 115, 213(d), Pub.L. 111-148

STATUTORY AUTHORITY: KRS 61.645(9)(g), 61.701***(6)***, 61.702

NECESSITY, FUNCTION, AND CONFORMITY: KRS 61.645(9)(g) requires the Board of Trustees of Kentucky Retirement Systems to promulgate all administrative regulations necessary or proper in order to carry out the provisions of KRS 61.515 to 61.705, 16.510 to 16.652, and 78.520 to 78.852. ***KRS 61.701(6) authorizes the board to promulgate administrative regulations to ensure the income of the Kentucky Retirement Systems Insurance Fund is exempt from taxation under Title 26 of the United States Code. KRS 61.702 requires the board to promulgate administrative regulations concerning requirements for a medical insurance reimbursement program.[The Kentucky Retirement Systems Insurance Fund established by KRS 61.701 is a trust fund under the laws of the Commonwealth and is dedicated to providing health insurance benefits as provided in KRS 61.702. KRS 61.702 provides for health and hospital insurance for eligible retirees, spouses, dependents, and beneficiaries.]*** This administrative regulation establishes procedures for the administration of the Kentucky Retirement Systems health and hospital insurance benefits***,*** as well as establishing eligibility requirements, necessary documentation for proof of insurance, deadlines for filing for reimbursement, and forms.

Section 1. Definitions. (1) ***"Dependent child", as used in KRS 61.702(4), is defined by KRS 16.505(17).***

(2) "Monthly contribution rate" means:

(a) The amount determined by the board as the maximum contribution the retirement systems will pay toward the health insurance premium of a retiree whose membership date is on or before June 30, 2003, including retirees who were hired by a participating agency prior to June 30, 2003***,*** and who established a membership date between July 1, 2003***,*** and July 12, 2004; or

(b) For a retiree whose membership date is on or after July 1, 2003, the amount per month earned by the retiree based on years of service as provided in KRS 61.702(8).***[(2) For purposes of KRS 61.702(4)(b), "dependent child" shall be defined as in KRS 16.505(17).]***

(3) "Recipient" ***is defined by KRS 61.510(27)[shall be defined as in KRS 16.505(26), 61.510(27) and 78.510(26)]***.

Section 2. Trust Fund. (1) ***Pursuant to KRS 61.701, fund assets shall be dedicated for use toward health benefits,[The trust fund is created for the purpose of providing a trust fund separate from the retirement funds. Fund assets are dedicated for use for health benefits]*** as provided in KRS 61.702, and as permitted under ***26 U.S.C. 105 and 106 of[Sections 105 and 106 of]*** the United States Internal Revenue Code, to retired recipients and employees of employers participating in the Kentucky Employees Retirement System, County Employees Retirement System, and State Police Retirement System***. Certain dependents or beneficiaries shall be included, such as[, and to certain of their dependents or beneficiaries, including, but not limited to,]*** qualified beneficiaries as described in ***42 U.S.C. 300bb-8(3)[Sections 2201 et seq.]*** of the United States Public Health Service Act.

(2) The board shall manage the assets of the trust fund in ***accordance with KRS 61.701(3)[the same manner in which it administers the retirement funds. However, separate accounting and financial reporting shall be maintained for the trust fund]***.

(3) Employers participating in the trust fund ***shall be limited in accordance with KRS 61.701(4)[are limited to the Commonwealth, political subdivisions of the Commonwealth, and entities the income of which is exempt from taxation under Section 115 of the United States Internal Revenue Code. No other entity may participate in the trust fund]***.

(4) If the trust fund is terminated, the assets in the trust fund may revert***[, after the payment of all liabilities,]*** to the participating employers***, in accordance with KRS 61.701(5)[as determined by the board of trustees]***.

(5) The board of trustees may adopt a trust agreement and take all action ***authorized by KRS 61.701(6)[necessary and appropriate to provide that the income of the trust fund is exempt from taxation under the United States Internal Revenue Code]***.

Section 3. (1) A person shall not be eligible to participate in the group health plans administered by Kentucky Retirement Systems until the person is a recipient of a monthly retirement allowance as defined in KRS 16.505(26), 61.510(27), or 78.510(26), except as provided in KRS 16.576(4).

(2) A person who retires under disability retirement shall not be eligible to participate in the group health plans administered by Kentucky Retirement Systems until the month the person receives the person's first monthly retirement allowance payment.

(3) A recipient's spouse or dependent ***shall not be[is not]*** eligible to participate in one (1) of the group health plans administered by Kentucky Retirement Systems unless the recipient

is participating in one (1) of the group health plans administered by Kentucky Retirement Systems.

(4) An alternate payee ***shall not be[~~is not~~]*** eligible for participation in the group health plans administered by Kentucky Retirement Systems.

Section 4. (1) The board shall adopt monthly contribution rates as follows:

(a) Hazardous Medicare eligible coverage;

(b) Non-hazardous Medicare eligible coverage;

(c) Hazardous non Medicare eligible coverage; and

(d) Non-hazardous, non-Medicare eligible coverage.

(2) The board may adopt separate contribution rates for tobacco and non-tobacco users.

Section 5. (1) A recipient, spouse, or dependent who is Medicare eligible shall ***not*** participate in the ***non*** Medicare eligible group health plan offered through Kentucky Retirement Systems.

(2) A recipient, spouse, or dependent who is not ***Medicare eligible[~~Medicare-eligible~~]*** shall participate in the non Medicare eligible group health plan offered through Kentucky Retirement Systems***, unless the recipient, spouse, or dependent waives participation in the non Medicare eligible group health insurance plan in writing***.

(3) If a recipient, spouse, or dependent is eligible for Medicare but the other persons enrolled in the group health plan are not***,[~~;~~]*** then the recipient, spouse, or dependent who is not eligible for Medicare ***may[~~shall~~]*** continue to participate in the non-Medicare eligible group health plan offered through Kentucky Retirement Systems.

Section 6. (1) The monthly contribution rate paid by Kentucky Retirement Systems towards health insurance premiums for a recipient shall not exceed the monthly contribution rate to which the recipient is entitled under KRS 61.702.

(2) A retiree who is not eligible for coverage based on hazardous service and who is receiving more than one (1) monthly retirement allowance from one (1) of the plans administered by Kentucky Retirement Systems shall not receive more than the single monthly contribution rate for the plan chosen by the recipient.

(3) A retiree who retired based on reciprocity with any of the state-administered retirement systems shall only receive the monthly contribution rate to which the retiree is entitled based on the retiree's service credit with the retirement systems administered by Kentucky Retirement Systems.

(4) Pursuant to KRS 61.702(4)(b), funds from the insurance trust fund or the 401(h) accounts provided for in KRS 61.702(2)(b) shall be used to pay a percentage of the monthly contribution rate for family coverage for the spouse and each dependent child as defined in KRS 16.505(17).

Section 7. (1)(a) If the retirement system utilizes the group health insurance provided by the Kentucky Department of Employee Insurance to provide health insurance coverage for its non-Medicare eligible recipients, then the retirement system shall provide recipients with the forms required by the Kentucky Department of Employee Insurance for enrollment, waiver, or changes to the group health plan for recipients of a monthly retirement allowance from any of the state-administered retirement systems.

(b) The retirement systems shall provide the Form 6200, Kentucky Retirement Systems Medicare Eligible Insurance Enrollment Form to ***Medicare eligible[~~Medicare-eligible~~]*** recipients.

(2)(a) The board shall adopt a default plan in which a recipient who did not submit an insurance form shall be enrolled.

(b) If the recipient fails to submit an insurance form to the retirement office by the last day of the month prior to the month the initial retirement allowance is paid, the recipient shall be automatically enrolled in the plan adopted by the board as the default plan.

(c) If the recipient fails to submit an insurance form to the retirement office by the last day of the month the recipient becomes eligible for Medicare, the recipient shall be automatically enrolled in the plan adopted by the board as the default plan.

Section 8. (1) The recipient of health and hospital insurance whose premium exceeds the recipient's monthly retirement allowance shall pay the balance of the health insurance premium to the retirement systems monthly by electronic transfer of funds.

(2) The recipient shall execute a Form 6131, Bank Draft Authorization for Direct Pay Accounts.

(3)(a) If a recipient fails to remit the balance of the health insurance premium by the date provided on the invoice, then the recipient's enrollment in the group health plan provided by the retirement systems shall be cancelled the month after the last month the recipient paid the premium.

(a) If a recipient's health insurance coverage is cancelled pursuant to this section, the recipient shall not be eligible to enroll in the group health insurance plan provided by the retirement systems until the next open enrollment period for health insurance coverage.

Section 9. (1) A recipient may participate in the medical insurance reimbursement plan if the recipient lives in an area outside of the coverage of the group health plan provided by the retirement systems and is:

(a) A retired member of one (1) of the systems administered by Kentucky Retirement Systems;

(b) The beneficiary of a retired member with hazardous service in one (1) of the systems administered by Kentucky Retirement Systems; or

(c) The beneficiary of a retired member with service as a member of the General Assembly.

(2) The reimbursement plan shall be available in any month the recipient is not eligible for:

(a) In-network benefits through a health provider offered through the state group medical insurance administered by the Commonwealth of Kentucky; or

(b) Coverage under an indemnity plan offered to and providing the same payments for medical services to retired members residing in Kentucky.

(3) Medical insurance premiums eligible for reimbursement shall be the premiums for hospital and medical coverage paid for by the eligible recipient up to the applicable monthly contribution rate***[~~adopted by the board~~]***.

(4) An eligible recipient shall file a Form 6240, Application for Medical Insurance Reimbursement at the retirement office with one (1) or more of the following as proof of payment for hospital and medical insurance premiums:

(a) A copy of the invoice from the insurance company and copy of the receipt of payment;

(b) A copy of the invoice from the insurance company and copy of the front and back of the cancelled check made out to the insurance company;

(c) A copy of the eligible recipient's pay stub if the pay stub clearly shows a deduction for hospital and medical insurance;

(d) A statement from the eligible recipient's employer listing dates and amounts of premiums deducted from wages;

(e) A copy of a bank statement showing deductions for hospital and medical insurance if the statement clearly indicates payment to a company that provides only hospital and medical insurance;

(f) A copy of a bank statement showing deductions to an insurance company along with a statement from the insurance company listing dates and amounts of premiums; or

(g) Other documentation which ***is necessary[~~the retirement system determines is sufficient~~]*** to prove payment for hospital or medical insurance.

(5) An eligible recipient shall file a Form 6240, Application for Medical Insurance Reimbursement each calendar year for reimbursement. An eligible recipient may file a Form 6240, Application for Medical Insurance Reimbursement each quarter of a calendar year for reimbursement.

(6) If the eligible recipient files a completed Form 6240, Application for Medical Insurance Reimbursement and the required

proof, the eligible recipient shall be reimbursed on the following schedule:

(a) In May, if the documentation is filed at the retirement office by April 20;

(b) In August, if the documentation is filed at the retirement office by July 20;

(c) In November, if the documentation is filed at the retirement office by October 20; or

(d) In February, if the documentation is filed at the retirement office by January 20.

(7) The retirement system shall not reimburse an eligible recipient for premiums for a calendar year if the eligible recipient fails to file at the retirement office a Form 6240, Application for Medical Insurance Reimbursement and required proof by March 20 of the following calendar year.

(8) The retirement system may verify the recipient's eligibility for reimbursement for hospital and medical insurance by requesting verification of coverage and payments directly from the insurance company indicated on the Form 6240, Application for Medical Insurance Reimbursement.

(9)(a) If a recipient receives a payment from the retirement system which does not qualify as a medical insurance premium reimbursement, the recipient shall return the payment to the retirement system.

(b) If the recipient fails to return the payment, the retirement systems may withhold the payment from the recipient's monthly retirement allowance payment.

Section 10. Incorporation by Reference. (1) The following material is incorporated by reference:

(a) The ***"Kentucky Retirement Systems Insurance Fund Trust Agreement"[Trust Agreement, Kentucky Retirement Systems Insurance Fund Trust]***, dated August 21, 2008;

(b) Form 6131, "Bank Draft Authorization for Direct Pay Accounts", September 2014;

(c) Form 6240, "Application for Medical Insurance Reimbursement," July 2011; and

(d) Form 6200, "Kentucky Retirement Systems Medicare Eligible Insurance Enrollment Form," September 2014.

(2) This material may be inspected, copied, or obtained, subject to applicable copyright law, at the Kentucky Retirement Systems, Perimeter Park West, 1260 Louisville Road, Frankfort, Kentucky 40601, Monday through Friday, 8 a.m. to 4:30 p.m.

THOMAS ELLIOTT, Chair

APPROVED BY AGENCY: September 11, 2014

FILED WITH LRC: October 2, 2014 at 2 p.m.

CONTACT PERSON: Jennifer A. Jones, Assistant General Counsel, Kentucky Retirement Systems, Perimeter Park West, 1260 Louisville Road, Frankfort, Kentucky 40601, phone (502) 696-8800 ext. 5501, fax (502) 696-8801.

TOURISM, ARTS AND HERITAGE CABINET
Kentucky Heritage Council
(As Amended at ARRS, December 9, 2014)

300 KAR 6:010. Historic rehabilitation tax credit certifications.

RELATES TO: KRS 171.396, 171.3961, 171.397, 16 U.S.C. 470a(a)(1), 36 C.F.R. ***[Parts]*** 60, 67***, 42 U.S.C. 12101***

STATUTORY AUTHORITY: KRS 171.397***(12),*** (14)

NECESSITY, FUNCTION, AND CONFORMITY: KRS 171.397***(12) and*** (14) authorizes the Kentucky Heritage Council to promulgate administrative regulations to implement the certified historic structures rehabilitation tax credit ***and to impose fees for tax credit applications***. This administrative regulation establishes the application process to determine a taxpayer's eligibility to claim a certified historic structure rehabilitation tax credit.

Section 1. Definitions. (1) "Act" means the enabling legislation for the historic rehabilitation tax credit, KRS 171.396 to 171.397.

(2) "Adjusted basis of the structure" means the purchase price of the property, minus the cost of land, plus improvements already made, minus allowable depreciation[already taken].

(3) "Certified historic structure" is defined by KRS 171.396(1).

(4) "Certified rehabilitation" is defined by KRS 171.396(2).

(5) "Certified rehabilitation credit cap" is defined by KRS 171.396(3).

(6) "Completed rehabilitation project" means any certified historic structure which has been substantially rehabilitated and, after the completion date, has been submitted by the applicant to the council for final certification of rehabilitation under the Act.

(7)[(6)] "Completion date" means:

(a) For owner-occupied residential property, the month, date, and year in which the last eligible rehabilitation expense is incurred; or

(b)[for owner-occupied residential property.] For all other property,[it means] the month, date, and year when the rehabilitation project is completed to allow[such that it allows] occupancy of the entire building or some identifiable portion of the building and, if applicable, a certificate of occupancy has been issued.

(8)[(7)] "Department" means the Kentucky Department of Revenue.

(9)[(8)] "Director" means the executive director of the Kentucky Heritage Council.

(10)[(9)] "Disqualifying work" is defined by KRS 171.396(5).

(11)[(10)] "Exempt entity" is defined by KRS 171.396(6).

(12)[(11)] "File" or "filed" means physical receipt by the council of an application for certification along with the tender of the appropriate review[filing] fee.

(13) "Final amount of credit approved" means the individual credit awarded for certified rehabilitation to an owner of a certified historic structure as determined pursuant to KRS 171.397 or KRS 171.3961, whichever is applicable, when the Certificate of Rehabilitation-Part 3 is filed and approved by the council.

(14)[(12)] "Inspection" means a visit by the director or an authorized representative of the council to a property for the purposes of reviewing and evaluating the significance of the structure and the ongoing or completed rehabilitation work.

(15)[(13)] "National Register of Historic Places" means the National Register of districts, sites, buildings, structures, and objects significant in American history, architecture, archeology, engineering, and culture that the U. S. Secretary of the Interior is authorized to expand and maintain pursuant to Section 101(a)(1) of the National Historic Preservation Act of 1966, 16 U.S.C.[Section] 470a(a)(1), and implemented through 36 C.F.R. Part 60.

(16)[(14)] "Owner" means:

(a) The person, partnership, corporation, public agency, or other entity holding a fee simple interest in a property, or any other person or entity recognized by the department for purposes of the applicable tax benefit under KRS 171.397 or KRS 171.3961, whichever is applicable; or

(b) A lessee,[. For purpose of the Act, a lessee shall be considered the owner of the property] if the remaining term of the lease is not less than twenty-seven and one-half (27 1/2) years for residential property or[and] thirty-nine (39) years for all other property.

(17)[(15)] "Owner-occupied residential property" is defined by KRS 171.396(8).

(18) "Preliminary tax credit allocation" means the maximum individual credit available for certified rehabilitation to an owner of a certified historic structure as determined pursuant to KRS 171.397, on June 30 of the year in which the Certificate of Rehabilitation-Parts 1 and 2 are filed and approved by the council.

(19)[(16)] "Property" means a building and its site and landscape features.

(20)[(17)] "Qualified rehabilitation expense" is defined by KRS 171.396(9).

(21)[(18)] "Rehabilitation" means the process of returning a building or buildings to a state of utility, through repair or alteration, which makes possible an efficient use while preserving those portions and features of the building and its site and environment which are significant to its historic, architectural, and cultural values

as determined by the director.

(22)[~~(19)~~] "Rehabilitation plan" means a plan pursuant to which a certified historic structure will be substantially rehabilitated.

(23)[~~(20)~~] "Rehabilitation project" means any certified historic structure, submitted by the applicant to the council, for certifications of rehabilitation under the Act.

(24)[~~(21)~~] "Standards for rehabilitation" mean the Secretary of the Interior's Standards for Rehabilitation, 36 C.F.R. 67.7, as established by the U. S. Department of Interior and restated in Section 4(2) of this administrative regulation.

(25)[~~(22)~~] "Starting date" means the date upon which the applicant applies for the building permit for work proposed by the rehabilitation plan or the date upon which actual physical work contemplated by the plan of rehabilitation begins.

(26)[~~(23)~~] "Substantial rehabilitation" is defined by KRS 171.396(10).

(27)[~~(24)~~] "Taxpayer" is defined by KRS 171.396(11).

Section 2. Certifications of Rehabilitation. (1) For tax credits under KRS 171.3961, a request for certification of historic significance and of rehabilitation under the Act shall be a five (5) stage process that requires the filing of the following forms:

(a) Certification Application-Intent to Apply for Expanded Credit;

(b) Certification Application Part 1-Evaluation of National Register Status;

(c) Certification Application Part 2-Description of Rehabilitation;

(d) Certification Application Part 3-Request for Certification of Completed Work; and

(e) Certification Application-Summary of Investment and Election of Credit.

(2) For tax credits under KRS 171.397, a request for certification[~~certifications~~] of historic significance and of rehabilitation under the Act shall be[~~is~~] a four (4)[~~three (3)~~] stage process that requires the filing of the following forms:

(a) Certification Application Part 1-Evaluation of National Register Status;

(b) Certification Application Part 2-Description of Rehabilitation;[~~and~~]

(c) Certification Application Part 3-Request for Certification of Completed Work; and

(d) Certification Application-Summary of Investment and Election of Credit.

(3) Intent to Apply for Expanded Credit shall be a request for certification of an applicant's intent to claim a tax credit established by KRS 171.3961 for a proposed rehabilitation project.

(4)[~~(2)~~] Part 1 shall be[~~is~~] a request for certification of historic significance.

(5) Part 2 shall be[~~is~~] a request for certification of a proposed rehabilitation project.

(6)[~~(3)~~] Part 3 shall be[~~is~~] a request for certification of a completed rehabilitation project.

(7) Summary of Investment and Election of Credit shall be actual cost, square footage, and use attributed to the rehabilitation work and an irrevocable election by the taxpayer to receive a refundable credit or transfer the credit.

(8) Certification of applications shall be filed with the council as follows:

(a)1. Part 1 and Part 2 shall be filed with the council on or before April 29 for a preliminary determination of maximum credit eligibility for a credit under KRS 171.397.

2. Part 1, Part 2, and Intent to Apply for Expanded Credit shall be filed with the council on or before June 30, 2015, for a credit under KRS 171.3961[~~of the year in which the rehabilitation commences~~].

(b) Part 1 and[~~2 shall be filed with the council on or before April 29 of the year in which the rehabilitation commences.~~] Part 2 may be filed after rehabilitation has commenced, but an applicant who begins[~~applicants who begin~~] rehabilitation prior to receiving Part 2 certification assumes[~~assume~~] the risk that certification may be denied.

(c) Part 3 and Summary of Investment and Election of Credit shall be filed with the council after the completion date of a completed rehabilitation project for a final determination of credit[~~upon completion of the rehabilitation but no later than thirty (30) days following the close of the calendar year in which the completion of the rehabilitation occurred as defined in, Section 1(6) of this administrative regulation~~].

(9)[~~(4)~~] If at any stage an application is not approved by the council, the rehabilitation project shall not qualify as a certified rehabilitation for purposes of the Act.

Section 3. Certifications of Historic Significance-Part 1. (1) Application. The Certification Application Part 1-Evaluation of National Register Status form[~~forms~~] shall be timely filed with the council for certification of historic significance.

(a) Property individually listed in the National Register of Historic Places. Individually listed property shall be[~~is~~] considered certified a historic structure for purposes of the Act subject to confirmation by the council. The following information shall be provided by the applicant:

1. Names and mailing addresses of owners;

2. Name and address of property;

3. Photographic documentation of the building and property prior to and after alteration, showing exterior and interior features and spaces to insure that the listed property has not lost the characteristics which caused it to be listed on the National Register of Historic Places;

4. Descriptions of all the buildings within the listing if the property contains more than one (1) building for the purpose of determining which of the buildings are of historic significance to the property;

5. Brief description of appearance including alterations, distinctive features and spaces, and dates of construction;

6. Brief statement of significance summarizing how the property reflects the values that give its distinctive historical and visual character, and explaining any significance attached to the property itself;

7. A copy of a map indicating where the subject property is located. If an individually-listed property is also located in a historic district listed in the National Register of Historic Places, a copy of the map of the National Register historic district where the subject property is located and a clear delineation of the property's location within the district shall also be included; and

8. Signatures of owners requesting confirmation of listing in the National Register of Historic Places or concurring in the request if the owners are not the applicants.

(b) Property located in a historic district listed in the National Register of Historic Places. An applicant shall request that the property be certified by the council as a historic structure contributing to the significance of a historic district. The following information shall be provided:

1. Names and mailing addresses of owners;

2. Name and address of property;

3. Name of historic district;

4. Photographic documentation of the building and property prior to and after alteration, showing exterior and interior features and spaces, and photographic documentation of adjacent properties and structures on the street showing significance to the historic district;

5. Brief description of appearance including alterations, distinctive features and spaces, and dates of construction;

6. Brief statement of significance summarizing how the property reflects the values that give the district its distinctive historical and visual character, and explaining any significance attached to the property itself;

7. A copy of the map of the National Register historic district where the subject property is located and a clear delineation of the property's location within the district; and

8. Signatures of owners requesting certification or concurring in the request if the owners are not the applicants.

(2) Multiple structures. A property[~~Properties~~] containing more than one (1) building shall be treated as a single certified historic structure if the council determines that the buildings have been functionally-related historically to serve an overall purpose, whether the property is individually listed in the National Register

or is located within a registered historic district. Buildings that are functionally related historically shall be[are] those which have functioned together to serve an overall purpose during the property's period of significance.

(3) Standards for evaluating significance.

(a)[Some properties listed in the National Register of Historic Places are resources whose concentration or continuity possesses greater historical significance than many of their individual component buildings and structures. These usually are documented as a group rather than individually.] In addition to the existing National Register documentation, an application for certification[applications for certifications] of historic significance shall contain documentation with information about the significance of the specific buildings and structures.

(b) A property[Properties] located within a historic district listed in the National Register of Historic Places shall be evaluated for contribution to the historic significance of the district by applying the following standards:

1. A property contributing to the historic significance of a district shall be a property[is one] which by location, design, setting, materials, workmanship, feeling, and association adds to the district's sense of time and place and historical development;

2. A property not contributing to the historic significance of a district shall be a property[is one] which does not add to the district's sense of time and place and historical development; or[one] where the location design, setting, materials, workmanship, feeling and association have been so altered or have so deteriorated that the overall integrity of the property has been irretrievably lost; and

3. If the building was[Ordinarily buildings that have been] built within the past fifty (50) years, it shall not be considered to contribute to the significance of a district, unless a strong justification concerning its[their] historical or architectural merit is given or the historical attributes of the district are considered to be less than fifty (50) years old.

(c) An evaluation[Evaluations] of historic significance shall be made based upon the appearance and condition of the property before rehabilitation was begun.

(d) The qualities of a property and its environment which qualify it as a certified historic structure shall be[are] determined taking into account all available information, including information derived from the physical and architectural attributes of the building, and shall[are] not be limited to information contained in the National Register nomination reports.

(e) If a nonhistoric surface material obscures a façade, it may be necessary to remove the surface materials prior to requesting certification so that a determination of significance can be made. After the material has been removed, if the obscured façade has retained substantial historic integrity and the property otherwise contributes to the historic district, it shall be determined to be a certified historic structure.

(4) Review of Part 1 Applications.

(a) A complete and adequately-documented Certification Application Part 1-Evaluation of National Register Status form shall be reviewed by the council to determine if the property contributes to the historic significance of the district by applying the standards established[set forth] in subsection (3) of this section[3(3) of this administrative regulation].

(b) After consideration of the information contained in the application and other available information, the council shall approve the application if:

1. The property meets the standards for evaluating for significance established[set forth] in subsection (3) of this section;[3(3) of this administrative regulation,] or

2. The director confirms that the property is individually listed in the National Register of Historic Places.

(5) If the application is not adequate to complete the review, the council shall attempt to notify the applicant by mail, telephone, or e-mail[email] using the contact information provided on the application. The applicant's failure to respond may result in denial of the application. The council's notification or failure to notify shall not constitute a waiver of a deficiency[deficiencies] or an alteration of a time limitation established[limitations set forth] under the Act.

(6) An applicant[Applicants] shall notify the council of any substantial damage, alteration, or changes to a property that occurs after issuance of a Certification of Part 1-Evaluation of National Register Status. The council may, upon thirty (30) days written notice to the applicant, withdraw a certification of historic significance and may seek to have the property removed from the National Register under 36 C.F.R. 60.15.

Section 4. Certifications of Rehabilitation-Part 2. (1) Applications.

(a) A Certificate of Application Part 2-Description of Rehabilitation form[forms] shall be timely filed with the council for certification that a rehabilitation plan is a substantial rehabilitation[as defined by KRS 171.396(10),] and meets the standards for rehabilitation established in subsection (2) of this section[in Section 4(2) of this administrative regulation].

(b) A rehabilitation project[projects] shall be done according to a rehabilitation plan.

(c) The burden shall be[is] upon the applicant to supply sufficient information to the council for a determination that the rehabilitation plan is a substantial rehabilitation and meets the standards for rehabilitation.

(d) An application shall include the following information:

1.[(a)] Names and mailing addresses of owners;

2.[(b)] Name and address of property;

3.[(c)] Designation of whether the application is for owner-occupied residential property or other property;

4.[(d)] Information sufficient to establish the proposed use of the structure;

5.[(e)] The adjusted basis for the property if other than owner-occupied residential or owned by an exempt entity[as defined by KRS 171.396(6)];

6.[(f)] Proposed starting date and completion date;

7.[(g)] Projected qualified rehabilitation expenses;

8.[(h)] Numbered photographs adequate to document the appearance of the structure, both on the interior and exterior, and its site and environment before rehabilitation that correspond to numbered positions on existing plans;

9.[(i)] The taxpayer identification number or Social Security number;

10.[(j)] Written detailed description of existing features and their conditions,[;] and a written description of proposed rehabilitation work and the impact on existing features;

11.[(k)] Plans for any attached, adjacent, or related new construction, if applicable; and

12.[(l)] Signatures of owners requesting certification or concurring in the request if the owners are not the applicant.

(2) Standards for rehabilitation.

(a) The standards for rehabilitation shall be[are] the criteria used to determine if the rehabilitation qualifies as a certified historic rehabilitation.[The intent of the standards is to promote the long-term preservation of a property's significance through the preservation of historic materials and features. The standards pertain to historic buildings of all materials, construction types, sizes, and occupancy and encompass the exterior and the interior of historic buildings. The standards also encompass related landscape features and the building's site and environment, as well as attached, adjacent, or related new construction.] Rehabilitation shall be consistent with the historic character of the structure or structures and, if applicable, the district in which it is located.

(b) A rehabilitation project shall meet all of the[following] standards for rehabilitation established in this paragraph.[:]

1. A property shall be used for its historic purpose or be placed in a new use that requires minimal change to the defining characteristics of the building and its site and environment.[;]

2. The historic character of a property shall be retained and preserved. The removal of historic materials or alteration of features and spaces that characterize a property shall be avoided.[;]

3. Each property shall be recognized as a physical record of its time, place, and use. A change that creates[Changes that create] a false sense of historical development, such as adding a conjectural feature[features] or architectural element[elements] from another

building[other buildings], shall not be undertaken.[;]

4. Changes to the property[Most properties change over time; those changes] that have acquired historic significance in their own right shall be retained and preserved.[;]

5. Distinctive features, finishes, and construction techniques or examples of craftsmanship that characterize a historic property shall be preserved.[;]

6. Deteriorated architectural features shall be repaired rather than replaced. If the severity of deterioration requires replacement of a distinctive feature, the new feature shall match the old in design, color, texture, and other visual qualities and, if possible, materials. Replacement of missing architectural features shall be substantiated by documentary, physical, or pictorial evidence.[;]

7. Chemical or physical treatments, such as sandblasting, that cause damage to historic materials shall not be used. The surface cleaning of structures, if appropriate, shall be undertaken using the gentlest means possible.[;]

8. Significant archeological resources affected by a project shall be protected and preserved. If these resources shall be disturbed, mitigation measures shall be undertaken.[;]

9. New additions, exterior alterations, or related new construction shall not destroy historic materials that characterize the property. The new work shall be differentiated from the old and shall be compatible with the massing, size, scale, and architectural features to protect the historic integrity of the property and its environment.[; and]

10. New additions and adjacent or related new construction shall be undertaken in such a manner that if removed in the future, the essential form and integrity of the historic property and its environment would be unimpaired.

(c) The quality of materials, craftsmanship, and related new construction in rehabilitation shall match the quality of materials, craftsmanship, and design of the historic structure in question. Certain treatments, if improperly applied, or certain materials by their physical properties, may cause or accelerate physical deterioration of historic buildings, and use of these treatments or materials shall result in denial of certification. The burden shall be[is] upon the applicant to consult with the council for a determination as to what rehabilitation measures are appropriate for the structure. Inappropriate rehabilitation measures on historic properties shall include:

1. Improper masonry repointing materials and techniques;

2. Improper exterior masonry cleaning methods;

3. Improper introduction of insulation if damage to historic fabric would result; and

4. Incompatible additions and new construction.

(d)[In certain limited cases, it may be necessary to dismantle and rebuild portions of a certified historic structure to stabilize and repair weakened structural members and systems. In these cases,] The council may consider the dismantling and rebuilding of a portion of a certified historic structure to stabilize and repair weakened structural members and systems[this extreme intervention] as[part of] a certified historic rehabilitation if:

1. The necessity for dismantling is justified in supporting documentation;

2. Significant architectural features and overall design are retained; and

3. Adequate historic materials are retained to maintain the architectural and historic integrity of the overall structure.

(3) Substantial rehabilitation. A rehabilitation project shall be a substantial rehabilitation only if the requirements of KRS 171.396(9) and (10) are met. To determine whether a rehabilitation project is a substantial rehabilitation, the[following] conditions established in this subsection shall apply.[:]

(a) Increases to the adjusted basis of the structure shall include capital improvements to the structure, legal fees incurred for perfecting title, and zoning costs. Any depreciation previously claimed for the structure shall be subtracted from this figure.

(b) If a cost only partially qualifies as an eligible rehabilitation expense because some of the cost is attributable to the enlargement of the building, the expenditures shall be apportioned proportionately between the original portion of the building and the enlargement.

(c) In addition to the expenses listed in KRS 171.396(9), qualified rehabilitation expenses shall include:

1. The cost of work done to structural components of the building within the footprint of the historic structure if they are permanent;

2. Costs related to new heating, plumbing, and electrical systems, as well as expenses related to updating kitchens and bathrooms, compliance with the Americans with Disabilities Act of 1990 (42 U.S.C.[Section] 12101), and fire suppression systems and fire escapes; and

3. The cost of architectural and engineering fees, site survey fees, legal expenses, development fees, and other construction-related costs, if those[such] costs are added to the basis of the property.

(d) In addition to the exclusions listed in KRS 171.396(9), qualified rehabilitation expenses shall[do] not include the construction costs for a new building, parking lot, or sidewalk[buildings, parking lots, or sidewalks].

(4) Review of Part 2 Applications.

(a) A complete and adequately documented Certification Application Part 2- Description of Rehabilitation shall be reviewed by the council for a determination that the rehabilitation plan is a substantial rehabilitation and meets the standards for rehabilitation.

(b) After consideration of the information contained in the application and other available information, the council shall issue a preliminary certification of rehabilitation if the rehabilitation plan is a substantial rehabilitation[as defined by KRS 171.396(10),] and meets the standards for rehabilitation established[set forth] in subsection (2) of this section[4(2) of this administrative regulation].

(5)(a) If the application is not adequate to complete the review or if revisions to the rehabilitation project are necessary to meet the standards of rehabilitation established[set forth] in subsection (2) of this section[4(2) of this administrative regulation], the council shall attempt to notify the applicant by mail, telephone, or e-mail[email] using the contact information provided on the application.

(b) An applicant's failure to respond may result in denial of the application.

(c) The council's notification or failure to notify shall not constitute a waiver of a deficiency[deficiencies] or an alteration of a time limitation established[limitations set forth] under the Act.

(6) Changes to rehabilitation plans. Once a rehabilitation plan has been approved by the council, an applicant may[can] only make substantive changes in the work described in the application by:

(a) Filing a Certification Application-Continuation/Amendment form with the council; and

(b) Receiving notification from the council that the revised plan continues to meet the standards of rehabilitation established[set forth] in subsection (2) of this section[4(2) of this administrative regulation] and is a substantial rehabilitation[as defined by KRS 171.396(10) set forth in 300 KAR 6.010, Section 4(3)].

Section 5. Certifications of Rehabilitation-Part 3 Completed Work. (1) Application. Upon completion of a rehabilitation project, an applicant shall[timely] file a Certification Application Part 3-Request for Certification of Completed Work form with the council for final certification of rehabilitation. An application shall include the following information:

(a) Names and mailing addresses of owners;

(b) Name and address of property;

(c) Designation of whether the application is for owner-occupied residential property or other property;

(d) Actual starting date and completion date;

(e) Actual qualified rehabilitation expenses;

(f) Photographs adequate to document the appearance of the structure, both on the interior and exterior, and its site and environment during and after rehabilitation;

(g) The taxpayer identification number or Social Security number; and

(h) Signatures of owners or a representative authorized to sign on behalf of the owner requesting certification.

(2) Summary of Investment and Election of Credit. In addition to filing a Certification Application Part 3-Request for Certification

of Completed Work form, the applicant shall file a Summary of Investment and Election of Credit form with the council. The Summary of Investment and Election of Credit shall include the following:

(a) Names and mailing addresses of the owners;

(b) Name and address of the property;

(c) Actual costs attributed to the rehabilitation work;

(d) Signatures of the owners or a representative authorized to sign on behalf of the owner;[~~and~~]

(e) Notarization of the signatures if the property is an owner-occupied residence or, for all other property, compilation[~~certification~~] by a certified public accountant or equivalent of the actual costs attributed to the rehabilitation of the historic structure; and

(f) An irrevocable election by the taxpayer to:

1. Use the credit, in which case, the credit shall be refundable; or

2. Transfer the credit***, pursuant to[~~as established in~~]*** KRS 171.397(8).

(3) Scope of review.

(a)1. Rehabilitation shall encompass[~~encompasses~~] all work on the interior and exterior of the certified historic structure or structures and the site and environment, as determined by the council, as well as related demolition, new construction, or rehabilitation work which may affect the historic qualities, integrity or site, landscape features, and environment of the certified historic structure.

2. Conformance to the standards of rehabilitation established[~~set forth~~] in Section 4(2) of this administrative regulation shall be determined on the basis of application documentation and other available information by evaluating the property as it existed prior to the commencement of rehabilitation.

(b) A phased rehabilitation project shall not be[~~rehabilitations projects are not~~] permitted. Each rehabilitation project shall be self-contained[~~selfcontained~~], and completion of the rehabilitation project shall not be contingent upon a phased rehabilitation to commence after receiving final certification of rehabilitation.

(c) Portions of a completed rehabilitation project that are not in conformance with the standards for rehabilitation shall not be exempted, and may result in denial of the Certification Application Part 3-Request for Certification of Completed Work.

(4) Review of Part 3 Applications. A complete and adequately-documented Certification Application Part 3 - Request for Certification of Completed Work shall be reviewed by the council for a determination that the completed rehabilitation project is a certified rehabilitation and a determination of the final amount of credit approved. The council shall issue a final certification of rehabilitation if all the following requirements have been met:

(a) All elements of the completed rehabilitation project meet the standards for rehabilitation as established[~~defined~~] in Section 4(2) of this administrative regulation;[~~and~~]

(b) The completed rehabilitation project was a substantial rehabilitation[~~as defined by KRS 171.396(10)~~]; and

(c) Part 3 was filed with the council after the completion date[~~as defined in, Section 1(5) of this administrative regulation, and within thirty (30) days following the close of the calendar year in which the completion of the rehabilitation occurred~~].

(5) If the application is not adequate to complete the review or if revisions to the rehabilitation project are necessary to meet the standards of rehabilitation established[~~set forth~~] in Section 4(2) of this administrative regulation, the council shall attempt to notify the applicant by mail, telephone, or e-mail[~~email~~] using the contact information provided on the application. Applicant's failure to respond may result in denial of the application. The council's notification or failure to notify shall not constitute a waiver or alteration of time limitations established[~~set forth~~] under the Act.

Section 6. Recapture of Preliminary Tax Credit Allocation For Credits Under KRS 171.397. (1) Notice of Recapture. For tax credits under KRS 171.397, if an owner fails to obtain a Certification of Completed Work within thirty-six (36) months from the date of the taxpayer's preliminary allocation of tax credit, the director shall mail to the owner written notice of recapture of the preliminary tax credit allocation.

(2) Objection.

(a) If the owner objects to the recapture of the preliminary allocation of tax credit, the owner shall file written notice of objection accompanied by a supporting statement setting forth grounds for objection within forty-five (45) days of the date of the notice of recapture.

(b) If the owner does not timely object, the preliminary tax credit allocation shall be recaptured by the council and added to the certification rehabilitation credit cap for the next calendar year***, pursuant to[~~as established in~~]*** KRS 171.397(2)(c).

(3) Reinstatement. Within thirty (30) days of receipt of the owner's notice of objection, the council shall review the objection and determine if the owner has provided reasonable grounds as established in subsection (5) of this section to reinstate the preliminary allocation.

(a) If the council determines that the preliminary tax credit allocation shall be reinstated, the:

1. Council shall give the owner written notice that the preliminary tax credit allocation has been reinstated for an additional twenty-four (24) months;

2. Owner shall pay a review fee for a Part 2 application in the amount established in Section 10***(2) and (3)[~~(1) or (2)~~]*** of this administrative regulation, whichever is applicable; and

3. Owner shall obtain a Certification of Completed Work on or before the expiration of twenty-four (24) months. If the owner fails to obtain a Certification of Completed Work or fails to request an extension under subsection (4) of this ***section[~~administrative regulation~~]***, the council shall initiate recapture of the preliminary tax credit allocation under the procedures established in ***this section[~~Section 6 of this administrative regulation~~]***.

(b) If the council determines that the preliminary tax credit allocation shall not be reinstated:

1. The council shall give the owner written notice that the preliminary tax credit allocation has not been reinstated;

2. The owner shall be given thirty (30) days from the date of the notice that the preliminary tax credit allocation has not been reinstated to file an appeal***, pursuant to[~~as established in~~]*** Section 8 of this administrative regulation; and

3. If the owner fails to file a timely appeal***, pursuant to[~~as established in~~]*** Section 8 of this administrative regulation:

a. The preliminary allocation shall not be reinstated;

b. The preliminary tax credit allocation shall be recaptured by the council; and

c. The preliminary tax credit allocation shall be added to the certification rehabilitation credit cap for the next calendar year***, pursuant to[~~as established in~~]*** KRS 171.397(2)(c).

(4) Extension of Preliminary Tax Credit Allocation. (a) At any time prior to expiration of thirty-six (36) months from the date of the taxpayer's preliminary allocation of tax, an owner may request in writing that the preliminary tax credit allocation be extended for a period of twenty-four (24) months if the:

1. Owner provides written documentation of reasonable grounds established in subsection (5) of this section for an extension; and

2. Owner pays a review fee for a Part 2 application in the amount established in Section 10***(2) and (3)[~~(1) or (2)~~]*** of this administrative regulation, whichever is applicable.

(b) Prior to the expiration of the twenty-four (24) month extension, the owner may request another extension under the procedures established in this subsection. There shall not be a limit on the number of extensions that an owner may request.

(5) Grounds for Reinstatement or Extension.

(a) Reasonable grounds shall be documentation of on-going efforts to obtain financial, legal, material, or physical resources necessary to complete the rehabilitation project or documentation that the delay in completion of the rehabilitation project is necessary and unavoidable.

(b) Reasonable grounds shall not include casualty loss or demolition to the extent that the structure no longer qualifies as a certified historic structure, inability to qualify as a substantial rehabilitation, or inability or unwillingness to perform work conditioned by the council and necessary to qualify the project as a

certified rehabilitation.

(c) The number of prior reinstatements or extensions shall not be a factor in determining if a reinstatement or extension shall be granted.

Section 7. Inspection. The director or an authorized representative of the council shall be permitted to conduct an inspection of the property at any time up to three (3) years after the council has issued a Certification of Completed Work to determine if the work meets the standards for rehabilitation established[~~set forth~~] in Section 4(2) of this administrative regulation.

Section 8. Appeal. A taxpayer may appeal a determination that the rehabilitation project does not qualify as a certified rehabilitation for purposes of the Act by filing an appeal in writing, in care of the council, to the director or a reviewing officer designated by the director to hear an appeal. (1) An appeal shall be made within **thirty (30)**[~~**five (5)**~~] days of the date of receipt of the determination being appealed.

(2) The director or the reviewing officer shall decide, based solely upon the record developed by the council, if the council:

(a) Reached incorrect conclusions of law;

(b) Made clearly erroneous factual findings;

(c) Did not consider relevant facts; or

(d) Abused the discretion available to that person.

(3) The director's or reviewing officer's decision shall:

(a) Confirm the determination;

(b) Reverse the determination on account of incorrect conclusions of law; or

(c) Remand the matter to the council for further proceedings.

(4) The director or reviewing officer shall decide the appeal and shall notify the taxpayer of the decision in writing within thirty (30) days from the date the appeal is received.

(5) If the appeal ***is***[~~***was***~~] decided by a reviewing officer and the reviewing officer affirms the determination, the taxpayer may appeal the reviewing officer's determination in writing to the director***, pursuant to***[~~***as established in***~~] this subsection.

(a) An appeal to the director shall be filed within the time period established in subsection (1) of this section.

(b) The director shall use the same standards of review established in subsection (2) of this section.

(c) The director shall:

1. Confirm the decision of the reviewing officer;

2. Reverse the determination on account of incorrect conclusions of law; or

3. Remand the matter to the council for further proceedings.

(d) The director shall decide the appeal and shall notify the taxpayer of the decision in writing within thirty (30) days from the date the appeal is received.

Section 9.[~~7.~~] Revocation of Owners' Certifications. (1) If, after obtaining final certification of rehabilitation, the council determines that the rehabilitation was not undertaken as represented by the owner in the applications, amendments, or supporting documentation, or the owner upon obtaining final certification undertook disqualifying work, the council may revoke a certification by giving written notice to the owner.

(2) The owner may file an appeal***, pursuant to***[~~***as established in***~~] Section 8 of this administrative regulation.

(3) If the owner fails to file a timely appeal, the final certification of rehabilitation shall be revoked[~~has thirty (30) days to comment on the matter by filing written objections with the director. The council shall notify the department of its final determination, and any tax consequences of a revocation of certification shall be determined by the department~~].

Section 10.[~~8.~~] Fees for Processing Rehabilitation Certification Requests. (1) Payment of fees for review of Parts 2 and 3 shall be filed with the council when applications are filed and are nonrefundable. Certification shall not be issued until the appropriate remittance is received. Payment shall be made by check or money order payable to the Kentucky State Treasurer.

(2) For tax credits under KRS 171.397, fees for reviewing rehabilitation certification requests of owner-occupied residential property shall be[~~are~~] charged in accordance with the following schedule. If a Part 2 application is denied, there shall not be a[~~will be no~~] charge for a Part 3 review[~~fee~~].

Rehabilitation Costs for Owner-Occupied Residences	Part 2 Review Fee	Part 3 Review Fee
Less than $100,000	$60	$40
$100,000 or greater	$150	$100

(3) For tax credits under KRS 171.397, fees for reviewing rehabilitation certification requests for all property other than owner-occupied residential property shall be[~~are~~] charged in accordance with the following schedule. If a Part 2 application is denied, there shall not be a[~~will be no~~] charge for a Part 3 review[~~fee~~].

Rehabilitation Costs for Commercial and Other Buildings	Part 2 Review Fee	Part 3 Review Fee
Less than $50,000	$60	$40
$50,000- $99,999[~~$100,000~~]	$150	$100
$100,000-$499,999	$300	$200
$500,000-$999,999	$450	$300
$1 million or greater	$900	$600

(4) For tax credits under KRS 171.3961, fees for reviewing rehabilitation certification requests shall be charged in accordance with the following schedule. If a Part 2 application is denied, there shall not be a charge for a Part 3 review.

Rehabilitation Costs	Part 2 Review Fee	Part 3 Review Fee
Greater than $15 million	$3,000	$2,500

Section 11.[~~9.~~] Incorporation by Reference. (1) The following material is incorporated by reference:

(a) "Certification Application Part 1-Evaluation of National Register Status", [~~(~~]KHC Form TC-1, Rev. 2014[~~2007)~~];

(b) "Certification Application Part 2-Description of Rehabilitation", [~~(~~]KHC Form TC-2, Rev. 2014[~~2007)~~];

(c) "Certification Application Part 3-Request for Certification of Completed Work", [~~(~~]KHC Form TC-3, Rev. 2014[~~2007)~~];

(d) "Certification Application-Continuation/Amendment", [~~(~~]KHC Form TC-2a, Rev. 2014[~~2007)~~];[~~and~~]

(e) "Summary of Investment and Election of Credit", [~~(~~]KHC Form TC-4, Rev. 2014; and

(f) "Certification Application-Intent to Apply for Expanded Credit", KHC Form TC-0, Rev. ***Dec.*** 2014[~~2007)~~].

(2) This[~~The~~] material may be inspected, copied, or obtained, subject to applicable copyright law, at the Kentucky Heritage Council, 300 Washington Street, Frankfort, Kentucky 40601, Monday through Friday, 9 a.m. to 4 p.m.

CRAIG A. POTTS, Executive Director

APPROVED BY AGENCY: October 3, 2014

FILED WITH LRC: November 3, 2014 at 2 p.m.

CONTACT PERSON: Peggy D. Guier, Staff Attorney, Kentucky Heritage Council, 300 Washington Street, Frankfort, Kentucky 40601, phone (502) 564-7005, ext. 129, fax (502) 564-5280.

TOURISM, ARTS AND HERITAGE CABINET
Kentucky Department of Fish and Wildlife Resources
(As Amended at ARRS, December 9, 2014)

301 KAR 1:015. Boat and motor restrictions.

RELATES TO: KRS[~~235.010(4),~~] 150.090, 150.625, 150.990, 235.010(4), 235.990

STATUTORY AUTHORITY: KRS 150.620, 235.280

NECESSITY, FUNCTION, AND CONFORMITY: KRS 150.620 authorizes the department to promulgate administrative regulations governing lands and waters ***the department***[~~***it***~~] has acquired. KRS 235.280 authorizes the department to promulgate administrative

regulations to govern the fair, reasonable, equitable, and safe use of all waters of this state. This administrative regulation limits the size of boats and motors on small lakes for safety reasons and to minimize interference with other users.

Section 1. Definition. "Idle speed" means the slowest possible speed at which maneuverability can be maintained.

Section 2. (1) A person shall not operate on ***a lake[~~the lakes~~]*** listed in subsection (2) of this section***, a***:

(a) ***[~~A~~]***House boat;

(b) ***[~~A~~]***Monohull boat with a center line length exceeding twenty-two (22) feet; or

(c) ***[~~A~~]***Pontoon boat with a float or decking exceeding twenty-two (22) feet, except for:

1. Guist Creek Lake, where a pontoon boat with a float or decking up to twenty-four (24) feet may be operated; or

2. In ***a lake established in clauses a. through c. of this subparagraph[~~the following lakes~~]***, where a pontoon boat with a float or decking up to thirty (30) feet may be operated:

a. Cedar Creek Lake;

b. Lake Beshear; or

c. Lake Malone.

(2) List of lakes:

(a) Arrowhead Slough, Ballard County;
(b) Beaver Creek Lake, Anderson County;
(c) Beaver Dam Slough, Ballard County;
(d) Bert Combs Lake, Clay County;
(e) Big Turner Lake, Ballard County;
(f) Boltz Lake, Grant County;
(g) Briggs Lake, Logan County;
(h) Bullock Pen Lake, Grant County;
(i) Burnt Pond, Ballard County;
(j) Burnt Slough, Ballard County;
(k) Butler Lake, Ballard County;
(l) Carnico Lake, Nicholas County;
(m) Carpenter Lake, Daviess County;
(n) Carter Caves Lake, Carter County;
(o) Cedar Creek Lake, Lincoln County;
(p) Corinth Lake, Grant County;
(q) Cross Slough, Ballard County;
(r) Cypress Slough, Ballard County;
(s) Deep Slough, Ballard County;
(t) Dennie Gooch Lake, Pulaski County;
(u) Elmer Davis Lake, Owen County;
(v) Fishpond Lake, Letcher County;
(w) Goose Lake, Muhlenberg County;
(x) Greenbo Lake, Greenup County;
(y) Guist Creek Lake, Shelby County;
(z) Happy Hollow Lake, Ballard County;
(aa) Island Lake, Ohio County;
(bb) Kincaid Lake, Pendleton County;
(cc) Kingdom Come Lake, Harlan County;
(dd) Kingfisher Lakes, Daviess County;
(ee) Lake Beshear, Caldwell County;
(ff) Lake Chumley, Lincoln County;
(gg) Lake Malone, Muhlenberg County;
(hh) Lake Mauzy, Union County;
(ii) Lake Reba, Madison County;
(jj) Lake Washburn, Ohio County;
(kk) Lebanon City Lake, Marion County;
(ll) Lincoln Homestead Lake, Washington County;
(mm) Little Green Sea, Ballard County;
(nn) Little Turner Lake, Ballard County;
(oo) Long Pond, Ballard County;
(pp) Marion County Lake, Marion County;
(qq) Martin County Lake, Martin County;
(rr) McNeely Lake, Jefferson County;
(ss) Metcalfe County Lake, Metcalfe County;
(tt) Mill Creek Lake, Wolfe County;
(uu) Mitchell Lake, Ballard County;
(vv) Pan Bowl Lake, Breathitt County;
(ww) Pikeville City Lake, Pike County;
(xx) Sandy Slough, Ballard County;
(yy) Shanty Hollow Lake, Warren County;
(zz) Shelby Lake, Ballard County;
(aaa) South Lake, Ohio County;
(bbb) Spurlington Lake, Taylor County;
(ccc) Swan Lake, Ballard County;
(ddd) Twin Pockets Slough, Ballard County; ***or***
(eee) Wilgreen Lake, Madison County.

(3) Length restrictions in this section shall not apply to a canoe.

(4) A person shall not operate a ***"***personal watercraft***"*** as defined in KRS 235.010(4) on Cedar Creek Lake.

Section 3.[~~2.~~] (1) A person shall not operate ***a boat***:

(a) ***[~~A boat~~]***Motor without an underwater exhaust; or

(b) ***[~~A boat~~]***Faster than idle speed ***while[~~when~~]*** passing a boat with an occupant actively engaged in fishing, except in a designated skiing zone.

(2) The requirements in subsection (1) of this section shall apply on:

(a) Beaver Lake, Anderson County;
(b) Boltz Lake, Grant County;
(c) Bullock Pen Lake, Grant County;
(d) Carnico Lake, Nicholas County;
(e) Cedar Creek Lake; Lincoln County;
(f) Corinth Lake, Grant County;
(g) Elmer Davis Lake, Owen County;
(h) Greenbo Lake, Owen County;
(i) Guist Creek Lake, Shelby County;
(j) Kincaid Lake, Pendleton County;
(k) Lake Beshear, Caldwell County;
(l) Lake Malone, Muhlenburg County;
(m) Pan Bowl Lake, Breathitt County;
(n) Shanty Hollow Lake, Warren County;
(o) Swan Lake, Ballard County; and
(p) Wilgreen Lake, Madison County.

Section 4.[~~3.~~] A person shall not operate an electric or an internal combustion boat motor on:

(1) Dennie Gooch Lake, Pulaski County;
(2) Kingdom Come Lake, Harlan County; ***or[~~and~~]***
(3) Lake Chumley, Lincoln County.

Section 5.[~~4.~~] A person shall not operate an internal combustion boat motor and shall only be allowed to use an electric trolling motor on:

(1) Arrowhead Slough, Ballard County;
(2) Beaver Dam Slough, Ballard County;
(3) Bert Combs Lake, Clay County;
(4) Big Turner Lake, Ballard County;
(5) Briggs Lake, Logan County;
(6) Burnt Pond, Ballard County;
(7) Burnt Slough, Ballard County;
(8) Butler, Ballard County;
(9) Carpenter Lake, Daviess County;
(10) Carter Caves Lake, Carter County;
(11) Cross Slough, Ballard County;
(12) Cypress Slough, Ballard County;
(13) Deep Slough, Ballard County;
(14) Fishpond Lake, Letcher County;
(15) Happy Hollow Lake, Ballard County;
(16) Kingfisher Lake, Daviess County;
(17) Lake Mauzy, Union County;
(18) Lake Reba, Madison County;
(19) Lake Washburn, Ohio County;
(20) Lebanon City Lake, Marion County;
(21) Lincoln Homestead Lake, Washington County;
(22) Little Green Sea, Ballard County;
(23) Little Turner Lake, Ballard County;
(24) Long Pond, Ballard County;
(25) Marion County Lake, Marion County;
(26) Martin County Lake, Martin County;
(27) McNeely Lake, Jefferson County;
(28) Metcalfe County Lake, Metcalfe County;

(29) Mill Creek Lake, Wolfe County;
(30) Mitchell Lake, Ballard County;
(31) Pikeville City Lake, Pike County;
(32) Sandy Slough, Ballard County;
(33) Shelby Lake, Ballard County;
(34) Spurlington Lake, Taylor County; ***or[~~and~~]***
(35) Twin Pockets Slough, Ballard County.

[~~Section 5. On the following lakes, a person shall not operate a boat motor larger than ten (10) horsepower:~~
~~(1) Beaver Lake, Anderson County;~~
~~(2) Boltz Lake, Grant County;~~
~~(3) Bullock Pen Lake, Grant County;~~
~~(4) Corinth Lake, Grant County;~~
~~(5) Elmer Davis Lake, Owen County;~~
~~(6) Kincaid Lake, Pendleton County;~~
~~(7) Shanty Hollow Lake, Warren County; and~~
~~(8) Swan Lake, Ballard County.~~]

Section 6. A person shall not operate a motorboat faster than idle speed on:
(1) Carnico Lake, Nicholas County;
(2) Goose Lake, Muhlenberg County;
(3) Greenbo Lake, Greenup County;
(4) Island Lake, Ohio County;
(5) South Lake, Ohio County;
(6) Pan Bowl Lake, Breathitt County; ***or[~~and~~]***
(7) Wilgreen Lake, Madison County.

Section 7. A person operating a boat motor greater[~~larger~~] than ten (10) horsepower shall not exceed idle speed***[at any time]*** on***[~~the following lakes~~]***:
(1) Beaver Lake, Anderson County;
(2) Boltz Lake, Grant County;
(3) Bullock Pen Lake, Grant County:
(4) Corinth Lake, Grant County;
(5) Elmer Davis Lake, Owen County;
(6) Herb Smith/Cranks Creek Lake, Harlan County;
(7) Kincaid Lake, Pendleton County;
(8) Martins Fork Lake, Harlan County;
(9) Shanty Hollow Lake, Warren County; ***or[~~and~~]***
(10) Swan Lake, Ballard County[~~(1) Herb Smith/Cranks Creek Lake; and (2) Martins Fork Lake~~].

KAREN WALDROP, Deputy Commissioner,
For GREGORY K. JOHNSON, Commissioner
ROBERT H. STEWART, Secretary
APPROVED BY AGENCY: October 13, 2014
FILED WITH LRC: October 14, 2014 at 4 p.m.
CONTACT PERSON: Rose Mack, Department of Fish and Wildlife Resources, Arnold L. Mitchell Building, #1 Sportsman's Lane, Frankfort, Kentucky 40601, phone (502) 564-3400, fax (502) 564-9136, email fwpubliccomments@ky.gov.

TOURISM, ARTS AND HERITAGE CABINET
Kentucky Department of Fish and Wildlife Resources
(As Amended at ARRS, December 9, 2014)

301 KAR 2:140. Requirements for wild turkey hunting.

RELATES TO: KRS 150.010,[~~150.092,~~] 150.170[~~(3)~~], 150.175, 150.305, 150.360,[~~150.365, 150.390(1),~~] 150.990[~~(11)~~]
STATUTORY AUTHORITY: KRS 150.025(1), 150.390(1)
NECESSITY, FUNCTION, AND CONFORMITY: KRS 150.025(1) authorizes the department to promulgate administrative regulations to establish open seasons for the taking of wildlife, to regulate bag limits and methods of take, and to make such requirements apply to a limited area. KRS 150.390(1) ***requires that[~~prohibits the taking of~~]***[governing] wild turkeys ***shall not be taken*** in any manner contrary to any provisions of KRS Chapter 150 or ***Title 301 KAR[~~its administrative regulations~~]***[~~turkey hunting~~]. This administrative regulation establishes legal methods of take and checking and recording requirements[~~procedures~~] for[~~hunting~~] wild turkey hunting[~~to assure the continued protection and conservation of wild turkey populations, and a permanent and continued supply for present and future residents of the state~~].

Section 1. Definitions. (1) "Baited area" means an area where feed, grains***,*** or other substances capable of luring wild turkeys have been placed.
(2) "Crossbow" means a bow capable of holding an arrow at full or partial draw without human aid.
(3) ***"Fall turkey permit" means a permit that, in conjunction with appropriate licenses, seasons, and methods, allows a hunter to harvest up to the fall season bag limit of turkeys.***
(4) "Junior turkey permit" means a permit that, in conjunction with appropriate licenses, seasons, and methods, allows a youth hunter to harvest one (1) turkey during a license year.
(5) "Spring turkey permit" means a permit that, in conjunction with appropriate licenses, seasons, and methods, allows a hunter to harvest up to the spring season bag limit of turkeys.
(6) "Youth" means a person under the age of sixteen (16) by the day of the hunt.

Section 2. Wild Turkey Season Dates and Bag Limits. ***(1)*** A person shall only[~~not~~] take a wild turkey[~~(1) Except on the dates and~~] during the seasons established in[~~times specified in~~]:
(a)[~~(1)~~][~~(a)~~] 301 KAR 2:142;
(b)[~~(2)~~][~~(b)~~] 301 KAR 2:144; and
(c)[~~(3)~~][~~(c)~~] 301 KAR 2:111[~~; or (2) By means other than those specified in this administrative regulation~~].
(2) A person shall not harvest more than the established bag limits, pursuant to:
(a) 301 KAR 2:142;
(b) 301 KAR 2:144; and
(c) 301 KAR 2:111.

Section 3. License and Wild Turkey Permit Requirements. Unless exempted by KRS 150.170[~~(3)~~], a person hunting a wild turkey shall possess proof of purchase of a valid Kentucky hunting license and[~~a person hunting a wild turkey shall possess~~] a ***valid***:
(1) ***[~~Valid~~]***Spring turkey[~~hunting~~] permit during the spring season;***[~~or~~]***
(2) ***[~~Valid~~]***Fall turkey[~~archery hunting~~] permit during a[~~the~~] fall[~~archery~~] season***; or***
(3) Junior turkey permit, if applicable[~~; or (3) Fall turkey gun hunting permit if hunting with a firearm or crossbow during the fall gun season~~].

Section 4. Harvest Recording. (1)***(a)***[~~An adult shall accompany and maintain control of a person under sixteen (16) years of age turkey hunting with a firearm. (2)~~] Immediately after harvesting[~~taking~~] a wild turkey, and prior to moving the carcass, a person shall[~~: (a)~~] record[~~,~~] in writing ***on one (1) of the items established in paragraph (b) of this subsection, the:***
1.[~~the: (a)~~][~~, the~~] Species[~~, date~~] taken;
2.[~~(b)~~] Date taken;
3.[~~(c)~~][~~,~~] County where taken; and
4.[~~(d)~~][~~, and~~] Sex of the wild turkey.
(b) A person who has harvested a turkey shall record the information established in paragraph (a) of this subsection[bird before moving the carcass from the site where]***[~~taken~~]***[~~. This information shall be logged and registered~~] on[~~one (1) of the following~~]:
1. The hunter's log section on the reverse side of a license or permit;
2. ***[~~The hunter's log produced in a hunting guide;~~***
~~3.~~]A hunter's log printed from the Internet;
3.[~~4.~~] A hunter's log available from any KDSS agent; or
4.[~~5.~~] An index or similar card.
(2) A person shall[~~or reasonable facsimile thereof; and (b)~~] retain and possess the completed hunter's log while the person is in[~~his possession whenever the hunter is in~~] the field during the

current hunting season.

Section 5. Checking a Wild Turkey. (1)[(3)] A person shall check a harvested wild turkey by:

(a) Completing[Calling 1-877-245-4263] the telecheck process after calling (800) 245-4263 or completing the check-in process on the department's Web site at fw.ky.gov:

1. Before midnight on the day the wild turkey is recovered[harvested]; and

2. Prior to processing[(b) Providing] the carcass[information requested by the automated check-in system]; and

(b)[(c)] Writing the check-in authorization number[given by the system] on the hunter's log as established[described] in Section 4 of this administrative regulation.

(2)[(4)] A person shall:

(a) Not knowingly provide false information ***in[when]*** completing the hunter's log, checking a wild turkey, or creating a carcass tag; or

(b) Check a wild turkey before transporting it out of Kentucky.

(3)[(5) A person taking a turkey on a Wildlife Management Area shall follow the tagging and checking requirements in 301 KAR 2:142 and 301 KAR 2:111.

(6)] If a hunter transfers possession of a harvested wild turkey [leaves the possession of a hunter], the hunter shall attach to the carcass a hand-made tag[,] ***containing[which contains the information established in paragraphs (a) through (c) of this subsection]***:

(a) A valid confirmation number;

(b) The[,] hunter's name;[,] and

(c) The hunter's telephone[a phone] number[, to the carcass].

Section 6. Weapon ***and Ammunition*** Restrictions.[5. Firearms and Archery Equipment.] (1) A person[hunting wild turkey] shall only[not] use ***for the purpose of taking[the weapons and ammunition established in paragraphs (a) through (c) of this subsection to take]*** a wild turkey[or carry]:

(a) A crossbow[rifle] or archery equipment loaded with a non-barbed broadhead ***that[which]*** has a minimum cutting diameter of seven-eighths (7/8) inch, whether:

1. Expandable; or

2. Non-expandable[handgun]; ***or***

(b)***1.*** A .410 shotgun or larger, but no larger than a ten (10) gauge shotgun[or smaller than twenty (20) gauge]; ***and***

2.[(c)] A shell containing shot of size no larger than number four (4).

(2) A[; (d) Shotgun slugs;

(e) A firearm during archery-only seasons;

(f) Barbed broadheads;

(g) Broadheads smaller than seven-eighths (7/8) inch wide;

(h) Arrows with chemical treatments or attachments containing chemicals; or

(i)] crossbow shall be equipped with[without] a working safety device.[(2) A person hunting wild turkeys may use a crossbow during firearm season.]

Section 7. Hunter Restrictions[6. Baiting]. (1) A person shall not hunt wild turkeys on a baited area or by the aid of baiting:

(a) While bait is present; or

(b) For thirty (30) days after the bait has been removed.

(2) A person may hunt wild turkeys[turkey] on an area where grain, feed, or other substance exists as the result of:

(a) A bona fide agricultural practice; or

(b) Manipulating a crop for a wildlife management purpose.

(3) A field shall be considered baited if grain, feed, or other substance grown on the field is removed and later returned to the field.

(4)[Section 7. Turkey Hunting Restrictions. (1)] A person hunting wild turkeys:

(a) May use a hand or mouth-operated call; and

(b) Shall not:

1. Use a dog to aid in taking a wild turkey during the spring season;

2. Hunt from a boat;

3. Use or possess an electronic or digital calling device;

4. Use a live decoy; or

5. Harvest[Take] a roosting turkey[; or

6. Hunt with a crossbow without a working safety device].

(5) In an area open to wild turkey hunting and where wild turkeys are reasonably expected to occur,[(2)] a person shall not mimic the sound of a wild turkey from:

(a) March 1 until the opening of the youth turkey[spring] season; and

(b) The close of the youth turkey season and the opening of the statewide turkey season[in an area open to hunting if turkeys are reasonably expected to occur].

(6) ***While hunting wild turkeys, a youth with a firearm shall be accompanied by*** an adult ***who can immediately take control of the firearm[shall accompany and maintain control of a youth who is hunting wild turkeys with a firearm].***

KAREN WALDROP, Deputy Commissioner,
For GREGORY K. JOHNSON, Commissioner
ROBERT H. STEWART, Secretary

APPROVED BY AGENCY: October 13, 2014

FILED WITH LRC: October 14, 2014 at 4 p.m.

CONTACT PERSON: Rose Mack, Kentucky Department of Fish and Wildlife Resources, 1 Sportsman's Lane, Frankfort, Kentucky 40601, phone (502) 564-7109, ext. 4507 fax (502) 564-9136, email fwpubliccomments@ky.gov.

TOURISM, ARTS AND HERITAGE CABINET
Kentucky Department of Fish and Wildlife Resources
(As Amended as ARRS, December 9, 2014)

301 KAR 2:144. Fall wild turkey hunting.

RELATES TO: KRS 150.010, 150.170, 150.175[(1)(r)], 150.305, 150.360, 150.390, 150.990[(11)]

STATUTORY AUTHORITY: KRS 150.025(1), 150.390(1)[, 150.620]

NECESSITY, FUNCTION, AND CONFORMITY: KRS 150.025(1) authorizes the department to promulgate administrative regulations to establish open seasons for the taking of wildlife, to regulate bag limits and methods of take, and to make such requirements apply to a limited area. KRS 150.390(1) ***requires that[prohibits the taking of]*** wild turkeys ***shall not be taken*** in any manner contrary to any provisions of KRS Chapter 150 or ***Title 301 KAR[its administrative regulations]***. This administrative regulation establishes seasons, bag limits, hunter requirements, and special area restrictions for fall wild turkey hunting[KRS 150.025(1) and 150.390(1) authorize the department to promulgate administrative regulations governing wild turkey hunting. This administrative regulation establishes season dates, shooting hours and other requirements for fall firearm and archery turkey seasons].

Section 1. Definitions. (1) "Crossbow" means a bow capable of holding an arrow at full or partial draw without human aid.

(2) "Wildlife Management Area" or "WMA" means a tract of land:

(a) Controlled by the department through ownership, lease, license, or cooperative agreement; and

(b) That has "Wildlife Management Area" or "WMA" as part of its official name.

Section 2. Statewide Wild Turkey Season Dates[Seasons and Shooting Hours]. Except as ***established[specified]*** in 301 KAR 2:111, a person shall only take wild turkeys during the seasons established in subsections (1) through (3) of this section:

(1) Archery season shall be the first Saturday in September through the third Monday in January;[.]

(2) Crossbow season shall be:

(a) From October 1 through the end of the third full weekend in October; and

(b) From the second Saturday in November through December

31; and[.]

(3) Firearm season shall be:

(a) For seven (7) consecutive days beginning the fourth Saturday in October[for seven (7) consecutive days]; and

(b) For seven (7) consecutive days beginning the first Saturday in December[for seven (7) consecutive days].

[(4) A person may take a wild turkey from one-half (1/2) hour before sunrise until one-half (1/2) hour after sunset.]

Section 3.[2.] Legal Equipment[Weapons]. (1) A person shall only use legal weapons and ammunition as[Firearms, archery and crossbow equipment shall meet the specifications] established in 301 KAR 2:140[, Section 5].

(2)[(1)] Fall archery season. Archery equipment may be used.

(3)[(2)] Fall crossbow season. Crossbows and archery equipment may be used.

(4)[(3)] Fall firearm season. Archery equipment, crossbows, and firearms may be used.

Section 4. Wild Turkey[3.] Bag Limits. (1) A person shall not take more than [a total of] four (4) wild turkeys, no more than two (2) of which shall be taken with a firearm[with a maximum of:

(a) Two (2) wild turkeys during the fall archery and crossbow seasons; and

(b) Two (2) wild turkeys during the fall firearm season].

(2) Only one (1) of the turkeys taken pursuant to subsection (1) of this section shall have a visible beard at least three (3) inches long.

(3) A person shall not harvest more than one (1) wild turkey per day[Section 4. Hunter Orange. Wild turkey hunters shall wear hunter orange during the fall firearm deer season as established in 301 KAR 2:172, Section 4].

Section 5. Hunter Restrictions. (1)[Use of Dogs.] Dogs may be used to aid in taking wild turkeys during any fall season.

(2) A person may take a wild turkey from one-half (1/2) hour before sunrise until one-half (1/2) hour after sunset.

(3) A person hunting wild turkeys in the fall shall comply with all license, permit, and check-in requirements established in 301 KAR 2:140[turkey].

Section 6. Wildlife Management Areas. ***Except as established in subsections (1) through (6) of this section[Unless specified below]***, Wildlife Management Areas shall be open to fall wild turkey hunting ***pursuant to[under the statewide requirements specified in Sections 2 through 6]***[1 through 4]***[of]*** this administrative regulation and 301 KAR 2:140.

(1) Ballard Wildlife Management Area. A person shall not hunt wild turkeys during the fall firearm, crossbow, or archery season.

(2) Barren River Wildlife Management Area. On the Peninsula Unit, including Narrows, Goose and Grass Islands, a person:

(a) Shall not hunt during the fall firearm season with a breech-loading firearm;

(b) May use a muzzleloading shotgun[muzzleloader] or crossbow during the fall firearm season; and

(c) May use a crossbow during the fall archery season.

(3) Higginson-Henry Wildlife Management Area. A person shall not use[or possess] a firearm while turkey hunting.

(4) Pioneer Weapons Area. A person may use a crossbow during the fall archery turkey season.

(5) Main block of Robinson Forest. A person shall not hunt wild turkeys during the fall firearm, crossbow, or archery season except ***a person[persons]*** participating in a department-authorized hunt.

(6) Swan Lake Unit of Boatwright Wildlife Management Area. A person shall not hunt wild turkeys during the fall firearm, crossbow, or archery season.

Karen Waldrop, Deputy Commissioner,
For Gregory K. Johnson, Commissioner
Robert H. Stewart, Secretary

APPROVED BY AGENCY: October 13, 2014

FILED WITH LRC: October 14, 2014 at 4 p.m.

CONTACT PERSON: Rose Mack, Kentucky Department of Fish and Wildlife Resources, 1 Sportsman's Lane, Frankfort, Kentucky 40601, phone (502) 564-7109, ext. 4507, fax (502) 564-9136, email fwpubliccomments@ky.gov.

EDUCATION AND WORKFORCE DEVELOPMENT CABINET
Kentucky Board of Education
Department of Education
(As Amended at EAARS, December 10, 2014)

703 KAR 5:260. Implementation of intervention options in priority schools and districts.

RELATES TO: KRS 158.6453, 158.6455, 158.782, 160.346

STATUTORY AUTHORITY: KRS 156.029(7), 156.070(5), 158.6453, 158.6455, 160.346

NECESSITY, FUNCTION, AND CONFORMITY: KRS 156.029(7) indicates the primary function of the Kentucky Board of Education (KBE) is to adopt policies and administrative regulations by which the Kentucky Department of Education (department) shall be governed in planning and operating programs within its jurisdiction. KRS 156.070(5) requires the KBE, upon the recommendation of the Commissioner of Education, to establish policy or act on all programs, services, and other matters which are within the administrative responsibility of the department. KRS 158.6453(3)(a) vests in the KBE the responsibility to create an assessment system that measures achievement of the state learning goals, ensures compliance with Title I of the federal Elementary and Secondary Education Act of 1965 (ESEA), 20 U.S.C. sec. 6301, et seq., and ensures school accountability. KRS 158.6455 requires the KBE to create an accountability system to classify schools and districts, and to establish appropriate consequences for schools failing to meet their accountability measures. KRS 160.346 requires the KBE to promulgate administrative regulations to establish the process for implementing school interventions and alternate management options for schools, districts, and the state for persistently low-achieving schools, now identified as priority schools. Section 1003(g) of Title I of the Elementary and Secondary Education Act of 1965, as amended, (Title I***,[or]*** ESEA***, or 20 U.S.C. 6303(g)***) requires the KBE to identify the state's lowest-achieving schools (referenced in KRS 160.346 as "persistently low-achieving schools") as "priority schools", and for those priority schools to follow the requirements of 20 U.S.C. 6303(g) regarding school intervention options. This administrative regulation establishes the process and procedures for implementing school interventions and alternate governance options for priority schools and districts.

Section 1. Definitions. (1) "Annual measurable objective" or "AMO" "means the improvement goal for each school or district calculated from the overall score.

(2) "Diagnostic review process" means the review and audit process required under KRS 158.6455 and 160.346 to establish appropriate consequences for districts containing priority schools, priority districts, and priority schools.

(3) "Diagnostic review team" means an audit team approved by the Commissioner of Education or his or her designee to conduct a school or district diagnostic review required by KRS 160.346.

(4) "District diagnostic review" means an assessment ***that:***

(a) Reviews[of] the functioning of the district and***[of]*** the district's ability to manage an intervention in a priority school***;*** and

(b) Meets the requirements of KRS 160.346(3)(b).

(5) "District that contains a priority school" means a district that has not been identified as a priority district but that has in its jurisdiction one (1) or more priority schools.

(6) "Persistently low-achieving school" is defined by KRS 160.346(1)(a).

(7) "Priority district" ***means a district that has an overall score in the bottom five (5) percent of overall scores for all districts that have failed to meet the AMO for the last three (3) consecutive years.***

(8) "Priority school" means a school that has an overall score in the bottom five (5) percent of overall scores by level

for all schools that have failed to meet the AMO for the last three (3) consecutive years[is defined by 703 KAR 5:225, Section 1(21).

(8) "Priority school" is defined by 703 KAR 5:225, Section 1(22)].

(9) "School diagnostic review"***[is described in KRS 160.346, and]*** means an assessment ***that:***

(a) Reviews[of] the functioning of ***a[the]*** school***;[,]*** and

(b) Meets the requirements of KRS 160.346(3)(a).

(10) "School intervention" is defined by KRS 160.346(1)(b).

Section 2. Diagnostic Review Team Selection and Membership. (1)(a) Members of the diagnostic review team shall be selected from qualified applicants by the department, and approved by the Commissioner of Education or his or her designee.

(b) The team members shall complete department-provided or approved training in any areas needed to effectively perform their duties.

(c) Members shall hold appropriate certification or qualifications for the position being represented.

(d) The team shall not include any members currently employed by the district or school under review.

(2) The team shall***[be approved by the Commissioner of Education or his or her designee and shall]*** include the following representation:

(a) The chairperson, who shall be designated by the department or its designee, and shall be:

1. A certified administrator approved by the department to provide highly skilled education assistance as required by KRS 158.782;

2. A certified administrator member of the review team; or

3. A similarly qualified professional approved by the department;

(b) An individual approved by the department to provide highly skilled education assistance as required by KRS 158.782;

(c) A teacher who is actively teaching or has taught within the last three (3) years;

(d) A principal who is currently serving or has served as a principal within the last three (3) years;

(e) A district level administrator who is currently serving or has served in a district administrative position within the last three (3) years;

(f) A parent or legal guardian who has or has had a school-aged child; and

(g) A university representative who is currently serving or has served in that capacity within the last three (3) years.

(3) The chair may serve in addition to the six (6) members outlined in subsection (2)(b) through (g) of this section, or may be selected from those six (6) members who also meet the qualifications of subsection (1)(a) of this section.

Section 3. School Diagnostic Review. (1) Within ninety (90) days of identification as a priority school by the department, a school diagnostic review shall be scheduled to review the functioning of the school council and the specific leadership capacity of the principal.

(2) The determination of the principal and school based decision-making council's ability to lead the intervention in the school shall be based upon an assessment of whether:

(a) The principal and council demonstrate maintenance and communication of a visionary purpose and direction committed to high expectations for learning as well as shared values and beliefs about teaching and learning;

(b) The principal and council lead and operate the school under a governance and leadership style that promotes and supports student performance and system effectiveness;

(c) The principal and council establish a data-driven system for curriculum, instructional design, and delivery, ensuring both teacher effectiveness and student achievement;

(d) The principal and council ensure that systems are in place for collection and use of data;

(e) The principal and council ensure that systems are in place to allocate human and fiscal resources to support improvement and ensure success for all students; and

(f) The principal and council ensure that the school implements a comprehensive assessment system that generates a range of data about student learning and system effectiveness and uses the results to guide continuous improvement.

(3) The school diagnostic review shall include:

(a) Analysis of state and local education data;

(b) Review of comprehensive school improvement plans and other planning documents;

(c) Interviews with students, parents, all school council members, school and district personnel, and community members;

(d) Direct observation;

(e) Administration of teacher and principal working conditions surveys and student satisfaction surveys;

(f) Review of school council minutes and agendas;

(g) Administration of the Missing Piece of the Proficiency Puzzle, June 2007; and

(h) Other methods that may be required to obtain necessary information.

(4) Following the review, a report shall be submitted to the Commissioner of Education that specifically makes:

(a) A determination of the capacity of a principal and school council to lead an intervention option in a priority school;

(b) A recommendation by the diagnostic review team as to whether the principal has capacity to lead the school to recovery, or should be replaced; and

(c) A recommendation by the diagnostic review team as to whether the school council has capacity to lead the school to recovery or whether school council authority should be transferred.

(5)***(a)*** If the school council is determined to have leadership capacity, it shall retain its authority**.**

(b)[; however,] If the school council is determined not to have leadership capacity, the council shall either remain as an advisory council or be replaced by the Commissioner of Education.

(6) Following the initial diagnostic review process, a review shall be repeated at least once every two (2) years or as often as the commissioner deems necessary.

(7) Pursuant to KRS 160.346(8), the authority of the school council shall be restored if the school is not classified as persistently low-achieving **for two (2) consecutive years.**

(8) The Commissioner of Education shall notify a school or district that it has exited priority status ***if[when]*** the school:

(a) Meets AMO goals for three (3) consecutive years;

(b) Is no longer identified by KRS 160.346(1)(a)'s applicable percent calculation of being in the lowest five (5) percent; and

(c) Scores at or above ***the[a seventy (70) percent]*** graduation rate ***goals as required by 703 KAR 5:225[for three (3) consecutive years]***.

Section 4. District Diagnostic Review. (1) Within ninety (90) days of identification by the department of a district containing a priority school, or of a priority district, a district diagnostic review shall be scheduled to review the functioning of the district administration and its specific leadership capacity related to each identified priority school.

(2) The determination of the district's level of functioning and ability to manage the intervention in the priority school shall be based upon an assessment of capacity in the following areas:

(a) The district demonstrates maintenance and communication of a visionary purpose and direction committed to high expectations for learning as well as shared values and beliefs about teaching and learning;

(b) The district leads and operates the school district under a governance and leadership style that promotes and supports student performance and system effectiveness;

(c) The district establishes a data-driven system for curriculum, instructional design, and delivery, ensuring both teacher effectiveness and student achievement;

(d) The district ensures that systems are in place for collection and use of data;

(e) The district ensures that systems are in place to allocate human and fiscal resources to support improvement and ensure

success for all students; and

(f) The district ensures that a comprehensive assessment system, which generates a range of data about student learning and system effectiveness and uses the results to guide continuous improvement, is implemented.

(3) The district diagnostic review shall include:

(a) Analysis of state and local education data;

(b) Review of school board minutes;

(c) Review of comprehensive district improvement plans and other planning documents;

(d) Interviews with school board members, students, parents, school and district personnel, and community members;

(e) Direct observation;

(f) Administration of teacher and principal working conditions surveys and student satisfaction surveys;

(g) Administration of the Missing Piece of the Proficiency Puzzle, June 2007; and

(h) Other methods that may be required to obtain necessary information.

(4) Following the review, a report shall be submitted to the Commissioner of Education that specifically makes a recommendation regarding the district's level of functioning and whether the district has the capability and capacity to manage the intervention in each identified school.

(5) There shall be only one (1) district diagnostic review per district, per year, regardless of the number of priority schools located in the district.

(6) A ***school or district*** review shall be repeated every two (2) years or as often as the Commissioner of Education deems necessary.

Section 5. Notification to Schools and Districts of Diagnostic Review Determination. (1) After completion of the district diagnostic review and within the deadline set in KRS 160.346(4), the Commissioner of Education shall notify in writing the school council, principal, superintendent, and local board of education of the determination regarding:

(a) School council leadership capacity and authority to manage the intervention in a priority school;

(b) Principal leadership capacity and authority; and

(c) District leadership capacity and authority.

(2) The notification shall include a statement of the appeal process to the KBE provided in KRS 160.346(5). The Commissioner of Education shall make the final report publicly available.

Section 6. Authority to Select an Intervention Option. (1)***(a) The school council shall, within thirty (30) days after the receipt of the final determination and pursuant to KRS 160.346, choose an intervention option and develop an action plan*** if the final determinations in the diagnostic reviews are that:

1.~~(a)~~ The school council has sufficient capacity to manage the intervention***;***~~[,]~~ and

2.~~(b)~~ The district has the capacity to support the intervention~~[, the school council shall, within thirty (30) days after the receipt of the final determination and pursuant to KRS 160.346, choose an intervention option and develop an action plan]~~.

(b) The council shall present the option and plan to the local board of education, which shall give final approval and provide the necessary support and resources for the intervention effort.

(2)***(a) The superintendent shall, within forty-five (45) days after the receipt of the Commissioner of Education's notification or thirty (30) days after the action of the KBE if an appeal is filed, make a recommendation for an intervention option*** if the final determinations in the diagnostic reviews are that:

1.~~(a)~~ The school council does not have sufficient capacity to manage the intervention and is recommended to become advisory***;***~~[,]~~ and

2.~~(b)~~ The district has sufficient capacity to support the intervention and council authority is recommended to be transferred to the superintendent***.***

(b) The superintendent shall~~[, then the superintendent shall, within forty-five (45) days after the receipt of the Commissioner of Education's notification or thirty (30) days after the action of the KBE if an appeal is filed, make a recommendation for an intervention option and]~~ submit the choice to the local board of education, which shall make the final determination on the intervention option.

(3)***(a) The school council shall, within thirty (30) days after the receipt of the Commissioner of Education's notification or thirty (30) days after the action of the KBE if an appeal is filed, choose the intervention option*** if the final determinations in the diagnostic reviews are that:

1.~~(a)~~ The school council has sufficient capacity to manage the intervention***;***~~[,]~~ and

2.~~(b)~~ The district does not have the capacity to support the intervention***.***

(b) The school council shall~~[, then the school council shall, within thirty (30) days after the receipt of the Commissioner of Education's notification or thirty (30) days after the action of the KBE if an appeal is filed, choose the intervention option and]~~ submit its choice to the local board of education, which shall review the option chosen by the school council and submit the choice to the Commissioner of Education, who shall approve the choice.

(4)***(a) The Commissioner of Education shall, within forty-five (45) days after receipt of the determinations specified in this paragraph and in consultation with the advisory school council, superintendent, and local board of education, determine the intervention option*** if the final determinations in the diagnostic reviews are that:

1.~~(a)~~ The school council does not have sufficient capacity to manage the intervention and is recommended to become advisory***;***~~[,]~~ and

2.~~(b)~~ The district lacks sufficient capacity to support the intervention and council authority is recommended to be transferred to the Commissioner of Education~~[, then the Commissioner of Education shall, within forty-five (45) days after receipt of these determinations and in consultation with the advisory school council, superintendent, and local board of education, determine the intervention option]~~.

(b) The identified school and local district shall implement the intervention option with support from the department.

School council has capacity to lead the intervention	District has capacity to lead the intervention	Choice of intervention option
Yes	Yes	School council chooses option and develops action plan, which is submitted to board, board approves and provides necessary support.
No	Yes	Superintendent recommends to local board, board has final approval.
Yes	No	School council chooses option, submits to board, board reviews and submits to Commissioner of Education, Commissioner of Education approves.
No	No	Commissioner of Education chooses option in consultation with advisory school council, superintendent, and local board. School and district implement option with department support.

Section 7. Replacement of School Council Members by the Commissioner of Education. (1) When the Commissioner of Education is required to appoint advisory school council members to serve until the requirements of KRS 160.346(8) are met, the Commissioner of Education shall include three (3) teachers and two (2) parents from the school. These members may be

appointed from a list of nominees submitted by the superintendent.

(2) The Commissioner of Education shall select candidates who are capable of providing leadership in the turnaround environment of the school and meet the requirements of KRS 160.345.

(3) The commissioner shall fill any subsequent vacancy through this procedure, until full authority is restored to the school council.

Section 8. Implementation of Intervention Options. (1) A school or district engaging in the re-staffing option shall:

(a) Replace the principal, ***if[~~when~~]*** required by KRS 160.346(9)(b), with a certified principal who has specific training in turning around low-achieving schools and grant the new principal sufficient operational flexibility, including staffing, calendars, time, and budgeting, to fully implement a comprehensive approach to substantially improve student achievement outcomes and, if a high school, increase high school graduation rates;

(b) Replace the school council, ***if[~~when~~]*** required by KRS 160.346(9)(b), with individuals appointed by the Commissioner of Education pursuant to Section 7 of this administrative regulation;

(c) Use competencies adopted by the local board of education to measure the effectiveness of staff who can work within the turnaround environment to meet the needs of students when screening the existing staff, rehiring no more than fifty (50) percent of those staff, and selecting new staff as required by KRS 160.346(9)(b);

(d) Implement strategies, including more flexible working conditions, that are designed to increase opportunities for career growth and are designed to recruit, place, and retain staff with the skills necessary to meet the needs of the students in the priority school;

(e) Provide staff with ongoing, high-quality, job-embedded professional development that is aligned with the school's comprehensive instructional program and designed with school staff to ensure that they are equipped to facilitate effective teaching and learning and have the capacity to successfully implement intervention strategies;

(f) Adopt a new governance structure which shall include requiring the school to provide quarterly progress reports to the local board of education and the department;

(g) Use data to identify and implement an instructional program that is research-based and aligned from one (1) grade to the next as well as aligned with the Kentucky Core Academic Standards established in 704 KAR 3:303;

(h) Promote the continuous use of student data from formative, interim, and summative assessments to inform and differentiate instruction in order to meet the academic needs of individual students;

(i) Establish schedules and implement strategies that provide increased learning time; and

(j) Provide appropriate social, emotional, and community-oriented services and supports for students.

(2) A school or district engaging in the external management option shall:

(a) Choose an external management organization (EMO) from a list of approved EMOs established by the KBE pursuant to Section 9 of this administrative regulation;

(b) Contract with the EMO to provide day-to-day management of the school; and

(c) Provide quarterly progress reports to the local board of education and the department.

(3) A school or district engaging in the transformation option shall:

(a) Replace the principal, ***if[~~when~~]*** required by KRS 160.346(9)(d), with a certified principal who has specific training in turning around low-achieving schools;

(b) Replace the school council, ***if[~~when~~]*** required by KRS 160.346(9)(d), with individuals appointed by the Commissioner of Education pursuant to Section 7 of this administrative regulation;

(c) Use rigorous, transparent, and equitable evaluation systems for teachers and principals that:

1. Take into account data on student growth as a significant factor as well as other factors such as multiple observation-based assessments of performance and ongoing collections of professional practice reflective of student achievement and increased high school graduations rates; and

2. Are designed and developed with teacher and principal involvement;

(d) Identify and provide additional leadership and compensation opportunities to school leaders, teachers, and other staff who have increased student achievement and high school graduation rates, if applicable, and identify and remove those who, after ample opportunities have been provided for them to improve their professional practice, have not done so;

(e) Provide staff with ongoing, high-quality, job-embedded professional development that is aligned with the school's comprehensive instructional program and designed in conjunction with school staff to ensure they are equipped to facilitate effective teaching and learning and have the capacity to successfully implement school reform strategies which shall include:

1. Subject-specific pedagogy;

2. Instruction that reflects a deeper understanding of the community served by the school; and

3. Differentiated instruction;

(f) Implement strategies designed to increase opportunities for career growth which shall include more flexible working conditions designed to recruit, place, and retain staff with the skills necessary to meet the needs of the students in a transformation school;

(g) Use data to identify and implement an instructional program that is research-based and aligned from one (1) grade to the next as well as aligned with the Kentucky Core Academic Standards as established in 704 KAR 3:303;

(h) Promote the continuous use of student data from formative, interim, and summative assessments to inform and differentiate instruction in order to meet the academic needs of individual students;

(i) Increase learning time and create community-oriented schools that:

1. Establish schedules and implement strategies that provide increased learning time; and

2. Provide ongoing mechanisms for family and community engagement;

(j) Provide operational flexibility and sustained support that:

1. Gives the school sufficient operational flexibility, including staffing, calendar, time, and budgeting to fully implement a comprehensive approach to substantially improve student achievement outcomes and increase high school graduation rates; and

2. Ensures that the school participates in ongoing, intensive technical assistance and related support from the local district and the state; and

(k) Provide quarterly progress reports to the local board of education and the department.

(4) A school or district engaging in the school closure option shall develop a plan for the closure of the school. The plan shall include:

(a) A process for the transfer of students to higher performing schools in the district;

(b) A determination by the local board of education regarding staff assignments and the use of the existing facility and other assets;

(c) A method for monitoring the progress of students in their new school environment; and

(d) A quarterly progress report to the local board of education and the department.

Section 9. Establishment of Approved External Management Organizations. (1) The list of approved external management organizations (EMOs) shall be created by the Commissioner of Education following the application process established in subsection (2) of this section.

(2) The Commissioner of Education shall issue a request for information to solicit EMO applicants who shall detail the scope of the services they are able to provide to a priority school. The request for information shall require the following information

regarding the EMO applicant's qualifications:

(a) The ability of the EMO to staff the school, during the period of the EMO contract, with dynamic leadership with experience in turning around low-achieving schools;

(b) The ability of the EMO to conduct a needs assessment in the school and develop a plan of action based on the needs assessment;

(c) The ability of the EMO to deliver a comprehensive list of services designed to turn around the school;

(d) The ability of the EMO to screen staff and make decisions on staff assignments;

(e) The familiarity of the EMO with Kentucky education statutes and administrative regulations;

(f) The experience***, demonstrated in other schools or states,*** of the EMO in turning around low-achieving schools;

(g) References from other low-achieving schools or school districts supporting the EMO's ability to turn around low-achieving schools;

(h) Evidence provided by the EMO that its provision of services includes instructional leadership, professional learning support for teachers and other staff, and services to families and community stakeholders;

(i) Evidence of the EMO's financial stability, any pending or threatened litigation, and liability insurance coverage; and

(j) Other information required pursuant to KRS Chapter 45A.

(3) The Commissioner of Education shall review all responses and determine which applicants meet the criteria in subsection (2) of this section. The qualifying applicants shall be submitted to the KBE for approval. The list of approved EMOs shall be made public upon approval by the KBE.

Section 10. Incorporation by Reference. (1) "The Missing Piece of the Proficiency Puzzle, June 2007", is incorporated by reference.

(2) This material may be inspected, copied, or obtained, subject to applicable copyright law, at the Kentucky Department of Education, Office of Next Generation Schools and Districts, 8th Floor, Capital Plaza Tower, Frankfort, Kentucky 40601, Monday through Friday, 8 a.m. to 4:30 p.m.

This is to certify that the chief state school officer has reviewed and recommended this administrative regulation prior to its adoption by the Kentucky Board of Education, as required by KRS 156.070(5).

TERRY HOLLIDAY, Ph.D., Commissioner of Education
ROGER L. MARCUM, Chairperson

APPROVED BY AGENCY: August 15, 2014

FILED WITH LRC: August 15, 2014 at 11 a.m.

CONTACT PERSON: Kevin C. Brown, Associate Commissioner and General Counsel, Kentucky Department of Education, 500 Mero Street, First Floor, Capital Plaza Tower, Frankfort, Kentucky 40601, phone 502-564-4474, fax 502-564-9321.

LABOR CABINET
(As Amended at ARRS, December 9, 2014)

803 KAR 1:010. Registration of apprenticeship programs.

RELATES TO: KRS Chapter 343

STATUTORY AUTHORITY: KRS 343.020

NECESSITY, FUNCTION, AND CONFORMITY: KRS 343.020 authorizes the commissioner[~~executive director~~] with the aid of the Apprenticeship and Training Council to promulgate administrative regulations to carry out the provisions and purposes of KRS Chapter 343. This administrative regulation establishes labor standards to safeguard the welfare of apprentices, promote apprenticeship opportunities, and to extend the application of those standards by prescribing policies and procedures concerning the registration of acceptable apprenticeship programs with the Kentucky Department[~~Office~~] of Workplace Standards, Supervisor of Apprenticeship and Training. These labor standards cover the registration, cancellation, and deregistration of apprenticeship programs and of apprenticeship agreements.

Section 1. Definitions. (1) "Apprentice" is defined by KRS 343.010(1).

(2) "Apprenticeship agreement" is defined by KRS 343.010(2).

(3) "Apprenticeship program" is defined by KRS 343.010(7).

(4) "Commissioner" is defined by KRS ***343.010[~~343.101~~]***(3)[~~"Bureau" means the Bureau of Apprenticeship and Training, Employment and Training Administration, United States Department of Labor~~].

(5) "Council" is defined by KRS 343.010(4).

(6) "Employer" is defined by KRS 343.010(10).

(7)[~~"Executive director" is defined by KRS 343.101(3)~~

~~(8)~~] "Joint apprenticeship committee" means a committee, composed of an equal number of representatives of employers and employees, which has been established by an employer or group of employers and a bona fide collective bargaining agent or agents to conduct, operate, or administer an apprenticeship program and enter into apprenticeship agreements with apprentices selected for employment under the particular program.

(8)[~~(9)~~] "Nonjoint apprenticeship ***program*** sponsor" means an apprenticeship program sponsor in which a bona fide collective bargaining agent does not participate, such as:

(a) An individual nonjoint sponsor, i.e., an apprenticeship program sponsored by one (1) employer without the participation of a union; and

(b) A group nonjoint sponsor, i.e., an apprenticeship program sponsored by two (2) or more employers without the participation of a union.

(9) "Office of Apprenticeship" means the Office of Apprenticeship within the United States Department of Labor.

(10) "Provisional registration" means the one (1) year initial provisional approval of newly registered programs that meet the required standards for program registration, after which program approval shall be:

(a) Made permanent;

(b) Continued as provisional; or

(c) Rescinded following a review by the registration agency.

(11) "Registration agency" means the Kentucky Labor Cabinet, Department of Workplace Standards and its division charged with the responsibility and accountability for apprenticeship within the Commonwealth of Kentucky.

(12)[~~(10)~~] "Registration of an apprenticeship program" means the acceptance and recording of the program by the supervisor, which confirms that the program meets the basic standards and requirements for approval as indicated by written evidence.

(13)[~~(11)~~] "Related instruction" is defined by KRS 343.010(11).

(14)[~~(12)~~] "Sponsor" is defined by KRS 343.010(9).

(15) "State apprenticeship agency" means the Kentucky Department of Workplace Standards and its division charged with the responsibility and accountability for apprenticeship within the Commonwealth of Kentucky.

(16)[~~(13)~~] "Supervisor" is defined by KRS 343.010(5).

(17) "Technical assistance" means guidance provided by registration agency staff in the development, revision, amendment, or processing of a potential or current program sponsor's standards of apprenticeship, apprenticeship agreements, or advice or consultation with a program sponsor to further compliance with this administrative regulation or guidance from the Office of Apprenticeship to a state apprenticeship agency on how to remedy nonconformity with this administrative regulation.

(18) "Transfer" means a shift of apprenticeship registration from one (1) program to another or from one (1) employer within a program to another employer within that same program, if there is agreement between the apprentice and the affected ***joint*** apprenticeship committees or ***nonjoint apprenticeship*** program sponsors.

Section 2. (1) Only an apprenticeship program or agreement that meets the criteria established in this subsection shall be eligible for state apprenticeship agency registration.[~~shall not be eligible for registration unless:~~]

(a) It is in conformity with the requirements of this administrative regulation and the training is in an apprenticeable occupation having the characteristics set forth in 29 C.F.R. 29.4.[~~approved by the Bureau; and~~]

(b) It is in conformity with the regulations on "Equal Employment Opportunity in Apprenticeship and Training" set forth in 29 C.F.R. Part 30, as amended, and Kentucky law on "Equal Employment Opportunity in Apprenticeship and Training" set forth in KRS Chapter 344.

(c) Except as provided under paragraph (d) of this subsection, apprentices shall be individually registered under a registered program. Individual registration may be accomplished:

1. By filing copies of each individual apprenticeship agreement with the registration agency; or

2. Subject to prior state apprenticeship agency approval, by filing a master copy of the agreement followed by a listing of the name, ***pursuant to KRS 343.050[~~and other required data~~]***, of each individual when apprenticed.

(d) The names of persons in probationary employment as apprentices under an apprenticeship program registered by the state apprenticeship agency, if not individually registered under the program, shall be submitted within forty-five (45) days of employment to the state apprenticeship agency for certification to establish the apprentice as eligible for probationary employment.

(e) The registration agency shall be notified within forty-five (45) days of persons who have successfully completed apprenticeship programs; and of transfers, suspensions, and cancellations of apprenticeship agreements and a statement of the reasons therefore.

(f) Applications for new programs that the registration agency determines meet the required standards for program registration shall be given provisional ***registration[~~approval~~]*** for a period of one (1) year. The registration agency shall review all new programs for quality and for conformity with the requirements of this administrative regulation at the end of the first year after registration. At that time:

1. A program that conforms with the requirements of this administrative regulation ***shall***:

a.***[~~May~~]*** Be made permanent; or

b.***[~~May~~]*** Continue to be provisionally ***registered[~~approved~~]*** through the first full training cycle.

2. A program not in operation or not conforming to the ***administrative*** regulations during the provisional ***registration[~~approval~~]*** shall be recommended for deregistration procedures.

(2) Approved apprenticeship programs shall be accorded registration, evidenced by a certificate of registration or other written indicia.

(3) Any modification or change to a registered program shall be promptly submitted to the registration office and, if approved, shall be recorded and acknowledged as an amendment to the program.

(4) The request for registration of an apprenticeship program, together with all documents and data required by this administrative regulation, shall be submitted in writing or electronic transmission to the supervisor of apprenticeship[~~three (3) copies~~].

(5)(a) If a program is proposed for registration by an employer or employers' association, written acknowledgement of union agreement or "no objection" to the registration shall be required if[~~: 1.~~] the standards, collective bargaining agreement, or other instrument provides for participation by a union in any manner in the operation of substantive matters of the apprenticeship program.[~~; and~~]

(b) If union participation is not evidenced and practiced, the employer or employers' association shall simultaneously furnish a copy of the apprenticeship program and its application for registration to the union collective bargaining agent, if any, of the employees to be trained.

(c) The supervisor shall provide a reasonable time period of not less than forty-five (45)[~~thirty (30) days nor more than sixty (60)~~] days for receipt of any union comments before final action on the approval.

(6) If the employees to be trained have no collective bargaining agent, an apprenticeship program may be proposed for registration by an employer or group of employers.

Section 3. The[~~following~~] standards established in this section shall apply to an apprenticeship program.[~~:~~]

(1) The program shall be an organized, written plan embodying the terms and conditions of qualification, recruitment, selection, employment, training, and supervision of one (1) or more apprentices in an apprenticeable occupation and subscribed to by a sponsor who has undertaken to carry out the apprentice training program.

(2) The standards shall contain the equal opportunity pledge prescribed in the Kentucky State Plan for equal employment opportunity in apprenticeship and, if applicable, an affirmative action plan and a selection method in accordance with the Kentucky State Plan for equal employment opportunity in apprenticeship, and provisions concerning the following:

(a) The employment and training of the apprentice in a skilled occupation[~~trade~~];

(b) A term of apprenticeship, which for an individual apprentice ***shall[~~may~~]*** be measured either through the completion of the industry standard for on-the-job learning (at least 2,000 hours) (time-based approach), the attainment of competency (competency-based approach), or a blend of the time-based and competency-based approaches (hybrid approach).[~~not less than 2,000 hours of work experience, consistent with training requirements as established by industry practices~~]

1. The time-based approach measures skill acquisition through the individual apprentice's completion of at least 2,000 hours of on-the-job learning as described in a work process schedule.

2. The competency-based approach measures skill acquisition through the individual apprentice's successful demonstration of acquired skills and knowledge, as verified by the program sponsor. Programs utilizing this approach shall still require apprentices to complete an on-the-job learning component of registered apprenticeship. The program standards shall address how on-the-job learning will be integrated into the program, describe competencies, and identify an appropriate means of testing and evaluation for the competencies.

3. The hybrid approach measures the individual apprentice's skill acquisition through a combination of specified minimum number of hours of on-the-job learning and the successful demonstration of competency as described in a work process schedule.

4. The determination of the appropriate approach for the program standards is made by the program sponsor, subject to approval by the registration agency of the determination as appropriate to the apprenticeable occupation for which the program standards are registered;

(c) An outline of the work processes in which the apprentice will receive supervised work experience and training on the job, and the allocation of the approximate time to be spent in each major process;

(d) Provision for organized related and supplemental instruction in technical subjects related to the occupation[~~trade~~]. A minimum of 144 hours for each year of apprenticeship shall be required. This instruction in technical subjects may be accomplished through media such as classroom, occupational, or industry courses, electronic media, or other instruction approved by the registration agency. Every apprenticeship instructor shall:

1. Meet the state Department of Education's requirements for a vocational-technical instructor in the state of registration, or be a subject matter expert, which is an individual, such as a journeyworker, who is recognized within an industry as having expertise in a specific occupation; and

2. Have training in teaching techniques and adult learning styles, which may occur before or after the apprenticeship instructor has started to provide the related technical instruction[~~The instruction may be given in a classroom, through trade, industrial, or correspondence courses of equivalent value, or other forms of approved self-study~~];

(e) A progressively increasing schedule of wages to be paid the apprentice consistent with the skill acquired and whether the required school time shall be compensated. The entry wage shall

not be less than forty (40) percent of the established journeyman rate or not less than the minimum wage prescribed by federal or state law, whichever is greater. On projects where the wage rate has been established by law, the apprentice's rate of pay shall be based upon the established journeyman rate;

(f) Periodic review and evaluation of the apprentice's progress in job performance and related instruction and maintenance of appropriate progress records;

(g) The ratio of apprentices to journeymen consistent with proper supervision, training, and continuity of employment, and applicable provisions in collective bargaining agreements, but in a ratio of not more than one (1) apprentice for the first journeyman, and one (1) apprentice for each additional three (3) journeymen; unless approval is granted by the supervisor in cooperation with the commissioner[~~executive director~~] and Apprenticeship and Training Council;

(h) A probationary period of reasonable duration in relation to the full apprenticeship term,[~~not more than four (4) months~~] during which the apprenticeship agreement may be terminated by either party, with full credit for this period toward completion of apprenticeship. The probationary period shall not exceed twenty-five (25) percent of the term of the apprenticeship or one (1) year, whichever is shorter;

(i) Adequate and safe equipment and facilities for training and supervision, and safety training for apprentices on the job and in related instruction;

(j) Grant of advance standing or credit for previously acquired experience, training skills, or aptitude for all applicants equally, with commensurate wages for any accorded progression step;

(k) The transfer of an apprentice between apprenticeship programs and within an apprenticeship program shall be based on agreement between the apprentice and the affected ***joint*** apprenticeship committees or ***nonjoint apprenticeship*** program sponsors, and shall comply with the following requirements:

1. The transferring apprentice shall be provided a transcript of related instruction and on-the-job learning by the ***joint apprenticeship*** committee or ***nonjoint apprenticeship*** program sponsor;

2. Transfer shall be to the same occupation; and

3. A new apprenticeship agreement shall be executed when the transfer occurs between program sponsors[~~Transfer of employer's training obligation to another employer, if warranted, with full credit to apprentice for satisfactory time and training earned~~];

(l) Assurance of qualified training personnel and adequate supervision on the job;

(m) The placement of an apprentice under an apprenticeship agreement as required by KRS Chapter 343 and 803 Chapter 1. The agreement shall directly, or by reference, incorporate the standards of the program as part of the agreement;

(n) The required minimum qualifications for persons entering an apprenticeship program, with an eligible starting age to be not less than sixteen (16) years;

(o) Recognition for successful completion of apprenticeship evidenced by an appropriate certificate issued by the registration agency;

(p) ***Apprenticeship programs[~~Program standards~~]*** that utilize the competency-based or hybrid approach for progression through an apprenticeship and ***for which program sponsors[~~that~~]*** choose to issue interim credentials shall clearly identify the interim credentials, demonstrate how these credentials link to the components of the apprenticeable occupation, and establish the process for assessing an individual apprentice's demonstration of competency associated with the particular interim credential. Further, interim credentials shall only be issued ***by program sponsors*** for recognized components of an apprenticeable occupation, thereby linking interim credentials specifically to the knowledge, skills, and abilities associated with those components of the apprenticeable occupation;

(q) Identification of the registration agency;

(r)[~~(q)~~] Name and address of the appropriate authority under the program to receive, process, and make disposition of complaints;

(s)[~~(r)~~] Recording and maintenance of all records concerning apprenticeship as may be required by the state apprenticeship agency or other applicable law; and

(t)[~~(s)~~] Provision that all controversies or differences shall be resolved in accordance with KRS 343.050(8).

Section 4. Program Performance Standards. (1) Every registered apprenticeship program shall have at least one (1) registered apprentice, except for the following specified periods of time, which shall not exceed one (1) year:

(a) Between the date when a program is registered and the date of registration for its first apprentice; or

(b) Between the date that a program graduates an apprentice and the date of registration for the next apprentice in the program.

(2) Registration agencies shall evaluate performance of registered apprenticeship programs.

(a) The tools and factors to be used shall include***[~~, but are not limited to~~]*** quality assurance assessments, equal employment opportunity (EEO) compliance reviews, and completion rates.

(b) Any additional tools and factors used by the registration agency in evaluating program performance shall adhere to the goals and policies***[~~of the department~~]*** articulated in this administrative regulation***[~~and in guidance issued by the Office of Apprenticeship~~]***.

(3) In order to evaluate completion rates, the registration agency shall review a program's completion rates in comparison to the national average for completion rates. Based on the review, the registration agency shall provide technical assistance to programs with completion rates lower than the national average.

(4) Cancellation of apprenticeship agreements during the probationary period shall not have an adverse impact on a sponsor's completion rate.

Section 5. The apprenticeship agreement shall contain explicitly:

(1) The information required by KRS 343.050;

(2) The signatures required by KRS 343.060;

(3) Name and address of the program sponsor and registration agency;

(4) A reference incorporation as part of the agreement standards of the apprenticeship program as it exists on the date of the agreement and as it may be amended during the period of the agreement; and

(5) A statement that the apprentice will be accorded equal opportunity in all phases of apprenticeship employment and training, without discrimination because of race, color, national origin, sex, or age.

Section 6.[~~5.~~] Deregistration of a program may be initiated upon the voluntary action of the sponsor by request for cancellation of the registration, or upon a finding of good and sufficient reason by the supervisor instituting formal deregistration proceedings in accordance with the provisions of this section.

(1) Request by sponsor. The supervisor may cancel the registration of an apprenticeship program for good and sufficient reason by written acknowledgment of the request stating, but not limited to, the following matters:

(a) The registration is cancelled at sponsor's request, the reason for the cancellation, and effective date; and

(b) That, within fifteen (15) days of the date of the acknowledgment, the sponsor shall notify all apprentices:

1. Of the cancellation, the reason for the cancellation, and the effective date;

2. That the cancellation automatically deprives the apprentice of individual registration; and

3. That the deregistration of the program removes the apprentice from coverage for state and federal purposes; and

4. That all apprentices are referred to the registration agency for information about potential transfer to other registered apprenticeship programs.

(2) Deregistration by the registration agency upon reasonable cause. Formal deregistration. Deregistration proceedings may be undertaken if the apprenticeship program is not conducted,

operated, and administered in accordance with the registered provisions or the requirements of this administrative regulation, except that deregistration proceedings for violation of equal opportunity requirements shall be processed in accordance with the provisions in the Kentucky State Plan for equal employment opportunity in apprenticeship.

(a) If it appears the program is not being operated in accordance with the registered standards or this administrative regulation, the supervisor shall so notify the program sponsor in writing. The notice shall be sent by certified mail, with return receipt requested. The notice shall state the violations and the remedy required, and that a determination of reasonable cause for deregistration will be made unless corrective action is effected within fifteen (15) days. Upon request by the sponsor for good cause, the fifteen (15) day term may be extended by the supervisor. During the period for correction, the sponsor shall be assisted in every reasonable way to achieve conformity. If the required correction is not effected within the allotted time, the supervisor shall send a notice to the sponsor, by certified mail, return receipt requested, stating the following:

1. The notice is sent pursuant to this section;

2. Certain deficiencies (stating them) were called to sponsor's attention and remedial measures requested, with dates of the occasions and letters; and that the sponsor has failed or refused to effect correction; and

3. Based upon the stated deficiencies and failure of remedy, a determination of reasonable cause has been made and the program may be deregistered unless, within fifteen (15) days of the receipt of this notice, the sponsor requests a hearing.

(b) If a request for a hearing is not made, the supervisor shall issue a determination with respect to deregistration of the program.

(c) If the sponsor has not requested a hearing, the supervisor shall file his determination with the commissioner[~~executive director~~]. This determination shall contain all pertinent facts and circumstances concerning the nonconformity, including the findings and copies of all relevant documents and records.

(d) The supervisor's determination shall become final in accordance with KRS 343.070.

(e) If the sponsor requests a hearing, the commissioner[~~executive director~~] shall convene a hearing after due notice to the parties and shall make a final decision on the basis of the record before him.

(f) Any party to the dispute aggrieved by the order or decision of the commissioner[~~executive director~~] may appeal in accordance with KRS 343.070.

Section 7. The commissioner shall accord reciprocal approval for federal purposes to apprentices, apprenticeship programs, and standards that are registered in other states by the Office of Apprenticeship or a registration agency if reciprocity is requested by the apprenticeship program sponsor. Program sponsors seeking reciprocal approval shall meet the wage and hour provisions and apprentice ***ratio[~~ration~~]*** standards of the reciprocal state[~~6. Any apprenticeship programs and standards of employers and unions in other than the building and construction industry, which jointly form a sponsoring entity on a multistate basis and are registered pursuant to all requirements of this administrative regulation by any recognized state apprenticeship agency or by the bureau, shall be accorded registration or approved reciprocity by the supervisor if this reciprocity is requested by the sponsoring entity~~].

ANTHONY RUSSELL, Commissioner

APPROVED BY AGENCY: October 15, 2014

FILED WITH LRC: October 15, 2014 at 11 a.m.

CONTACT PERSON: E.H. "Chip" Smith, IV, 1047 US HWY 127 S, Frankfort, Kentucky 40601, phone 502-564-3281, fax 502-564-5484.

PUBLIC PROTECTION CABINET
Kentucky Horse Racing Commission
(As Amended at ARRS, December 9, 2014)

810 KAR 1:028. Disciplinary measures and penalties.

RELATES TO: KRS 230.215, 230.260, 230.265, 230.290, 230.300, 230.320, 230.361

STATUTORY AUTHORITY: KRS 230.215, 230.240, 230.260, 230.320

NECESSITY, FUNCTION, AND CONFORMITY: KRS 230.260(8) authorizes the commission to promulgate necessary and reasonable administrative regulations under which racing shall be conducted in Kentucky. This administrative regulation establishes the penalty structure for rule violations and also establishes disciplinary powers and duties of the stewards and the commission.

Section 1. Definitions. (1) "Associated person" means the spouse of an inactive person, or a companion, family member, employer, employee, agent, partnership, partner, corporation, or other entity whose relationship, whether financial or otherwise, with an inactive person would give the appearance that the other person or entity would care for or train a horse or perform veterinarian services on a horse for the benefit, credit, reputation, or satisfaction of the inactive person.

(2) "Class A drug" means a drug, medication, or substance classified as a Class A drug, medication, or substance in the schedule.

(3) "Class B drug" means a drug, medication, or substance classified as a Class B drug, medication, or substance in the schedule.

(4) "Class C drug" means a drug, medication, or substance classified as a Class C drug, medication, or substance in the schedule.

(5) "Class D drug" means a drug, medication, or substance classified as a Class D drug, medication, or substance in the schedule.

(6) "Companion" means a person who cohabits with or shares living accommodations with an inactive person.

(7) "Inactive person" means a trainer or veterinarian who has his or her license denied or suspended or revoked for thirty (30) or more days pursuant to 810 KAR Chapter 1 or KRS Chapter 230.

(8) "NSAID" means a non-steroidal anti-inflammatory drug.

(9) "Primary threshold" means the thresholds for phenylbutazone, flunixin, and ketoprofen provided in 810 KAR 1:018, Section 8(1)(a), (b), and (c), respectively.

(10) "Schedule" means the Kentucky Horse Racing Commission Uniform Drug, Medication, and Substance Classification Schedule as provided in 810 KAR 1:040.

(11) "Secondary threshold" means the thresholds for phenylbutazone and flunixin provided in 810 KAR 1:018, Section 8(3)(b) and (c), respectively.

(12) "Withdrawal guidelines" means the Kentucky Horse Racing Commission Withdrawal Guidelines Thoroughbreds, Quarter Horse, Appaloosa, and Arabians as provided in 810 KAR 1:040.

Section 2. General Provisions. (1) An alleged violation of the provisions of KRS Chapter 230 relating to thoroughbred racing or 810 KAR Chapter 1 shall be adjudicated in accordance with 810 KAR 1:029, KRS Chapter 230, and KRS Chapter 13B.

(2) If a drug, medication, or substance is found to be present in a pre-race or post-race sample or possessed or used by a licensee at a location under the jurisdiction of the commission that is not classified in the schedule, the commission may establish a classification after consultation with either or both of the Association of Racing Commissioners International and the Racing and Medication Testing Consortium or their respective successors.

(3) The stewards and the commission shall consider any mitigating or aggravating circumstances properly presented when assessing penalties pursuant to this administrative regulation. A licensee may provide evidence to the stewards or the commission

that the licensee complied fully with the withdrawal guidelines as a mitigating factor.

(4)[~~The commission may suspend or revoke the commission-issued license of an owner, trainer, veterinarian, or other licensee.~~

~~(5)~~] A licensee whose license has been suspended or revoked in any racing jurisdiction or a horse that has been deemed ineligible to race in any racing jurisdiction, shall be denied access to locations under the jurisdiction of the commission during the term of the suspension or revocation.

(5)[~~(6)~~] A suspension or revocation shall be calculated in Kentucky racing days, unless otherwise specified by the stewards or the commission in a ruling or order.

(6)[~~(7)~~] A person assessed any penalty, including a written warning, pursuant to this administrative regulation shall have his or her name and the terms of his or her penalty placed on the official Web site of the commission and the Association of Racing Commissioners International, or its successor. If an appeal is pending, that fact shall be so noted.

(7)[~~(8)~~] A horse administered a substance in violation of 810 KAR 1:018 may be required to pass a commission-approved examination as determined by the stewards pursuant to 810 KAR 1:012, Section 10, or be placed on the veterinarian's list pursuant to 810 KAR 1:018, Section 18.

(8)[~~(9)~~](a) A claimed horse may be tested for the presence of prohibited substances if the claimant completes the Request for Post-Race Testing of Claimed Horse form and includes the form in the claim ***blank*** envelope, which is[~~requests the test when the claim form is completed and~~] deposited in the association's claim box. The request shall not be valid if the form is not filled out completely and included in the claim envelope. The claimant shall bear the costs of the test. The results of the test shall be reported to the chief state steward.

(b) A person who claims a horse may void the claim if the post-race or TCO2 test indicates a Class A, B, or C drug violation, or a total carbon dioxide (TC02) level exceeding 37.0 millimoles per liter. If the claim is voided, the person claiming the horse shall then be entitled to reimbursement from the previous owner of all reasonable costs associated with the claiming process and the post-race or TCO2 testing, including the costs of transportation, board, training, veterinary or other medical services, testing, and any other customary or associated costs or fees.

(c) While awaiting test results, a claimant:

1. Shall exercise due care in maintaining and boarding a claimed horse; and

2. Shall not materially alter a claimed horse.

(9)[~~(10)~~] To protect the racing public and ensure the integrity of racing in Kentucky, a trainer whose penalty for a Class A violation or for a Class B third offense violation has not been fully and finally adjudicated may, if stall space is available, be required to house a horse that the trainer has entered in a race in a designated stall for the twenty-four (24) hour period prior to post time of the race in which the horse is entered. If the stewards require the trainer's horse to be kept in a designated stall, there shall be twenty-four (24) hour surveillance of the horse by the association, and the cost shall be borne by the trainer.

(10) In addition to the penalties contained in Section 4 of this administrative regulation for the trainer and owner, any other person who administers, is a party to, facilitates, or is found to be responsible for any violation of 810 KAR 1:018 shall be subject to the relevant penalty as provided for the trainer or other penalty as may be appropriate based upon the violation.

(11) A veterinarian who administers,[~~or~~] is a party to,[~~or~~] facilitates[~~the administration of~~], or is found to be responsible for any[~~the administration of a Class A drug to a horse, in~~] violation of KRS Chapter 230 or 810 KAR Chapter 1[~~1:018, or who has engaged in prohibited practices in violation of 810 KAR 1:018,~~] shall be reported to the Kentucky Board of Veterinary Examiners and the state licensing Board of Veterinary Medicine by the stewards.

(12) ***In accordance with KRS 230.320(6),*** an administrative action or the imposition of penalties pursuant to this administrative regulation shall not constitute a bar or be considered jeopardy to prosecution of an act that violates the criminal statutes of Kentucky.

(13) If a person is charged with committing multiple or successive overages involving a Class C or D drug, the stewards or the commission may charge the person with only one (1) offense if the person demonstrates that he or she was not aware that overages were being administered because the positive test results showing the overages were unavailable to the person charged. In this case, the person alleging that he or she was not aware of the overages shall bear the burden of proving that fact to the stewards or the commission.

(14) If a penalty for a medication violation requires a horse to be placed on the stewards' list for a period of time, the stewards may waive this requirement if ownership of the horse was legitimately transferred prior to the trainer's notification by the commission of the positive test result.

Section 3. Prior Offenses. A prior offense occurring in Kentucky or any other racing jurisdiction shall be considered by the stewards and by the commission in assessing penalties. The stewards shall attach to a penalty judgment a copy of the offender's prior record containing violations that were committed both inside and outside of Kentucky.

Section 4. Penalties for Class A, B, C, and D Drug Violations and NSAID and Furosemide Violations. (1) Class A drug.

(a) TRAINER

First offense	Second lifetime offense in any racing jurisdiction	Third lifetime offense in any racing jurisdiction
One (1) to three (3) year suspension; AND $10,000 to $25,000 fine.	Three (3) to five (5) year suspension; AND $25,000 to $50,000 fine.	Five (5) year suspension to a lifetime ban; AND $50,000 to $100,000 fine.

(b) OWNER

First offense	Second lifetime offense in any racing jurisdiction in a horse owned by the same owner	Third lifetime offense in any racing jurisdiction in a horse owned by the same owner
Disqualification and loss of purse; AND Horse shall be placed on the stewards' list for sixty (60) days and may be required to pass a commission-approved examination before being eligible to enter as determined by the stewards.	Disqualification and loss of purse; AND Horse shall be placed on the stewards' list for 120 days and may be required to pass a commission-approved examination before being eligible to enter as determined by the stewards.	Disqualification and loss of purse; AND Ninety (90) day suspension; AND $50,000 fine; AND Horse shall be placed on the stewards' list for 180 days and may be required to pass a commission-approved examination before being eligible to enter as determined by the stewards.

(2) Class B drug.
(a) TRAINER

First offense	Second offense within a 365-day period in any racing jurisdiction	Third offense within a 365-day period in any racing jurisdiction
Thirty (30) to sixty (60) day suspension; AND $500 to $1,000 fine.	Sixty (60) to 180 day suspension; AND $1,000 to $2,500 fine.	180 to 365 day suspension; AND $2,500 to $5,000 fine.

(b) OWNER

First offense	Second offense within a 365-day period in any racing jurisdiction in a horse owned by the same owner	Third offense within a 365-day period in any racing jurisdiction in a horse owned by the same owner
Disqualification and loss of purse; AND Horse may be required to pass a commission-approved examination before being eligible to enter as determined by the stewards.	Disqualification and loss of purse; AND Horse may be required to pass a commission-approved examination before being eligible to enter as determined by the stewards.	Disqualification and loss of purse; AND Horse shall be placed on the stewards' list for forty-five (45) days and may be required to pass a commission-approved examination before being eligible to enter as determined by the stewards.

(3)(a) The penalties established in paragraphs (b) and (c) of this subsection shall apply to a Class C drug violation and an overage of permitted NSAIDs as follows:
1. Phenylbutazone in a concentration greater than 5.0 mcg/ml;
2. Flunixin in a concentration greater than 100 ng/ml; and
3. Ketoprofen in a concentration greater than 50 ng/ml.
(b) TRAINER

First offense	Second offense within a 365-day period in any racing jurisdiction	Third offense within a 365-day period in any racing jurisdiction
Zero to ten (10) day suspension; AND $500 to $1,500 fine.	Ten (10) to thirty (30) day suspension; AND $1,500 to $2,500 fine.	Thirty (30) to sixty (60) day suspension; AND $2,500 to $5,000 fine.

(c) OWNER

First offense	Second offense within a 365-day period in any racing jurisdiction	Third offense within a 365-day period in any racing jurisdiction
Disqualification and loss of purse; AND Horse may be required to pass a commission-approved examination before being eligible to enter as determined by the stewards.	Disqualification and loss of purse; AND If same horse as first offense, horse shall be placed on the stewards' list for forty-five (45) days and may be required to pass a commission-approved examination before being eligible to enter as determined by the stewards.	Disqualification and loss of purse; AND $5,000 fine; AND If same horse as first and second offenses, horse shall be placed on the stewards' list for sixty (60) days and may be required to pass a commission-approved examination before being eligible to enter as determined by the stewards.

(4)(a)The penalties established in paragraphs (b) and (c) of this subsection shall apply to the following:
1. Overage of permitted NSAIDs as follows:
a. Phenylbutazone in a concentration ***greater than 2 mcg/ml through 5[~~of 2-5~~]*** mcg/ml;
b. Flunixin in a concentration ***greater than 20 ng/ml through 100[~~of 21-99~~]*** ng/ml; and
c. Ketoprofen in a concentration ***greater than 10 ng/ml through 50[~~of 11-49~~]*** ng/ml;
2. Overage of furosemide in a concentration greater than 100 ng/ml; and
3. Furosemide not identified when notice made that the horse would run on furosemide.
(b) TRAINER

First offense	Second offense within a 365-day period in any racing jurisdiction	Third offense within a 365-day period in any racing jurisdiction
Written warning to a $500 fine.	Written warning to a $750 fine.	$500 to $1,000 fine.

(c) OWNER

First offense	Second offense within a 365-day period in any racing jurisdiction	Third offense within a 365-day period in any racing jurisdiction
Horse may be required to pass a commission-approved examination before being eligible to enter as determined by the stewards.	Horse may be required to pass a commission-approved examination before being eligible to enter as determined by the stewards.	If same horse as first and second offenses, disqualification and loss of purse; AND Horse may be required to pass a commission-approved examination before being eligible to enter as determined by the stewards.

(d) If a furosemide violation occurs due solely to the actions or

inactions of the commission veterinarian, then the trainer and owner shall not be penalized.

(5) Multiple NSAIDs. Overage of two (2) permitted NSAIDs phenylbutazone, flunixin, and ketoprofen.

(a) TRAINER

	Concentrations of both permitted NSAIDs above the primary threshold.	Concentrations of one (1) permitted NSAID above the primary threshold and one (1) above the secondary threshold.	Concentrations of both permitted NSAIDs below primary threshold and above secondary threshold.
First offense	Zero to sixty (60) day suspension; AND $500 to $1,000 fine.	Zero to fifteen (15) day suspension; AND $250 to $750 fine.	Zero to five (5) day suspension; AND $250 to $500 fine.
Second offense within a 365-day period in any racing jurisdiction	Sixty (60) to 180 day suspension; AND $1,000 to $2,500 fine.	Fifteen (15) to thirty (30) day suspension; AND $750 to $1,500 fine.	Five (5) to ten (10) day suspension; AND $500 to $1,000 fine.
Third offense within a 365-day period in any racing jurisdiction	180 to 365 day suspension; AND $2,500 to $5,000 fine.	Thirty (30) to sixty (60) day suspension; AND $1,500 to $3,000 fine.	Ten (10) to fifteen (15) day suspension; AND $1,000 to $2,500 fine.

(b) OWNER

	Concentrations of both permitted NSAIDs above the primary threshold.	Concentrations of one (1) permitted NSAID above the primary threshold and one (1) above the secondary threshold.	Concentrations of both permitted NSAIDs below primary threshold and above secondary threshold.
First offense	Disqualification and loss of purse.	Disqualification and loss of purse.	***No Penalty.***
Second offense within a 365-day period in any racing jurisdiction	Disqualification and loss of purse.	Disqualification and loss of purse.	***No Penalty.***
Third offense within a 365-day period in any racing jurisdiction	Disqualification and loss of purse.	Disqualification and loss of purse.	***No Penalty.***

(6) Class D Drug.

(a) The penalties established in paragraph (b) of this subsection shall apply to a Class D drug violation.

(b) TRAINER

One (1) to four (4) offenses within a 365-day period in any racing jurisdiction	Five (5) or more offenses within a 365-day period in any racing jurisdiction
Zero to five (5) day suspension; AND $250 to $500 fine.	Five (5) to ten (10) day suspension; AND $500 to $1,000 fine.

Section 5. TCO2 Penalties. Penalties for violations of 810 KAR 1:018, Section 20(6), (7), ***or*** (8) shall be as follows:

(1) TRAINER

First offense	Second offense within a 365-day period in any racing jurisdiction	Third offense within a 365-day period in any racing jurisdiction	Subsequent offenses within a 365-day period in any racing jurisdiction
Zero to ninety (90) day suspension; AND $1,000 to $1,500 fine.	Ninety (90) to 180 day suspension; AND $1,500 to $3,000 fine.	180 to 365 day suspension; AND $3,000 to $5,000 fine.	One (1) year suspension to lifetime ban.

(b) OWNER

First offense	Second offense within a 365-day period in any racing jurisdiction	Third offense within a 365-day period in any racing jurisdiction	Subsequent offenses within a 365-day period in any racing jurisdiction
Disqualification and loss of purse.	Disqualification and loss of purse; AND If same horse as first offense, horse shall be placed on the stewards' list from fifteen (15) to sixty (60) days and may be required to pass a commission-approved examination before being eligible to enter as determined by the stewards.	Disqualification and loss of purse; AND If same horse as first and second offenses, horse shall be placed on the stewards' list from sixty (60) to 180 days and may be required to pass a commission-approved examination before being eligible to enter as determined by the stewards.	Disqualification and loss of purse; AND If same horse as first, second, and third offenses, horse shall be placed on the stewards' list from 180 to 365 days and may be required to pass a commission-approved examination before being eligible to enter as determined by the stewards.
jurisdiction			

Section 6. Shock Wave Machine and Blood Gas Machine Penalties. Penalties for violations of 810 KAR 1:018, Section 20(5), (9), or (10), shall be as follows:

(1) TRAINER

First offense	Second lifetime offense in any racing jurisdiction	Third lifetime offense in any racing jurisdiction
Thirty (30) to sixty (60) day suspension; AND $1,000 to $5,000 fine.	Sixty (60) to 180 day suspension; AND $5,000 to $10,000 fine.	180 to 365 day suspension; AND $10,000 to $20,000 fine.

(2) OWNER

First offense	Second lifetime offense in any racing jurisdiction	Third lifetime offense in any racing jurisdiction
Disqualification and loss of purse.	Disqualification and loss of purse; AND If same horse as first offense, horse shall be placed on the stewards' list from fifteen (15) to sixty (60) days and may be required to pass a commission-approved examination before being eligible to enter as determined by the stewards.	Disqualification and loss of purse; AND If same horse as first and second offenses, horse shall be placed on the stewards' list from sixty (60) to 180 days and may be required to pass a commission-approved examination before being eligible to enter as determined by the stewards.

Section 7. Out-of-Competition Testing. The penalties established in 810 KAR 1:110, Section 8, shall apply to violations involving the prohibited substances and practices described in Section 2 of that administrative regulation.[~~Section 4. Penalties for Class A, B, C, and D Drug Violations and NSAID and Furosemide Violations. (1) Class A drug. A horse that tests positive for a Class A drug shall be disqualified and listed as unplaced and all purse money shall be forfeited. In addition, a licensee who administers, or is a party to or responsible for administering a Class A drug to a horse shall be subject to the following penalties as deemed appropriate by the commission in keeping with the seriousness of the violation and the facts of the case:~~

~~(a) For a first offense:~~

~~1. A minimum one (1) year suspension, absent mitigating circumstances. The presence of aggravating factors may be used to impose a maximum of a three (3) year suspension or revocation. Section 8 of this administrative regulation shall apply to the person whose licensing privileges have been suspended or revoked; and~~

~~2. Payment of a fine of $5,000 to $10,000.~~

~~(b) For a second lifetime offense in any racing jurisdiction:~~

~~1. A minimum three (3) year suspension or revocation, absent mitigating circumstances. The presence of aggravating factors may be used to impose a maximum of a five (5) year suspension or revocation. Section 8 of this administrative regulation shall apply to the person whose licensing privileges have been suspended or revoked; and~~

~~2. Payment of a fine of $10,000 to $20,000.~~

~~(c) For a third lifetime offense in any racing jurisdiction:~~

~~1. A minimum five (5) year suspension or revocation, absent mitigating circumstances. The presence of aggravating factors may be used to impose a maximum of a lifetime revocation. Section 8 of this administrative regulation shall apply to the person whose licensing privileges have been suspended or revoked; and~~

~~2. Payment of a fine of $20,000 to $50,000.~~

~~(d) Horse ineligible. A horse that tests positive for a Class A drug shall be ineligible to race in Kentucky as follows:~~

~~1. For a first offense, the horse shall be ineligible from zero days to sixty (60) days;~~

~~2. For a second offense in a horse owned by the same owner, the horse shall be ineligible from sixty (60) days to 180 days; and~~

~~3. For a third offense in a horse owned by the same owner, the horse shall be ineligible from 180 to 240 days.~~

~~(2) Class B drug. A horse that tests positive for a Class B drug shall be disqualified and listed as unplaced and all purse money shall be forfeited. In addition, a licensee who administers, or is a party to or responsible for administering a Class B drug to a horse shall be subject to the following penalties as deemed appropriate by the commission in keeping with the seriousness of the violation and the facts of the case:~~

~~(a) For a first offense:~~

~~1. A minimum fifteen (15) day suspension, absent mitigating circumstances. The presence of aggravating factors may be used to impose a maximum of a sixty (60) day suspension or revocation. Section 8 of this administrative regulation shall apply to a person whose licensing privileges have been suspended or revoked; and~~

~~2. Payment of a fine of $500 to $1,000.~~

~~(b) For a second offense within a 365-day period in any racing jurisdiction:~~

~~1. A minimum sixty (60) day suspension, absent mitigating circumstances. The presence of aggravating factors may be used to impose a maximum of a 180 day suspension. Section 8 of this administrative regulation shall apply to a person whose licensing privileges have been suspended or revoked; and~~

~~2. Payment of a fine of $1,000 to $2,500.~~

~~(c) For a third offense within a 365-day period in any racing jurisdiction:~~

~~1. A minimum 180 day suspension, absent mitigating circumstances. The presence of aggravating factors may be used to impose a maximum of a one (1) year suspension. Section 8 of this administrative regulation shall apply to the person whose licensing privileges have been suspended or revoked; and~~

~~2. Payment of a fine of $2,500 to $5,000.~~

~~(d) Horse ineligible. A horse that tests positive for a Class B drug shall be ineligible to race in Kentucky as follows:~~

~~1. For a first offense, the horse shall be ineligible from zero days to sixty (60) days;~~

~~2. For a second offense in a horse owned by the same owner, the horse shall be ineligible from sixty (60) days to 180 days; and~~

~~3. For a third offense in a horse owned by the same owner, the horse shall be ineligible from 180 days to 240 days.~~

~~(3) Class C drug or overage of either permitted NSAID flunixin or ketoprofen.~~

~~(a)The following licensees shall be subject to the penalties in paragraphs (b) through (d) of this subsection as deemed appropriate by the commission in keeping with the seriousness of the violation and the facts of the case:~~

~~1. A licensee who administers, or is a party to or responsible for administering a Class C drug to a horse, in violation of 810 KAR 1:018; and~~

~~2. A licensee who is responsible for an overage of either permitted NSAID flunixin or ketoprofen in the following concentrations in violation of 810 KAR 1:018:~~

~~a. Flunixin, greater than 100 ng/ml; or~~

~~b. Ketoprofen, greater than 50 ng/ml.~~

~~(b) For a first offense:~~

~~1. A suspension or revocation of licensing privileges from zero days to ten (10) days;~~

~~2. Payment of a fine of $250 to $500; and~~

~~3. Forfeiture of purse money won.~~

~~(c) For a second offense within a 365-day period:~~

~~1. A suspension or revocation of licensing privileges from ten (10) days to thirty (30) days;~~

~~2. Payment of a fine of $500 to $1,000; and~~

~~3. Forfeiture of purse money won.~~

~~(d) For a third offense within a 365-day period:~~

~~1. A suspension or revocation of licensing privileges from thirty (30) days to sixty (60) days;~~

~~2. Payment of a fine of $1,000 to $2,500; and~~

~~3. Forfeiture of purse money won.~~

~~(e) Notwithstanding paragraphs (a) through (d) of this subsection, a licensee who administers, or is a party to or responsible for an overage of either permitted NSAID flunixin or ketoprofen in the following concentrations shall be subject to the following penalties as deemed appropriate by the commission in keeping with the seriousness of the violation and the facts of the case:~~

~~1. Flunixin (21-99 ng/ml); or~~

~~2. Ketoprofen (11-49ng/ml).~~

~~a. For a first offense:~~

~~(i) A suspension or revocation of licensing privileges from zero days to five (5) days; and~~

~~(ii) Payment of a fine of $250 to $500.~~

~~b. For a second offense within a 365-day period:~~

~~(i) A suspension or revocation of licensing privileges from five (5) days to ten (10) days; and~~

~~(ii) Payment of a fine of $500 to $1,000.~~

~~c. For a third offense within a 365-day period:~~

~~(i) A suspension or revocation of licensing privileges from ten (10) days to fifteen (15) days.~~

~~(ii) Payment of a fine of $1,000 to $2,500; and~~

~~(iii) Forfeiture of purse money won.~~

~~(4) Overage of Permitted NSAID Phenylbutazone.~~

~~(a) A licensee who administers, or is a party to or responsible for an overage of the permitted NSAID phenylbutazone in a concentration of greater than 2.0 mcg/ml and less than 5.1 mcg/ml shall be subject the following penalties as deemed appropriate by the commission in keeping with the seriousness of the violation and the facts of the case:~~

~~1. For a first offense:~~

~~a. Minimum penalty of a written warning up to a maximum penalty of a $500 fine; and~~

~~b. The horse may not be eligible to enter until it has been approved for racing by the commission veterinarian.~~

~~2. For a second offense within a 365-day period:~~

~~a. Minimum penalty of a written warning up to a maximum penalty of a $750 fine; and~~

~~b. The horse shall not be eligible to enter until it has been approved for racing by the commission veterinarian.~~

~~3. For a third offense within a 365-day period:~~

~~a. A fine of $500 to $1,000;~~

~~b. Forfeiture of purse money won;~~

~~c. The horse shall be disqualified and listed as unplaced; and~~

~~d. The horse shall not be eligible to enter until it has been approved for racing by the commission veterinarian.~~

~~(b) A licensee who administers, or is a party to or responsible for an overage of the permitted NSAID Phenylbutazone in a concentration of greater than 5.0 mcg/ml shall be subject to the following penalties as deemed appropriate by the commission in keeping with the seriousness of the violation and the facts of the case:~~

~~1. For a first offense, payment of a fine from $1,000 to $1,500; and~~

~~2. For a second offense within a 365-day period:~~

~~a. Payment of a fine from $1,500 to $2,500;~~

~~b. A suspension of licensing privileges for fifteen (15) days, unless the stewards or the commission finds mitigating circumstances;~~

~~c. Forfeiture of purse money won; and~~

~~d. The horse shall be disqualified and listed as unplaced.~~

~~3. For a third offense within a 365-day period:~~

~~a. A fine of $2,500 to $5,000;~~

~~b. A suspension of licensing privileges for thirty (30) days, unless the stewards or the commission finds mitigating circumstances;~~

~~c. Forfeiture of purse money won; and~~

~~d. The horse shall be disqualified and listed as unplaced.~~

~~(5) Furosemide Violations.~~

~~(a) The following licensees shall be subject to the following penalties as deemed appropriate by the commission in keeping with the seriousness of the violation and the facts of the case:~~

~~1. A licensee who administers, or is party to or responsible for administering an overage of furosemide in a concentration greater than 100 ng/ml; and~~

~~2. A licensee who has not administered furosemide when notice has been made that the horse shall race on furosemide pursuant to 810 KAR 1:018, Section 7.~~

~~(b) For a first offense:~~

~~1. A suspension or revocation of licensing privileges from zero days to five (5) days; and~~

~~2. Payment of a fine of $250 to $500.~~

~~(c) For a second offense within a 365-day period:~~

~~1. A suspension or revocation of licensing privileges from five (5) days to ten (10) days; and~~

~~2. Payment of a fine of $500 to $1,000.~~

~~(d) For a third offense within a 365-day period:~~

~~1. A suspension or revocation of licensing privileges from ten (10) days to fifteen (15) days;~~

~~2. Payment of a fine of $1,000 to $2,500; and~~

~~3. Forfeiture of purse money won.~~

~~(6) Multiple NSAIDs. A licensee who is responsible for an overage of two (2) of the permitted NSAIDs flunixin, ketoprofen, or phenylbutazone shall be subject to the following penalties as deemed appropriate by the commission in keeping with the seriousness of the violation and the facts of the case:~~

~~(a) For violations where the concentrations of both of the two (2) permitted NSAIDs is above the primary thresholds:~~

~~1. For a first offense:~~

~~a. A suspension or revocation of licensing privileges from zero days to sixty (60) days. Section 8 of this administrative regulation shall apply to a person whose licensing privileges have been suspended or revoked;~~

~~b. Payment of a fine of $500 to $1,000; and~~

~~c. Forfeiture of purse money won.~~

~~2. For a second offense within a 365-day period:~~

~~a. A suspension or revocation of licensing privileges from sixty (60) days to 180 days. Section 8 of this administrative regulation shall apply to a person whose licensing privileges have been suspended or revoked;~~

~~b. Payment of a fine of $1,000 to $2,500; and~~

~~c. Forfeiture of purse money won.~~

~~3. For a third offense within a 365-day period:~~

~~a. A suspension or revocation of licensing privileges from 180 days to one (1) year. Section 8 of this administrative regulation shall apply to a person whose licensing privileges have been suspended or revoked;~~

~~b. Payment of a fine of $2,500 to $5,000; and~~

~~c. Forfeiture of purse money won.~~

~~(b) For violations where the concentration of one (1) of the two (2) permitted NSAIDs is above the primary threshold and one (1) of the two (2) permitted NSAIDs is above the secondary threshold:~~

~~1. For a first offense:~~

~~a. A suspension or revocation of licensing privileges from zero days to fifteen (15) days. Section 8 of this administrative regulation shall apply to a person whose licensing privileges have been suspended or revoked;~~

~~b. Payment of a fine of $250 to $750; and~~

~~c. Forfeiture of purse money won.~~

~~2. For a second offense within a 365-day period:~~

~~a. A suspension or revocation of licensing privileges from fifteen (15) days to thirty (30) days. Section 8 of this administrative regulation shall apply to a person whose licensing privileges have been suspended or revoked;~~

~~b. Payment of a fine of $750 to $1,500; and~~

~~c. Forfeiture of purse money won.~~

~~3. For a third offense within a 365-day period:~~

~~a. A suspension or revocation of licensing privileges from thirty (30) days to sixty (60) days. Section 8 of this administrative regulation shall apply to a person whose licensing privileges have~~

~~been suspended or revoked;~~

~~b. Payment of a fine of $1,500 to $3,000; and~~

~~c. Forfeiture of purse money won.~~

~~(c) For violations where the concentrations of both of the two (2) permitted NSAIDs are below the primary threshold and both of the two (2) permitted NSAIDs are above the secondary threshold:~~

~~1. For a first offense:~~

~~a. A suspension or revocation of licensing privileges from zero days to five (5) days. Section 8 of this administrative regulation shall apply to a person whose licensing privileges have been suspended or revoked; and~~

~~b. Payment of a fine of $250 to $500.~~

~~2. For a second offense within a 365-day period:~~

~~a. A suspension or revocation of licensing privileges from five (5) days to ten (10) days. Section 8 of this administrative regulation shall apply to a person whose licensing privileges have been suspended or revoked; and~~

~~b. Payment of a fine of $500 to $1,000.~~

~~3. For a third offense within a 365-day period:~~

~~a. A suspension or revocation of licensing privileges from ten (10) days to fifteen (15) days. Section 8 of this administrative regulation shall apply to a person whose licensing privileges have been suspended or revoked; and~~

~~b. Payment of a fine of $1,000 to $2,500.~~

~~(7) Class D Drug.~~

~~(a) The penalty for a first violation involving a Class D drug shall be a written warning to the trainer and owner.~~

~~(b) For multiple violations involving a Class D drug the licensee may be subject to a suspension of licensing privileges from zero days to five (5) days and a fine of no more than $250 as deemed appropriate by the commission in keeping with the seriousness of the violation and the facts of the case.~~

~~Section 5. Out-of-Competition Testing. The penalties established in 810 KAR 1:110, Section 8, shall apply to violations involving the prohibited substances and practices described in Section 2 of that administrative regulation.~~

~~Section 6. TCO2 penalties. A person who violates or causes the violation of 810 KAR 1:018, Section 20(6), (7), or (8) shall be subject to the following penalties as deemed appropriate by the commission in keeping with the seriousness of the violation and the facts of the case:~~

~~(1) For a first offense:~~

~~(a) A suspension or revocation of licensing privileges from zero days to three (3) months;~~

~~(b)Payment of a fine of $1,000 to $1,500; and~~

~~(c) Forfeiture of purse money won.~~

~~(2) For a second offense:~~

~~(a) A suspension or revocation of licensing privileges from three (3) months to six (6) months;~~

~~(b)Payment of a fine of $1,500 to $3,000; and~~

~~(c) Forfeiture of purse money won.~~

~~(3) For a third offense:~~

~~(a) A suspension or revocation of licensing privileges from six (6) months to one (1) year;~~

~~(b)Payment of a fine of $3,000 to $5,000; and~~

~~(c) Forfeiture of purse money won.~~

~~(4) For subsequent offenses:~~

~~(a) A suspension or revocation of licensing privileges from one (1) year up to a lifetime license revocation; and~~

~~(b) Forfeiture of purse money won.~~

~~(5) Horse ineligible. A horse that registers a TCO2 level in violation of 810 KAR 1:018, Section 20(6), (7), or (8) shall be ineligible to race in Kentucky as follows:~~

~~(a) For a first offense, no period of ineligibility;~~

~~(b) For a second offense in the same horse, the horse shall be ineligible from fifteen (15) days to sixty (60) days;~~

~~(c) For a third offense in the same horse, the horse shall be ineligible from sixty (60) days to 180 days; and~~

~~(d) For a fourth offense in the same horse, the horse shall be ineligible from 180 days to one (1) year.~~

~~Section 7. Shock Wave Machine and Blood Gas Machine Penalties. A person who violates or causes the violation of 810 KAR 1:018, Section (5), (9), or (10), shall be subject to the following penalties as deemed appropriate by the commission in keeping with the seriousness of the violation and the facts of the case.~~

~~(1) For a first offense:~~

~~(a) A suspension or revocation of licensing privileges from one (1) month to three (3) months;~~

~~(b) Payment of a fine of $1,000 to $5,000; and~~

~~(c) Forfeiture of purse money won.~~

~~(2) For a second offense:~~

~~(a) A suspension or revocation of licensing privileges from three (3) months to six (6) months;~~

~~(b) Payment of a fine of $5,000 to $10,000; and~~

~~(c) Forfeiture of purse money won.~~

~~(3) For a third offense:~~

~~(a) A suspension or revocation of licensing privileges from six (6) months to one (1) year;~~

~~(b) Payment of a fine of $10,000 to $20,000; and~~

~~(c) Forfeiture of purse money won.~~]

Section 8. Persons with a Suspended or Revoked License. (1) A person shall not train a horse or practice veterinary medicine for the benefit, credit, reputation, or satisfaction of an inactive person. The partners in a veterinary practice may provide services to horses if the inactive person does not receive a pecuniary benefit from those services.

(2) An associated person of an inactive person shall not:

(a) Assume the inactive person's responsibilities at a location under the jurisdiction of the commission;

(b) Complete an entry form for a race to be held in Kentucky on behalf of or for the inactive person or an owner or customer for whom the inactive person has worked; or

(c) Pay or advance an entry fee for a race to be held in Kentucky on behalf of or for the inactive person or an owner or customer for whom the inactive person has worked.

(3) An associated person who assumes the responsibility for the care, custody, or control of an unsuspended horse owned (fully or partially), leased, or trained by an inactive person shall not:

(a) Be paid a salary directly or indirectly by or on behalf of the inactive person;

(b) Receive a bonus or any other form of compensation in cash, property, or other remuneration or consideration;

(c) Make a payment or give remuneration or other compensation or consideration to the inactive person or associated person; or

(d) Train or perform veterinarian work for the inactive person or an owner or customer of the inactive person at a location under the jurisdiction of the commission.

(4) A person who is responsible for the care, training, or veterinarian services provided to a horse formerly under the care, training, or veterinarian services of an inactive person shall:

(a) Bill customers directly on his or her bill form for any services rendered at or in connection with any race meeting in Kentucky;

(b) Maintain a personal checking account totally separate from and independent of that of the inactive person to be used to pay expenses of and deposit income from an owner or client of the inactive person;

(c) Not use the services, directly or indirectly, of current employees of the inactive person; and

(d) Pay bills related to the care, training, and racing of the horse from a separate and independent checking account. Copies of the invoices for the expenses shall be retained for not less than six (6) months after the date of the reinstatement of the license of the inactive person or the expiration of the suspension of the inactive person's license.

Section 9. Other Disciplinary Measures. (1) A person who violates 810 KAR 1:018, Section 20(2), shall be treated the same as a person who has committed a drug violation of the same class, as determined by the commission after consultation with the

Equine Drug Research Council.

(2) A person who violates 810 KAR 1:018, Section 20(3), shall be treated the same as a person who has committed a Class A drug violation.

Section 10. Disciplinary Measures by Stewards. Upon finding a violation or an attempted violation of the provisions of KRS Chapter 230 relating to thoroughbred racing or 810 KAR Chapter 1, if not otherwise provided for in this administrative regulation, the stewards may impose one (1) or more of the following penalties:

(1) If the violation or attempted violation may affect the health or safety of the horse or a participant in a race or may affect the outcome of a race, declare a horse or a licensee ineligible to race or disqualify a horse or licensee in a race;

(2) Suspend or revoke a person's licensing privileges for a period of time of not more than five (5) years as may be deemed appropriate by the stewards in keeping with the seriousness of the violation and the facts of the case;

(3) Cause a person, licensed or unlicensed, found to have interfered with, or contributed toward the interference of the orderly conduct of a race or race meeting, or person whose presence is found by the stewards to be inconsistent with maintaining the honesty and integrity of the sport of horse racing to be excluded or ejected from association grounds or from a portion of association grounds; or

(4) Payment of a fine in an amount not to exceed $50,000 as may be deemed appropriate by the stewards in keeping with the seriousness of the violation and the facts of the case.

Section 11. Disciplinary measures by the commission. Upon finding a violation or an attempted violation of the provisions of KRS Chapter 230 relating to thoroughbred racing or 810 KAR Chapter 1, if not otherwise provided for in this administrative regulation, the commission may impose one (1) or more of the following penalties:

(1) If the violation or attempted violation may affect the health or safety of the horse or a participant in a race or may affect the outcome of a race, declare a horse or a licensee ineligible to race or disqualify a horse or licensee in a race;

(2) Suspend or revoke a person's licensing privileges for a period of time of not more than five (5) years as may be deemed appropriate by the commission in keeping with the seriousness of the violation;

(3) Eject or exclude persons from association grounds for a length of time the commission deems necessary; or

(4) Payment of a fine in an amount not to exceed $50,000 as may be deemed appropriate by the commission in keeping with the seriousness of the violation and the facts of the case.

Section 12. Incorporation by Reference. (1) The following material is incorporated by reference:

(a) "Request for Post-Race Testing of Claimed Horse", August 2014; and

(b) "Claim Blank envelope", 2014.

(2) This material may be inspected, copied, or obtained, subject to applicable copyright law, at the Kentucky Horse Racing Commission, 4063 Iron Works Parkway, Building B, Lexington, Kentucky 40511, Monday through Friday, 8:00 a.m. to 4:30 p.m.

ROBERT M. BECK, JR., Chairman
LARRY R. BOND, Acting Secretary

APPROVED BY AGENCY: October 1, 2014

FILED WITH LRC: October 2, 2014 at noon

CONTACT PERSON: Susan B. Speckert, General Counsel, Kentucky Horse Racing Commission, 4063 Iron Works Parkway, Building B, Lexington, Kentucky 40511, phone (859) 246-2040, fax (859) 246-2039.

PUBLIC PROTECTION CABINET
Kentucky Horse Racing Commission
(As Amended at ARRS, December 9, 2014)

811 KAR 1:095. Disciplinary measures and penalties.

RELATES TO: KRS 230.215, 230.260, 230.265, 230.290, 230.300, 230.320

STATUTORY AUTHORITY: KRS 230.215, 230.240, 230.260, 230.320

NECESSITY, FUNCTION, AND CONFORMITY: KRS 230.215(2) and 230.260(8) authorize the commission to promulgate administrative regulations prescribing the conditions under which horse racing shall be conducted in Kentucky. KRS 230.240(2) requires the commission to promulgate administrative regulations restricting or prohibiting the use and administration of drugs or stimulants or other improper acts to horses prior to the horse participating in a race. This administrative regulation establishes the ***penalty structure for rule violations and also establishes*** disciplinary powers and duties of the judges and the commission.

Section 1. Definitions. (1) "Associated person" means the spouse of an inactive person, or a companion, family member, employer, employee, agent, partnership, partner, corporation or other entity whose relationship, whether financial or otherwise, with an inactive person would give the appearance that the other person or entity would care for or train a horse, or perform veterinarian services on a horse for the benefit, credit, reputation, or satisfaction of the inactive person.

(2) "Class A drug" means a drug, medication, or substance classified as a Class A drug, medication, or substance in the schedule.

(3) "Class B drug" means a drug, medication, or substance classified as a Class B drug, medication, or substance in the schedule.

(4) "Class C drug" means a drug, medication, or substance classified as a Class C drug, medication, or substance in the schedule.

(5) "Class D drug" means a drug, medication, or substance classified as a Class D drug, medication, or substance in the schedule.

(6) "Companion" means a person who cohabits with or shares living accommodations with an inactive person.

(7) "Inactive person" means a trainer or veterinarian who has his or her license denied or suspended or revoked for thirty (30) or more days pursuant to 811 KAR Chapter 1 or KRS Chapter 230.

(8) "NSAID" means a non-steroidal anti-inflammatory drug.

(9) "Primary threshold" means the thresholds for phenylbutazone, flunixin, and ketoprofen provided in 811 KAR 1:090, Section 8(2)(c), (3)(c), and (4)(c), respectively.

(10) "Schedule" means the Kentucky Horse Racing Commission Uniform Drug, Medication, and Substance Classification Schedule as provided in 811 KAR 1:093.

(11) "Secondary threshold" means the thresholds for phenylbutazone and flunixin provided in 811 KAR 1:090, Section 8(6)(b) and (c).

(12) "Withdrawal guidelines" means the Kentucky Horse Racing Commission Withdrawal Guidelines Standardbreds as provided in 811 KAR 1:093.

Section 2. General Provisions. (1) An alleged violation of 811 KAR 1:090 shall be adjudicated in accordance with this administrative regulation, and with 811 KAR 1:100, 811 KAR 1:105, and KRS Chapter 13B.

(2) If a drug, medication, or substance is found to be present in a pre-race or post-race sample or possessed or used by a licensee at a location under the jurisdiction of the commission that is not classified in the schedule, the commission may establish a classification after consultation with either or both of the Association of Racing Commissioners International and the Racing and Medication Consortium or their respective successors.

(3) The judges and the commission shall consider any

mitigating or aggravating circumstances properly presented when assessing penalties pursuant to this administrative regulation. Evidence of full compliance with the withdrawal guidelines shall be considered by the judges and the commission as a mitigating factor to be used in determining violations and penalties.

(4)[~~Pursuant to KRS 230.320, the commission may suspend or revoke the commission-issued license of an owner, trainer, veterinarian, or other licensee.~~

~~(5)~~] A licensee whose license has been suspended or revoked in any racing jurisdiction or a horse that has been deemed ineligible to race in any racing jurisdiction shall be denied access to locations under the jurisdiction of the commission during the term of the suspension or revocation.

(5)[~~(6)~~] A suspension or revocation shall be calculated in calendar days, unless otherwise specified by the judges or the commission in a ruling or order.

(6)[~~(7)~~] Written or printed notice of the assessment of a penalty, including a written warning, shall be made to the person penalized. The notice shall be posted immediately at the office of the association and sent to the commission, the United States Trotting Association, and the Association of Racing Commissioners International, or their successors, to be posted on their respective official Web sites. If an appeal is pending, that fact shall be so noted.

(7)[~~(8)~~] A horse administered a substance in violation of 811 KAR 1:090 may be required to pass a commission-approved examination as determined by the judges pursuant to 811 KAR 1:020, Section 5, or be placed on the veterinarian's list pursuant to 811 KAR 1:090, Section 18.

(8)[~~(9)~~] A person who claims a horse may void the claim if the post-race test indicates a Class A, B, or C drug violation, or a TCO2 level exceeding thirty-seven (37.0) millimoles per liter and receive reimbursement for reasonable costs associated with the claim as provided in 811 KAR 1:035, Section 3(14)(a)(3).

(9)[~~(10)~~] To protect the racing public and ensure the integrity of racing in Kentucky, a trainer whose penalty for a prior Class A violation or for a prior Class B third offense violation under this administrative regulation has not been finally adjudicated may, if stall space is available, be required to house a horse that the trainer has entered in a race in a designated stall for the twenty-four (24) hour period prior to post time of the race in which the horse is entered. If the judges require the trainer's horse to be kept in a designated stall, there shall be twenty-four (24) hour surveillance of the horse by the association and the cost shall be borne by the trainer.

(10) In addition to the penalties contained in Section 5 of this administrative regulation for the trainer and owner, any other person who administers, is a party to, facilitates, or is found to be responsible for any violation of 811 KAR 1:090 shall be subject to the relevant penalty as provided for the trainer or other penalty as may be appropriate based upon the violation.

(11) A veterinarian who administers, is a party to, facilitates, or is found responsible for any violation of KRS Chapter 230 or 811 KAR Chapter 1[~~has engaged in prohibited practices in violation of 811 KAR 1:090~~] shall be reported to the Kentucky Board of Veterinary Examiners and the state licensing board of veterinary medicine by the judges.

(12) ***In accordance with KRS 230.320(6),*** an administrative action or the imposition of penalties pursuant to this administrative regulation shall not constitute a bar or be considered jeopardy to prosecution of an act that violates the criminal statutes of Kentucky.

(13) If a person is charged with committing multiple or successive overages involving a Class C or Class D drug, medication, or substance, the judges or the commission may charge the person with only one (1) offense if the person demonstrates that he or she was not aware that overages were being administered because the positive test results showing the overages were unavailable to the person charged. In this case, the person alleging that he or she was not aware of the overages shall bear the burden of proving that fact to the judges or the commission.

(14) If a penalty for a medication violation requires a horse to be placed on the judges' list for a period of time, the judges may waive this requirement if ownership of the horse was legitimately transferred prior to the trainer's notification by the commission of the positive result.

(15) Any person who has been fined under this administrative regulation shall be suspended until the fine has been paid in full.

(16)[~~(15)~~] A fine shall not be paid directly or indirectly by a person other than the person upon whom it is imposed and any payment made shall not serve to abate or satisfy any penalty imposed.

(17)***[Written or printed notice of the assessment of a penalty shall be made to the person penalized, notice shall be posted immediately at the office of the association, and notice shall be forwarded immediately to the office of the commission, the United States Trotting Association, and the Association of Racing Commissioners International by the presiding judge or clerk of the course.***

(18)][~~(16)~~] If the penalty is for a driving violation and does not exceed in time a period of five (5) days, the driver may complete the engagement of all horses declared in before the penalty becomes effective. The driver may drive in stake, futurity, early closing and feature races, during a suspension of five (5) days or less, but the suspension shall be extended one (1) day for each date the driver drives in a race.

(18)[(19)][~~(17)~~] A horse shall not have the right to compete while owned or controlled wholly or in part by a person whose license has been suspended or revoked. An entry made by or for a licensee whose license has been suspended or revoked or for a horse which has been suspended shall be held liable for the entrance fee without the right to compete unless the penalty is removed.

(19)[(20)][~~(18)~~] An association shall not willfully allow a person whose license has been suspended or revoked to drive in a race, or a suspended or disqualified horse to start in a race or a performance against time.

(20)[(21)][~~(19)~~] An association shall not willfully allow the use of its track or grounds by a licensee whose license has been suspended or revoked, or a horse that has been suspended.

(21)[(22)][~~(20)~~] If a person is excluded from a pari-mutuel association by the association, the commission shall be notified.

(22)[(23)][~~(21)~~] A person subject to current suspension, revocation, or expulsion shall not act as an officer of an association. An association shall not, after receiving notice of the penalty, employ or retain in its employ an expelled, suspended, disqualified, or excluded person at or on the track during the progress of a race meeting.

(23)[(24)][~~(22)~~] A licensee that has been suspended shall serve any suspension imposed:

(a) During the current race meet, if there are enough remaining days to serve out the suspension;

(b) During the next regularly scheduled race meet at the operating race track where the infraction took place if there are not enough remaining days to serve out the suspension; or

(c) During a race meet at another operating track in this state where the licensee seeks to engage in the activity for which he or she is licensed if the track where the infraction took place closes before another race meet is held at that track.

(24)[(25)][~~(23)~~] A penalty imposed by the United States Trotting Association or the racing commission, or other governing body, of any racing jurisdiction shall be recognized and enforced by the commission unless application is made for a hearing before the commission, during which the applicant shall show cause as to why the penalty should not be enforced against him in Kentucky.

Section 3. Prior Offenses. A prior offense occurring in Kentucky or any other racing jurisdiction shall be considered by the judges and by the commission in assessing penalties. The judges shall attach to a penalty judgment a copy of the offender's prior record listing violations that were committed both inside and outside of Kentucky.

Section 4. Penalties for Violations Not Related To Drugs or Medications. (1) A licensee who commits a violation classified as a

Category 1 violation shall be subject to the following penalties as deemed appropriate by the commission in keeping with the seriousness of the violation and the facts of the case:

(a) A suspension or revocation of licensing privileges from zero days to thirty (30) days; and

(b) Payment of a fine not to exceed $5,000.

(2) A licensee who commits a violation classified as a Category 2 violation shall be subject to the following penalties as deemed appropriate by the commission in keeping with the seriousness of the violation and the facts of the case:

(a) A suspension or revocation of licensing privileges from thirty (30) days to sixty (60) days; and

(b) Payment of a fine not to exceed $10,000.

(3) A licensee who commits a violation classified as a Category 3 violation shall be subject to the following penalties as deemed appropriate by the commission in keeping with the seriousness of the violation and the facts of the case:

(a) A suspension or revocation of licensing privileges from sixty (60) days to permanent suspension or revocation; and

(b) Payment of a fine up to $50,000.

(4) A violation of 811 KAR Chapter 1 not otherwise specifically addressed shall be a Category 1 violation and shall be subject to the penalties set forth in subsection (1) of this section.

Section 5. Penalties for Violations Relating to Class A, B, C, or D Drugs. (1) Class A drug.

(a) TRAINER

First offense	Second lifetime offense in any racing jurisdiction	Third lifetime offense in any racing jurisdiction
One (1) to three (3) year suspension; AND $10,000 to $25,000 fine.	Three (3) to five (5) year suspension; AND $25,000 to $50,000 fine.	Five (5) year suspension to a lifetime ban; AND $50,000 to $100,000 fine.

(b) OWNER

First offense	Second lifetime offense in any racing jurisdiction in a horse owned by the same owner	Third lifetime offense in any racing jurisdiction in a horse owned by the same owner
Disqualification and loss of purse; AND Horse shall be placed on the judges' list for sixty (60) days and may be required to pass a commission-approved examination before being eligible to enter as determined by the judges.	Disqualification and loss of purse; AND Horse shall be placed on the judges' list for 120 days and may be required to pass a commission-approved examination before being eligible to enter as determined by the judges.	Disqualification and loss of purse; AND Ninety (90) day suspension; AND $50,000 fine; AND Horse shall be placed on the judges' list for 180 days and may be required to pass a commission-approved examination before being eligible to enter as determined by the judges.

(2) Class B drug.

(a) TRAINER

First offense	Second offense within a 365-day period in any racing jurisdiction	Third offense within a 365-day period in any racing jurisdiction
Thirty (30) to sixty (60) day suspension; AND $500 to $1,000 fine.	Sixty (60) to 180 day suspension; AND $1,000 to $2,500 fine.	180 to 365 day suspension; AND $2,500 to $5,000 fine.

(b) OWNER

First offense	Second offense within a 365-day period in any racing jurisdiction in a horse owned by the same owner	Third offense within a 365-day period in any racing jurisdiction in a horse owned by the same owner
Disqualification and loss of purse; AND Horse may be required to pass a commission-approved examination before being eligible to enter as determined by the judges.	Disqualification and loss of purse; AND Horse may be required to pass a commission-approved examination before being eligible to enter as determined by the judges.	Disqualification and loss of purse; AND Horse shall be placed on the judges' list for forty-five (45) days and may be required to pass a commission-approved examination before being eligible to enter as determined by the judges.

(3)(a) The penalties established in paragraphs (b) and (c) of this subsection shall apply to a Class C drug violation and an overage of permitted NSAIDs as follows:

1. Phenylbutazone in a concentration greater than 5.0 mcg/ml;
2. Flunixin in a concentration greater than 100 ng/ml; and
3. Ketoprofen in a concentration greater than 50 ng/ml.

(b) TRAINER

First offense	Second offense within a 365-day period in any racing jurisdiction	Third offense within a 365-day period in any racing jurisdiction
Zero to ten (10) day suspension; AND $500 to $1,500 fine.	Ten (10) to thirty (30) day suspension; AND $1,500 to $2,500 fine.	Thirty (30) to sixty (60) day suspension; AND $2,500 to $5,000 fine.

(c) OWNER

First offense	Second offense within a 365-day	Third offense within a 365-day period in

	period in any racing jurisdiction	any racing jurisdiction
Disqualification and loss of purse; AND Horse may be required to pass a commission-approved examination before being eligible to enter as determined by the judges.	Disqualification and loss of purse; AND If same horse as first offense, horse shall be placed on the judges' list for forty-five (45) days and may be required to pass a commission-approved examination before being eligible to enter as determined by the judges.	Disqualification and loss of purse; AND $5,000 fine; AND If same horse as first and second offenses, horse shall be placed on the judges' list for sixty (60) days and may be required to pass a commission-approved examination before being eligible to enter as determined by the judges.

(4)(a) The penalties established in paragraphs (b) and (c) of this subsection shall apply to the following:

1. Overage of permitted NSAIDs as follows:

a. Phenylbutazone in a concentration ***greater than 2 mcg/ml through 5[~~of 2-5~~]*** mcg/ml;

b. Flunixin in a concentration ***greater than 20 ng/ml through 100[~~of 21-99~~]*** ng/ml; and

c. Ketoprofen in a concentration ***greater than 10 ng/ml through 50[~~of 11-49~~]*** ng/ml.

(b) TRAINER

First offense	Second offense within a 365-day period in any racing jurisdiction	Third offense within a 365-day period in any racing jurisdiction
Written warning to a $500 fine.	Written warning to a $750 fine.	$500 to $1,000 fine.

(c) OWNER

First offense	Second offense within a 365-day period in any racing jurisdiction	Third offense within a 365-day period in any racing jurisdiction
Horse may be required to pass a commission-approved examination before being eligible to enter as determined by the judges.	Horse may be required to pass a commission-approved examination before being eligible to enter as determined by the judges.	If same horse as first and second offenses, disqualification and loss of purse; AND Horse may be required to pass a commission-approved examination before being eligible to enter as determined by the judges.

(5) Multiple NSAIDs. Overage of two (2) permitted NSAIDs phenylbutazone, flunixin, and ketoprofen.

(a) TRAINER

	Concentrations of both permitted NSAIDs above the primary threshold.	Concentrations of one (1) permitted NSAID above the primary threshold and one (1) above the secondary threshold.	Concentrations of both permitted NSAIDs below primary threshold and above secondary threshold.
First offense	Zero to sixty (60) day suspension; AND $500 to $1,000 fine.	Zero to fifteen (15) day suspension; AND $250 to $750 fine.	Zero to five (5) day suspension; AND $250 to $500 fine.
Second offense within a 365-day period in any racing jurisdiction	Sixty (60) to 180 day suspension; AND $1,000 to $2,500 fine.	Fifteen (15) to thirty (30) day suspension; AND $750 to $1,500 fine.	Five (5) to ten (10) day suspension; AND $500 to $1,000 fine.
Third offense within a 365-day period in any racing jurisdiction	180 to 365 day suspension; AND $2,500 to $5,000 fine.	Thirty (30) to sixty (60) day suspension; AND $1,500 to $3,000 fine.	Ten (10) to fifteen (15) day suspension; AND $1,000 to $2,500 fine.

(b) OWNER

	Concentrations of both permitted NSAIDs above the primary threshold.	Concentrations of one (1) permitted NSAID above the primary threshold and one (1) above the secondary threshold.	Concentrations of both permitted NSAIDs below primary threshold and above secondary threshold.
First offense	Disqualification and loss of purse.	Disqualification and loss of purse.	***No Penalty.***
Second offense within a 365-day period in any racing jurisdiction	Disqualification and loss of purse.	Disqualification and loss of purse.	***No Penalty.***
Third offense within a 365-day period in any racing jurisdiction	Disqualification and loss of purse.	Disqualification and loss of purse.	***No Penalty.***

(6) Class D drug.

(a) The penalties established in paragraph (b) of this subsection shall apply to a Class D drug violation.

(b) TRAINER

One (1) to four (4) offenses within a 365-day period in any racing jurisdiction	Five (5) or more offenses within a 365-day period in any racing jurisdiction
Zero to five (5) day suspension; AND $250 to $500 fine.	Five (5) to ten (10) day suspension; AND $500 to $1,000 fine.

Section 6. TCO2 penalties. In any instance of a positive pre-race TCO2 result, the horse shall be scratched. In addition, penalties for violations of 811 KAR 1:090, Section 20(6), (7), or (8) shall be as follows:

(1) TRAINER

First offense involving a pre-race test result	First offense involving a post-race test result	Second offense within a 365-day period in any racing jurisdiction involving a pre-race or a post-race test result	Third offense within a 365-day period in any racing jurisdiction involving a pre-race or a post-race test result	Subsequent offenses within a 365-day period in any racing jurisdiction involving a pre-race or a post-race test result
Zero to five (5) day suspension; AND $250 to $500 fine.	Zero to ninety (90) day suspension; AND $1,000 to $1,500 fine.	Ninety (90) to 180 day suspension; AND $1,500 to $3,000 fine.	180 to 365 day suspension; AND $3,000 to $5,000 fine.	One (1) year suspension to lifetime ban.

(2) OWNER

First offense involving a pre-race test result	First offense involving a post-race test result	Second offense within a 365-day period in any racing jurisdiction involving a pre-race or a post-race test result	Third offense within a 365-day period in any racing jurisdiction involving a pre-race or a post-race test result	Subsequent offenses within a 365-day period in any racing jurisdiction involving a pre-race or a post-race test result
No Penalty.	***No Penalty.***	Disqualification and loss of purse; AND If same horse as first offense, horse shall be ineligible from fifteen (15) to sixty (60) days.	Disqualification and loss of purse; AND If same horse as first and second offenses, horse shall be ineligible from sixty (60) to 180 days.	Disqualification and loss of purse; AND If same horse as first, second, and third offenses, horse shall be ineligible from 180 to 365 days.

Section 7. Shock Wave Machine and Blood Gas Machine Penalties. Penalties for violations of 811 KAR 1:090, Section 20(5), (9), or (10) shall be as follows:

(1) TRAINER

First offense	Second lifetime offense in any racing jurisdiction	Third lifetime offense in any racing jurisdiction
Thirty (30) to sixty (60) day suspension; AND $1,000 to $5,000 fine.	Sixty (60) to 180 day suspension; AND $5,000 to $10,000 fine.	180 to 365 day suspension; AND $10,000 to $20,000 fine.

(2) OWNER

First offense	Second lifetime offense in any racing jurisdiction	Third lifetime offense in any racing jurisdiction
Disqualification and loss of purse.	Disqualification and loss of purse; AND If same horse as first offense, horse shall be placed on the stewards' list from fifteen (15) to sixty (60) days and may be required to pass a commission-approved examination before being eligible to enter as determined by the judges.	Disqualification and loss of purse; AND If same horse as first and second offenses, horse shall be placed on the judges' list from sixty (60) to 180 days and may be required to pass a commission-approved examination before being eligible to enter as determined by the judges.

Section 8. Out-of-Competition Testing. The penalties established in 811 KAR 1:240, Section 8, shall apply to violations involving the prohibited substances and practices described in Section 2 of that administrative regulation.[~~(1) Class A drug. A horse that tests positive for a Class A drug shall be disqualified and listed as unplaced and all purse money shall be forfeited. In addition, a licensee who administers, or is a party to or responsible for administering a Class A drug to a horse, shall be subject to the following penalties as deemed appropriate by the commission in keeping with the seriousness of the violation and the facts of the case:~~

~~(a) For a first offense:~~

~~1. A minimum one (1) year suspension, absent mitigating circumstances. The presence of aggravating factors may be used to impose a maximum of a three (3) year suspension or revocation. Section 9 of this administrative regulation shall apply to any person whose licensing privileges have been suspended or revoked; and~~

~~2. Payment of a fine of $5,000 to $10,000.~~

~~(b) For a second offense:~~

~~1. A minimum three (3) year suspension or revocation, absent mitigating circumstances. The presence of aggravating factors may be used to impose a maximum of a five (5) year suspension or revocation. Section 9 of this administrative regulation shall apply to any person whose licensing privileges have been suspended or revoked; and~~

~~2. Payment of a fine of $10,000 to $20,000.~~

~~(c) For a third lifetime offense in any racing jurisdiction:~~

~~1. A minimum five (5) year suspension or revocation, absent mitigating circumstances. The presence of aggravating factors may~~

~~be used to impose a maximum of a lifetime revocation. Section 9 of this administrative regulation shall apply to any person whose licensing privileges have been suspended or revoked; and~~

~~2. Payment of a fine of $20,000 to $50,000.~~

~~(d) Horse ineligible. A horse that tests positive for a Class A drug shall be ineligible to race in Kentucky as follows:~~

~~1. For a first offense, the horse shall be ineligible from zero days to sixty (60) days;~~

~~2. For a second offense in a horse owned by the same owner, the horse shall be ineligible from sixty (60) days to 180 days; and~~

~~3. For a third offense in a horse owned by the same owner, the horse shall be ineligible from 180 days to 240 days.~~

~~(2) Class B drug. A horse that tests positive for a Class B drug shall be disqualified and listed as unplaced and all purse money shall be forfeited. In addition a licensee who administers, or is a party to or is responsible for administering a Class B drug to a horse shall be subject to the following penalties as deemed appropriate by the commission in keeping with the seriousness of the violation and the facts of the case:~~

~~(a) For a first offense:~~

~~1. A minimum fifteen (15) day suspension, absent mitigating circumstances. The presence of aggravating factors may be used to impose a maximum of a sixty (60) day suspension. Section 9 of this administrative regulation shall apply to any person whose licensing privileges have been suspended or revoked; and~~

~~2. Payment of a fine of $500 to $1,000.~~

~~(b) For a second offense within a 365-day period in any racing jurisdiction:~~

~~1. A minimum sixty (60) day suspension, absent mitigating circumstances. The presence of aggravating factors may be used to impose a maximum of a 180 day suspension. Section 9 of this administrative regulation shall apply to any person whose licensing privileges have been suspended or revoked; and~~

~~2. Payment of a fine of $1,000 to $2,500.~~

~~(c) For a third offense within a 365-day period in any racing jurisdiction:~~

~~1. A minimum 180 day suspension, absent mitigating circumstances. The presence of aggravating factors may be used to impose a maximum of a one (1) year suspension. Section 9 of this administrative regulation shall apply to the person whose licensing privileges have been suspended or revoked; and~~

~~2. Payment of a fine of $2,500 to $5,000.~~

~~(d) Horse ineligible. A horse that tests positive for a Class B drug shall be ineligible to race in Kentucky as follows:~~

~~1. For a first offense, the horse shall be ineligible from zero days to sixty (60) days;~~

~~2. For a second offense in a horse owned by the same owner, the horse shall be ineligible from sixty (60) days to 180 days; and~~

~~3. For a third offense in a horse owned by the same owner, the horse shall be ineligible from 180 days to 240 days.~~

~~(3) Class C drug or overage of either permitted NSAID flunixin or ketoprofen.~~

~~(a) The following licensees shall be subject to the penalties in paragraphs (b) through (d) of this subsection as deemed appropriate by the commission in keeping with the seriousness of the violation and the facts of the case:~~

~~1. A licensee who administers, or is a party to or responsible for administering a Class C drug to a horse, in violation of 810 KAR 1:090; and~~

~~2. A licensee who is responsible for an overage of either permitted NSAID flunixin or ketoprofen in the following concentrations in violation of 811 KAR 1:090:~~

~~a. Flunixin, greater than 100 ng/ml; or~~

~~b. Ketoprofen, greater than fifty (50) ng/ml.~~

~~(b) For a first offense:~~

~~1. A suspension or revocation of licensing privileges from zero days to ten (10) days;~~

~~2. Payment of a fine of $250 to $500; and~~

~~3. Forfeiture of purse money won.~~

~~(c) For a second offense within a 365-day period:~~

~~1. A suspension or revocation of licensing privileges from ten (10) days to thirty (30) days;~~

~~2. Payment of a fine of $500 to $1,000; and~~

~~3. Forfeiture of purse money won.~~

~~(d) For a third offense within a 365-day period:~~

~~1. A suspension or revocation of licensing privileges from thirty (30) days to sixty (60) days;~~

~~2. Payment of a fine of $1,000 to $2,500; and~~

~~3. Forfeiture of purse money won.~~

~~(e)1. Notwithstanding paragraphs (a) through (d) of this subsection, a licensee who administers, or is a party to or responsible for an overage of either permitted NSAID flunixin or ketoprofen in the following concentrations shall be subject to the penalties in subparagraphs 2 through 4 of this paragraph as deemed appropriate by the commission in keeping with the seriousness of the violation and the facts of the case:~~

~~a. Flunixin (21-99 ng/ml); or~~

~~b. Ketoprofen (11-49 ng/ml).~~

~~2. For a first offense:~~

~~a. A suspension or revocation of licensing privileges from zero days to five (5) days; and~~

~~b. Payment of a fine of $250 to $500.~~

~~3. For a second offense within a 365-day period:~~

~~a. A suspension or revocation of licensing privileges from five (5) days to ten (10) days; and~~

~~b. Payment of a fine of $500 to $1,000.~~

~~4. For a third offense within a 365-day period:~~

~~a. A suspension or revocation of licensing privileges from ten (10) days to fifteen (15) days.~~

~~b. Payment of a fine of $1,000 to $2,500; and~~

~~c. Forfeiture of purse money won.~~

~~(4) Overage of Permitted NSAID Phenylbutazone.~~

~~(a) A licensee who administers, or is a party to or responsible for an overage of the permitted NSAID phenylbutazone in a concentration of greater than two (2.0) mcg/ml and less than 5.1 mcg/ml shall be subject to the following penalties as deemed appropriate by the commission in keeping with the seriousness of the violation and the facts of the case:~~

~~1. For a first offense:~~

~~a. Minimum penalty of a written warning up to a maximum penalty of a $500 fine; and~~

~~b. The horse may not be eligible to enter until it has been approved for racing by the commission veterinarian.~~

~~2. For a second offense within a 365-day period:~~

~~a. Minimum penalty of a written warning up to a maximum penalty of a $750 fine; and~~

~~b. The horse shall not be eligible to enter until it has been approved for racing by the commission veterinarian.~~

~~3. For a third offense within a 365-day period:~~

~~a. A fine of $500 to $1,000;~~

~~b. Forfeiture of purse money won;~~

~~c. The horse shall be disqualified and listed as unplaced; and~~

~~d. The horse shall not be eligible to enter until it has been approved for racing by the commission veterinarian.~~

~~(b) A licensee who administers, or is a party to or responsible for an overage of the permitted NSAID Phenylbutazone in a concentration of greater than five (5.0) mcg/ml shall be subject to the following penalties as deemed appropriate by the commission in keeping with the seriousness of the violation and the facts of the case:~~

~~1. For a first offense, payment of a fine from $1,000 to $1,500.~~

~~2. For a second offense within a 365-day period:~~

~~a. Payment of a fine from $1,500 to $2,500;~~

~~b. A suspension of licensing privileges for fifteen (15) days, unless the stewards or the commission finds mitigating circumstances;~~

~~c. Forfeiture of purse money won; and~~

~~d. The horse shall be disqualified and listed as unplaced.~~

~~3. For a third offense within a 365-day period:~~

~~a. A fine of $2,500 to $5,000;~~

~~b. A suspension of licensing privileges for thirty (30) days, unless the stewards or the commission finds mitigating circumstances;~~

~~c. Forfeiture of purse money won; and~~

~~d. The horse shall be disqualified and listed as unplaced.~~

~~(5) Multiple NSAIDs. A licensee who is responsible for an~~

~~overage of two (2) of the permitted NSAIDs flunixin, ketoprofen, or phenylbutazone shall be subject to the following penalties as deemed appropriate by the commission in keeping with the seriousness of the violation and the facts of the case:~~

~~(a) For violations where the concentrations of both of the two (2) permitted NSAIDs is above the primary thresholds:~~

~~1. For a first offense:~~

~~a. A suspension or revocation of licensing privileges from zero days to sixty (60) days. Section 9 of this administrative regulation shall apply to a person whose licensing privileges have been suspended or revoked;~~

~~b. Payment of a fine of $500 to $1,000; and~~

~~c. Forfeiture of purse money won.~~

~~2. For a second offense within a 365-day period:~~

~~a. A suspension or revocation of licensing privileges from sixty (60) days to 180 days. Section 9 of this administrative regulation shall apply to a person whose licensing privileges have been suspended or revoked;~~

~~b. Payment of a fine of $1,000 to $2,500; and~~

~~c. Forfeiture of purse money won.~~

~~3. For a third offense within a 365-day period:~~

~~a. A suspension or revocation of licensing privileges from 180 days to one (1) year. Section 9 of this administrative regulation shall apply to a person whose licensing privileges have been suspended or revoked;~~

~~b. Payment of a fine of $2,500 to $5,000; and~~

~~c. Forfeiture of purse money won.~~

~~(b) For violations where the concentration of one (1) of the two (2) permitted NSAIDs is above the primary threshold and one (1) of the two (2) permitted NSAIDs is above the secondary threshold:~~

~~1. For a first offense:~~

~~a. A suspension or revocation of licensing privileges from zero days to fifteen (15) days. Section 9 of this administrative regulation shall apply to a person whose licensing privileges have been suspended or revoked;~~

~~b. Payment of a fine of $250 to $750; and~~

~~c. Forfeiture of purse money won.~~

~~2. For a second offense within a 365-day period:~~

~~a. A suspension or revocation of licensing privileges from fifteen (15) days to thirty (30) days. Section 9 of this administrative regulation shall apply to a person whose licensing privileges have been suspended or revoked;~~

~~b. Payment of a fine of $750 to $1,500; and~~

~~c. Forfeiture of purse money won.~~

~~3. For a third offense within a 365-day period:~~

~~a. A suspension or revocation of licensing privileges from thirty (30) days to sixty (60) days. Section 9 of this administrative regulation shall apply to a person whose licensing privileges have been suspended or revoked;~~

~~b. Payment of a fine of $1,500 to $3,000; and~~

~~c. Forfeiture of purse money won.~~

~~(c) For violations where the concentrations of both of the two (2) permitted NSAIDs are below the primary threshold and both of the two (2) permitted NSAIDs are above the secondary threshold:~~

~~1. For a first offense:~~

~~a. A suspension or revocation of licensing privileges from zero to five (5) days. Section 9 of this administrative regulation shall apply to a person whose licensing privileges have been suspended or revoked; and~~

~~b. Payment of a fine of $250 to $500.~~

~~2. For a second offense within a 365-day period:~~

~~a. A suspension or revocation of licensing privileges from five (5) days to ten (10) days. Section 9 of this administrative regulation shall apply to a person whose licensing privileges have been suspended or revoked; and~~

~~b. Payment of a fine of $500 to $1,000.~~

~~3. For a third offense within a 365-day period:~~

~~a. A suspension or revocation of licensing privileges from ten (10) days to fifteen (15) days. Section 9 of this administrative regulation shall apply to a person whose licensing privileges have been suspended or revoked; and~~

~~b. Payment of a fine of $1,000 to $2,500.~~

~~(6) Class D drug.~~

~~(a) The penalty for a violation involving a Class D drug shall be a written warning to the trainer and owner.~~

~~(b) Multiple violations involving a Class D drug may result in the following penalties as deemed appropriate by the commission in keeping with the seriousness of the violation and the facts of the case:~~

~~1. A suspension of licensing privileges from zero days to five (5) days; and~~

~~2. Payment of a fine of not more than $250.~~

~~Section 6. Out-of-Competition Testing. The penalties established in 811 KAR 1:240, Section 8, shall apply to violations involving the prohibited substances and practices described in Section 2 of that administrative regulation.~~

~~Section 7. TCO2 penalties. A person who violates or causes the violation of 811 KAR 1:090, Section 20(6), (7), or (8), shall be subject to the following penalties as deemed appropriate by the commission in keeping with the seriousness of the violation and the facts of the case:~~

~~(1) For a first offense involving a positive pre-race test result, the licensee shall be issued a warning.~~

~~(2) For a first offense involving a positive post-race test result:~~

~~(a) A suspension or revocation of licensing privileges from zero days to ninety (90) days. Section 9 of this administrative regulation shall apply to any person whose licensing privileges have been suspended or revoked; and~~

~~(b) Payment of a fine of $1,000 to $1,500.~~

~~(3) For a second offense involving a positive pre-race or post-race test result:~~

~~(a) A suspension or revocation of licensing privileges from three (3) months to six (6) months. Section 9 of this administrative regulation shall apply to any person whose licensing privileges have been suspended or revoked;~~

~~(b) Payment of a fine of $1,500 to $3,000; and~~

~~(c) Forfeiture of purse money won.~~

~~(4) For a third offense involving a positive pre-race or post-race test result:~~

~~(a) A suspension or revocation of licensing privileges from six (6) months to one (1) year. Section 9 of this administrative regulation shall apply to any person whose licensing privileges have been suspended or revoked;~~

~~(b) Payment of a fine of $3,000 to $5,000; and~~

~~(c) Forfeiture of purse money won.~~

~~(5) Subsequent offenses:~~

~~(a) A suspension or revocation of licensing privileges from one (1) year up to a lifetime license revocation; and~~

~~(b) Forfeiture of purse money won.~~

~~(6) Horse ineligible. A horse that registers a TCO2 level in violation of 811 KAR 1:090 shall be ineligible to race in Kentucky as follows:~~

~~(a) For a first offense, no period of ineligibility;~~

~~(b) For a second offense, the horse shall be ineligible from fifteen (15) days to sixty (60) days;~~

~~(c) For a third offense, the horse shall be ineligible from sixty (60) days to 180 days; and~~

~~(d) For a fourth offense, the horse shall be ineligible from 180 days to one (1) year.~~

~~(7) In any instance of a positive pre-race TCO2 test result, the horse shall be scratched.~~

~~Section 8. Shock Wave Machine and Blood Gas Machine Penalties. A person who violates or causes a violation of 811 KAR 1:090, Section 20(5), (9), or (10), regarding a shock wave machine or blood gas machine shall be subject to the following penalties as deemed appropriate by the commission in keeping with the seriousness of the violation and the facts of the case:~~

~~(1) For a first offense:~~

~~(a) A suspension or revocation of licensing privileges from thirty (30) days to ninety (90) days;~~

~~(b) Payment of a fine of $1,000 to $5,000; and~~

~~(c) Forfeiture of purse money won.~~

~~(2) For a second offense:~~

~~(a) A suspension or revocation of licensing privileges from ninety (90) days to 180 days;~~

~~(b) Payment of a fine of $5,000 to $10,000; and~~

~~(c) Forfeiture of purse money won.~~

~~(3) For a third offense:~~

~~(a) A suspension or revocation of licensing privileges from 180 days to one (1) year;~~

~~(b) Payment of a fine of $10,000 to $20,000; and~~

~~(c) Forfeiture of purse money won.~~]

Section 9. Persons with a Suspended or Revoked License. (1) A person shall not train a horse or practice veterinary medicine for the benefit, credit, reputation, or satisfaction of an inactive person. The partners in a veterinary practice may provide services to horses if the inactive person does not receive a pecuniary benefit from those services.

(2) An associated person of an inactive person shall not:

(a) Assume the inactive person's responsibilities at a location under the jurisdiction of the commission;

(b) Complete an entry form for a race to be held in Kentucky on behalf of or for the inactive person or an owner or customer for whom the inactive person has worked; or

(c) Pay or advance an entry fee for a race to be held in Kentucky on behalf of or for the inactive person or an owner or customer for whom the inactive person has worked.

(3) An associated person who assumes the responsibility for the care, custody, or control of an unsuspended horse owned (fully or partially), leased, or trained by an inactive person shall not:

(a) Be paid a salary directly or indirectly by or on behalf of the inactive person;

(b) Receive a bonus or any other form of compensation in cash, property, or other remuneration or consideration;

(c) Make a payment or give remuneration or other compensation or consideration to the inactive person or associated person; or

(d) Train or perform veterinary work for the inactive person or an owner or customer of the inactive person at a location under the jurisdiction of the commission.

(4) A person who is responsible for the care, training or veterinary services provided to a horse formerly under the care, training or veterinary services of an inactive person shall:

(a) Bill customers directly on his or her bill form for any services rendered at or in connection with any race meeting in Kentucky;

(b) Maintain a personal checking account totally separate from and independent of that of the inactive person to be used to pay expenses of and deposit income from an owner or client of the inactive person;

(c) Not use the services, directly or indirectly, of current employees of the inactive person; and

(d) Pay bills related to the care, training and racing of the horse from a separate and independent checking account. Copies of the invoices for the expenses shall be retained for not less than six (6) months after the date of the reinstatement of the license of the inactive person or the expiration of the suspension of the inactive person's license.

Section 10. Other Disciplinary Measures. (1) A person who violates 811 KAR 1:090, Section 6, regarding furosemide on race day shall be treated the same as a person who has committed a Class C drug violation.

(2) A person who violates 811 KAR 1:090, Section 8(6), for administering a non-steroidal anti-inflammatory drug other than phenylbutazone or flunixin shall be treated the same as a person who has committed a Class C drug violation.

(3) A person who violates 811 KAR 1:090, Section 20(2), shall be treated the same as a person who has committed a drug violation of the same class, as determined by the commission after consultation with the Equine Drug Research Council.

(4) A person who violates 811 KAR 1:090, Section 20(3), shall be treated the same as a person who has committed a Class A drug violation.

(5) An association in violation of Section 2***[~~(19),~~]***(20), (21),***[~~or~~]*** (22)***, or (23)*** of this administrative regulation shall, together with its officers, be subject to a suspension or revocation of licensing privileges for up to thirty (30) days and payment of a fine up to $5,000 in keeping with the seriousness of the violation and the facts of the case.

Section 11. Disciplinary Measures by Judges. Upon finding a violation or an attempted violation of 811 KAR Chapter 1 or KRS Chapter 230, if not otherwise provided for in this administrative regulation, the judges may impose one (1) or more of the following penalties:

(1) If the violation or attempted violation may affect the health or safety of a horse or race participant, or may affect the outcome of a race, declare a horse or a licensee ineligible to race or disqualify a horse or a licensee in a race;

(2) Suspend or revoke a person's licensing privileges for a period of time of not more than five (5) years in proportion to the seriousness of the violation and the facts of the case;

(3) Cause a person, licensed or unlicensed, found to have interfered with, or contributed toward the interference of the orderly conduct of a race or race meeting, or person whose presence is found by the judges to be inconsistent with maintaining the honesty and integrity of the sport of horse racing, to be excluded or ejected from association grounds or from a portion of association grounds; and

(4) Payment of a fine in an amount not to exceed $50,000 as deemed appropriate by the commission in keeping with the seriousness of the violation and the facts of the case.

Section 12. Disciplinary Measures by the Commission. (1) Upon finding a violation or an attempted violation of 811 KAR Chapter 1 or KRS Chapter 230, if not otherwise provided for in this administrative regulation, the commission may impose one (1) or more of the following penalties:

(a) If the violation or attempted violation may affect the health or safety of a horse or race participant, or may affect the outcome of a race, declare a horse or a licensed person ineligible to race or disqualify a horse or a licensed person in a race;

(b) Suspend or revoke a person's licensing privileges for a period of time of not more than five (5) years in proportion to the seriousness of the violation;

(c) Cause a person found to have interfered with or contributed toward the interference of the orderly conduct of a race or race meeting, or person whose presence is found by the commission to be inconsistent with maintaining the honesty and integrity of horse racing, to be excluded or ejected from association grounds or a portion of association grounds; and

(d) Payment of a fine of up to $50,000 as deemed appropriate by the commission in keeping with the seriousness of the violation and the facts of the case.

(2) Upon appeal of a matter determined by the judges the commission may:

(a) Order a hearing de novo of a matter determined by the judges; and

(b) Reverse or revise the judges' ruling in whole or in part, except as to findings of fact by the judges' ruling regarding matters that occurred during or incident to the running of a race and as to the extent of disqualification fixed by the judges for a foul in a race.

ROBERT M. BECK, JR., Chairman
LARRY R. BOND, Acting Secretary

APPROVED BY AGENCY: October 1, 2014

FILED WITH LRC: October 2, 2014 at noon

CONTACT PERSON: Susan B. Speckert, General Counsel, Kentucky Horse Racing Commission, 4063 Iron Works Parkway, Building B, Lexington, Kentucky 40511, phone (859) 246-2040, fax (859) 246-2039.

PUBLIC PROTECTION CABINET
Kentucky Horse Racing Commission
(As Amended at ARRS, December 9, 2014)

811 KAR 2:100. Disciplinary measures and penalties.

RELATES TO: KRS 230.215, 230.260, 230.265, 230.290, 230.300, 230.320, 230.361

STATUTORY AUTHORITY: KRS 230.215, 230.240, 230.260, 230.320

NECESSITY, FUNCTION, AND CONFORMITY: KRS 230.260(8) authorizes the commission to promulgate necessary and reasonable administrative regulations under which racing shall be conducted in Kentucky. This administrative regulation establishes the penalty structure for rule violations and also establishes disciplinary powers and duties of the stewards and the commission.

Section 1. Definitions. (1) "Associated person" means the spouse of an inactive person, or a companion, family member, employer, employee, agent, partnership, partner, corporation, or other entity whose relationship, whether financial or otherwise, with an inactive person would give the appearance that the other person or entity would care for or train a horse or perform veterinarian services on a horse for the benefit, credit, reputation, or satisfaction of the inactive person.

(2) "Class A drug" means a drug, medication, or substance classified as a Class A drug, medication, or substance in the schedule.

(3) "Class B drug" means a drug, medication, or substance classified as a Class B drug, medication, or substance in the schedule.

(4) "Class C drug" means a drug, medication, or substance classified as a Class C drug, medication, or substance in the schedule.

(5) "Class D drug" means a drug, medication, or substance classified as a Class D drug, medication, or substance in the schedule.

(6) "Companion" means a person who cohabits with or shares living accommodations with an inactive person.

(7) "Inactive person" means a trainer or veterinarian who has his or her license denied or suspended or revoked for thirty (30) or more days pursuant to 811 KAR Chapter 2 or KRS Chapter 230.

(8) "NSAID" means a non-steroidal anti-inflammatory drug.

(9) "Primary threshold" means the thresholds for phenylbutazone, flunixin, and ketoprofen provided in 811 KAR 2:096, Section[~~Sections~~] 8(1)(a), (b), and (c), respectively.

(10) "Schedule" means the Kentucky Horse Racing Commission Uniform Drug, Medication, and Substance Classification Schedule as provided in 811 KAR 2:093.

(11) "Secondary threshold" means the thresholds for phenylbutazone and flunixin provided in 811 KAR 2:096, Section 8(3)(b) and (c), respectively.

(12) "Withdrawal guidelines" means the Kentucky Horse Racing Commission Withdrawal Guidelines Thoroughbred, Quarter Horse, Appaloosa**,** and Arabians as provided in 811 KAR 2:093.

Section 2. General Provisions. (1) An alleged violation of the provisions of KRS Chapter 230 relating to Quarter Horse, Appaloosa and Arabian racing or 811 KAR Chapter 2 shall be adjudicated in accordance with 811 KAR 2:105, KRS Chapter 230, and KRS Chapter 13B.

(2) If a drug, medication, or substance is found to be present in a pre-race or post-race sample or possessed or used by a licensee at a location under the jurisdiction of the commission that is not classified in the schedule, the commission may establish a classification after consultation with either or both of the Association of Racing Commissioners International and the Racing and Medication Testing Consortium or their respective successors.

(3) The stewards and the commission shall consider any mitigating or aggravating circumstances properly presented when assessing penalties pursuant to this administrative regulation. A licensee may provide evidence to the stewards or the commission that the licensee complied fully with the withdrawal guidelines as a mitigating factor.

(4)[~~The commission may suspend or revoke the commission-issued license of an owner, trainer, veterinarian, or other licensee.~~

~~(5)~~] A licensee whose license has been suspended or revoked in any racing jurisdiction or a horse that has been deemed ineligible to race in any racing jurisdiction, shall be denied access to locations under the jurisdiction of the commission during the term of the suspension or revocation.

(5)[~~(6)~~] A suspension or revocation shall be calculated in Kentucky racing days, unless otherwise specified by the stewards or the commission in a ruling or order.

(6)[~~(7)~~] A person assessed any penalty, including a written warning, pursuant to this administrative regulation shall have his or her name and the terms of his or her penalty placed on the official Web site of the commission and the Association of Racing Commissioners International, or its successor. If an appeal is pending, that fact shall be so noted.

(7)[~~(8)~~] A horse administered a substance in violation of 811 KAR 2:096 may be required to pass a commission-approved examination as determined by the stewards pursuant to 811 KAR 2:065, Section 10, or be placed on the veterinarian's list pursuant to 811 KAR 2:096, Section 18.

(8)[~~(9)~~](a) A claimed horse may be tested for the presence of prohibited substances if the claimant completes the Request for Post-Race Testing of Claimed Horse form and includes the form in the claim ***blank*** envelope, which is[~~requests the test when the claim form is completed and~~] deposited in the association's claim box. The request shall not be valid if the form is not filled out completely and included in the claim envelope. The claimant shall bear the costs of the test. The results of the test shall be reported to the chief state steward.

(b) A person who claims a horse may void the claim if the post-race or TCO2 test indicates a Class A, B, or C drug violation, or a total carbon dioxide (TC02) level exceeding 37.0 millimoles per liter. If the claim is voided, the person claiming the horse shall then be entitled to reimbursement from the previous owner of all reasonable costs associated with the claiming process and the post-race or TCO2 testing, including the costs of transportation, board, training, veterinary or other medical services, testing, and any other customary or associated costs or fees.

(c) While awaiting test results, a claimant:

1. Shall exercise due care in maintaining and boarding a claimed horse; and

2. Shall not materially alter a claimed horse.

(9)[~~(10)~~] To protect the racing public and ensure the integrity of racing in Kentucky, a trainer whose penalty for a Class A violation or for a Class B third offense violation has not been fully and finally adjudicated may, if stall space is available, be required to house a horse that the trainer has entered in a race in a designated stall for the twenty-four (24) hour period prior to post time of the race in which the horse is entered. If the stewards require the trainer's horse to be kept in a designated stall, there shall be twenty-four (24) hour surveillance of the horse by the association, and the cost shall be borne by the trainer.

(10) In addition to the penalties contained in Section 4 of this administrative regulation for the trainer and owner, any other person who administers, is a party to, facilitates, or is found to be responsible for any violation of 811 KAR 2:096 shall be subject to the relevant penalty as provided for the trainer or other penalty as may be appropriate based upon the violation.

(11) A veterinarian who administers,[~~or~~] is a party to,[~~or~~] facilitates[~~the administration of~~], or is found to be responsible for any[~~the administration of a Class A drug to a horse, in~~] violation of KRS Chapter 230 or 811 KAR Chapter 2[~~2:096, or who has engaged in prohibited practices in violation of 811 KAR 2:096,~~] shall be reported to the Kentucky Board of Veterinary Examiners and the state licensing Board of Veterinary Medicine by the stewards.

(12) ***In accordance with KRS 230.320(6),*** an administrative action or the imposition of penalties pursuant to this administrative regulation shall not constitute a bar or be considered jeopardy to prosecution of an act that violates the criminal statutes of

Kentucky.

(13) If a person is charged with committing multiple or successive overages involving a Class C or D drug, the stewards or the commission may charge the person with only one (1) offense if the person demonstrates that he or she was not aware that overages were being administered because the positive test results showing the overages were unavailable to the person charged. In this case, the person alleging that he or she was not aware of the overages shall bear the burden of proving that fact to the stewards or the commission.

(14) If a penalty for a medication violation requires a horse to be placed on the stewards' list for a period of time, the stewards may waive this requirement if ownership of the horse was legitimately transferred prior to the trainer's notification by the commission of the positive test result.

Section 3. Prior Offenses. A prior offense occurring in Kentucky or any other racing jurisdiction shall be considered by the stewards and by the commission in assessing penalties. The stewards shall attach to a penalty judgment a copy of the offender's prior record containing violations that were committed both inside and outside of Kentucky.

Section 4. Penalties for Class A, B, C, and D Drug Violations and NSAID and Furosemide Violations. (1) Class A drug.

(a) TRAINER

First offense	Second lifetime offense in any racing jurisdiction	Third lifetime offense in any racing jurisdiction
One (1) to three (3) year suspension; AND $10,000 to $25,000 fine.	Three (3) to five (5) year suspension; AND $25,000 to $50,000 fine.	Five (5) year suspension to a lifetime ban; AND $50,000 to $100,000 fine.

(b) OWNER

First offense	Second lifetime offense in any racing jurisdiction in a horse owned by the same owner	Third lifetime offense in any racing jurisdiction in a horse owned by the same owner
Disqualification and loss of purse; AND Horse shall be placed on the stewards' list for sixty (60) days and may be required to pass a commission-approved examination before being eligible to enter as determined by the stewards.	Disqualification and loss of purse; AND Horse shall be placed on the stewards' list for 120 days and may be required to pass a commission-approved examination before being eligible to enter as determined by the stewards.	Disqualification and loss of purse; AND Ninety (90) day suspension; AND $50,000 fine; AND Horse shall be placed on the stewards' list for 180 days and may be required to pass a commission-approved examination before being eligible to enter as determined by the stewards.

(2) Class B drug.

(a) TRAINER

First offense	Second offense within a 365-day period in any racing jurisdiction	Third offense within a 365-day period in any racing jurisdiction
Thirty (30) to sixty (60) day suspension; AND $500 to $1,000 fine.	Sixty (60) to 180 day suspension; AND $1,000 to $2,500 fine.	180 to 365 day suspension; AND $2,500 to $5,000 fine.

(b) OWNER

First offense	Second offense within a 365-day period in any racing jurisdiction in a horse owned by the same owner	Third offense within a 365-day period in any racing jurisdiction in a horse owned by the same owner
Disqualification and loss of purse; AND Horse may be required to pass a commission-approved examination before being eligible to enter as determined by the stewards.	Disqualification and loss of purse; AND Horse may be required to pass a commission-approved examination before being eligible to enter as determined by the stewards.	Disqualification and loss of purse; AND Horse shall be placed on the stewards' list for forty-five (45) days and may be required to pass a commission-approved examination before being eligible to enter as determined by the stewards.

(3)(a) The penalties established in paragraphs (b) and (c) of this subsection shall apply to a Class C drug violation and an overage of permitted NSAIDs as follows:

1. Phenylbutazone in a concentration greater than 5.0 mcg/ml;
2. Flunixin in a concentration greater than 100 ng/ml; and
3. Ketoprofen in a concentration greater than 50 ng/ml.

(b) TRAINER

First offense	Second offense within a 365-day period in any racing jurisdiction	Third offense within a 365-day period in any racing jurisdiction
Zero to ten (10) day suspension; AND $500 to $1,500 fine.	Ten (10) to thirty (30) day suspension; AND $1,500 to $2,500 fine.	Thirty (30) to sixty (60) day suspension; AND $2,500 to $5,000 fine.

(c) OWNER

First offense	Second offense within a 365-day period in any racing jurisdiction	Third offense within a 365-day period in any racing jurisdiction
Disqualification and loss of purse; AND Horse may be required to pass a commission-approved examination before being eligible to enter as determined by the stewards.	Disqualification and loss of purse; AND If same horse as first offense, horse shall be placed on the stewards' list for forty-five (45) days and may be required to pass a commission-approved examination before being eligible to enter as determined by the stewards.	Disqualification and loss of purse; AND $5,000 fine; AND If same horse as first and second offenses, horse shall be placed on the stewards' list for sixty (60) days and may be required to pass a commission-approved examination before being eligible to enter as determined by the stewards.

(4)(a)The penalties established in paragraphs (b) and (c) of this subsection shall apply to the following:

1. Overage of permitted NSAIDs as follows:

a. Phenylbutazone in a concentration ***greater than 2 mcg/ml through 5[~~of 2-5~~]*** mcg/ml;

b. Flunixin in a concentration ***greater than 20 ng/ml through 100[~~of 21-99~~]*** ng/ml; and

c. Ketoprofen in a concentration ***greater than 10 ng/ml through 50[~~of 11-49~~]*** ng/ml;

2. Overage of furosemide in a concentration greater than 100 ng/ml; and

3. Furosemide not identified when notice made that the horse would run on furosemide.

(b) TRAINER

First offense	Second offense within a 365-day period in any racing jurisdiction	Third offense within a 365-day period in any racing jurisdiction
Written warning to a $500 fine.	Written warning to a $750 fine.	$500 to $1,000 fine.

(c) OWNER

First offense	Second offense within a 365-day period in any racing jurisdiction	Third offense within a 365-day period in any racing jurisdiction
Horse may be required to pass a commission-approved examination before being eligible to enter as determined by the stewards.	Horse may be required to pass a commission-approved examination before being eligible to enter as determined by the stewards.	If same horse as first and second offenses, disqualification and loss of purse; AND Horse may be required to pass a commission-approved examination before being eligible to enter as determined by the stewards.

(d) If a furosemide violation occurs due solely to the actions or inactions of the commission veterinarian, then the trainer and owner shall not be penalized.

(5) Multiple NSAIDs. Overage of two (2) permitted NSAIDs phenylbutazone, flunixin, and ketoprofen.

(a) TRAINER

	Concentrations of both permitted NSAIDs above the primary threshold.	Concentrations of one (1) permitted NSAID above the primary threshold and one (1) above the secondary threshold.	Concentrations of both permitted NSAIDs below primary threshold and above secondary threshold.
First offense	Zero to sixty (60) day suspension; AND $500 to $1,000 fine.	Zero to fifteen (15) day suspension; AND $250 to $750 fine.	Zero to five (5) day suspension; AND $250 to $500 fine.
Second offense within a 365-day period in any racing jurisdiction	Sixty (60) to 180 day suspension; AND $1,000 to $2,500 fine.	Fifteen (15) to thirty (30) day suspension; AND $750 to $1,500 fine.	Five (5) to ten (10) day suspension; AND $500 to $1,000 fine.
Third offense within a 365-day period in any racing jurisdiction	180 to 365 day suspension; AND $2,500 to $5,000 fine.	Thirty (30) to sixty (60) day suspension; AND $1,500 to $3,000 fine.	Ten (10) to fifteen (15) day suspension; AND $1,000 to $2,500 fine.

(b) OWNER

	Concentrations of both permitted NSAIDs above the primary threshold.	Concentrations of one (1) permitted NSAID above the primary threshold and one (1) above the secondary threshold.	Concentrations of both permitted NSAIDs below primary threshold and above secondary threshold.
First offense	Disqualification and loss of purse.	Disqualification and loss of purse.	***No Penalty.***
Second offense within a 365-day period in any racing jurisdiction	Disqualification and loss of purse.	Disqualification and loss of purse.	***No Penalty.***
Third offense within a 365-day period in any racing jurisdiction	Disqualification and loss of purse.	Disqualification and loss of purse.	***No Penalty.***

(6) Class D Drug.

(a) The penalties established in paragraph (b) of this subsection shall apply to a Class D drug violation.

(b) TRAINER

One (1) to four (4) offenses within a 365-day period in any racing jurisdiction	Five (5) or more offenses within a 365-day period in any racing jurisdiction
Zero to five (5) day suspension; AND $250 to $500 fine.	Five (5) to ten (10) day suspension; AND $500 to $1,000 fine.

Section 5. TCO2 Penalties. Penalties for violations of 811 KAR 2:096, Section 20(6), (7), ***or*** (8) shall be as follows:

(1) TRAINER

First offense	Second offense within a 365-day period in any racing jurisdiction	Third offense within a 365-day period in any racing jurisdiction	Subsequent offenses within a 365-day period in any racing jurisdiction
Zero to ninety (90) day suspension; AND $1,000 to $1,500 fine.	Ninety (90) to 180 day suspension; AND $1,500 to $3,000 fine.	180 to 365 day suspension; AND $3,000 to $5,000 fine.	One (1) year suspension to lifetime ban.

(2) OWNER

First offense	Second offense within a 365-day period in any racing jurisdiction	Third offense within a 365-day period in any racing jurisdiction	Subsequent offenses within a 365-day period in any racing jurisdiction
Disqualification and loss of purse.	Disqualification and loss of purse; AND If same horse as first offense, horse shall be placed on the stewards' list from fifteen (15) to sixty (60) days and may be required to pass a commission-approved examination before being eligible to enter as determined by the stewards.	Disqualification and loss of purse; AND If same horse as first and second offenses, horse shall be placed on the stewards' list from sixty (60) to 180 days and may be required to pass a commission-approved examination before being eligible to enter as determined by the stewards.	Disqualification and loss of purse; AND If same horse as first, second, and third offenses, horse shall be placed on the stewards' list from 180 to 365 days and may be required to pass a commission-approved examination before being eligible to enter as determined by the stewards.

Section 6. Shock Wave Machine and Blood Gas Machine Penalties. Penalties for violations of 811 KAR 2:096, Section 20(5), (9), or (10), shall be as follows:

(1) TRAINER

First offense	Second lifetime offense in any racing jurisdiction	Third lifetime offense in any racing jurisdiction
Thirty (30) to sixty (60) day suspension; AND $1,000 to $5,000 fine.	Sixty (60) to 180 day suspension; AND $5,000 to $10,000 fine.	180 to 365 day suspension; AND $10,000 to $20,000 fine.

(2) OWNER

First offense	Second lifetime offense in any racing jurisdiction	Third lifetime offense in any racing jurisdiction
Disqualification and loss of purse.	Disqualification and loss of purse; AND If same horse as first offense, horse shall be placed on the stewards' list from fifteen (15) to sixty (60) days and may be required to pass a commission-approved examination before being eligible to enter as determined by the stewards.	Disqualification and loss of purse; AND If same horse as first and second offenses, horse shall be placed on the stewards' list from sixty (60) to 180 days and may be required to pass a commission-approved examination before being eligible to enter as determined by the stewards.

Section 7. Out-of-Competition Testing. The penalties established in 811 KAR 2:150, Section 8, shall apply to violations involving the prohibited substances and practices described in Section 2 of that administrative regulation.[~~Section 4. Penalties for Class A, B, C, and D Drug Violations and NSAID and Furosemide Violations. (1) Class A drug. A horse that tests positive for a Class A drug shall be disqualified and listed as unplaced and all purse money shall be forfeited. In addition, a licensee who administers, or is a party to or responsible for administering a Class A drug to a horse shall be subject to the following penalties as deemed appropriate by the commission in keeping with the seriousness of the violation and the facts of the case:~~

~~(a) For a first offense:~~

~~1. A minimum one (1) year suspension, absent mitigating circumstances. The presence of aggravating factors may be used to impose a maximum of a three (3) year suspension or revocation. Section 8 of this administrative regulation shall apply to the person whose licensing privileges have been suspended or revoked; and~~

~~2. Payment of a fine of $5,000 to $10,000.~~

~~(b) For a second lifetime offense in any racing jurisdiction:~~

~~1. A minimum three (3) year suspension or revocation, absent mitigating circumstances. The presence of aggravating factors may be used to impose a maximum of a five (5) year suspension or revocation. Section 8 of this administrative regulation shall apply to the person whose licensing privileges have been suspended or revoked; and~~

~~2. Payment of a fine of $10,000 to $20,000.~~

~~(c) For a third lifetime offense in any racing jurisdiction:~~

~~1. A minimum five (5) year suspension or revocation, absent mitigating circumstances. The presence of aggravating factors may be used to impose a maximum of a lifetime revocation. Section 8 of~~

~~this administrative regulation shall apply to the person whose licensing privileges have been suspended or revoked; and~~

~~2. Payment of a fine of $20,000 to $50,000.~~

~~(d) Horse ineligible. A horse that tests positive for a Class A drug shall be ineligible to race in Kentucky as follows:~~

~~1. For a first offense, the horse shall be ineligible from zero days to sixty (60) days;~~

~~2. For a second offense in a horse owned by the same owner, the horse shall be ineligible from sixty (60) days to 180 days; and~~

~~3. For a third offense in a horse owned by the same owner, the horse shall be ineligible from 180 days to 240 days.~~

~~(2) Class B drug. A horse that tests positive for a Class B drug shall be disqualified and listed as unplaced and all purse money shall be forfeited. In addition, a licensee who administers, or is a party to or responsible for administering a Class B drug to a horse shall be subject to the following penalties as deemed appropriate by the commission in keeping with the seriousness of the violation and the facts of the case:~~

~~(a) For a first offense:~~

~~1. A minimum fifteen (15) day suspension, absent mitigating circumstances. The presence of aggravating factors may be used to impose a maximum of a sixty (60) day suspension or revocation. Section 8 of this administrative regulation shall apply to a person whose licensing privileges have been suspended or revoked; and~~

~~2. Payment of a fine of $500 to $1,000.~~

~~(b) For a second offense within a 365-day period in any racing jurisdiction:~~

~~1. A minimum sixty (60) day suspension, absent mitigating circumstances. The presence of aggravating factors may be used to impose a maximum of a 180 day suspension. Section 8 of this administrative regulation shall apply to a person whose licensing privileges have been suspended or revoked; and~~

~~2. Payment of a fine of $1,000 to $2,500.~~

~~(c) For a third offense within a 365-day period in any racing jurisdiction:~~

~~1. A minimum 180 day suspension, absent mitigating circumstances. The presence of aggravating factors may be used to impose a maximum of a one (1) year suspension. Section 8 of this administrative regulation shall apply to the person whose licensing privileges have been suspended or revoked; and~~

~~2. Payment of a fine of $2,500 to $5,000.~~

~~(d) Horse ineligible. A horse that tests positive for a Class B drug shall be ineligible to race in Kentucky as follows:~~

~~1. For a first offense, the horse shall be ineligible from zero days to sixty (60) days;~~

~~2. For a second offense in a horse owned by the same owner, the horse shall be ineligible from sixty (60) days to 180 days; and~~

~~3. For a third offense in a horse owned by the same owner, the horse shall be ineligible from 180 days to 240 days.~~

~~(3) Class C drug or overage of either permitted NSAID flunixin or ketoprofen.~~

~~(a)The following licensees shall be subject to the penalties in paragraphs (b) through (d) of this subsection as deemed appropriate by the commission in keeping with the seriousness of the violation and the facts of the case:~~

~~1. A licensee who administers, or is a party to or responsible for administering a Class C drug to a horse, in violation of 811 KAR 2:096; and~~

~~2. A licensee who is responsible for an overage of either permitted NSAID flunixin or ketoprofen in the following concentrations in violation of 811 KAR 2:096:~~

~~a. Flunixin, greater than 100 ng/ml; or~~

~~b. Ketoprofen, greater than 50 ng/ml.~~

~~(b) For a first offense:~~

~~1. A suspension or revocation of licensing privileges from zero days to ten (10) days;~~

~~2. Payment of a fine of $250 to $500; and~~

~~3. Forfeiture of purse money won.~~

~~(c) For a second offense within a 365-day period:~~

~~1. A suspension or revocation of licensing privileges from ten (10) days to thirty (30) days;~~

~~2. Payment of a fine of $500 to $1,000; and~~

~~3. Forfeiture of purse money won.~~

~~(d) For a third offense within a 365-day period:~~

~~1. A suspension or revocation of licensing privileges from thirty (30) days to sixty (60) days;~~

~~2. Payment of a fine of $1,000 to $2,500; and~~

~~3. Forfeiture of purse money won.~~

~~(e) Notwithstanding paragraphs (a) through (d) of this subsection, a licensee who administers, or is a party to or responsible for an overage of either permitted NSAID flunixin or ketoprofen in the following concentrations shall be subject to the following penalties as deemed appropriate by the commission in keeping with the seriousness of the violation and the facts of the case:~~

~~1. Flunixin (21-99 ng/ml); or~~

~~2. Ketoprofen (11-49ng/ml).~~

~~a. For a first offense:~~

~~(i) A suspension or revocation of licensing privileges from zero days to five (5) days; and~~

~~(ii) Payment of a fine of $250 to $500.~~

~~b. For a second offense within a 365-day period:~~

~~(i) A suspension or revocation of licensing privileges from five (5) days to ten (10) days; and~~

~~(ii) Payment of a fine of $500 to $1,000.~~

~~c. For a third offense within a 365-day period:~~

~~(i) A suspension or revocation of licensing privileges from ten (10) days to fifteen (15) days.~~

~~(ii) Payment of a fine of $1,000 to $2,500; and~~

~~(iii) Forfeiture of purse money won.~~

~~(4) Overage of permitted NSAID phenylbutazone.~~

~~(a) A licensee who administers, or is a party to or responsible for an overage of the permitted NSAID phenylbutazone in a concentration of greater than 2.0 mcg/ml and less than 5.1 mcg/ml shall be subject to the following penalties as deemed appropriate by the commission in keeping with the seriousness of the violation and the facts of the case:~~

~~1. For a first offense:~~

~~a. Minimum penalty of a written warning up to a maximum penalty of a $500 fine; and~~

~~b. The horse may not be eligible to enter until it has been approved for racing by the commission veterinarian.~~

~~2. For a second offense within a 365-day period:~~

~~a. Minimum penalty of a written warning up to a maximum penalty of a $750 fine; and~~

~~b. The horse shall not be eligible to enter until it has been approved for racing by the commission veterinarian.~~

~~3. For a third offense within a 365-day period:~~

~~a. A fine of $500 to $1,000;~~

~~b. Forfeiture of purse money won;~~

~~c. The horse shall be disqualified and listed as unplaced; and~~

~~d. The horse shall not be eligible to enter until it has been approved for racing by the commission veterinarian.~~

~~(b) A licensee who administers, or is a party to or responsible for an overage of the permitted NSAID phenylbutazone in a concentration of greater than 5.0 mcg/ml shall be subject to the following penalties as deemed appropriate by the commission in keeping with the seriousness of the violation and the facts of the case:~~

~~1. For a first offense, payment of a fine from $1,000 to $1,500; and~~

~~2. For a second offense within a 365-day period:~~

~~a. Payment of a fine from $1,500 to $2,500;~~

~~b. A suspension of licensing privileges for fifteen (15) days, unless the stewards or the commission finds mitigating circumstances;~~

~~c. Forfeiture of purse money won; and~~

~~d. The horse shall be disqualified and listed as unplaced.~~

~~3. For a third offense within a 365-day period:~~

~~a. A fine of $2,500 to $5,000;~~

~~b. A suspension of licensing privileges for thirty (30) days, unless the stewards or the commission finds mitigating circumstances;~~

~~c. Forfeiture of purse money won; and~~

~~d. The horse shall be disqualified and listed as unplaced.~~

~~(5) Furosemide violations.~~

~~(a) The following licensees shall be subject to the following penalties as deemed appropriate by the commission in keeping with the seriousness of the violation and the facts of the case:~~

~~1. A licensee who administers, or is party to or responsible for administering an overage of furosemide in a concentration greater than 100 ng/ml; and~~

~~2. A licensee who has not administered furosemide when notice has been made that the horse shall run on furosemide pursuant to 811 KAR 2:096, Section 7.~~

~~(b) For a first offense:~~

~~1. A suspension or revocation of licensing privileges from zero days to five (5) days; and~~

~~2. Payment of a fine of $250 to $500.~~

~~(c) For a second offense within a 365-day period:~~

~~1. A suspension or revocation of licensing privileges from five (5) days to ten (10) days; and~~

~~2. Payment of a fine of $500 to $1,000.~~

~~(d) For a third offense within a 365-day period:~~

~~1. A suspension or revocation of licensing privileges from ten (10) days to fifteen (15) days;~~

~~2. Payment of a fine of $1,000 to $2,500; and~~

~~3. Forfeiture of purse money won.~~

~~(6) Multiple NSAIDs. A licensee who is responsible for an overage of two (2) of the permitted NSAIDs flunixin, ketoprofen, or phenylbutazone shall be subject to the following penalties as deemed appropriate by the commission in keeping with the seriousness of the violation and the facts of the case:~~

~~(a) For violations where the concentrations of both of the two (2) permitted NSAIDs is above the primary thresholds:~~

~~1. For a first offense:~~

~~a. A suspension or revocation of licensing privileges from zero days to sixty (60) days. Section 8 of this administrative regulation shall apply to a person whose licensing privileges have been suspended or revoked;~~

~~b. Payment of a fine of $500 to $1,000; and~~

~~c. Forfeiture of purse money won.~~

~~2. For a second offense within a 365-day period:~~

~~a. A suspension or revocation of licensing privileges from sixty (60) days to 180 days. Section 8 of this administrative regulation shall apply to a person whose licensing privileges have been suspended or revoked;~~

~~b. Payment of a fine of $1,000 to $2,500; and~~

~~c. Forfeiture of purse money won.~~

~~3. For a third offense within a 365-day period:~~

~~a. A suspension or revocation of licensing privileges from 180 days to one (1) year. Section 8 of this administrative regulation shall apply to a person whose licensing privileges have been suspended or revoked;~~

~~b. Payment of a fine of $2,500 to $5,000; and~~

~~c. Forfeiture of purse money won.~~

~~(b) For violations where the concentration of one (1) of the two (2) permitted NSAIDs is above the primary threshold and one (1) of the two (2) permitted NSAIDs is above the secondary threshold:~~

~~1. For a first offense:~~

~~a. A suspension or revocation of licensing privileges from zero days to fifteen (15) days. Section 8 of this administrative regulation shall apply to a person whose licensing privileges have been suspended or revoked;~~

~~b. Payment of a fine of $250 to $750; and~~

~~c. Forfeiture of purse money won.~~

~~2. For a second offense within a 365-day period:~~

~~a. A suspension or revocation of licensing privileges from fifteen (15) days to thirty (30) days. Section 8 of this administrative regulation shall apply to a person whose licensing privileges have been suspended or revoked;~~

~~b. Payment of a fine of $750 to $1,500; and~~

~~c. Forfeiture of purse money won.~~

~~3. For a third offense within a 365-day period:~~

~~a. A suspension or revocation of licensing privileges from thirty (30) days to sixty (60) days. Section 8 of this administrative regulation shall apply to a person whose licensing privileges have been suspended or revoked;~~

~~b. Payment of a fine of $1,500 to $3,000; and~~

~~c. Forfeiture of purse money won.~~

~~(c) For violations where the concentrations of both of the two (2) permitted NSAIDs are below the primary threshold and both of the two (2) permitted NSAIDs are above the secondary threshold:~~

~~1. For a first offense:~~

~~a. A suspension or revocation of licensing privileges from zero days to five (5) days. Section 8 of this administrative regulation shall apply to a person whose licensing privileges have been suspended or revoked; and~~

~~b. Payment of a fine of $250 to $500.~~

~~2. For a second offense within a 365-day period:~~

~~a. A suspension or revocation of licensing privileges from five (5) days to ten (10) days. Section 8 of this administrative regulation shall apply to a person whose licensing privileges have been suspended or revoked; and~~

~~b. Payment of a fine of $500 to $1,000.~~

~~3. For a third offense within a 365-day period:~~

~~a. A suspension or revocation of licensing privileges from ten (10) days to fifteen (15) days. Section 8 of this administrative regulation shall apply to a person whose licensing privileges have been suspended or revoked; and~~

~~b. Payment of a fine of $1,000 to $2,500.~~

~~(7) Class D Drug.~~

~~(a) The penalty for a first violation involving a Class D drug shall be a written warning to the trainer and owner.~~

~~(b) For multiple violations involving a Class D drug the licensee may be subject to a suspension of licensing privileges from zero days to five (5) days and a fine of no more than $250 as deemed appropriate by the commission in keeping with the seriousness of the violation and the facts of the case.~~

~~Section 5. Out-of-Competition Testing. The penalties established in 811 KAR 2:150, Section 8, shall apply to violations involving the prohibited substances and practices described in Section 2 of that administrative regulation.~~

~~Section 6. TCO2 penalties. A person who violates or causes the violation of 811 KAR 2:096, Section 20(6), (7), or (8), shall be subject to the following penalties as deemed appropriate by the commission in keeping with the seriousness of the violation and the facts of the case:~~

~~(1) For a first offense:~~

~~(a) A suspension or revocation of licensing privileges from zero days to three (3) months;~~

~~(b)Payment of a fine of $1,000 to $1,500; and~~

~~(c) Forfeiture of purse money won.~~

~~(2) For a second offense:~~

~~(a) A suspension or revocation of licensing privileges from three (3) months to six (6) months;~~

~~(b)Payment of a fine of $1,500 to $3,000; and~~

~~(c) Forfeiture of purse money won.~~

~~(3) For a third offense:~~

~~(a) A suspension or revocation of licensing privileges from six (6) months to one (1) year;~~

~~(b)Payment of a fine of $3,000 to $5,000; and~~

~~(c) Forfeiture of purse money won.~~

~~(4) For subsequent offenses:~~

~~(a) A suspension or revocation of licensing privileges from one (1) year up to a lifetime license revocation; and~~

~~(b) Forfeiture of purse money won.~~

~~(5) Horse ineligible. A horse that registers a TCO2 level in violation of 811 KAR 2:096, Section 20(6), (7), or (8), shall be ineligible to race in Kentucky as follows:~~

~~(a) For a first offense, no period of ineligibility;~~

~~(b) For a second offense in the same horse, the horse shall be ineligible from fifteen (15) days to sixty (60) days;~~

~~(c) For a third offense in the same horse, the horse shall be ineligible from sixty (60) days to 180 days; and~~

~~(d) For a fourth offense in the same horse, the horse shall be ineligible from 180 days to one (1) year.~~

~~Section 7. Shock Wave Machine and Blood Gas Machine Penalties. A person who violates or causes the violation of 811~~

~~KAR 2:096, Section (5), (9), or (10), shall be subject to the following penalties as deemed appropriate by the commission in keeping with the seriousness of the violation and the facts of the case.~~

~~(1) For a first offense:~~

~~(a) A suspension or revocation of licensing privileges from one (1) month to three (3) months;~~

~~(b) Payment of a fine of $1,000 to $5,000; and~~

~~(c) Forfeiture of purse money won.~~

~~(2) For a second offense:~~

~~(a) A suspension or revocation of licensing privileges from three (3) months to six (6) months;~~

~~(b) Payment of a fine of $5,000 to $10,000; and~~

~~(c) Forfeiture of purse money won.~~

~~(3) For a third offense:~~

~~(a) A suspension or revocation of licensing privileges from six (6) months to one (1) year;~~

~~(b) Payment of a fine of $10,000 to $20,000; and~~

~~(c) Forfeiture of purse money won.~~]

Section 8. Persons with a Suspended or Revoked License. (1) A person shall not train a horse or practice veterinary medicine for the benefit, credit, reputation, or satisfaction of an inactive person. The partners in a veterinary practice may provide services to horses if the inactive person does not receive a pecuniary benefit from those services.

(2) An associated person of an inactive person shall not:

(a) Assume the inactive person's responsibilities at a location under the jurisdiction of the commission;

(b) Complete an entry form for a race to be held in Kentucky on behalf of or for the inactive person or an owner or customer for whom the inactive person has worked; or

(c) Pay or advance an entry fee for a race to be held in Kentucky on behalf of or for the inactive person or an owner or customer for whom the inactive person has worked.

(3) An associated person who assumes the responsibility for the care, custody, or control of an unsuspended horse owned (fully or partially), leased, or trained by an inactive person shall not:

(a) Be paid a salary directly or indirectly by or on behalf of the inactive person;

(b) Receive a bonus or any other form of compensation in cash, property, or other remuneration or consideration;

(c) Make a payment or give remuneration or other compensation or consideration to the inactive person or associated person; or

(d) Train or perform veterinarian work for the inactive person or an owner or customer of the inactive person at a location under the jurisdiction of the commission.

(4) A person who is responsible for the care, training, or veterinarian services provided to a horse formerly under the care, training, or veterinarian services of an inactive person shall:

(a) Bill customers directly on his or her bill form for any services rendered at or in connection with any race meeting in Kentucky;

(b) Maintain a personal checking account totally separate from and independent of that of the inactive person to be used to pay expenses of and deposit income from an owner or client of the inactive person;

(c) Not use the services, directly or indirectly, of current employees of the inactive person; and

(d) Pay bills related to the care, training, and racing of the horse from a separate and independent checking account. Copies of the invoices for the expenses shall be retained for not less than six (6) months after the date of the reinstatement of the license of the inactive person or the expiration of the suspension of the inactive person's license.

Section 9. Other Disciplinary Measures. (1) A person who violates 811 KAR 2:096, Section 20(2), shall be treated the same as a person who has committed a drug violation of the same class, as determined by the commission after consultation with the Equine Drug Research Council.

(2) A person who violates 811 KAR 2:096, Section 20(3), shall be treated the same as a person who has committed a Class A drug violation.

Section 10. Disciplinary Measures by Stewards. Upon finding a violation or an attempted violation of the provisions of KRS Chapter 230 relating to Quarter Horse, Appaloosa and Arabian racing or 811 KAR Chapter 2, if not otherwise provided for in this administrative regulation, the stewards may impose one (1) or more of the following penalties:

(1) If the violation or attempted violation may affect the health or safety of the horse or a participant in a race or may affect the outcome of a race, declare a horse or a licensee ineligible to race or disqualify a horse or licensee in a race;

(2) Suspend or revoke a person's licensing privileges for a period of time of not more than five (5) years as may be deemed appropriate by the stewards in keeping with the seriousness of the violation and the facts of the case;

(3) Cause a person, licensed or unlicensed, found to have interfered with, or contributed toward the interference of the orderly conduct of a race or race meeting, or person whose presence is found by the stewards to be inconsistent with maintaining the honesty and integrity of the sport of horse racing to be excluded or ejected from association grounds or from a portion of association grounds; or

(4) Payment of a fine in an amount not to exceed $50,000 as may be deemed appropriate by the stewards in keeping with the seriousness of the violation and the facts of the case.

Section 11. Disciplinary measures by the commission. Upon finding a violation or an attempted violation of the provisions of KRS Chapter 230 relating to Quarter Horse, Appaloosa and Arabian racing or 811 KAR Chapter 2, if not otherwise provided for in this administrative regulation, the commission may impose one (1) or more of the following penalties:

(1) If the violation or attempted violation may affect the health or safety of the horse or a participant in a race or may affect the outcome of a race, declare a horse or a licensee ineligible to race or disqualify a horse or licensee in a race;

(2) Suspend or revoke a person's licensing privileges for a period of time of not more than five (5) years as may be deemed appropriate by the commission in keeping with the seriousness of the violation;

(3) Eject or exclude persons from association grounds for a length of time the commission deems necessary; or

(4) Payment of a fine in an amount not to exceed $50,000 as may be deemed appropriate by the commission in keeping with the seriousness of the violation and the facts of the case.

Section 12. Incorporation by Reference. (1) The following material is incorporated by reference:

(a) "Request for Post-Race Testing of Claimed Horse", August 2014; and

(b) "Claim Blank envelope", 2014.

(2) This material may be inspected, copied, or obtained, subject to applicable copyright law, at the Kentucky Horse Racing Commission, 4063 Iron Works Parkway, Building B, Lexington, Kentucky 40511, Monday through Friday, 8:00 a.m. to 4:30 p.m.

ROBERT M. BECK, JR., Chairman
LARRY R. BOND, Acting Secretary

APPROVED BY AGENCY: October 1, 2014

FILED WITH LRC: October 2, 2014 at noon

CONTACT PERSON: Susan B. Speckert, General Counsel, Kentucky Horse Racing Commission, 4063 Iron Works Parkway, Building B, Lexington, Kentucky 40511, phone (859) 246-2040, fax (859) 246-2039.

PUBLIC PROTECTION CABINET
Office of Occupations and Professions
Board of Home Inspectors
(As Amended at ARRS, December 9, 2014)

815 KAR 6:001. Definitions for 815 KAR Chapter 6.

RELATES TO: KRS ***198B.700(2),*** 198B.706
STATUTORY AUTHORITY: KRS 198B.706***(15)***
NECESSITY, FUNCTION AND CONFORMITY: KRS 198B.706(15) requires the Kentucky Board of Home Inspectors to promulgate administrative regulations necessary to enforce the provisions of KRS 198B.700 to 198B.738 and to establish requirements for continuing education. This administrative regulation establishes the definitions for 815 KAR Chapter 6.

Section 1. Definitions. (1) "Approved" means recognized by the Kentucky Board of Home Inspectors.
(2) "Board" is defined by KRS 198B.700(2).
(3) "Complaint" means a written allegation of misconduct by a home inspector, or other allegation of a violation of KRS Chapter 198B, the requirements established in 815 KAR Chapter 6, or another state or federal statute or regulation applicable to home inspectors.
(4) "Complaint screening committee" means the committee appointed pursuant to 815 KAR 6:060, Section 1.
(5) "Continuing education hour" means fifty (50) clock minutes of instruction, exclusive of any breaks, recesses, testing, or other time not spent in instruction.
(6) "Licensee" is defined by KRS 198B.700(7).
(7) "Prelicensing course provider" means the person or legal entity approved by the board to conduct prelicensing courses in home inspection.
(8) "Probationee" means a licensee, prelicensing course provider, or continuing education provider placed on probation by the board.
(9) "Provider" means the person or legal entity approved by the board to provide continuing education in home inspections.

MITCH BUCHANAN, Board Chair
APPROVED BY AGENCY: August 12, 2014
FILED WITH LRC: August 15, 2014 at 9 a.m.
CONTACT PERSON: Diana Jarboe, Board Administrator, Kentucky Board of Home Inspectors, Division of Occupations and Professions, 911 Leawood Drive, P. O. Box 1360, Frankfort, Kentucky 40601, phone (502) 564-3296, ext. 227, fax (502) 696-4961.

PUBLIC PROTECTION CABINET
Office of Occupations and Professions
Board of Home Inspectors
(As Amended at ARRS, December 9, 2014)

815 KAR 6:010. Home inspector licensing requirements and maintenance of records.

RELATES TO: KRS 198B.700, 198B.706, 198B.712, 198B.714, 198B.716, 198B.722, 198B.724, 198B.738
STATUTORY AUTHORITY: KRS 198B.706, 198B.722
NECESSITY, FUNCTION, AND CONFORMITY: KRS 198B.706(1) and (15) require the Kentucky Board of Home Inspectors to promulgate administrative regulations necessary to enforce the provisions of KRS 198B.700 to 198B.738 and to establish requirements for licensing and certification as well as prescribing forms and applications. KRS 198B.706(7) requires the board to promulgate administrative regulations to provide for the inspection of the records of a licensee. KRS 198B.706(11) requires the board to establish continuing education requirements. KRS 198B.722 requires the board to establish requirements for renewal of licenses and authorizes the board to establish an inactive license. This administrative regulation establishes the licensure and record requirements for home inspectors.

Section 1.[~~Definitions. (1) "Applicant" is defined by KRS 198B.700(1).~~
~~(2) "Board" is defined by KRS 198B.700(2).~~
~~(3) "Contact hour" means fifty (50) minutes of instruction, exclusive of breaks, recesses, or other time not spent in instruction.~~
~~(4) "Licensee" is defined by KRS 198B.700(7).~~
~~Section 2.~~] Application Requirements. (1) An applicant for a home inspector license shall submit***[~~the following~~]***:
(a) A completed Application for Licensure as a Kentucky Home Inspector, Form KBHI 1;
(b) A two (2) inch by two (2) inch passport photograph affixed to the application form;
(c) A certificate of course completion and the applicant's national examination test score;
(d) A certificate of insurance;
(e) If applicable, other state or local licensure, certification, registration, or permit;
(f) A**[~~state-wide criminal background check from the applicant's state of residence administered by a law enforcement agency capable of conducting a background check, a~~]** recent background check performed by the Kentucky State Police**[,]** and a nationwide criminal background investigation check performed by the Federal Bureau of Investigation[~~report with the results of the state-wide background check~~]; and
(g) A nonrefundable fee of $250.
(2) An applicant for a home inspector license shall:
(a) Complete and pass a board-approved, prelicensing training course administered by a provider who has been approved by the board in accordance with 815 KAR 6:040 and subsection (8) of this section; and
(b) Pass an examination conducted by a board-approved test provider.
(3) A request to sit for the examination shall be made directly to the test provider.
(4) The examination fee shall be set by the testing company and shall be paid directly to the test provider.
(5) A passing score on the examination shall be valid for a period of three (3) years.
(6) Failing the examination.
(a) An applicant who fails to pass the examination two (2) times shall wait at least fourteen (14) calendar days from the date of the second failed examination prior to retaking the examination.
(b) An applicant who fails to pass the examination three (3) or more times shall wait at least thirty (30) calendar days from the date of the third or subsequent failed examination[~~failed examination~~] prior to retaking the examination.
(c) An applicant who fails to pass the examination three (3) times shall not be eligible to retake the examination until the applicant has again completed and again passed the prelicensing training course required by subsection (2)(a) of this section before retaking the examination a fourth time, and also for each subsequent examination failure thereafter.
(7) Procedures and conduct.
(a) The applicant shall follow:
1. Procedures and appropriate conduct established by the board or testing service administering an examination if the procedures and conduct requirements are provided or made available to each applicant or orally announced before the start of the examination; and
2. Written instructions communicated prior to the examination date and instructions communicated at the testing site, either written or oral, on the date of the examination.
(b) Failure to comply with all procedures established by the board or the testing service with regard to conduct at the examination shall be grounds for denial of the application.
(8) Course requirements. To be approved by the board, a prelicensing training course shall require a minimum of:
(a) Sixty-four (64) credit hours of training in the ***[~~following~~]***subject areas ***listed in subparagraphs 1. through 9. of this paragraph*** for at least the number of hours specified:
1. Manufactured housing: three (3) hours;
2. Standards of practice, KRS Chapter 198B and 815 KAR

Chapter 6, contracts, report writing, and communications: eleven (11) hours;

3. Exterior, roofing, insulation, and ventilation: six (6) hours;

4. Structure and interior: nine (9) hours;

5. Electrical and plumbing: nine (9) hours;

6. Heating and air conditioning: six (6) hours;

7. Field training: sixteen (16) hours, including not more than eight (8) hours in a laboratory;

8. General residential construction: three (3) hours; and

9. Environmental hazards, mitigation, water quality, and indoor air quality: one (1) hour;

(b) The completion of three (3) unpaid home inspections under the supervision of a Kentucky licensed home inspector with satisfactory written reports submitted to the course provider in addition to the sixteen (16) hours of field training required by paragraph (a)7 of this subsection; and

(c) An exit examination with a passing score.

(9) Criminal background checks and other disciplinary proceedings.

(a) Each applicant shall submit[~~**a state-wide criminal background check from the applicant's state of residence administered by a law enforcement agency capable of conducting a background check,**~~] a recent background check performed by the Kentucky State Police[~~**,**~~] and a nationwide criminal background investigation check performed by the Federal Bureau of Investigation[~~undergo a state-wide criminal background check administered by a law enforcement agency capable of conducting a state-wide background check and submit the results of the check along with the applicant's application~~].

(b) If an applicant has resided in a state for less than five (5) years prior to application, the applicant shall also obtain and submit a state-wide criminal background check by a law enforcement agency capable of conducting a state-wide background check from the state where the applicant previously resided.[~~(c) The board shall deny or refuse to renew a license to an applicant or licensee based on the seriousness of the offense, the length of time since the offense, and the applicant's or licensee's showing of remorse, rehabilitation, and restitution by clear and convincing evidence, who:~~

~~1. Has pleaded guilty to or has been convicted of a:~~

~~a. Felony; or~~

~~b. Misdemeanor; or~~

~~2. Has had disciplinary action taken against a professional license, certificate, registration, or permit held by the applicant or licensee in any jurisdiction or state, including Kentucky.~~]

Section 2.[~~3.~~] Reciprocity. An applicant seeking a license through reciprocity in accordance with KRS 198B.714 shall:

(1) Submit a completed Application for Licensure as a Kentucky Home Inspector, Form KBHI 1, and attachments established in Section 1(1)(b)[~~2(1)(b)~~] through (f) of this administrative regulation; and

(2) Pay a nonrefundable fee of $250[~~; and~~

~~(3) Meet the conditions of KRS 198B.714(1)~~].

Section 3.[~~4.~~] Nonresident Licensees. A nonresident licensee shall:

(1) Submit a completed Application for Licensure as a Kentucky Home Inspector, Form KBHI 1, and attachments established in Section 1(1)(b)[~~2(1)(b)~~] through (f) of this administrative regulation;

(2) Pay the fee established in Section 1(1)(g)[~~2(1)(g)~~] of this administrative regulation; and

(3) Comply with the provisions established in KRS 198B.716 and this administrative regulation.

Section 4.[~~5.~~] Renewal of Licenses. (1) To be eligible for renewal of license, an applicant shall hold a valid and current license issued by the board and[~~In addition, to the requirements established in KRS 198B.722, to renew a license, the licensee~~] shall:

(a)[~~(1)~~] Satisfy the continuing education requirements of Section 5[~~6~~] of this administrative regulation;

(b)[~~(2) Pay a nonrefundable renewal fee of $200 per year for each license that expires on or after July 1, 2012, to and including June 30, 2014; or~~

~~(3)~~] Pay a nonrefundable renewal fee of $250 per year for each year of licensure[~~license that expires on or after July 1, 2014~~];

(c)[~~(4)~~] Submit a fully-completed Application for Renewal Licensure as a Kentucky Home Inspector, Form KBHI 2 and attachments, including:

1.[~~(a)~~] A certificate of completion for continuing education;

2.[~~(b)~~] A certification of insurance information;

3.[~~(c)~~] If applicable, other state or local licensure, certification, registration, or permit; and

4.[~~(d)~~] A state-wide criminal background check; and

(d)[~~(5)~~] Submit a copy of a completed inspection report that has been compiled within the previous twelve (12) months immediately preceding renewal.

(2)(a) The renewal application shall be postmarked by the last day of the month in which the licensee is to renew the license.

(b) If the renewal application is postmarked within sixty (60) days after the last day of the licensee's renewal month, the licensee shall pay a nonrefundable:

1. Renewal fee of $250 per year for each year of licensure; and

2. Late fee of $250.

(3) If a licensee has not submitted a renewal application within sixty (60) days of the last day of the licensee's renewal month, the license shall be cancelled and the licensee shall cease and desist from conducting home inspections.

(4)(a) If a licensee failed to submit a renewal application more than sixty (60) days from the last day of the licensee's renewal month and wants to be licensed, the licensee shall submit a License Reinstatement Application within 120 days of the last day of the licensee's renewal month. The licensee shall pay a nonrefundable:

1. Renewal fee of $250 per year for each year of licensure; and

2. Late fee of $500.

(b) If a licensee failed to submit a renewal application or a License Reinstatement Application within 120 days of the last day of the licensee's renewal month and wants to be licensed, the licensee shall submit a new application in accordance with existing requirements for initial applicants under KRS Chapter 198B and 815 KAR Chapter 6.

Section 5.[~~6.~~] Continuing Education. (1) The continuing education requirements of this section shall apply only to those licensees who will have been licensed at least twelve (12) months at license renewal.

(2) Each licensee who renews a license in an odd year shall have at least fourteen (14) hours of continuing education per license year. Each licensee who renews a license during an even year shall have at least twenty-eight (28) hours of continuing education during the license biennial period[~~shall be required to have at least fourteen (14) hours of continuing education per license year~~].

(3) Prior to renewal, the continuing education shall include a minimum of***[~~the following~~]***:

(a) Three (3) hours in manufactured housing;

(b) Three (3) hours in KRS Chapter 198B and 815 KAR Chapter 6;[~~and~~]

(c) Three (3) hours in report writing***. The report writing course shall be completed face-to-face. An online report writing course shall not satisfy this continuing education requirement***; and

(d) Five (5)[~~Eight (8)~~] hours in technical courses, including identification and[~~,~~] determination[~~, and report writing~~], as applicable within the standards of practice.

(4) Continuing education shall be obtained from those providers approved by the board as provided in 815 KAR 6:080[~~040~~].

(5) An approved prelicensing course shall[~~to~~] satisfy the initial fourteen (14) hour continuing education requirement.

(6) A maximum of three (3) hours per license year shall be awarded for teaching part of a home inspection credit course or home inspection continuing education course as applied to the

appropriate content area established in subsection (3)(a) through (d)[~~(c)~~] of this section.

(7) A maximum of three (3) hours per license year shall be awarded for appointment to the board for a board member who is licensed and who has attended not less than eighty [~~percent~~] (80) percent of the board meetings each license year as applied to the content area established in subsection (3)(b) of this section.

(8)***[~~The report writing course shall be completed face-to-face. An online report writing course shall not satisfy the continuing education requirement established in subsection (3)(c) of this section.~~***

[~~(9)~~] A licensee shall not take the same continuing education course during a licensure period.

(9)[~~(10)~~] A licensee may complete the required continuing education hours within the sixty (60) day grace period from the last day of the licensee's renewal month.

Section 6.[~~7.~~] Inactive License. (1) Placement of a license in inactive status.

(a)1. To place a license in inactive status, a licensee shall submit a notarized statement indicating the desire to have the license placed in inactive status.

2. This notarized statement shall be mailed to the board and shall be accompanied by***[~~the following~~]***:

a. A check for ten (10) dollars made payable to the Kentucky State Treasurer;

b. The actual license card of the licensee; and

c. A current mailing address for the licensee.

(b) A licensee[~~Licensees~~] in inactive status shall not engage in home inspection activities within the Commonwealth of Kentucky.

(2) Renewal of license in inactive status.

(a) A licensee with an inactive license shall pay an annual inactive status fee equal to fifty (50) percent of the current renewal fee for an active license.

(b) Failure to pay this annual fee shall result in the expiration of the license on the last day of the licensee's birth month.

(3) Insurance coverage for licensees with inactive license. A licensee with an inactive status license shall not be required to maintain the insurance coverage required by KRS 198B.712(3)(d) during inactive status.

Section 7.[~~8.~~] Reactivation of Inactive License to Active Status. (1) A licensee who wishes to reactivate a license shall contact the board and submit a notarized statement requesting approval to return to active status.

(2) This request shall be accompanied by***[~~the following~~]***:

(a) The name of the licensee requesting activation;

(b) The license number of the licensee requesting reactivation;

(c) The birth date of the licensee requesting reactivation;

(d) A current mailing address for the licensee requesting reactivation;

(e) A check in the amount of ten (10) dollars made payable to the Kentucky State Treasurer;

(f) Proof of liability insurance naming the individual in the amount of $250,000 as required by KRS 198B.712(3)(d);

(g) A state-wide criminal background check administered by a law enforcement agency capable of conducting a state-wide background check; and

(h) Proof of continuing education as required by Section 8[~~9~~] of this administrative regulation.[~~; and~~]

(3) A license that has been inactive for a period of five (5) years from the date of board action shall be considered expired.

Section 8.[~~9.~~] Continuing Education Requirements for Licensees in Inactive Status Returning to Active Status. (1) Except as provided by subsection (2) of this section, a licensee with an inactive status who wishes to reactivate the license shall complete the[~~following~~] continuing education requirements established in this subsection prior to application to return to active status. The licensee shall complete[~~:~~

~~(1)~~] fourteen (14) hours per year that the license has been inactive, which[~~. This fourteen (14) hours~~] shall include:

(a) Three (3) hours in manufactured housing;

(b) Three (3) hours of KRS Chapter 198B and 815 KAR Chapter 6; and

(c) Eight (8) hours, in any combination, of:

1. Electrical;

2. Plumbing;

3. Heating, ventilation, and air conditioning;

4. Roofing; or

5. Report writing.

(2) A board approved sixty-four (64) hour prelicensing training course may be used to satisfy the requirement established in subsection (1) of this section[~~this requirement~~].

Section 9.[~~10.~~] Maintenance of Records. (1) Address.

(a) A license holder shall report a change of address to the board in writing within ten (10) days after the change.

(b) The board shall not be responsible for the license holder's failure to receive notices, communications, and correspondence caused by the license holder's failure to promptly notify the board of a change of address.

(2) Names.

(a) A license holder shall notify the board in writing of a name change within thirty (30) days of the change.

(b) The notification shall be accompanied by a copy of a marriage certificate, divorce decree, court order, or other documentation that verifies the name change.

(c) The board shall not be responsible for the license holder's failure to receive notices, communications, and correspondence caused by the license holder's failure to promptly notify the board of a name change.

(3) Inspection records.

(a) A licensed home inspector shall retain ***[~~the following records~~]***for at least three (3) years from the date of the inspection:

1. The written reports;

2. The contract; and

3. Supporting documentation, if applicable.

(b) Records may be retained in retrievable, electronic format.

(c) The licensee shall provide all records requested by the board within ten (10) days of receipt of the request.

Section 10. (1) The board may deny, refuse to renew, or reactivate a license to an applicant or licensee who:

(a) Has entered a guilty plea to, pleaded guilty to, or been convicted of a:

1. Felony; or

2. Misdemeanor; or

(b) Has had disciplinary action taken against a professional license, certificate, registration, or permit held by the applicant or licensee in any jurisdiction or state, including Kentucky.

(2) The board shall base its decision on the seriousness of the offense or disciplinary action, the length of time since the offense or disciplinary action, and the applicant's or licensee's showing of remorse, rehabilitation, and restitution by clear and convincing evidence.

Section 11. The board shall deny, refuse to renew, or reactivate a license to an applicant or licensee who fails to comply with a provision of KRS Chapter 198B or this administrative regulation.

Section 12.[~~11.~~] Incorporation by Reference. (1) The following material is incorporated by reference:

(a) "Application for Licensure as a Kentucky Home Inspector", Form KBHI 1, 7/2014[~~1-2012~~];[~~and~~]

(b) "Application for Renewal Licensure as a Kentucky Home Inspector", Form KBHI 2, 7/2014; and

(c) "License Reinstatement Application", Form KBHI 6, 7/2014[~~1-2012~~].

(2) This material may be inspected, copied, or obtained, subject to applicable copyright law, at the Office of Occupations and Professions, 911 Leawood Drive, Frankfort, Kentucky 40601, Monday through Friday, 8 a.m. to 5 p.m.

MITCH BUCHANAN, Board Chair

APPROVED BY AGENCY: November 13, 2014

FILED WITH LRC: November 13, 2014 at 4 p.m.

CONTACT PERSON: Diana Jarboe, Board Administrator, Kentucky Board of Home Inspectors, Division of Occupations and Professions, 911 Leawood Drive, P. O. Box 1360, Frankfort, Kentucky 40601, phone (502) 564-3296, ext. 227, fax (502) 696-4961.

PUBLIC PROTECTION CABINET
Office of Occupations and Professions
Board of Home Inspectors
(As Amended at ARRS, December 9, 2014)

815 KAR 6:030. Home inspector standards of conduct.

RELATES TO: KRS 198B.706, 198B.728

STATUTORY AUTHORITY: KRS 198B.706***(13), (15)***

NECESSITY, FUNCTION AND CONFORMITY: KRS 198B.706(15) requires the Kentucky Board of Home Inspectors to promulgate administrative regulations necessary to enforce the provisions of KRS 198B.700 to 198B.738. KRS 198B.706(13) authorizes the board to establish standards of practice for home inspectors. This administrative regulation establishes standards of conduct for home inspectors.

Section 1. Standards of Conduct. A licensed home inspector or an entity under which the inspector conducts business[,] shall:

(1) Act as an unbiased third party to the real estate transaction;

(2) Discharge the duties of a home inspector with integrity and fidelity to the client;

(3) Express an opinion on any aspect of the inspected property only if that opinion is based upon the experience, training, education, and personal opinion of the inspector;

(4) Provide a written disclosure to the client of any interest the inspector maintains in the transaction and advise the client to obtain competitive bids before products or additional services are offered by the licensee including:

(a) Products or additional services to be purchased from or provided by the inspector, his or her agents, or employees;

(b) Products or additional services to be purchased from or provided by any entity, organization, or venture in which the inspector has an interest; or

(c) Products or additional services to be purchased ***that[which]*** will result in any additional compensation or benefit to the inspector, financial or otherwise; and

(5) Provide the license number, following the licensee's signature, on any document signed by the home inspector pertaining to the home inspection.

Section 2. Additional Standards. In addition to the affirmative duties imposed by Section 1 of this administrative regulation, a licensed home inspector or an entity under which the licensee conducts business[,] shall not:

(1) Engage in or knowingly cooperate in the commission of fraud or material deception to obtain a license to engage in the practice of home inspection, including cheating on the licensing examination;

(2) Perform repairs or modifications for compensation, or for other direct or indirect financial benefit, to a residential dwelling within twelve (12) months after performing a home inspection on the same residential dwelling, if the repairs or modifications are based upon the findings in the home inspection report. This subsection shall not apply if the home inspector purchases the residence after performing the inspection;

(3) Provide a home inspection to the client that does not conform to the Standards of Practice selected on the initial application for licensure or the application for renewal submitted pursuant to 815 KAR 6:010;

(4) Provide services that constitute the unauthorized practice of any profession that requires a special license if the home inspector does not hold that license;

(5) Provide any compensation, inducement, or reward, either directly or indirectly, to any person or entity other than the client for the referral of business to the inspector. The purchase or use of advertising, marketing services, or products shall not be considered compensation, inducement, or reward;

(6) Conduct a home inspection or prepare a home inspection report for which the inspector's fee is contingent upon the conclusions contained in the report;

(7) Misrepresent the financial interests, either personally or through his or her employment, of any of the parties to the transfer or sale of a residential dwelling upon which the licensee has performed a home inspection;

(8) Disclose any information concerning the results or content of the home inspection report without the [~~written~~] approval of the client for whom the home inspection was performed. ***[However,]***The home inspector may disclose information if**:**

(a) There is an imminent danger to life, health, or safety***; or***

(b)[, or where] The home inspector is compelled to disclose information by court order;

(9) Accept compensation, financial or otherwise, from more than one (1) interested party for the same home inspection on the same property without the written consent of all interested parties;

(10) Make a false or misleading representation regarding ***the***:

(a) ***[The]***Condition of a residential dwelling for which the licensee has performed or contracted to perform a home inspection;

(b) ***[The]***Extent of the services the licensee has performed or will perform; or

(c) ***[The]***Type of license held by the licensee;

(11) Be convicted of a crime in the course of the practice of home inspection or commit any act constituting a violation of state law during the course of a home inspection;

(12) Make a false or misleading representation ***in***:

(a) ***[In]***A license or renewal application form; or

(b) ***[In]***Information provided to the board;

(13) Fail to pay any fees required by 815 KAR 6:010;

(14) Fail to continuously maintain the insurance or other evidence of financial responsibility required by KRS Chapter 198B or 815 KAR Chapter 6;

(15) Engage in any course of lewd or immoral conduct in connection with the delivery of services to clients;

(16) Fail to complete the continuing education requirements established by the board in 815 KAR 6:010;

(17) Use the term "certified" in advertising, unless the certification is current and the full name of the certifying body is clearly identified;

(18) Use the term "fully insured," unless the person or entity has business liability and worker's compensation insurance coverage in effect at the time of the advertisement; [~~or~~]

(19) Continue to practice, if the licensed home inspector has become unfit to practice due to:

(a) Professional incompetence;

(b) Failure to keep abreast of current professional theory or practice;

(c) Physical or mental disability;

(d) Addiction to, abuse of, or severe dependency on[,] alcohol or other drugs that endanger the public by impairing a licensed home inspector's ability to practice safely; or

(e) Failure to maintain a valid home inspector's license;

(20) Omit information in a home inspection report required to be disclosed to a client by the Standards of Practice selected on the initial application for licensure or the application for renewal submitted pursuant to 815 KAR 6:010; or

(21) Fail to comply with an order of the board.

Section 3. A home inspection report shall include a statement that the report does not address environmental hazards and shall list all other exclusions with specificity. The presence or evidence of the following environmental hazards shall not be addressed in the report:

(1) Air-borne hazards;

(2) The air quality or the sickness of any building, including, but not limited to, the presence of absence of all

manner of biological activity, such as hazardous plants, insects, birds, pets, mammals, and other flora and fauna, and their consequent physical damage, toxicity, noxiousness, odors, waste products, and wood destroying animals and fungi;

(3) Animals, insects, or rodents;

(4) Asbestos;

(5) Carcinogens, including but not limited to radon;

(6) Contaminants in soil, water, and air;

(7) Electro-magnetic fields;

(8) Hazardous materials including, but not limited to, the presence of lead in paint;

(9) Hazardous waste conditions;

(10) Mold, mildew, or fungus;

(11) Hazardous plants or animals including, but not limited to wood destroying organisms, wood destroying insects, or diseases harmful to humans including molds or mold-like substances;

(12) Noise;

(13) Potability of any water;

(14) Toxins;

(15) Urea formaldehyde;

(16) The effectiveness of any system installed or method utilized to control or remove suspected environmental hazards; and

(17) Compliance with regulatory requirements (codes, regulations, laws, ordinances, etc.), any manufacturer's recalls, conformance with manufacturer installation or instructions, or any information for consumer protection purposes.[~~Section 3. Disciplinary Actions and Appeals. (1) Pursuant to KRS 198B.728, the board may investigate complaints related to violations of this administrative regulation and may impose the following penalties:~~

~~(a) Denial of a license;~~

~~(b) Suspension of a license; or~~

~~(c) Revocation of a license.~~

~~(2) The licensee shall be notified of the proposed penalties in writing sent to the licensee's address on file with the board.~~

~~(3) If a licensee chooses to appeal a proposed penalty, the licensee shall notify the board of his appeal in writing within ten (10) days of the notice of the proposed penalty.~~

~~(4) All appeal proceedings shall be conducted in accordance with KRS Chapter 13B.~~]

MITCH BUCHANAN, Board Chair

APPROVED BY AGENCY: November 13, 2014

FILED WITH LRC: November 13, 2014 at 4 p.m.

CONTACT PERSON: Diana Jarboe, Board Administrator, Kentucky Board of Home Inspectors, Division of Occupations and Professions, 911 Leawood Drive, P. O. Box 1360, Frankfort, Kentucky 40601, phone (502) 564-3296, ext. 227, fax (502) 696-4961.

PUBLIC PROTECTION CABINET
Office of Occupations and Professions
Board of Home Inspectors
(As Amended at ARRS, December 9, 2014)

815 KAR 6:090. Procedures for complaints and administrative hearings.

RELATES TO: KRS 198B.706(3), (4), 198B.712, 198B.722, 198B.728, 198B.730

STATUTORY AUTHORITY: KRS 198B.706(1), (3), (15)

NECESSITY, FUNCTION AND CONFORMITY: KRS 198B.706(4) requires the board to investigate complaints concerning licensees, or persons the board has reason to believe should be licensees, including complaints concerning failure to comply with KRS 198B.700 to 198B.738 or administrative regulations promulgated under KRS 198B.700 to 198B.738, and, if appropriate, take action in accordance with KRS 198B.728 and 198B.730. KRS 198B.730(1) requires the board to schedule and conduct an administrative hearing in accordance with the provisions of KRS Chapter 13B. KRS 411.272(2) ***requires***[~~provides that~~] KRS 411.270 to 411.282 ***to*** prevail over any conflicting law otherwise applicable to any action, claim, or cause of action against a home inspector, with specified exceptions. KRS 198B.728 ***requires***[~~provides that~~] the board ***to***[~~shall~~] take disciplinary actions against or impose sanctions on a licensee for failing to comply with any provision of KRS 198B.700 to 198B.738 or administrative regulations promulgated under KRS 198B.700 to 198B.738. KRS 198B.706(1) requires the board to find the requirements for and prescribe the form of documents that are required by KRS 198B.700 to 198B.738. KRS 198B.706(15) requires the board to promulgate administrative regulations to carry out the requirements of KRS 198B.700 to 198B.738. This administrative regulation establishes supplemental administrative hearing procedures for matters before the commission and the required forms for a complaint or answer.

Section 1. Complaint Screening Committee. (1) The committee shall consist of three (3) board members, appointed by the chair of the board to:

(a) Review complaints and investigative reports;

(b) Participate in informal proceedings to resolve formal complaints; and

(c) Make recommendations for disposition of complaints to the full board.

(2) The committee may be assisted by the board staff and counsel to the board.

Section 2. Complaint Process and Disciplinary Action Against a Licensee. (1) The board may investigate complaints related to violations of this administrative regulation and may***[impose the following penalties]***:

(a) Deny issuance of a license;

(b) Refuse to renew a license;

(c) Refuse to reinstate a license;

(d) ***Establish*** probation of a license;

(e) ***Suspend***[~~Suspension of~~] a license;

(f) ***Revoke***[~~Revocation of~~] a license;[~~or~~]

(g) ***Issue***[~~Issuance of~~] a public or private written reprimand***;***

or

(h) Subject the license to a combination of one (1) or more penalties established in paragraphs (a) through (g) of this subsection.

(2) A complaint may be initiated by the board, an individual, an entity, or any governmental agency. It shall be completed on a Complaint Form, KBHI-***7***[~~COMP 1~~], and shall:

(a) State the basis of the complaint fully and concisely, including the name of the person who the complaint is against;

(b) Include any documentation in support of the complaint; and

(c) If the complaint is initiated by the public, be notarized by a notary public.

(3) A copy of the initiating complaint shall be mailed to the licensee to his or her last known address on file with the board. The licensee shall file a written response to the initiating complaint with the board within twenty-one (21) days of the date on which the initiating complaint was mailed. The written response shall:

(a) Identify the respondent;

(b) State his or her response to the complaint;

(c) Include any documentation in dispute of the complaint;

(d) If applicable, state ***if***[~~whether~~] he or she proposes to inspect the residence that is the subject of the claim and to complete the inspection within twenty-one (21) ***calendar*** days of the date on which the initiating complaint was mailed. Any proposal shall include the statement that the home inspector shall, based on the inspection, offer to remedy the defect, compromise by payment, or dispute the claim; offer to compromise and settle the claim by monetary payment without inspection; or state that the home inspector disputes the claim; and

(e) Be notarized by a notary public.

(4) Once the written response is received, the complaint ***screening***[~~review~~] committee shall review the case. The committee shall report ***the committee's***[~~its~~] findings and

recommendations to the board. The board shall:

(a) Dismiss the complaint and notify the person making the complaint and the licensee that no further action shall be taken at the present time;

(b) Find an investigation is warranted; or

(c) Find a violation of a provision of KRS 198B.700 to 198B.738 or ***815 KAR Chapter 6[~~the administrative regulations promulgated under KRS 198B.700 to 198B.738~~]*** and issue notice of disciplinary action to the licensee.

(5)(a) The board may appoint any of its members or any agent or representative of the board to conduct an investigation of the complaint.

(b) Upon the completion of the investigation, the person or persons making that investigation shall submit a written report to the board containing a succinct statement of the facts disclosed by the investigation.

(c) Based on consideration of the complaint and the investigative report, if any, the board shall find if there has been a prima facie violation of a provision of KRS 198B.700 to 198B.738 or 815 KAR Chapter 6.

(d) If the investigator is a member of the board, he or she shall not vote.

(e) If it is found that the facts alleged in the initiating complaint or investigative report do not constitute a prima facie violation of the statutes or administrative regulations, the board shall notify the person making the complaint and the licensee that no further action shall be taken at the present time.

(6) If it is found that there is a prima facie violation of a provision of KRS 198B.700 to 198B.738 or 815 KAR Chapter 6, the board shall issue written notice of disciplinary action sent to the licensee's address on file with the board and inform the licensee:

(a) Of the specific reason for the board's action, including:

1. The statutory or regulatory violation; and

2. The factual basis on which the disciplinary action is based;

(b) Of the penalty imposed; and

(c) That the licensee may appeal the penalty to the board within twenty (20) calendar days of the date of the board's notice.

(7) A written request for an administrative hearing shall be filed with the board within twenty (20) calendar days of the date of the board's notice. The request shall identify the specific issues in dispute and the legal basis on which the board's decision on each issue is believed to be erroneous.

(8) If the request for an appeal is not timely filed, the notice of disciplinary action shall be effective upon the expiration of the time for the licensee to request an appeal.

(9) A complaint initiated by the public shall be filed within one (1) year of the date the complainant knew or should have known of a violation of a provision of KRS 198B.700 to 198B.738 or a provision of 815 KAR Chapter 6 by the licensee.

Section 3. Settlement by Informal Proceedings. (1) The board, through counsel and the complaint screening committee, may, at any time during the complaint process ***established[~~described~~]*** in Section 2 of this administrative regulation, enter into informal proceedings with the licensee who is the subject of the complaint for the purpose of appropriately dispensing with the matter.

(2) An agreed order or settlement reached through this process shall be approved by the board and signed by the individual who is the subject of the complaint and the chair.

(3) The board may employ mediation as a method of resolving the matter informally.

Section 4. Disciplinary Action Against a Prelicensing Provider **or Continuing Educational Provider**. (1) The board may deny, suspend, probate, or revoke the registration of any prelicensing course provider for***[~~any of the following acts or omissions~~]***:

(a) Obtaining or attempting to obtain registration or approval through fraud, deceit, false statements, or misrepresentation;

(b) Failing to provide complete and accurate information in the initial registration or in any notification of change in information;

(c) Failing to timely notify the board of a change in the information required for registration of the provider;

(d) Falsifying of any records regarding the courses conducted by the provider or the persons who attended the courses offered;

(e) Failing to maintain any required records regarding course offerings conducted by the provider or the persons who attended the course;

(f) Failing to adequately train the staff responsible for taking attendance at any approved course;

(g) Failing to provide the board with copies of any document or other information required to be maintained by the provider pursuant to this administrative regulation;

(h) Advertising that a provider has been approved by the board prior to the date the approval is granted;

(i) Failing to include provider and course numbers in advertisements;

(j) Failing to maintain a record of instructors;

(k) Failing to resolve attendance reporting problems; or

(l) Failing to comply with any other duty ***established for[~~imposed on~~]*** providers in **815 KAR 6:040 or 815 KAR 6:080[~~this administrative regulation~~]**.

(2) The board shall issue written notice of disciplinary action sent to the prelicensing course **or continuing educational** provider's address on file with the board and inform the provider:

(a) Of the specific reason for the board's action, including:

1. The statutory or regulatory violation; and

2. The factual basis on which the disciplinary action is based;

(b) Of the disciplinary action being taken by the board; and

(c) That the provider may appeal the disciplinary action to the board within ten (10) calendar days of the date of the board's notice.

(3) A written request for an administrative hearing shall be postmarked to the board within ten (10) calendar days of the date of the board's notice.

(4) If the request for an appeal is not timely filed, the notice of disciplinary action shall be effective upon the expiration of the time for the licensee to request an appeal.

(5) A provider whose registration has been revoked shall not reapply for registration for two (2) years from the date of revocation.

Section 5.**[~~Disciplinary Matters Against Pre-Licensing Course or Continuing Educational Providers. (1) The board may deny, suspend, probate, or revoke the approval of any pre-licensing course or continuing education provider for any of the following acts or omissions:~~**

~~(a) Obtaining or attempting to obtain registration or approval through fraud, deceit, false statements, or misrepresentation;~~

~~(b) Failing to provide complete and accurate information in the initial registration or in any notification of change in information;~~

~~(c) Failing to timely notify the board of a change in the information required for registration of the provider;~~

~~(d) Falsifying of any records regarding the courses conducted by the provider or the persons who attended the courses offered;~~

~~(e) Failing to maintain any required records regarding course offerings conducted by the provider or the persons who attended the course;~~

~~(f) Failing to adequately train the staff responsible for taking attendance at any approved course;~~

~~(g) Failing to provide the board with copies of any document or other information required to be maintained by the provider pursuant to this administrative regulation;~~

~~(h) Advertising that a provider has been approved by the board prior to the date the approval is granted;~~

~~(i) Failing to include provider and course numbers in advertisements;~~

~~(j) Failing to maintain a record of instructors;~~

~~(k) Failing to resolve attendance reporting problems; or~~

~~(l) Failing to comply with any other duty imposed on providers in this administrative regulation.~~

~~(2) The board shall issue written notice of disciplinary action sent to the prelicensing course provider's address on file with the board and inform the provider:~~

~~**(a) Of the specific reason for the board's action, including:**~~

~~**1. The statutory or regulatory violation; and**~~

~~**2. The factual basis on which the disciplinary action is based;**~~

~~**(b) Of the disciplinary action being taken by the board; and**~~

~~**(c) That the provider may appeal the disciplinary action to the board within ten (10) calendar days of the date of the board's notice.**~~

~~**(3) A written request for an administrative hearing shall be postmarked to the board within ten (10) calendar days of the date of the board's notice. A written request for an administrative hearing shall be filed with the board within twenty (20) calendar days of the date of the board's notice. The request shall identify the specific issues in dispute and the legal basis on which the board's decision on each issue is believed to be erroneous.**~~

~~**(4) If the request for an appeal is not timely filed, the notice of disciplinary action shall be effective upon the expiration of the time for the licensee to request an appeal.**~~

~~**Section 6.**~~**]** Right of Appeal from a Denial of or Refusal to Renew or Reinstate a License. (1) The board shall issue written notice of the denial informing the applicant:

(a) Of the specific reason for the board's action, including:

1. The statutory or regulatory violation; and

2. The factual basis on which the denial is based; and

(b) That the applicant may appeal the pending denial to the board within twenty (20) ***calendar*** days after receipt of this notification, excluding the day he or she receives notice.

(2) A written request for an administrative hearing shall be filed with the board within twenty (20) calendar days of the date of the board's notice.**[**~~**A written request for an administrative hearing shall be filed with the board within twenty (20) calendar days of the date of the board's notice.**~~**]** The request shall identify the specific issues in dispute and the legal basis on which the board's decision on each issue is believed to be erroneous.

(3) If the request for an appeal is not timely filed, the notice of denial shall be effective upon the expiration of the time for the certificate holder to request an appeal.

Section **6.**[~~**7.**~~**]** Revocation of Probation. (1) If the board moves to revoke probation, the board shall issue written notice of the revocation and inform the probationee:

(a) Of the factual basis on which the revocation is based;

(b) Of each probation term violated; and

(c) That the probationee may appeal the revocation to the board within twenty (20) calendar days of the date of notification of revocation. The notification shall be sent to the last known address on file with the board for the certificate holder.

(2) A written request for an administrative hearing shall be filed with the board within twenty (20) calendar days of the date of the board's notice.**[**~~**A written request for an administrative hearing shall be filed with the board within twenty (20) calendar days of the date of the board's notice.**~~**]** The request shall identify the specific issues in dispute and the legal basis on which the board's decision on each issue is believed to be erroneous.

(3) If the request for an appeal is not timely filed, the notice of revocation shall be effective upon the expiration of the time for the certificate holder to request an appeal.

Section **7.**[~~**8.**~~**]** Any request for an administrative hearing shall be sent to the Board of Home Inspectors by mail to P.O. Box 1360, Frankfort, Kentucky 40602 or by delivery to 911 Leawood Drive, Frankfort, Kentucky 40601.

Section **8.**[~~**9.**~~**]** Each appeal shall be governed in accordance with KRS Chapter 13B.

Section **9.**[~~**10.**~~**]** Each appeal shall be limited to the specific issues in dispute identified in the request for an administrative hearing.

Section **10.**[~~**11.**~~**]** Incorporation by Reference. (1) "Complaint Form", Form KBHI 7, 7/2014, is incorporated by reference.

(2) This material may be inspected, copied, or obtained, subject to applicable copyright law, at the Kentucky Board of Home Inspectors, 911 Leawood Drive, Frankfort, Kentucky, telephone (502) 564-3296, Monday through Friday, 8:30 a.m. to 5 p.m.

MITCH BUCHANAN, Board Chair

APPROVED BY AGENCY: November 13, 2014

FILED WITH LRC: November 13, 2014 at 4 p.m.

CONTACT PERSON: Diana Jarboe, Board Administrator, Kentucky Board of Home Inspectors, Division of Occupations and Professions, 911 Leawood Drive, P. O. Box 1360, Frankfort, Kentucky 40601, phone (502) 564-3296, ext. 227, fax (502) 696-4961.

CABINET FOR HEALTH AND FAMILY SERVICES
Office of Health Policy
(As Amended at ARRS, December 9, 2014)

900 KAR 6:065. Certificate of need application process.

RELATES TO: KRS 216B.015, 216B.040, 216B.062(1), 216B.085, 216B.095[~~216B.010-216B.130, 216B.330-216B.339, 216B.455, 216B.990~~]

STATUTORY AUTHORITY: KRS [~~194A.030, 194A.050,~~] 216B.040(2)(a)1[~~, 216B.330~~]

NECESSITY, FUNCTION, AND CONFORMITY: KRS 216B.040(2)(a)1 requires the Cabinet for Health and Family Services to administer Kentucky's Certificate of Need Program and to promulgate administrative regulations as necessary for the program. This administrative regulation establishes the requirements necessary for the orderly administration of the certificate of need application, review, decision, and reconsideration process.

Section 1. Definitions. (1) "Cabinet" is defined by KRS 216B.015(6)[~~(5)~~].

(2) "Certificate of Need Newsletter" means the monthly newsletter that is published by the cabinet regarding certificate of need matters and is available on the Certificate of Need Web site at http://chfs.ky.gov/ohp/con.

(3) "Days" means calendar days, unless otherwise specified.

(4) "Formal review" means the review of an application[~~applications~~] for certificate of need which is[~~are~~] reviewed within ninety (90) days from the commencement of the review as provided by KRS 216B.062(1) and which is[~~are~~] reviewed for compliance with the review criteria set forth at KRS 216B.040 and 900 KAR 6:070.

(5) "Nonsubstantive review" is defined by KRS 216B.015(18)[~~(17)~~].

(6) "Owner" means a person as defined in KRS 216B.015(22)[~~(21)~~] who is applying for the certificate of need and will become the licensee of the proposed health service or facility.

(7) "Proposed service area" means the geographic area the applicant proposes to serve.

(8)[~~"Public information channels" means the Office of Communication and Administrative Review in the Cabinet for Health and Family Services.~~

~~(9) "Public notice" means notice given through:~~

~~(a) Public information channels; or~~

~~(b) The cabinet's Certificate of Need Newsletter.~~

~~(10)~~] "Secretary" is defined by KRS 216B.015(26)[~~(25)~~].

(9)[~~(11)~~] "Show cause hearing" means a hearing during which it is determined whether a person or entity has violated provisions of KRS Chapter 216B.

Section 2. Letter of Intent. (1) Except for an applicant requesting nonsubstantive review under the provisions of KRS 216B.095(3)(a) through (f), OHP - Form 1, Letter of Intent, incorporated by reference in 900 KAR 6:055, shall be filed with the cabinet by an[~~each~~] applicant for a certificate of need.[~~This shall:~~

~~(a) Include those applicants requesting nonsubstantive review~~

~~under the provisions of 900 KAR 6:075; and~~

~~(b)Not include those applicants requesting nonsubstantive review under the provisions of KRS 216B.095(3)(a) through (e).~~]

(2) Upon receipt of a letter of intent, the cabinet shall within three (3) days[~~one (1) day~~] provide the sender with written acknowledgment of receipt of the letter and shall publish notice of the receipt in the next published Certificate of Need Newsletter.

(3) An application for a certificate of need shall not be processed until the letter of intent has been on file with the cabinet for thirty (30) days.

Section 3. Certificate of Need Application. (1) An applicant for a certificate of need shall file an application with the cabinet on the appropriate certificate of need application form: OHP - Form 2A, OHP - Form 2B, or OHP - Form 2C, incorporated by reference in 900 KAR 6:055.

(2) To file an application for certificate of need, the applicant shall file an original and one (1) copy of the appropriate certificate of need application form together with the prescribed fee set forth in 900 KAR 6:020 on or before the deadlines established by 900 KAR 6:060.

(3) Formal or nonsubstantive review of an application for a certificate of need shall not begin until the application has been deemed complete by the cabinet.

(4) The cabinet shall deem an application complete if the applicant has:

(a) Provided the cabinet with all of the information necessary to complete the application; or

(b) Declined to submit the requested information and has requested that its application be reviewed as submitted.

(5) Once an application has been deemed complete, the applicant shall not submit additional information regarding the application unless the information is introduced at a public hearing.

(6) Once an application has been deemed complete, it shall not be amended to:

(a) Increase the scope of the project;

(b) Increase the amount of the capital expenditure;

(c) Expand the size of the proposed service area;

(d) Change the location of the health facility or health service; or

(e) Change the owner, unless the application involves a licensed health facility and a change of ownership with appropriate notice has occurred after the application was submitted.

(7) An application that has been deemed complete may be amended at a public hearing to:

(a) Decrease the scope of the project;

(b) Decrease the amount of the capital expenditure; or

(c) Decrease the proposed service area.

(8) An applicant which has had a certificate[~~Applicants who have had proposals for certificates~~] of need approved under the nonsubstantive review provisions of KRS 216B.095(3)(a) through (f)[~~900 KAR 6:075 or under the provisions of KRS 216B.095(3)(a) through (e)~~] may request that the cabinet change the specific location to be designated on the certificate of need if:

(a) The facility has not yet been licensed;

(b)The location is within the county listed on the certificate of need application; and

(c) The applicant files a written request with the cabinet within 180 days of the date of issuance of the certificate of need. A request shall include the reason why the change is necessary.

(9) If an application is not filed with the cabinet within one (1) year of the date of the filing of a letter of intent, the letter of intent shall expire, and the applicant shall file a new letter of intent at least thirty (30) days prior to submitting an application.

(10) If an application is withdrawn, the applicant shall file a new letter of intent at least thirty (30) days prior to resubmitting an application.

(11) An application that is not deemed complete within one (1) year from the date that it is filed shall expire and shall not be placed on public notice or reviewed for approval.

Section 4. Certificate of Need Review. (1) Prior to being reviewed for the approval or denial of a certificate of need, an application[~~all applications~~] for certificate of need shall be reviewed for completeness pursuant to Section 5 of this administrative regulation.

(2) Unless granted nonsubstantive review status under the criteria in 900 KAR 6:075, an application for a certificate of need shall be reviewed for approval or denial according to the formal review criteria set forth in 900 KAR 6:070.

(3) If granted nonsubstantive review status under the criteria in 900 KAR 6:075, an application for a certificate of need shall be reviewed for approval or denial of the certificate of need according to the nonsubstantive review criteria set forth in 900 KAR 6:075.

Section 5. Completeness Review. (1)[~~(a)~~] Fifteen (15) days after the deadline for filing an application in the next appropriate batching cycle, the cabinet shall conduct an initial review to determine if the application is complete for formal review or nonsubstantive review requested pursuant to KRS 216B.095(3)(a) through (f)[~~900 KAR 6:075~~].[~~(b) Applications for which nonsubstantive review status has been requested pursuant to KRS 216B.095(3)(a) through (e) shall be reviewed within fifteen (15) days of receipt.~~]

(2) If the cabinet finds that the application for formal review is complete, the cabinet shall:

(a) Notify the applicant in writing within one (1) day that the application has been deemed complete and that review of the application for the approval or denial of a certificate of need shall begin upon public notice being given; and

(b) Give public notice in the next appropriate Certificate of Need Newsletter, pursuant to the timetable set forth in 900 KAR 6:060, that review of the application for approval or denial of a certificate of need has begun.

(3) If the cabinet finds that the application for nonsubstantive review is complete, the cabinet shall notify the applicant in writing within ten (10) days that the application has been deemed complete and that review of the application for the approval or denial of a certificate of need shall begin upon public notice being given.

(4) A decision to grant or deny nonsubstantive review status shall be made within ten (10) days of the date the applicant is notified that the application has been deemed complete.

(5)[~~(a)~~] The cabinet shall give public notice for applications granted nonsubstantive review status under the provisions of KRS 216B.095(3)(a) through (f)[~~900 KAR 6:075~~] in the next appropriate Certificate of Need Newsletter, pursuant to the timetable set forth in 900 KAR 6:060, that status has been granted and that review of the application for approval or denial of a certificate of need has begun.

[~~(b) Public notice for applications granted nonsubstantive review status according to KRS 216B.095(3)(a) through (e) shall be mailed to affected persons.~~]

(6)**[~~A determination that an application is complete shall:~~**

~~(a) Indicate that the applicant has responded to the necessary items on the application;~~

~~(b) Not be determinative of the accuracy of, or weight to be given to, the information contained in the application; and~~

~~(c) Not imply that the application has met the review criteria for approval of a certificate of need.~~

~~(7)~~] If the cabinet finds that the application is incomplete, the cabinet shall:

(a) Provide the applicant with written notice of the information necessary to complete the application; and

(b) Notify the applicant that the cabinet shall not deem the application complete unless within fifteen (15) days of the date of the cabinet's request for additional information:

1. The applicant submits the information necessary to complete the application by the date specified in the request; or

2. The applicant requests in writing that the cabinet review its application as submitted.

(7)[~~(8)~~] If, upon the receipt of the additional information requested, the cabinet finds that the application for formal review is complete, the cabinet shall:

(a) Notify the applicant in writing that:

1. The application for formal review has been deemed

complete; and

2. Review of the application for the approval or denial of a certificate of need shall begin upon public notice being given; and

(b) Give public notice in the next appropriate Certificate of Need Newsletter, pursuant to the timetable set forth in 900 KAR 6:060, that review of the application for approval or denial of a certificate of need has begun.

(8)[~~(9)~~] If, upon the receipt of the additional information requested, the cabinet finds that an application for nonsubstantive review is complete, the cabinet shall:

(a) Notify the applicant in writing that:

1. The application has been deemed complete;

2. Review of the application for the approval or denial of a certificate of need shall begin upon public notice being given; and

3. A decision to grant or deny nonsubstantive review status shall be made within ten (10) days of the date that the application was deemed complete; and

(b) Give public notice in the next appropriate Certificate of Need Newsletter, pursuant to the timetable set forth in 900 KAR 6:060, for applications granted nonsubstantive review status under the provisions of KRS 216B.095 (3)(a) through (f)[~~900 KAR 6:075~~] that status has been granted and that review of the application for approval or denial of a certificate of need has begun.[~~Public notice for applications granted nonsubstantive review status according to KRS 216B.095(3)(a) through (e) shall be mailed to affected persons.~~]

(9)[~~(10) If the application is incomplete, or~~] If the information submitted **in response to the cabinet's request for additional information** is insufficient to complete the application, the cabinet shall:

(a) Request the information necessary to complete the application; and

(b) Inform the applicant that the application shall not be deemed complete and shall not be placed on public notice until:

1. The applicant submits the information necessary to complete the application; or

2. The applicant requests in writing that its application be reviewed as submitted.

(10)[~~(11)~~] Once an application has been deemed complete, an applicant shall not submit additional information to be made part of the public record unless:

(a) The information is introduced at a public hearing; [~~or~~]

(b) For a deferred application for formal review, the additional information is submitted at least twenty (20) days prior to the date that the deferred application is placed on public notice; or

(c) For a deferred application for nonsubstantive review, the additional information is submitted at least ten (10) days prior to the date that the deferred application is placed on public notice.

(11)[~~(12)~~] A determination that an application is complete shall:

(a) Indicate that the application is sufficiently complete to be reviewed for approval or disapproval;

(b) Not be determinative of the accuracy of, or weight to be given to, the information contained in the application; and

(c) Not imply that the application has met the review criteria for approval.

Section 6. Notice of Decision. (1) The cabinet shall notify the applicant and any party to the proceeding of the final action on a certificate of need application within three (3) days.

(2) Notification of approval shall be in writing and shall include:

(a) Verification that the review criteria for approval have been met;

(b) Specification of any terms or conditions limiting a certificate of need approval, including limitations regarding certain services or patients. This specification shall be listed on the facility or service's certificate of need and license;

(c) Notice of appeal rights; and

(d) The amount of capital expenditure authorized, if applicable.

(3) Written notification of disapproval shall include:

(a) The reason for the disapproval; and

(b) Notice of appeal rights.

(4) An identical application for certificate of need that is disapproved shall not be refiled for a period of twelve (12) months from the original date of filing, absent a change in circumstances.

Section 7. Deferral of an Application. (1)(a) Except as described in paragraphs (b) and (c) of this subsection, an applicant may defer review of an application a maximum of two (2) times by notifying the cabinet in writing of its intent to defer review.

(b) An applicant shall not defer review of an application filed pursuant to 900 KAR 6:080 to alleviate an emergency circumstance.

(c) If an application has been deferred prior to the effective date of this administrative regulation, an applicant may defer review of the application a maximum of one (1) additional time.

(d)[~~(a)~~]1. If the application has been granted nonsubstantive review status under the provisions of KRS 216B.095(3)(a) through (f), the notice to defer shall be filed pursuant to 900 KAR 6:090 no later than five (5) days prior to the date that the decision is due on the application unless a hearing has been scheduled.

2. If a hearing has been scheduled, the notice to defer shall be filed pursuant to 900 KAR 6:090 no later than six (6) days prior to the date of the hearing.

(e)[~~(b)~~]1. If the application is being reviewed under formal review, the notice to defer shall be filed pursuant to 900 KAR 6:090 no later than ten (10) days prior to the date that the decision is due on the application unless a hearing has been scheduled.

2. If a hearing has been scheduled, the notice to defer shall be filed pursuant to 900 KAR 6:090, no later than eight (8) days prior to the date of the hearing.

(f)[~~(c)~~] If a hearing has been scheduled, the applicant shall also notify all parties to the proceedings in writing of the applicant's intent to defer the application.

(2) If a notice to defer an application for formal review is filed [~~deferral is requested~~], the application shall be deferred to the next regular batching cycle and shall be placed on public notice pursuant to the timetables set forth in 900 KAR 6:060.

(3) If an application for formal review is deferred, an applicant may update its application by providing additional information to the cabinet at least twenty (20) days prior to the date that the deferred application is placed on public notice.

(4) If a notice to defer an application which has been granted nonsubstantive review is filed, the application shall be deferred and shall be placed on public notice in the Certificate of Need Newsletter published the following month.

(5) If an application for nonsubstantive review is deferred, an applicant may update its application by providing additional information to the cabinet at least ten (10) days prior to the date that the deferred application is placed on public notice.

(6) In order for a hearing to be held on a deferred application, a hearing shall be requested by either the applicant or an affected person within:

(a) Ten (10) days of the deferred application being placed on public notice if the application has been granted nonsubstantive review status; or

(b) Fifteen (15) days of the deferred application being placed on public notice if the application is being reviewed under the provision of formal review.

Section 8. Withdrawal of an Application. (1) An applicant may withdraw an application for certificate of need by notifying the cabinet in writing of the decision to withdraw the application prior to the entry of a decision to deny or approve the application.

(2) If a hearing has been scheduled or held on the application, the applicant shall also notify all parties to the proceedings in writing of the applicant's decision to withdraw the application.

(3) If an applicant withdraws a deferred application ***between the effective date of this administrative regulation and[~~within the period from January 1, 2015 through~~]*** June 30, 2015 and submits a new application for the same proposed health facility or service within five (5) years from the date of withdrawal, the cabinet shall apply the application fee which was submitted for the withdrawn application toward the fee assessed pursuant to 900 KAR 6:020 for the new application.

Section 9. Location of New and Replacement Facilities. A

certificate of need approved for the establishment of a new facility or the replacement of an existing facility shall be valid only for the location stated on the certificate.

Section 10. Requests for Reconsideration. (1) Requests for reconsideration shall be filed, pursuant to 900 KAR 6:090, within fifteen (15) days of the date of the notice of the cabinet's final decision relating to:

(a) Approval or disapproval of an application for a certificate of need;

(b) An advisory opinion entered after a public hearing;

(c) Revocation of a certificate of need; or

(d) A show cause hearing conducted in accordance with 900 KAR 6:090.

(2) A copy of the request for reconsideration shall be served by the requester on all parties to the proceedings.

(3) A party to the proceedings shall have seven (7) days from the date of service of the request for reconsideration to file a response to the request with the cabinet.

(4) If a hearing was held pursuant to subsection (1)(a), (b), or (c) of this section, the hearing officer that presided over the hearing shall enter a decision to grant or deny a request for reconsideration within thirty (30) days of the request being filed.

(5) If a hearing was held pursuant to subsection (1)(d) of this section, the secretary shall enter a decision to grant or deny a request for reconsideration within thirty (30) days of the request being filed.

(6) If reconsideration is granted, the hearing shall be held by the cabinet in accordance with the applicable provisions of 900 KAR 6:090, Section 3 or 4, within thirty (30) days of the date of the decision to grant reconsideration, and a final decision shall be entered by the cabinet no later than thirty (30) days following the conclusion of the hearing.

(7) If reconsideration is granted on the grounds that a public hearing was not held pursuant to KRS 216B.085, the applicant shall have the right to waive the reconsideration hearing if the deficiencies in the application can be adequately corrected by submission of written documentation.

EMILY WHELAN PARENTO, Executive Director
AUDREY TAYSE HAYNES, Secretary

APPROVED BY AGENCY: November 12, 2014

FILED WITH LRC: November 13, 2014 at 2 p.m.

CONTACT PERSON: Tricia Orme, Office of Legal Services, 275 East Main Street 5 W-B, Frankfort, Kentucky 40621, phone 502-564-7905, fax 502-564-7573, email tricia.orme@ky.gov.

CABINET FOR HEALTH AND FAMILY SERVICES
Office of Health Benefit and Health Information Exchange
(As Amended at ARRS, December 9, 2014)

900 KAR 10:030. Kentucky Health Benefit Exchange Eligibility and Enrollment in a Qualified Health Plan.

RELATES TO: KRS 194A.050(1), 42 U.S.C. 18031, 45 C.F.R. Parts 155, 156

STATUTORY AUTHORITY: KRS 194A.050(1)

NECESSITY, FUNCTION, AND CONFORMITY: The Cabinet for Health and Family Services,[~~Office of the~~] Kentucky Office of Health Benefit and Health Information Exchange, has responsibility to administer the state-based American Health Benefit Exchange. KRS 194A.050(1) requires the secretary of the cabinet to promulgate administrative regulations necessary to protect, develop, and maintain the health, personal dignity, integrity, and sufficiency of the individual citizens of the Commonwealth; to operate the programs and fulfill the responsibilities vested in the cabinet; and to implement programs mandated by federal law or to qualify for the receipt of federal funds. This administrative regulation establishes the policies and procedures relating to eligibility and enrollment in a qualified health plan in the individual market to be offered on the Kentucky Health Benefit Exchange pursuant to, and in accordance with, 42 U.S.C. 18031 and 45 C.F.R. Parts 155 and 156.

Section 1. Definitions. (1) "Advance payments of the premium tax credit" or "APTC" means payment of the tax credits authorized by 26 U.S.C. 36B and its implementing regulations, which are provided on an advance basis to an eligible individual enrolled in a qualified health plan through an exchange in accordance with[~~section 1412 of the Affordable Care Act,~~] 42 U.S.C. 18082.

(2) "Affordable Care Act" or "ACA" means the Patient Protection and Affordable Care Act, Public Law 111-148, enacted March 23, 2010, as amended by the Health Care and Education Reconciliation Act, Public Law 111-152, enacted March 30, 2010.

(3) "Annual open enrollment period" is defined by 45 C.F.R. 155.410(e).

(4) "Applicant" is defined by 45 C.F.R. 155.20.

(5) "Application filer" is defined by 45 C.F.R. 155.20.

(6) "Benefit year" means a calendar year for which a health plan provides coverage for health benefits.

(7) "Catastrophic plan" means a health plan that is described in and meets the requirements of 45 C.F.R. 156.155.

(8) "COBRA" means continuation of coverage under 29 U.S.C. Part 6.

(9) "Cost sharing" is defined by 45 C.F.R. 155.20.

(10) "Cost-sharing reduction" or "CSR" means a reduction in cost sharing for an eligible individual enrolled in a silver level plan in an exchange or for an individual who is an Indian enrolled in a qualified health plan in an exchange.

(11) "Date of the notice" means the date on the notice plus five (5) calendar days.

(12) "Department of Health and Human Services" or "HHS" means the U.S. Department of Health and Human Services.

(13) "Dependent" is defined by 26 C.F.R. 54.9801-2.

(14) "Enrollee" means a qualified[~~an eligible~~] individual enrolled in a qualified health plan.

(15) "Family size" is defined by 26 C.F.R. 1.36B-1(d)[~~means the number of individuals in a family for whom a taxpayer properly claims a deduction for a personal exemption under Section 151 of the Internal Revenue Code, 26 U.S.C. 151, for the taxable year~~].

(16) "Federal poverty level" or "FPL" means the most recently published federal poverty level, updated periodically in the Federal Register by the Secretary of Health and Human Services under the authority of 42 U.S.C. 9902(2), as of the first day of the annual open enrollment period for coverage in a qualified health plan through the Kentucky Health Benefit Exchange.

(17) "Health plan" is defined by 42 U.S.C. 18021(b)(1).

(18) "Household income" is defined by 26 C.F.R. 1.36B-1(e).

(19) "Indian" is defined by 25 U.S.C. 450b(d).

(20) "Initial open enrollment period" means the period beginning October 1, 2013, and extending through March 31, 2014, during which a qualified individual or qualified employee may enroll in health coverage through an exchange for the 2014 benefit year.

(21) "Insurance affordability program" means one (1) of the following:

(a) A state Medicaid program under title XIX of the Social Security Act, 42 U.S.C. 301 et seq.;

(b) A state children's health insurance program (CHIP) under title XXI of the Social Security Act, 42 U.S.C. 301 et seq.;

(c) A program that makes coverage in a qualified health plan through the exchange with advance payments of the premium tax credit established under section 36B of the Internal Revenue Code, 26 U.S.C. 36B, available to qualified individuals; or

(d) A program that makes available coverage in a qualified health plan through the exchange with cost-sharing reductions established under section 1402 of the Affordable Care Act, 42 U.S.C. 18071.

(22)[~~"Internal Revenue Code" or "Code" means the Internal Revenue Code of 1986.~~

~~(23)~~] "Issuer" is defined by 45 C.F.R. 144.103.

(23)[~~(24)~~] "Kentucky Children's Health Insurance Program" or "KCHIP" means the separate child health program established by the Commonwealth of Kentucky under title XXI of the Social Security Act in accordance with implementing regulations at 42

C.F.R. 457.

(24)[~~(25)~~] "Kentucky Health Benefit Exchange" or "KHBE" means the Kentucky state-based exchange conditionally approved by HHS pursuant to 45 C.F.R. 155.105 to offer a QHP beginning January 1, 2014, that includes an:

(a) Individual exchange; and

(b) Small Business Health Options Program.

(25)[~~(26)~~] "Lawfully present" is defined by 45 C.F.R. 155.20.

(26)[~~(27) "MAGI-based income" is defined by 42 C.F.R. 435.603(e).~~

~~(28)~~] "Medicaid" means coverage in accordance with Title XIX of the Social Security Act, 42 U.S.C. 1396 et seq. as amended.

(27)[~~(29)~~] "Minimum essential coverage" is defined by 26 U.S.C. 5000A-2.

(28)[~~(30)~~] "Non-citizen" is defined by 45 C.F.R. 155.300.

(29)[~~(31)~~] "Personal exemption deduction" means an amount that can be deducted from taxable income based on the exemption given to any tax filer who cannot be claimed as a dependent by another tax filer.

(30)[~~(32)~~] "Public insurance program" means an insurance program that:

(a) Is paid for by a governmental entity and provided to consumers; and

(b) Includes Medicare, Medicaid, or Children's Health Insurance Program.

(31)[~~(33)~~] "Qualified Health Plan" or "QHP" means a health plan that meets the standards described in 45 C.F.R. 156 Subpart C and that has in effect a certification issued by the office.

(32)[~~(34)~~] "Qualified individual" is defined by 45 C.F.R. 155.20[~~means an individual who has been determined eligible to enroll through the KHBE in a QHP in the individual market~~].

(33)[~~(35)~~] "Qualifying coverage in an eligible employer-sponsored plan" means coverage in an eligible employer-sponsored plan that meets the affordability and minimum value standards specified in 26 U.S.C. 36B(c)(2)(C).

(34)[~~(36)~~] "Shared responsibility payment" means a penalty imposed for failing to meet the requirement to maintain minimum essential coverage in accordance with 26 U.S.C. 5000A.

(35)[~~(37)~~] "Silver level" is defined by 42 U.S.C. 18022(d)(1)(B).

(36)[~~(38)~~] "Special enrollment period" means a period during which a qualified individual or enrollee who experiences certain qualifying events may enroll in, or change enrollment in, a QHP through the KHBE outside the initial and annual open enrollment periods.

(37)[~~(39)~~] "Tax filer" is defined by 45 C.F.R. 155.300.

Section 2. Eligibility Standards to Enroll in a Qualified Health Plan. (1) An applicant shall be eligible to enroll in a QHP through the KHBE if the applicant:

(a) 1. Is a citizen or national of the United States;

2. Is a non-citizen who is lawfully present in the United States and is reasonably expected to become a citizen or national; or

3. Is a non-citizen who is lawfully present for the entire period for which enrollment is sought;

(b) Except for an incarceration pending a disposition of a charge, is not incarcerated; and

(c) Meets a residency requirement in 45 C.F.R. 155.305(a)(3).

(2) An applicant may submit an application as described in 45 C.F.R. 155.405 for a determination of eligibility at any time during a year; however, the applicant shall only enroll during an open enrollment or special enrollment period[~~periods~~].

(3) An applicant determined eligible for enrollment in a QHP as set forth in subsection (1) of this section shall be eligible to enroll in a QHP during:

(a)***[~~An initial open enrollment period as set forth in Section 6(2) of this administrative regulation;~~***

[~~(b)~~] An annual open enrollment period as set forth in Section ***6(1)[~~6(3)~~]*** of this administrative regulation; or

(b)[~~(c)~~] A special enrollment period as set forth in ***Section[~~Sections 6(4) or~~]*** 7 of this administrative regulation.

(4) An applicant determined eligible to enroll in a QHP who does not select a QHP within the applicable enrollment period as set forth in Sections 6 or 7 or is not eligible for an enrollment period, who seeks a new enrollment period prior to the date on which the applicant's eligibility is redetermined as set forth in Section 9 of this administrative regulation, shall attest to whether or not information affecting the applicant's eligibility has changed since the most recent eligibility determination.

(5) An applicant shall submit an application for enrollment in a QHP:

(a) Via the KHBE Web site at www.kynect.ky.gov;

(b) By telephone by contacting the KHBE contact center at 1-800-459-6328;

(c) By mail; or

(d) In person.

(6)(a) An applicant who has a Social Security number shall provide the number to the KHBE.

(b) An individual who is not seeking coverage for himself or herself shall not be required to provide a Social Security number, except as specified in Section 3(8) of this administrative regulation.

(7) In accordance with 45 C.F.R. 155.310(a)(2), an individual who is not seeking coverage for himself or herself on any application or any supplemental form shall not be required to provide information regarding:

(a) Citizenship;

(b) Status as a national; or

(c) Immigration status.

(8)(a) Except as specified in Section 11(2) of this administrative regulation, an applicant who requests an eligibility determination for an insurance affordability program shall have an eligibility determination for all insurance affordability programs.

(b) An applicant who requests an eligibility determination for a QHP only shall not have an eligibility determination for an insurance affordability program.

(9) An applicant shall not provide information beyond the minimum amount necessary to determine eligibility and enrollment through the KHBE.

(10) If an application filer submits an application that does not include sufficient information for the KHBE to make an eligibility determination for enrollment in a QHP or for an insurance affordability program, the KHBE shall:

(a) Provide notice to the applicant that additional information is needed to complete an eligibility determination;

(b) Provide the applicant with a period of ninety (90) days to provide the requested information;***[~~and~~]***

(c) Not proceed with an applicant's eligibility determination or provide APTC or CSR ***until the information is received; and***

(d) Consider the application null and void if the requested information is not received within ninety (90) days.

Section 3. Eligibility Standards for Advanced Payments of the Premium Tax Credit. (1) A tax filer shall be eligible for APTC if:

(a) The tax filer is expected to have a household income greater than or equal to 100 percent of the FPL but not more than 400 percent of the FPL for the benefit year for which coverage is requested; and

(b) One (1) or more applicants for whom the tax filer expects to claim a personal exemption deduction on the tax filer's tax return for the benefit year:

1. Meets the requirements for eligibility for enrollment in a QHP through the KHBE as specified in Section 2 of this administrative regulation; and

2. Is not eligible for minimum essential coverage, with the exception of coverage in the individual market, in accordance with 26 C.F.R. 1.36B-2(a)(2) and (c).

(2) A tax filer who is a non-citizen and lawfully present and ineligible for Medicaid for reason of immigration status shall be eligible for APTC if:

(a) The tax filer meets the requirement in subsection (1)(b) of this section;

(b) The tax filer is expected to have a household income of less than 100 percent of the FPL for the benefit year for which coverage is requested; and

(c) One (1) or more applicants for whom the tax filer expects to claim a personal exemption deduction on the tax filer's tax return for the benefit year is:

1. A non-citizen who is lawfully present; and

2. Not eligible for Medicaid for reason of immigration status.

(3) A tax filer shall attest that one (1) or more applicants for whom the tax filer attests that a personal exemption deduction for the benefit year shall be claimed is enrolled in a QHP that is not a catastrophic plan.

(4) A tax filer shall not be eligible for APTC if HHS notifies the KHBE that APTCs were made on behalf of the tax filer or tax filer's spouse for a year in accordance with 45 C.F.R. 155.305(f)(4).

(5) An APTC amount shall be:

(a) Calculated in accordance with 26 C.F.R. 1.36B-3; and

(b) Allocated between QHPs and stand-alone dental policies in accordance with 45 C.F.R. 155.340(e).

(6) An applicant for APTC may accept less than the full amount of APTC for which the applicant is determined eligible.

(7) An APTC shall be authorized by the KHBE on behalf of a tax filer only if the KHBE obtains necessary attestations from the tax filer that:

(a) The tax filer shall file an income tax return for the benefit year in accordance with 26 U.S.C. 6011 and 6012;

(b) If the tax filer is married, a joint tax return shall be filed for the benefit year;

(c) No other taxpayer shall be able to claim the tax filer as a dependent for the benefit year; and

(d) The tax filer shall claim a personal exemption deduction on the tax filer's return for the applicants identified as members of the tax filer's family, including the tax filer and the spouse of the tax filer, in accordance with 45 C.F.R. 155.305(f)(4).

(8) An application filer who is not an applicant shall provide the Social Security number of a tax filer only if the applicant attests that the tax filer:

(a) Has a Social Security number; and

(b) Filed a tax return for the year for which tax data would be utilized for verification of household income and family size.

(9) The effective date of eligibility for APTC shall be:

(a) For an initial eligibility determination, in accordance with the dates specified in Section 6***[(1), (2), (3) and (4)]*** of this administrative regulation, as applicable; and

(b) For a redetermination, in accordance with the dates specified in 45 C.F.R. 155.330(f) and 155.335(i), as applicable.

(10) An employer shall be notified of an employee's eligibility for APTC in accordance with 45 C.F.R. 155.310(h).

Section 4. Eligibility Standards for Cost-sharing Reductions. (1) An applicant shall be eligible for cost-sharing reductions if the applicant:

(a) Meets the eligibility requirements for enrollment in a QHP as set forth in Section 2 of this administrative regulation;

(b) Meets the requirements for APTC as set forth in Section 3 of this administrative regulation;

(c) Is expected to have a household income that does not exceed 250 percent of the FPL for the benefit year for which coverage is requested; and

(d) Except for an enrollee who is an Indian and whose eligibility is governed by Section 11 of this administrative regulation, enrolls in a silver level QHP through the KHBE.

(2) An eligibility determination for cost-sharing reductions shall be based on the following categories:

(a) 1. An individual who is expected to have a household income greater than or equal to 100 percent of the FPL and less than or equal to 150 percent of the FPL for the benefit year for which coverage is requested; or

2. An individual who is eligible for APTC as set forth in Section 3(2) of this administrative regulation, and who has a household income less than 100 percent of the FPL;

(b) An individual who is expected to have a household income greater than 150 percent of the FPL and less than or equal to 200 percent of the FPL for the benefit year for which coverage is requested; and

(c) An individual who is expected to have a household income greater than 200 percent of the FPL and less than or equal to 250 percent of the FPL for the benefit year for which coverage is requested.

(3)(a) If two (2) or more individuals enrolled in the individual market under a single policy would be eligible for different cost sharing amounts if enrolled in separate policies, the individuals under the single policy shall be deemed by the KHBE to be collectively eligible only for the last category listed in paragraph (b) of this subsection for which all the individuals covered by the policy would be eligible.

(b) The categories of eligibility shall be an individual:

1. Not eligible for changes to cost sharing;

2. Described in 45 C.F.R. 155.350(b);

3. Described in subsection (2)(c) of this section;

4. Described in subsection (2)(b) of this section;

5. Described in subsection (2)(a) of this section; and

6. Described in 45 C.F.R. 155.350(a).

(4) The effective date of eligibility for cost-sharing reductions shall be:

(a) For an initial eligibility determination, in accordance with the dates specified in Section 6***[(1), (2), (3), and (4)]*** of this administrative regulation, as applicable; and

(b) For a redetermination, in accordance with the dates specified in 45 C.F.R. 155.330(f) and 45 C.F.R. 155.335(i), as applicable.

(5) An employer shall be notified of an employee's eligibility for cost-sharing reductions in accordance with 45 C.F.R. 155.310(h).

Section 5. Verification processes. (1) Verification of eligibility for an applicant seeking enrollment in a QHP shall be performed in accordance with:

(a) 45 C.F.R. 155.315; and

(b) Kentucky QHP/APTC Eligibility Verification Plan as incorporated by reference in this administrative regulation.

(2) Verification of eligibility for an applicant or tax filer who requests an eligibility determination for an insurance affordability program shall be in accordance with:

(a) 45 C.F.R. 155.320; and

(b) Kentucky QHP/APTC Eligibility Verification Plan as incorporated by reference in this administrative regulation.

Section 6. QHP Enrollment Periods and Effective Dates of Coverage. (1)***(a)*** For a benefit year beginning on or after January 1, 2015, a qualified individual shall***[:***

~~(a)~~] be able to enroll in a QHP**,** or an enrollee shall be able to change from one (1) QHP to another**,** during an annual open enrollment period set forth in 45 C.F.R. 155.410 for that benefit year.***[~~; and~~]***

(b) ***The[~~Have an~~]*** effective date of coverage ***for an enrollment or change of enrollment under paragraph (a) of this subsection shall be*** in accordance with 45 C.F.R. 155.335(i).

(2)[~~A qualified individual shall enroll in a QHP or an enrollee shall change from one (1) QHP to another QHP during the initial open enrollment period.~~

~~(2) A qualified individual or enrollee who selects a QHP during the initial open enrollment period shall have an effective date of coverage of:~~

~~(a) January 1, 2014, if the QHP selection is received on or before December 15, 2013;~~

~~(b) The first day of the following month, if the QHP selection is received between the first and fifteenth day of the month for any month between January, 2014, and March 31, 2014; or~~

~~(c) The first day of the second following month, if the QHP selection is received between the sixteenth and last day of the month for any month between December, 2013, and March 31, 2014.~~

~~(3)(a) For a benefit year beginning on or after January 1, 2015, a qualified individual shall be able to enroll in a QHP or an enrollee shall be able to change from one (1) QHP to another QHP during an annual open enrollment period that:~~

~~1. Begins October 15 of the preceding calendar year; and~~

~~2. Extends through December 7 of the preceding calendar year.~~

~~(b) A qualified individual or enrollee who selects a QHP during an annual open enrollment period shall have an effective date of coverage of January 1 of the following benefit year.~~

~~(4)~~](a) A qualified individual shall enroll in a QHP or an enrollee shall change from one (1) QHP to another QHP during a special enrollment period as specified in Section 7 of this administrative regulation.

(b) A qualified individual or an enrollee who selects a QHP during a special enrollment period shall have an effective date of coverage as set forth in Section 7 of this administrative regulation.

(3)[~~(5)(a)~~] An initial enrollment in a QHP shall not be effective until the first month's premium is received by the QHP issuer.[~~(b) The first month's premium shall be received by a QHP issuer no later than seven (7) days after an effective date of coverage as set forth in subsection (2), (3)(b), or (4)(b) of this section.~~]

Section 7. Special Enrollment Periods. (1) Except as specified in subsection (3) of this section, a qualified individual or enrollee shall have sixty (60) days from the date of a qualifying event as set forth in subsection (2) of this section to select a QHP.

(2) A qualified individual may enroll in a QHP or an enrollee or a dependent of an enrollee may change QHPs during a special enrollment period if:

(a) The qualified individual or a dependent of the qualified individual:

1. Loses minimum essential coverage;

2.***[~~Is~~]*** Enrolled in any non-calendar year health insurance ***coverage[~~policy that will expire in 2014 as described in 45 C.F.R. 147.104(b)(2)~~]***, even if the qualified individual or a dependent of the qualified individual has the option to renew the expiring non-calendar year individual health insurance ***coverage[~~policy~~]***;

3. Loses pregnancy-related coverage described under 42 U.S.C.1396a (a)(10)(A)(i)(IV) and 42 U.S.C. 1396a(a)(10)(A)(ii)(IX); or

4. Loses medically needy coverage as described under 42 U.S.C. 1396a(a)(10)(C) only once per calendar year;

(b) The qualified individual gains a dependent or becomes a dependent through marriage, birth, adoption, placement in foster care, or placement for adoption;

(c) The qualified individual or dependent of the qualified individual, who was not previously a citizen, national, or lawfully present, gains status as a citizen, national, or lawfully present;

(d) The qualified individual or dependent of the qualified individual enrolls or fails to enroll in a QHP due to an error, misrepresentation, or inaction of an officer, employee, or agent of the Kentucky Office of Health Benefit and Health Information Exchange[~~OKHBE~~] or HHS;

(e) The enrollee or dependent of the enrollee demonstrates to the KHBE that the QHP in which the enrollee or the dependent of the enrollee is enrolled substantially violated a provision of its contract in relation to the enrollee;

(f) The enrollee is determined newly eligible or newly ineligible for APTC or has a change in eligibility for CSR;

(g) The enrollee's dependent enrolled in the same QHP is determined newly eligible or ineligible for APTC or has a change in eligibility for CSR;

(h) The qualified individual or a dependent of the qualified individual who is enrolled[~~in qualifying coverage~~] in an employer-sponsored plan is determined newly eligible for APTC in part on a finding that the individual will no longer be eligible for qualifying coverage in the employer-sponsored plan in accordance with 26 C.F.R. 1.36B-2(c)(3) within[~~in~~] the next sixty (60) days and is allowed to terminate existing coverage;

(i)[~~(h)~~] The qualified individual or enrollee or a dependent of the qualified individual or the enrollee gains access to new QHPs as a result of a change in residence;

(j)[~~(i)~~] The qualified individual is an Indian who may enroll in a QHP or change from one (1) QHP to another QHP one (1) time per month;

(k)[~~or (j)~~] The qualified individual or a dependent of the qualified individual demonstrates to the Kentucky Office of Health Benefit and Health Information Exchange[~~OKHBE~~] that the individual meets other exceptional circumstances; or

(l) The Kentucky Office of Health Benefit and Health Information Exchange determines that as a result of misconduct on the part of a non-Kentucky Office of Health Benefit and Health Information Exchange entity providing enrollment assistance or conducting enrollment activities, a qualified individual or enrollee, or dependent of a qualified individual or enrollee:

1. Was not enrolled in QHP coverage;

2. Was not enrolled in the QHP selected by the qualified individual or enrollee; or

3. Is eligible but is not receiving APTC or CSRs.

(3) A[~~The~~] qualified individual or enrollee, or a dependent of a[~~the~~] qualified individual or enrollee described in subsection (2)(h)[~~(2)(g)~~] of this section may access this special enrollment period sixty (60) days prior to the end of the individual's qualifying coverage in an eligible employer-sponsored plan.

(4) The date of the triggering event for the loss of minimum essential coverage shall be:

(a) ***For[~~In the case of~~]*** a decertification of a QHP as set forth in 900 KAR 10:010, the date of the notice of decertification; [~~or~~]

(b) ***For[~~In the case of~~]*** a loss of coverage as set forth in subsection (2)(a)1. of this section, the last day the qualified individual would have coverage under the qualified individual's previous plan or coverage;

(c) ***For[~~In the case of~~]*** a loss of coverage as set forth in subsection (2)(a)2. of this section, the date***[~~in 2014~~]*** of the expiration of the non-calendar year policy;

(d) ***For[~~In the case of~~]*** a loss of coverage as set forth in subsection (2)(a)3. of this section, the last day the qualified individual would have pregnancy-related coverage; or

(e) ***For[~~In the case of~~]*** a loss of coverage as set forth in subsection (2)(a)4. of this section, the last day the qualified individual would have medically needy coverage[~~For all other cases, the date the qualified individual or dependent of the qualified individual loses eligibility for minimum essential coverage~~].

(5) Loss of minimum essential coverage shall include those circumstances described in 26 C.F.R. 54.9801–6(a)(3)(i) through (iii).

(6) Loss of minimum essential coverage shall not include termination or loss due to:

(a) Failure to pay premiums on a timely basis, including COBRA premiums prior to expiration of COBRA coverage; or

(b) A situation allowing for a rescission as specified in 45 C.F.R. 147.128.

(7) Except as specified in subsection (8) of this section, a qualified individual or enrollee who selects a QHP during a special enrollment period shall have an effective date of coverage of:

(a) The first day of the following month for a selection made between the first and the fifteenth day of any month; or

(b) The first day of the second following month for a selection made between the sixteenth and last day of any month.

(8) A qualified individual or enrollee who selects a QHP during a special enrollment period:

(a) For coverage following a birth, adoption, placement in foster care, or placement for an adoption shall have as the effective date of coverage:

1. The date of the birth, adoption, placement in foster care, or placement for adoption; or

2. If elected by the qualified individual or enrollee, the first day of the month following the date of birth, adoption, placement in foster care, or placement for adoption;

(b) For coverage following a marriage[~~or loss of minimum essential coverage~~] shall have as the effective date of coverage the first day of the month following the selection of a QHP;

(c) For coverage following a loss of coverage described in subsection (2)(a) or (2)(h) of this section, if the plan selection is made:

1. Before or on the day of the loss of coverage, ***shall have as*** the***[~~coverage~~]*** effective date ***of coverage[~~shall be~~]*** the first day of the month following the loss of coverage; or

2. After the loss of coverage, ***shall have as*** the***[~~coverage~~]*** effective date ***of coverage[~~shall be~~]*** the first day of the month following plan selection; or

(d) For a special enrollment described in subsection (2)(d), (e), (k), or (l) of this section, ***shall have*** the effective date of

coverage***[shall be]*** based on the circumstance of the special enrollment period[~~marriage or loss of minimum essential coverage~~].

(9)(a) An individual described in subsection (2)(h)[~~(2)(g)~~] of this section may access a special enrollment period sixty (60) days prior to the end of the individual's qualifying coverage in the employer-sponsored plan.

(b) An individual described in subsection (2)(a) of this section shall have sixty (60) calendar days before and after the loss of coverage to select a QHP.

(c) An individual who accesses a special enrollment as set forth in paragraph (a) or (b) of this subsection shall not be eligible for APTCs until the end of the individual's qualifying coverage through the eligible employer-sponsored plan or loss of minimum essential coverage.

(10) For a determination of eligibility for a special enrollment described in subsection (2)(d), (k), or (l) of this section, KHBE shall follow HHS guidance as set forth in:

(a) Guidance for Issuers on Special Enrollment Periods for Complex Cases in the Federally-facilitated Marketplace after the Initial Open Enrollment Period and Special Enrollment Period, as incorporated by reference in this administrative regulation;

(b) Guidance for Issuers on People "In Line" for the Federally-facilitated Marketplace at the end of the Initial Open Enrollment Period, as incorporated by reference in this administrative regulation; or

(c) Special Enrollment Periods and Hardship Exemptions for Persons Meeting Certain Criteria, as incorporated by reference in this administrative regulation.

Section 8. Eligibility Redetermination During a Benefit Year. (1) Eligibility shall be redetermined for an enrollee during a benefit year if the KHBE receives and verifies:

(a) New information reported by an enrollee; or

(b) Updated information obtained in accordance with 45 C.F.R. 155.315(b)(1) and 45 C.F.R. 155.320(b) that identifies:

1. A death; or

2. For an enrollee who is receiving APTCs or CSRs, a change in eligibility for a public insurance program.

(2) Except as specified in subsection (3) of this section, an enrollee or an application filer, on behalf of an enrollee, shall report within thirty (30) days:

(a) A change related to an eligibility standard in Section 2, 3, 4, 10, or 11 of this administrative regulation; and

(b) Via a method described in Section 2(5) of this administrative regulation.

(3) An enrollee who did not request an eligibility determination for an insurance affordability program shall not report a change related to income.

(4) If new information provided by an enrollee in accordance with subsection (1)(a) of this section is verified:

(a) Eligibility shall be redetermined in accordance with Section 2, 3, 4, 10, or 11 of this administrative regulation;

(b) The enrollee shall be notified of the redetermination in accordance with the requirements in 45 C.F.R. 155.310(g); and

(c) If applicable, the enrollee's employer shall be notified in accordance with the requirement specified in 45 C.F.R. 155.310(h).

(5) If updated information obtained in accordance with subsection (1)(b) of this section regarding death or related to eligibility not regarding income, family size, or family composition is identified, an enrollee shall:

(a) Be notified by the KHBE of:

1. The updated information; and

2. The projected enrollee's eligibility determination after consideration of the information; and

(b) Have thirty (30) days from the date of the notice in paragraph (a) of this subsection to notify the KHBE if the information is inaccurate.

(6) If an enrollee responds to the notice in subsection (5)(a) of this section, contesting the updated information in the notice, the KHBE shall proceed in accordance with 45 C.F.R. 155.315(f).

(7) If an enrollee does not respond to the notice in subsection (5)(a) of this section within the thirty (30) day timeframe specified in subsection (5)(b) of this section, the KHBE shall:

(a) Redetermine eligibility in accordance with Section 2, 3, 4, 10, or 11 of this administrative regulation; and

(b) Notify the enrollee regarding the determination in accordance with the requirements specified in 45 C.F.R. 155.310(g).

(8) With the exception of information regarding death, if updated information regarding income, family size, or family composition is identified, an enrollee shall:

(a) Be notified by the KHBE of:

1. The updated information regarding income, family size, and family composition obtained in accordance with subsection (1)(b) of this section; and

2. The projected eligibility determination after consideration of the information; and

(b) Have thirty (30) days from the date of the notice to:

1. Confirm the updated information; or

2. Provide additional information.

(9) If the enrollee responds to the notice in subsection (8)(a) of this section by confirming the updated information, the KHBE shall:

(a) Redetermine the enrollee's eligibility in accordance with Section 2, 3, 4, 10, or 11 of this administrative regulation; and

(b) Notify the enrollee regarding the determination in accordance with the requirements specified in 45 C.F.R. 155.310(g).

(10) If the enrollee does not respond to the notice in subsection (8)(a) of this section within the thirty (30) day timeframe specified in subsection (8)(b) of the section, the KHBE shall maintain the enrollee's existing eligibility determination without considering the updated information in subsection (8)(a) of this section.

(11) If the enrollee responds with more updated information, the KHBE shall verify the updated information in accordance with 45 C.F.R. 155.315 and 155.320.

(12) The effective date of a change resulting from a redetermination pursuant to this section shall be in accordance with 45 C.F.R. 155.330(f).

(13) The amount of an APTC or eligibility for a cost-sharing reduction as a result of an eligibility redetermination in accordance with this section shall be recalculated in accordance with 45 C.F.R. 155.330(g).

Section 9. Annual Eligibility Redetermination. (1) A qualified individual shall:

(a) Have an annual redetermination of eligibility; and

(b) Be sent a notice of the annual redetermination that includes:

1. The qualified individual's projected annual household income and family size[~~data obtained under subsection (2) of this section;~~

~~2. The data used in the qualified individual's most recent eligibility determination~~]; and

2.[~~3.~~] The projected eligibility determination for the following year, after considering the information in subparagraph 1. of this paragraph.

(2)(a) A qualified individual requesting an eligibility determination for an insurance affordability program shall authorize the release of updated tax return information[~~, data regarding Social Security benefits, and data regarding MAGI-based incomes as described in 45 C.F.R. 155.320(c)(1)~~] for use in the qualified individual's eligibility redetermination.

(b) Eligibility shall not be redetermined for a qualified individual requesting an eligibility determination for an insurance affordability program who does not authorize the release of updated tax return information.

(3) A qualified individual may authorize the release of tax return information for a period of no more than five (5) years based on a single authorization, if the authorization permits the qualified individual to:

(a) 1. Decline to authorize the release of updated tax return information; or

2. Authorize the release of updated tax return information for fewer than five (5) years; and

(b) Discontinue, change, or renew the authorization at any

time.

(4) A qualified individual, an application filer, or an authorized representative, on behalf of the enrollee, shall[~~: (a)~~] report any changes with respect to the information listed in the notice described in subsection (1)(b) of this section:

(a)[~~1.~~] Within thirty (30) days from the date of the notice; and

(b)[~~2.~~] Via a method listed in Section 2(5) of this administrative regulation[~~; and (b) Sign and return the notice described in subsection (1)(b) of this section within thirty (30) days of the date of the notice~~].

(5) Any information reported by a qualified individual under subsection (4) of this section shall be verified as set forth in Section 5 of this administrative regulation.

(6)[~~For a qualified individual who fails to sign and return the notice described in subsection (1)(b) of this section within the thirty (30) day period specified in subsection (4) of this section, eligibility shall be redetermined as set forth in subsection (7)(a) of this section.~~

~~(7)~~]

(a) After the thirty (30) day period specified in subsection (4) of this section:

1. Eligibility of a qualified individual shall be redetermined in accordance with Section 2, 3, 4, 10, or 11 of this administrative regulation using the information provided in the notice, as supplemented with any information reported by the qualified individual verified in accordance with Section 5 of this administrative regulation;

2. The qualified individual shall be notified in accordance with the requirements in 45 C.F.R. 155.310(g); and

3. If applicable, the qualified individual's employer shall be notified in accordance with 45 C.F.R. 155.310(h).

(b) If a qualified individual reports a change with respect to the information provided in the notice specified in subsection (1)(b) of this section that has not been verified by the KHBE as of the end of the thirty (30) day period specified in subsection (4) of this section, eligibility shall be redetermined after verification in accordance with Section 5 of this administrative regulation.

(7)[~~(8)~~] The effective date of a redetermination in accordance with this section shall be the later of:

(a) The first day of the coverage year following the year in which the notice in subsection (1)(b) of this section is issued to the qualified individual; or

(b) In accordance with 45 C.F.R. 155.330(f).

(8)[~~(9)~~] If an enrollee remains eligible for coverage in a QHP upon annual redetermination and has not terminated coverage from the QHP in accordance with Section 13 of this administrative regulation, the enrollee shall:

(a) Remain in the QHP selected the previous year that may include modifications that shall be approved by the Department of Insurance; or

(b) Be enrolled by KHBE in a QHP that is substantially similar that shall be approved by the Department of Insurance[~~unless the enrollee terminates coverage from the QHP in accordance with Section 13 of this administrative regulation~~].

(9) If an enrollee remains eligible for coverage in a QHP upon annual redetermination, the enrollee may change from one (1) QHP to another.

(10) Eligibility shall not be redetermined if a qualified individual was redetermined eligible in accordance with this section during the prior year, and the qualified individual was not enrolled in a QHP at the time of the redetermination and has not enrolled in a QHP since the redetermination.

Section 10. Eligibility to Enroll in a QHP that is a Catastrophic Plan. (1) In addition to the requirements in Section 2 of this administrative regulation, to enroll in a QHP that is a catastrophic plan, an applicant shall:

(a) Not have attained the age of thirty (30) before the beginning of the plan year; or

(b) Have a certificate of exemption from the shared responsibility payment issued by the KHBE or HHS for a plan year in accordance with:

1. 26 U.S.C. 5000A(e)(1); or

2. 26 U.S.C. 5000A(e)(5).

(2) Verification related to eligibility for enrollment in a QHP that is a catastrophic plan shall be in accordance with 45 C.F.R. 155.315(j).

Section 11. Special Eligibility Standards and Processes for Indians. (1) An applicant who is an Indian shall be eligible for the special cost-sharing described in section 1402(d)(2) of the ACA, 42 U.S.C. 18071, if the applicant:

(a) Meets the requirements specified in 45 C.F.R. 155.305(a) and (f);

(b) Is expected to have a household income that does not exceed 300 percent of the FPL for the benefit year for which coverage is requested; and

(c) Enrolls in a QHP through the KHBE.

(2) An applicant who is an Indian shall have an eligibility determination for the special cost-sharing described in section 1402(d)(2) of the ACA, 42 U.S.C. 18071, without requesting an eligibility determination for an insurance affordability program.

Section 12. Eligibility Determination and Notification Standards. (1) Eligibility shall be determined in accordance with 45 C.F.R. 155.310(e).

(2) Notifications regarding eligibility determinations shall be made in accordance with 45 C.F.R. 155.310(g).

Section 13. Termination of Coverage. (1) To terminate coverage in a QHP, an enrollee, including an enrollee who has obtained other minimum essential coverage, shall submit a request:

(a) Via the KHBE Web site at www.kynect.ky.gov;

(b) By telephone by contacting the KHBE contact center at 1-800-459-6328;

(c) To the QHP issuer;

(d) By mail; or

(e) In person.

(2) At the time of QHP selection, an enrollee in a QHP shall remain in a QHP if the enrollee:

(a) Has been identified as eligible for other minimum essential coverage through the data matching described in 45 C.F.R. 155.330(d); and

(b) Does not request termination in accordance with subsection (1) of this section.

(3) The last day of coverage of an enrollee who terminates coverage in accordance with subsection (1) of this section shall be:

(a) The termination date requested by the enrollee if the enrollee provides reasonable notice in accordance with subsection (7) of this section;

(b) Fourteen (14) days after the termination is requested by the enrollee, if the enrollee does not provide reasonable notice in accordance with subsection (7) of this section;

(c) A date determined by the issuer of an enrollee's QHP if the issuer is able to terminate coverage in fewer than fourteen (14) days and the enrollee requests an earlier termination effective date; or

(d) If the enrollee is newly eligible for Medicaid or KCHIP, the day before coverage in Medicaid or KCHIP begins.

(4) An enrollee's health coverage shall be terminated by an issuer if:

(a) The enrollee is no longer eligible for coverage in a QHP through the KHBE;

(b)1. The enrollee has failed to pay a premium; and

2.a. A three (3) month grace period required for an individual receiving an APTC has been exhausted as described in 45 C.F.R. 156.270(g); or

b. A thirty (30) day grace period required by KRS 304.17A-243 for an individual not receiving an APTC has been exhausted;

(c) The enrollee's coverage is rescinded in accordance with 45 C.F.R. 147.128 or KRS 304.14-110;

(d) The enrollee is enrolled in a QHP that:

1. Has been decertified pursuant to 900 KAR 10:010; or

2. Has withdrawn from participation in the KHBE; or

(e) The enrollee changes from one (1) QHP to another during

an open enrollment period or special enrollment period in accordance with Section 6 or 7 of this administrative regulation.

(5) The last day of coverage of an enrollee shall be:

(a) If terminated in accordance with subsection (4)(a) of this section, the last day of the month following the month in which the notice described in subsection (7) of this section is sent by KHBE, unless the enrollee requests an earlier termination date in accordance with subsection (3) of this section;

(b) If terminated in accordance with subsection (4)(b)2.a. of this section, the last day of the first month of the three (3) month grace period; or

(c) If terminated in accordance with subsection (4)(b)2.b. of this section, in accordance with KRS 304.17A-245.

(6) For an enrollee who is terminated in accordance with subsection (4)(e) of this section, the last day of coverage in an enrollee's prior QHP shall be the day before the effective date of coverage in the enrollee's new QHP.

(7) Reasonable notice shall be fourteen (14) calendar days from the requested date of termination of coverage.

Section 14. Authorized Representative. (1) An individual or employee may designate an individual or organization as an authorized representative:

(a) 1. At the time of application; or

2. At another time chosen by the individual or employee;

(b) Through a method described in 45 C.F.R. 155.405(c)(2);

(c) In writing with a signature or other legally binding format; and

(d) Through a method described in Section 2(5) of this administrative regulation.

(2) An authorized representative shall comply with state and federal laws regarding:

(a) Conflict of interest; and

(b) Confidentiality of information.

(3) An applicant may authorize a representative to:

(a) Sign an application on behalf of the applicant;

(b) Submit an update or respond to a redetermination of eligibility for the applicant in accordance with Section 8 or 9 of this administrative regulation;

(c) Receive a copy of a notice or communication from the KHBE;

(d) Make an appeal request on behalf of an appellant; or

(e) Act on behalf of the individual or employee in a matter with the KHBE.

(4) The designation of an authorized representative shall be valid until:

(a) An applicant or employee:

1. Changes the authorization; or

2. Notifies the KHBE and the authorized representative, through a method described in 45 C.F.R. 155.405(c), that the authorized representative is no longer authorized to act on behalf of the individual or employee; or

(b) The authorized representative informs the KHBE and the individual or employee that the authorized representative is no longer acting as the authorized representative.

Section 15. Appeals. (1) An applicant, a qualified individual, or an enrollee shall have the right to appeal an adverse determination.

(2) An applicant shall have the right to appeal an exemption of the shared responsibility payment.

(3) An applicant, qualified individual, or enrollee shall have the right to appeal an eligibility determination for Medicaid or KCHIP in accordance with 907 KAR 1:560.

(4) An employer shall have the right to appeal a determination of an employee's eligibility for APTC or CSR.

Section 16. Incorporation by Reference. (1) The following material is incorporated by reference:

(a) "Kentucky QHP/APTC Eligibility Verification Plan", June 2013;

(b) "Guidance for Issuers on Special Enrollment Periods for Complex Cases in the Federally-facilitated Marketplace after the Initial Open Enrollment Period and Special Enrollment Period", March 26, 2014;

(c) "Guidance for Issuers on People "In Line" for the Federally-facilitated Marketplace at the end of the Initial Open Enrollment Period", March 26, 2014; and

(d) "Special Enrollment Periods and Hardship Exemptions for Persons Meeting Certain Criteria", May 2, 2014[~~, is incorporated by reference~~].

(2) This material may be inspected, copied, or obtained, subject to applicable copyright law, at the Office of the Kentucky Health Benefit Exchange, 12 Mill Creek Park, Frankfort, Kentucky 40601, Monday through Friday, 8 a.m. to 4:30 p.m., or from its Web site at www.healthbenefitexchange.ky.gov.

CARRIE BANAHAN, Executive Director
AUDREY TAYSE HAYNES, Secretary

APPROVED BY AGENCY: October 8, 2014

FILED WITH LRC: October 9, 2014 at 1 p.m.

CONTACT PERSON: Tricia Orme, Office of Legal Services, 275 East Main Street 5 W-B, Frankfort, Kentucky 40621, (502) 564-7905, fax (502) 564-7573, tricia.orme@ky.gov.

CABINET FOR HEALTH AND FAMILY SERVICES
Department for Public Health
Office of Vital Statistics
(As Amended at ARRS, December 9, 2014)

901 KAR 5:025. Kentucky Electronic Death Registration System.

RELATES TO: KRS 213.076

STATUTORY AUTHORITY: KRS 194A.050, 213.021, 213.076

NECESSITY, FUNCTION, AND CONFORMITY: KRS Chapter 213 authorizes the Cabinet for Health and Family Services to regulate the registration of deaths in Kentucky. Pursuant to KRS 213.076(1), effective January 1, 2015, all certificates of death shall be filed with the cabinet using the Kentucky Electronic Death Registration System. ***KRS 213.021 requires the cabinet to promulgate administrative regulations to implement KRS Chapter 213.*** This administrative regulation establishes a uniform procedure for the filing of all certificates of death through the Kentucky Electronic Death Registration System.

Section 1. Definitions. (1) "Funeral director" is defined by KRS ***316.010(8)[~~316.080~~]***.

(2) "Kentucky Electronic Death Registration System" or "KY-EDRS" means the system established by the state registrar for accepting certificates of death through electronic means.

(3) "Medical certifier" means an individual authorized under KRS 213.076(5) to certify the cause of death.

Section 2. Registration. (1) A medical certifier or funeral director who is required pursuant to KRS 213.076 to supply information concerning a death to the state registrar shall provide the information using the KY-EDRS.

(2) A medical certifier or funeral director shall register and obtain access to the KY-EDRS by telephoning the Kentucky Office of Vital Statistics and supplying the following information:

(a) Name;

(b) Address;

(c) Telephone number;

(d) Facsimile number; and

(e) Electronic mail address.

(3) A registered user shall notify the Office of Vital Statistics of a change to any of the information provided in subsection (2) of this section within fifteen (15) calendar days of the change.

STEPHANIE MAYFIELD GIBSON, MD, FCAP, Commissioner
AUDREY TAYSE HAYNES, Secretary

APPROVED BY AGENCY: October 8, 2014

FILED WITH LRC: October 9, 2014 at 1 p.m.

CONTACT PERSON: Tricia Orme, Office of Legal Services,

275 East Main Street 5 W-B, Frankfort, Kentucky 40621, phone 502-564-7905, fax 502-564-7573, Tricia.Orme@ky.gov.

CABINET FOR HEALTH AND FAMILY SERVICES
Department for Public Health
Division of Prevention and Quality Improvement
(As Amended at ARRS, December 9, 2014)

902 KAR 21:010. Eligibility for the Kentucky Physicians Care (KPC) program.

RELATES TO: KRS 211.400, 211.402
STATUTORY AUTHORITY: KRS 194A.050(1), 211.400, 211.402
NECESSITY, FUNCTION, AND CONFORMITY: KRS 194A.050(1) requires the Secretary for the Cabinet for Health and Family Services to promulgate administrative regulations necessary to operate programs and fulfill the responsibilities vested in the cabinet. KRS 211.402(5) requires the cabinet to promulgate administrative regulations to establish eligibility criteria and implement the provisions of KRS 211.400 and 211.402 for the Kentucky Physicians Care Program. This administrative regulation establishes the eligibility requirements for the Kentucky Physicians Care (KPC) program.

Section 1. Definitions. (1) "Applicant" means an individual or family applying for the Kentucky Physicians Care Program.
(2) "Cabinet" is defined by KRS 194A.005(1) and KRS 216B.015(6).
(3) "Cabinet approved site" means an organization that has been approved by the cabinet to be a satellite site to provide eligibility determination for KPC applicants: including:
(a) Free or charitable clinics;
(b) Local health departments;
(c) Federally qualified health centers;
(d) Hospitals;
(e) University health systems; and
(f) Social service agencies.
(4)[~~(3)~~] "Health professional" means a person that has a license that is not suspended or revoked under disciplinary proceedings in any jurisdiction as a:
(a) Physician, which is defined by KRS 311.720(9);
(b) Physician assistant, which is defined by KRS 311.840(3);
(c) Advanced practice registered nurse, which is defined by KRS 314.011(7); or
(d) Dentist, which is defined by KRS 313.010(10).
(5)[~~(4)~~] "KPC" means Kentucky Physicians Care.
(6)[~~(5)~~] "Resource limit" means a cash resource including those in a savings or checking account and the following liquid assets:
(a) Stocks;
(b) Bonds;
(c) Certificates of deposit;
(d) Property value assessments for rental properties; and
(e) Similar other liquid assets.

Section 2. Application. An applicant may apply to enroll in the KPC program at a local:
(1) Department for Community Based Services office; or
(2) Cabinet approved site.

Section 3. Eligibility Requirements for Oral Health Services. In order to be eligible for KPC oral health services, an individual shall:
(1) Be a Kentucky resident;
(2) Have a gross income at or below 100 percent of the federal poverty level;
(3) Be ages eighteen (18) to sixty-four (64);
(4) Have a resource limit of $2,000 or less;
(5) Not qualify for government medical assistance programs;
(6) Not be covered by a health benefit plan as defined under Subtitle 17A of KRS Chapter 304;
(7) Submit the KPC PA-47 form; and
(8) Submit the Authorization to Use and Disclose Protected Health Information for Auditing Purposes.

Section 4. Eligibility Requirements for Prescription Assistance. In order to be eligible for KPC prescription assistance services, an individual shall:
(1) Be a Kentucky Resident;
(2) Have a gross income limit as determined by each participating pharmaceutical manufacturer for prescription assistance;
(3) Not qualify for Medicare, Medicaid, or other governmental medical assistance programs, including Medicare Part D;
(4) Be ages eighteen (18) to sixty-four (64);
(5) Not have prescription drug benefits that cover the requested prescription medication;
(6) Submit the KPC PA-47 form; and
(7) Submit the Authorization to Use and Disclose Protected Health Information for Auditing Purposes.

Section 5. Eligibility Determination. (1) The cabinet shall require an applicant enrolling in the KPC program to provide proof of eligibility.
(2) Proof of eligibility shall include:
(a) Proof of Income, which shall be determined by one (1) of the following:
1. A check stub indicating the applicant's most recent income;
2. A W-2 form or income tax records from the previous year;
3. A letter from an applicant's employer on company letterhead indicating the applicant's monthly salary;
4. An IRS 1040C form for self-employment;
5. A Social Security Administration Benefits Statement SSA-1099 form;
6. A notarized letter from a non-relative stating that the applicant has no income;
7. A DCBS form PAFS-700, Verification of Employment and Wages;
8. A DCBS form PAFS-702, Income Verification;
9. A current DCBS Food Stamp approval letter that indicates the applicant's income; or
10. A copy of the applicant's unemployment benefits pay-stub;
(b) Proof of Kentucky residency, which shall be determined by a:
1. Valid Kentucky Driver's License with a current Kentucky address;
2. Valid Kentucky state issued ID card with a current Kentucky address;
3. One (1) of the following current utility bills with the name and address submitted on the KPC-PA 47:
a. Electric bill;
b. Water bill;
c. Gas bill;
d. Cable bill; or
e. Utility bill;
4. Current rental or mortgage contract with the name and address submitted on the KPC PA-47; or
5. Facility issued picture identification card from a center that provides services to homeless populations;
(c) Proof of income resources, if applicable, including:
1. Savings and checking account statements;
2. Property value assessments for rental property, which shall include income from a part of the applicant's home;
3. Stocks;
4. Bonds;
5. Certificates of Deposit; and
4. Other income resources; and
(d) If applicable, documentation demonstrating that the medication requested for assistance is not covered by the applicant's insurance plan. The prescription coverage shall not permit either the name brand or generic of the medication requested for assistance through the KPC program.

Section 6. Referrals. (1) An individual determined to be eligible for the KPC program may call the Health Care Access toll-free

hotline, 1-800-633-8100, for information and referral services.

(2) KPC may refer the individual to a participating volunteer:

(a) Health professional; or

(b) Pharmacy.

(3) If a participating health provider is not available in the individual's locality or the services requested are not available under the KPC program, KPC may refer an individual to a:

(a) Health care organization;

(b) Free clinic; or

(c) Community health center.

Section 7. Incorporation by Reference. (1) The following material is incorporated by reference:

(a) "KPC PA-47", 3/2014; and

(b) "Authorization to Use and Disclose Protected Health Information for Auditing Purposes", 4/2013.

(2) This material may be inspected, copied, or obtained, subject to applicable copyright law, at the Department for Public Health, 275 East Main Street, Frankfort, Kentucky 40621, Monday through Friday, 8 a.m. to 4:30 p.m.

STEPHANIE MAYFIELD GIBSON, MD, FCAP, Commissioner
AUDREY TAYSE HAYNES, Secretary

APPROVED BY AGENCY: September 11, 2014

FILED WITH LRC: September 15, 2104 at 1 p.m.

CONTACT PERSON: Tricia Orme, Office of Legal Services, 275 East Main Street, 5 W-B, Frankfort, Kentucky 40621, phone 502-564-7905, fax 502-564-7573, email tricia.orme@ky.gov.

CABINET FOR HEALTH AND FAMILY SERVICES
Department for Public Health
Division of Public Health Protection and Safety
(As Amended at ARRS, December 9, 2014)

902 KAR 100:010. Definitions for 902 KAR Chapter 100.

RELATES TO: KRS 211.840, 211.842-211.852, 211.990(4), 10 C.F.R. 20.1003-20.1005, NCRP Report 141, 42 U.S.C. 2011 et seq.

STATUTORY AUTHORITY: KRS 194A.050, 211.090(3), 211.844, 10 C.F.R. 20.1003-20.1005

NECESSITY, FUNCTION, AND CONFORMITY: KRS 211.844 authorizes the Cabinet for Health and Family Services to provide by administrative regulation for the registration and licensing of the possession or use of sources of ionizing or electronic product radiation and the handling and disposal of radioactive waste. The Nuclear Regulatory Commission (NRC) approves or denies Kentucky's program for regulating radioactive materials after the effective date of administrative regulations within 902 KAR Chapter 100. The federal guidance manual, Compatibility Categories and Health and Safety Identification for NRC Regulations and Other Program Elements - SA - 200, issued June 5, 2009, provides parameters states shall follow in order for approval. The parameters include the provision that definitions shall be identical to NRC definitions. This administrative regulation establishes definitions for 902 KAR Chapter 100.

Section 1. Definitions. (1) "A_1" and "A_2":

(a) "A_1" means the maximum activity of special form radioactive material permitted in a Type A package;

(b) "A_2" means the maximum activity of radioactive material, other than special form radioactive material, LSA, and SCO material, permitted in a Type A package;

(c) These values are listed in 10 C.F.R. 71, Appendix A, or may be derived under the procedure prescribed in 10 C.F.R. 71 Appendix A.

(2) "Absorbed dose" means the energy imparted by ionizing radiation per unit mass of irradiated material. The units of absorbed dose are the rad and the gray (Gy).

(3) "Accelerator" means a machine capable of accelerating electrons, protons, deuterons, or other charged particles in a vacuum and of discharging the resultant particulate or other radiation into a medium at energies usually in excess of one (1) MeV, such as the cyclotron, synchrotron, synchrocyclotron, betatron, linear accelerator, and Van de Graaff electrostatic generator.

(4) "Accessible surface" means the external surface of the enclosure or housing provided by the manufacturer.

(5) "Act" means the "Kentucky Radiation Control Act of 1978", as established in KRS 211.840.

(6) "Activity" means the rate of disintegration (transformation) or decay of radioactive material. The units of activity are the curie (Ci) and the becquerel (Bq).

(7) "Address of use" means the building or buildings that are identified on the license and where radioactive material may be received, used or stored.

(8) "Adult" means an individual eighteen (18) or more years of age.

(9) "Agreement state" means a state with which the United States Nuclear Regulatory
Commission or the United States Atomic Energy Commission has entered into an effective agreement under subsection 274 b. of the Atomic Energy Act of 1954, 42 U.S.C. 200 et seq., as amended (73 Stat. 689).

(10) "Airborne radioactive material" means radioactive material dispersed in the
air in the form of dusts, fumes, particulates, mists, vapors, or gases.

(11) "Airborne radioactivity area" means a room, enclosure, or area in which airborne radioactive material, composed wholly or partly of radioactive material, exists in concentrations:

(a) In excess of the derived air concentrations specified in 10 C.F.R. 20 Appendix B; or

(b) That an individual present in the area without respiratory protective equipment may exceed an intake of six-tenths (0.6) percent of the annual limit on intake or twelve (12) DAC hours.

(12) "Air kerma (K)" means the kinetic energy released in air by ionizing radiation. Kerma is determined as the quotient of dE by dM, where dE is the sum of the initial kinetic energies of all the charged ionizing particles liberated by uncharged ionizing particles in air of mass dM. The SI unit of air kerma is joule per kilogram and the special name for the unit of kerma is the gray (Gy).

(13) "Air-purifying respirator" means a respirator with an air-purifying filer, cartridge, or canister that removes specific air contaminants by passing ambient air through the air-purifying element.

(14) "Alert" means the notice given when an event may occur, is in progress, or has occurred that may lead to a release of radioactive material, but the release is not expected to require a response by an off-site response organization in order to protect persons offsite.

(15) "Aluminum equivalent" means the thickness of type 1100 aluminum, which is composed of at least ninety-nine (99.0) percent aluminum, 0.12 percent copper, affording the same attenuation, under specified conditions, as the material for which it is substituted.

(16) "Analytical x-ray system" means a system which utilizes x-rays for the examination of the structure of materials, such as x-ray diffraction and spectrographic equipment.

(17) "Annual limit on intake" or "ALI" means the derived limit for the amount of radioactive material taken into the body of an adult worker by inhalation or ingestion in a year. ALI is the smaller value of annual intake of a given radionuclide by the reference man that would result in:

(a) A committed effective dose equivalent of five (5) rems, or 0.05 Sv; or

(b) A committed dose equivalent of fifty (50) rems, or five-tenths (0.5) Sv, to an individual organ or tissue. ALI values for intake by ingestion and by inhalation of selected radionuclides are established in 10 C.F.R. 20 Appendix B.

(18) "Area of use" means a portion of a physical structure that has been set aside for the purpose of receiving, using or storing radioactive material.

(19) "As low as reasonably achievable" or "ALARA" means making every reasonable effort to maintain exposures to radiation

as far below the dose limits established in 902 KAR 100:019 as practical, consistent with the purpose for which the licensed activity is undertaken. ALARA shall take into account the state of technology, the economics of improvement in relation to benefits to the public health and safety, and other societal and socioeconomic considerations, in relation to the utilization of nuclear energy and radioactive materials in the public interest.

(20) "Assigned protection factor" or "APF" means the expected workplace level of respirator protection that would be provided by a properly functioning respirator or a class of respirators to properly fitted and trained users. Operationally, the inhaled concentration may be estimated by dividing the ambient airborne concentration by the APF.

(21) "Atmosphere-supplying respirator" means a respirator that supplies the respirator user with breathing air from a source independent of the ambient atmosphere, and includes supplied-air respirators (SARs) and self-contained breathing apparatus (SCBA) units.

(22) "Attenuation" means the reduction of exposure rate upon passage of radiation through matter.

(23) "Attenuation block" means a block or stack, having dimensions twenty (20) centimeters by twenty (20) centimeters by three and eight-tenths (3.8) centimeters, of type 1100 aluminum alloy or other materials having equivalent attenuation.

(24) "Authorized medical physicist" means an individual who:

(a) Meets the requirements in 902 KAR 100:072, Sections (63) and 65(1); or

(b) Is identified as an authorized medical physicist or teletherapy physicist on:

1. A specific medical use licensee issued by the cabinet, U.S. Nuclear Regulatory Commission, or an agreement state;

2. A medical use permit issued by a U.S. Nuclear Regulatory Commission master material licensee;

3. A permit issued by the cabinet, U.S. Nuclear Regulatory Commission, or an agreement state broad scope medical use licensee; or

4. A permit issued by the U.S. Nuclear Regulatory Commission master material license broad scope medical use permittee.

(25) "Authorized nuclear pharmacist" means a pharmacist who:

(a) Meets the requirements in 902 KAR 100:072, Sections 63 and 66(1);

(b) Is identified as an authorized nuclear pharmacist on a:

1. Specific license issued by the cabinet, state, or U.S. Nuclear Regulatory Commission that authorizes the medical use or the practice of nuclear pharmacy;

2. Permit issued by a U.S. Nuclear Regulatory Commission master material licensee that authorizes medical use or the practice of nuclear pharmacy;

3. Permit issued by the cabinet, U.S. Nuclear Regulatory Commission, or agreement state broad scope medical use licensee that authorizes medical use or the practice of nuclear pharmacy; or

4. Permit issued by a U.S. Nuclear Regulatory Commission master material license broad scope medical use permittee that authorizes medical use or the practice of nuclear pharmacy;

(c) Is identified as an authorized nuclear pharmacist by a commercial nuclear pharmacy that has been authorized to identify authorized nuclear pharmacists; or

(d) Is designated as an authorized nuclear pharmacist under 902 KAR 100:058, Section 9(2)(c).

(26) "Authorized user" means a physician, dentist, or podiatrist who:

(a) Meets the requirements in 902 KAR 100:072, Sections 63 and 68(1), 69(1), 70(1), 71(1), 72(1), 74(1), 76(1), or[~~and~~] 77(1); or

(b) Is identified as an authorized user on:

1. The cabinet's, U.S. Nuclear Regulatory Commission's, or an agreement state's license that authorizes the medical use of radioactive material;

2. A permit issued by a U.S. Nuclear Regulatory Commission master material licensee that is authorized to permit the medical use of radioactive material;

3. A permit issued by the cabinet, U.S. Nuclear Regulatory Commission, or agreement state licensee of broad scope that is authorized to permit the medical use of radioactive material; or

4. A permit issued by a U.S. Nuclear Regulatory Commission master material license broad scope permittee that is authorized to permit the medical use of radioactive material.

(27) "Automatic exposure control" means a device that automatically controls one (1) or more technique factors in order to obtain, at a preselected location, a required quantity of radiation.

(28) "Background radiation" means radiation not under the control of the licensee, including:

(a) From cosmic sources;

(b) Naturally occurring radioactive materials;

(c) Radon that is not a decay product of source or special nuclear material; and

(d) Global fallout as it exists in the environment from the testing of nuclear explosive devices or from past nuclear accidents. Background radiation shall not include radiation from radioactive materials regulated by the Cabinet for Health and Family Services.

(29) "Beam axis" means the axis of rotation of the beam limiting device.

(30) "Beam limiting device" or "collimator" means a device that provides a means to restrict the dimensions of the x-ray field.

(31) "Beam monitoring system" means a system designed to detect and measure the radiation present in the useful beam.

(32) "Beam scattering foil" means a thin piece of material (usually metallic) placed in the beam to scatter a beam of electrons in order to provide a more uniform electron distribution in the useful beam.

(33) "Becquerel" means a unit, in the International System of Units (SI), of measurement of radioactivity equal to one (1) transformation per second.

(34) "Bioassay" or "radiobioassay" means the determination of kinds, quantities or concentrations, and, in some cases, the locations of radioactive material in the human body, by direct measurement (in vivo counting) or by analysis and evaluation of materials excreted or removed from the human body.

(35) "Brachytherapy" means a method of radiation therapy in which an encapsulated source or group of sources is utilized to deliver radiation at a distance to a few centimeters, by surface, intracavitary, or interstitial application.

(36) "Broker" or "waste broker" means a person who takes possession of low-level waste solely for the purposes of consolidation and shipment.

(37) "By-product material" means:

(a) Radioactive material, except special nuclear material, yielded in or made radioactive by exposure to the radiation incident to the process of producing or utilizing special nuclear material; or

(b) The tailings or wastes produced by the extraction or concentration of uranium or thorium from ore processed primarily for its source material content, including discrete surface wastes resulting from uranium solution extraction processes. Underground ore bodies depleted by these solution extraction operations shall not constitute by-product material within this definition.

(38) "Cabinet" means Cabinet for Health Services, or its duly authorized representatives.

(39) "Cabinet radiography" means industrial radiography conducted in an enclosure or cabinet shielded so that radiation levels at every location on the exterior meet the limitations specified in 902 KAR 100:019, Section 11.

(40) "Cabinet x-ray system" means an x-ray system with the x-ray tube installed or used in a permanent enclosure in which the enclosure is intended to contain at least that portion of the material being irradiated, not to include x-ray systems used by licensed practitioners of the healing arts. The enclosure:

(a) May be the architectural structure or may be independent of the architectural structure;

(b) Shall provide attenuation of the radiation to meet the requirements of 902 KAR 100:105; and

(c) Shall exclude personnel from its interior during the generation of x-radiation.

(41) "Calendar quarter" means between twelve (12) and fourteen (14) consecutive weeks.

(a) The first calendar quarter of each year shall begin in January and subsequent calendar quarters shall be arranged so

that no day is included in more than one (1) calendar quarter and no day in a one (1) year period is omitted from inclusion within a calendar quarter.

(b) A licensee or registrant shall not change the method observed of determining calendar quarters, except at the beginning of a calendar year.

(42) "Calibration" means the determination of:

(a) The response or reading of an instrument relative to a series of known radiation values over the range of the instrument; or

(b) The strength of a source of radiation relative to a standard.

(43) "Carrier" is defined by KRS 174.405(1).

(44) "Cephalometric device" means a device intended for the radiographic visualization and measurement of the dimensions of the human head.

(45) "Certificate holder" means a person who has been issued a certificate of compliance or other package approval by the U.S. Nuclear Regulatory Commission.

(46) "Certificate of Compliance" or "CoC" means the certificate issued by the U.S. Nuclear Regulatory Commission under 10 C.F.R. Part 71, which approves the design of a package for the transportation of radioactive material.

(47) "Certified cabinet x-ray system" means an x-ray system that has been certified pursuant to[~~under~~] 21 C.F.R. 1010.2 as being manufactured and assembled according to the provisions of 21 C.F.R. 1020.40.

(48) "Certified component" means a component of an x-ray system subject to 21 C.F.R. Subchapter J.

(49) "Certified system" means an x-ray system that has one (1) or more certified component.

(50) "C.F.R." means Code of Federal Regulations.

(51) "Changeable filters" means a filter, exclusive of inherent filtration, which can be removed from the useful beam through an electronic, mechanical, or physical process.

(52) "Chemical description" means a description of the principal chemical characteristics of a low-level radioactive waste.

(53) "Class" or "lung class" or "inhalation class" means a classification scheme for inhaled material according to its rate of clearance from the pulmonary region of the lung. Materials shall be classified as D, W, or Y, which applies to a range of clearance half-times:

(a) For Class D (Days) of less than ten (10) days;

(b) For Class W (Weeks) from ten (10) to 100 days; and

(c) For Class Y (Years) of greater than 100 days.

(54) "Close reflection by water" means immediate contact by water of sufficient thickness for maximum reflection of neutrons.

(55) "Collective dose" means the sum of the individual doses received in a given period of time by a specified population from exposure to a specified source of radiation.

(56) "Collimator" means a device used to limit the size, shape, and direction of the primary radiation beam.

(57) "Commission" means the U.S. Nuclear Regulatory Commission or its duly authorized representatives.

(58) "Committed dose equivalent ($H_{T,50}$)" means the dose equivalent to organs or tissues of reference (T) that will be received from an intake of radioactive material by an individual during the fifty (50) year period following the intake.

(59) "Committed effective dose equivalent ($H_{E,50}$)" means the sum of the products of the weighting factors applicable to each of the body organs or tissues that are irradiated and the committed dose equivalent to these organs or tissues ($H_{E,50} = \square W_T H_{T,50}$).

(60) "Computer-readable medium" means the cabinet's computer can transfer the information from the medium into its memory.

(61) "Computed tomography" or "CT" means the production of a tomogram by the acquisition and computer processing of x-ray transmission data.

(62) "Consignee" means the designated receiver of the shipment of low-level radioactive waste.

(63) "Consignment" means each shipment of a package or groups of packages or load of radioactive material officered by a shipper for transport.

(64) "Constraint" or "dose constraint" means a value above which specified licensee actions are required.

(65) "Contact therapy system" means an x-ray system used for therapy with the x-ray tube port placed in contact with or within five (5) centimeters of the surface being treated.

(66) "Containment system" means the assembly of components of the package intended to retain the radioactive material during transport.

(67) "Controlled area" means an area, outside of a restricted area but inside the site boundary, to which access can be limited by the licensee or registrant for a stated reason.

(68) "Cooling curve" means the graphical relationship between heat units stored and cooling time.

(69) "Conveyance" means:

(a) For transport by public highway or rail, a transport vehicle or large freight container;

(b) For transport by water, a vessel or a hold, compartment, or defined deck area of a vessel including a transport vehicle on board the vessel; or

(c) Transportation by an aircraft.

(70) "Critical group" means the group of individuals reasonably expected to receive the greatest exposure to residual radioactivity for any applicable set of circumstances.

(71) "Criticality Safety Index" or "CSI", means the dimensionless number, rounded up to the next tenth, assigned to and placed on the label of a fissile material package, to designate the degree of control of accumulation of packages containing fissile material during transportation. Determination of the criticality safety index is described in 10 C.F.R. 71.22, 71.23, and 71.59.

(72) "Curie" means a quantity of radioactivity.

(a) One (1) curie (Ci) is that quantity of radioactive material that decays at the rate of 3.7×10^{10} disintegrations per second (dps).

(b) Commonly used submultiples of the curie are the millicurie and the microcurie.

1. One (1) millicurie (mCi) = 0.001 curie = 3.7×10^{7} dps.

2. One (1) microcurie (uCi) = 0.000001 curie = 3.7×10^{4} dps.

(73) "Dead man switch" means a switch so constructed that a circuit closing contact can be maintained only by continuous pressure on the switch by the operator.

(74) "Declared pregnant woman" means a woman who has voluntarily informed the licensee[~~her employer~~], in writing, of her pregnancy and the estimated date of conception. The declaration remains in effect until the declared pregnant woman withdraws the declaration in writing or is no[~~not~~] longer pregnant.

(75) "Decommission" means the:

(a) Safe removal from service of a facility or site;

(b) Termination of license; and

(c) Reduction of residual radioactivity to a level permitting release of the property:

1. For unrestricted use; or

2. Under restricted conditions.

(76) "Decontamination facility" means a facility operating under the cabinet, U.S. Nuclear Regulatory Commission, or an agreement state license whose principal purpose is decontamination of equipment or materials to accomplish recycle, reuse, or other waste management objectives, and is not considered to be a consignee for LLW shipments.

(77) "Dedicated check source" means a radioactive source that is used to assure the constant operation of a radiation detection or measurement device over several months or years. The source may also be used for other purposes.

(78) "Deep-dose equivalent (H_d)" which applies to external whole-body exposure, means the dose equivalent at a tissue depth of one (1) centimeter (cm) (1000 mg/cm^2).

(79) "Demand respirator" means an atmosphere-supplying respirator that admits breathing air to the facepiece only when a negative pressure is created inside the facepiece by inhalation.

(80) "Derived air concentration" or "DAC" means the concentration of a given radionuclide in air which, if breathed by the reference man for a working year of 2,000 hours under conditions of light work, results in an intake of one (1) ALI.

(a) "Light work" produces an inhalation rate of one and two-tenths (1.2) cubic meters ($1.2 m^3$) of air per hour.

(b) DAC values are given in 10 C.F.R., 20 Appendix B.

(81) "Derived air concentration-hour" or "DAC-hour" means the product of the concentration of radioactive material in air, expressed as a fraction or multiple of the derived air concentration for each radionuclide, and the time of exposure to that radionuclide, in hours. A licensee may take 2,000 DAC-hours to represent one (1) ALI, equivalent to a committed effective dose equivalent of five (5) rems (0.05 Sv).

(82) "Deuterium" means deuterium and any deuterium compounds, including heavy water, in which the ratio of deuterium atoms to hydrogen atoms exceeds 1:5000.

(83) "Diagnostic clinical procedure manual" means the collection of written procedures, methods, instructions, and precautions by which the licensee performs diagnostic clinical procedures, where each diagnostic clinical procedure:

(a) Has been approved by the authorized user; and

(b) Includes the radiopharmaceutical name, dosage, and route of administration.

(84)[~~(83)~~] "Diagnostic source assembly" means the tube housing assembly with a beam-limiting device attached.

(85)[~~(84)~~] "Diagnostic-type protective tube housing" means an x-ray tube housing so constructed that the leakage radiation measured at a distance of one (1) meter from the source cannot exceed 100 milliroentgens in one (1) hour if the tube is operated at its maximum continuous rated current for the maximum tube potential.

(86)[~~(85)~~] "Diagnostic x-ray system" means an x-ray system designed for irradiation of a part of the human body for the purpose of diagnosis or visualization.

(87)[~~(86)~~] "Direct scatter radiation" means that scattered radiation that has been deviated in direction only by materials irradiated by the useful beam. (See also "scattered radiation").

(88)[~~(87)~~] "Disposable container" means a container principally used to confine low-level radioactive waste during disposal operations at a land disposal facility. (See also "high integrity container".) For some shipments, the disposal container may be transport package.

(89)[~~(88)~~] "Disposable respirator" means a respirator for which maintenance is not intended and that is designed to be discarded after excessive breathing resistance, sorbent exhaustion, physical damage, or end-of-service-life renders it unsuitable for use. Disposal respirator may include, but not limit to a disposable half-mask respirator or a disposable escape-only self-contained breathing apparatus (SCBA).

(90)[~~(89)~~] "Disposal" means the disposition of waste as authorized by 902 KAR 100:021.

(91)[~~(90)~~] "Distinguishable from background" means that the detectable concentration of a radionuclide is statistically different from the background concentrations of that radionuclide in the vicinity of the site or, in the case of structures, in similar materials using adequate measurements technology, survey, and statistical techniques.

(92)[~~(91)~~] "Dose" or "radiation dose" means:

(a) Absorbed dose;

(b) Dose equivalent;

(c) Effective dose equivalent;

(d) Committed dose equivalent;

(e) Committed effective dose equivalent; or

(f) Total effective dose equivalent.

(93)[~~(92)~~] "Dose commitment" means the total radiation dose to a part of the body that results from retention in the body of radioactive material. Estimation assumes the period of exposure to retained material to be less than fifty (50) years.

(94)[~~(93)~~] "Dose equivalent (H_T)" means the product of the absorbed dose in tissue, the quality factor, and other necessary modifying factors at the location of interest. The units of dose equivalent are the rem and sievert (Sv).

(95)[~~(94)~~] Dose monitor unit (DMU)" means a unit response from the beam monitoring system from which the absorbed dose can be calculated.

(96)[~~(95)~~] "Dosimetry processor" means an individual or an organization that processes and evaluates individual monitoring equipment in order to determine the radiation dose delivered to the equipment.

(97)[~~(96)~~] "DOT " means the U.S. Department of Transportation.

(98)[~~(97)~~] "Effective dose equivalent (H_E)" means the sum of the products of the dose equivalent to the organ or tissue (H_T) and the weighting factors (W_T) applicable to each of the body organs or tissues that are irradiated ($H_E = W_T H_T$).

(99)[~~(98)~~] "Embryo or fetus" means the developing human organism from conception until the time of birth.

(100)[~~(99)~~] "Energy compensation source or "ECS" means a small sealed source, with an activity not exceeding 100 microcuries (3.7 MBq), used within a logging tool, or other tool components, to provide a reference standard to maintain the tool's calibration when in use.

(101)[~~(100)~~] "Entrance or access point" means a location through which an individual may gain access to a radiation area or radioactive material, including an entry or exit portal of sufficient size to permit human entry, irrespective of its intended use.

(102)[~~(101)~~] "Entrance exposure rate" means the roentgens per unit time at the point the center of the useful beam enters the patient.

(103)[~~(102)~~] "Environmental Protection Agency "EPA" Identification number" means the number received by a transporter following application to the EPA as required by 40 C.F.R. Part 263.

(104)[~~(103)~~] "Exclusive use" means the sole use of a conveyance by a single consignor in which initial, intermediate, and final loading and unloading are carried out under the direction of the consignor or consignee.

(a) Consignor and carrier shall each ensure that loading and unloading is performed by personnel having radiological training and resources appropriate for safe handling of the consignment.

(b) Consignor shall include with the shipping paper information provided to the carrier, specific written instructions for maintenance of exclusive use shipment controls.

(105)[~~(104)~~] "Exposure" means being exposed to ionizing radiation or to radioactive material.

(106)[~~(105)~~] "Exposure rate" means the exposure per unit of time.

(107)[~~(106)~~] "External beam radiation therapy" means therapeutic irradiation in which the source of radiation is at a distance from the body.

(108)[~~(107)~~] "External dose" means that portion of the dose equivalent received from radiation sources outside the body.

(109)[~~(108)~~] "Extremity" means hand, elbow, arm below the elbow, foot, knee, or leg below the knee.

(110)[~~(109)~~] "Eye dose equivalent". See "lens dose equivalent".

(111)[~~(110)~~] "Facility" means a location at which one (1) or more devices or sources are installed or located within one (1) building, vehicle, or under one (1) roof, under the same administrative control.

(112)[~~(111)~~] "Field emission equipment" means equipment which uses an x-ray tube in which electron emission from the cathode is due solely to the action of an electric field.

(113)[~~(112)~~] "Field-flattening filter" means a filter used to homogenize the absorbed dose rate over the radiation field.

(114)[~~(113)~~] "Field station" means a facility where radioactive sources may be stored or used and from which equipment is dispatched to temporary job sites.

(115)[~~(114)~~] "Filter" means the material in the useful beam which usually absorbs preferentially the less penetrating radiations.

(a) "Inherent filtration" means the filter permanently in the useful beam. It includes the window of the x-ray tube and the permanent tube enclosure.

(b) "Added filter" means the filter added to the inherent filtration.

(c) "Total filter" means the sum of the inherent and added filters.

(116)[~~(115)~~] "Filtering facepiece (dust mask)" means a negative pressure particulate respirator with a filter as an integral part of the facepiece or with the entire facepiece composed of the filtering medium, not equipped with elastomeric sealing surfaces and adjustable straps.

(117)[~~(116)~~](a) "Fissile material" means the:

1. Radionuclides uranium-233, uranium-235, plutonium-239,

and plutonium-241, or any combination of these radionuclides; and

2. Fissile nuclides themselves, not material containing fissile nuclides.

(b) Fissile material does not include unirradiated natural and depleted uranium; and natural or depleted uranium that has been irradiated in thermal reactors only;

(c) Fissile material also excludes certain controls as provided in 10 C.F.R. 71.15[~~70.15~~].

(118)[(~~117~~)] "Fissile material package" means a fissile material packaging together
with its fissile material contents.

(119)[(~~118~~)] "Fit factor" means a quantitative estimate of the fit of a particular respirator to a specific individual, and typically estimates the ratio of the concentration of a substance in ambient air to its concentration inside the respirator while worn.

(120)[(~~119~~)] "Fit test" means the use of a protocol to qualitatively or quantitatively evaluate the fit of a respirator on an individual.

(121)[(~~120~~)] "Fluoroscopic imaging assembly" means a component that comprises a reception system in which x-ray photons produce a fluoroscopic image. It includes equipment housings, electrical interlocks if present, the primary protective barrier, and structural material providing linkage between the image receptor and the diagnostic source assembly.

(122)[(~~121~~)] "Focal spot" means the area projected on the anode of the x-ray tube by the electrons accelerated from the cathode and from which the useful beam originates.

(123)[(~~122~~)] "Former U.S. Atomic Energy Commission (AEC) or U.S. Nuclear Regulatory Commission (NRC) licensed facilities" means nuclear reactors, nuclear fuel reprocessing plants, uranium enrichment plants, or critical mass experimental facilities where AEC or NRC licenses have been terminated.

(124)[(~~123~~)] "Gantry" means that part of a radiation producing machine supporting and allowing movements of the radiation head about a center of rotation.

(125)[(~~124~~)] "General purpose radiographic x-ray system" means a radiographic x-ray system which, by design, is not limited to radiographic examination of specific anatomical regions.

(126)[(~~125~~)] "Generally applicable environmental radiation standards" means standards issued by the Environmental Protection Agency (EPA) under the authority of 42 U.S.C. sec. 2011 et seq., that impose limits on radiation exposures or levels, or concentrations or quantities of radioactive material, in the general environment outside the boundaries of locations under the control of persons possessing or using radioactive material.

(127)[(~~126~~)] "Generator" or means a licensee operating under the cabinet, U.S. Nuclear Regulatory Commission or an agreement state who:

(a) Is a waste generator as defined in this administrative regulation; or

(b) Is the licensee to whom waste can be attributed within the context of the Low Level Radioactive Waste Policy Amendments Act of 1985, such as, waste generated as a result of decontamination or recycle activities.

(128)[(~~127~~)] "Gonad shield" means a protective barrier for the testes or ovaries.

(129) "Graphite" means graphite with a boron equivalent content less than five (5) parts per million and density greater than one and five-tenths (1.5) grams per cubic centimeter.

(130)[(~~128~~)] "Gray" or "Gy" means the SI unit of absorbed dose. One (1) gray equals an absorbed dose of one (1) Joule/kilogram (100 rads).

(131)[(~~129~~)] "Half-value layer" or "HVL" means the thickness of specified material which attenuates the beam of radiation to one-half (1/2) of its original air kerma rate, exposure rate or absorbed dose rate. This excludes the contribution of scattered radiation, other than that which might be present initially in the beam concerned.

(132)[(~~130~~)] "Healing arts screening" means the testing of human beings using x-ray machines for the detection or evaluation of health indications if these tests are not specifically and individually ordered by a licensed practitioner of the healing arts legally authorized to prescribe these x-ray tests for the purpose of diagnosis or treatment.

(133)[(~~131~~)] "Heat unit" means a unit of energy equal to the product of the peak kilovoltage, milliamperes, and seconds.

(134)[(~~132~~)] "Helmet" means a rigid respiratory inlet covering that also provides head protection against impact and penetration.

(135)[(~~133~~)] "High integrity container or "HIC" means a container commonly designated to meet the structural stability requirements of 10 C.F.R. 61.56, and to meet the U.S. Department of Transportation requirements for a Type A package.

(136)[(~~134~~)] "High radiation area" means an area, accessible to individuals, in which radiation levels from radiation sources external to the body may result in an individual receiving a dose equivalent in excess of one-tenth (0.1) rem (1m Sv) in one (1) hour at thirty (30) centimeters from the radiation source or thirty (30) centimeters from a surface that the radiation penetrates.

(137)[(~~135~~)] "Hood" means a respiratory inlet covering that completely covers the head and neck and may also cover portions of the shoulders and torso.

(138)[(~~136~~)] "Human use" means the internal or external administration of radiation or radioactive materials to human beings.

(139)[(~~137~~)] "Image intensifier" means a device that converts instantaneously, by means of photoemissive surfaces and electronic circuitry, an x-ray pattern into a light pattern of greater intensity than would have been produced by the original x-ray pattern.

(140)[(~~138~~)] "Image receptor" means a device that transforms incident radiation into a visual image or into another form which can be made into a visual image by further transformations.

(141)[(~~139~~)] "Image receptor support" means, for mammographic systems, that part of the system designed to support the image receptor in a horizontal plane during a mammographic examination.

(142)[(~~140~~)] "Individual" means a human being.

(143)[(~~141~~)] "Individual monitoring" means the assessment of:

(a) Dose equivalent by the use of an individual monitoring device;

(b) Committed effective dose equivalent by:

1. Bioassay; or

2. Determination of the time-weighted air concentrations to which an individual has been exposed; or

(c) Dose equivalent by the use of survey data.

(144)[(~~142~~)] "Individual monitoring device" or "individual monitoring equipment" means a device designed to be worn by a single individual for the assessment of dose equivalent, such as film badges, thermoluminescence dosimeters (TLDs), pocket ionization chambers, or personal ("lapel") air sampling devices.

(145)[(~~143~~)] "Industrial radiography" means the examination of the macroscopic structure of materials by nondestructive methods utilizing sources of radiation.

(146)[(~~144~~)] "Injection tool" means a device used for controlled subsurface injection of radioactive tracer material.

(147)[(~~145~~)] "Interlock" means a device preventing the start or continued operation of equipment unless certain predetermined conditions prevail.

(148)[(~~146~~)] "Internal dose" means that portion of the dose equivalent received from radioactive material taken into the body.

(149)[(~~147~~)] "Irradiation" means the exposure of matter to ionizing radiation.

(150)[(~~148~~)] "Kilovolt (kV) {kilo electron volt}" means the energy equal to that acquired by a particle with one (1) electron charge in passing through a potential difference of 1,000 volts in a vacuum. ***([{]***Note: current convention is to use kV for photons and keV for electrons.***)[}]***

(151)[(~~149~~)] "Kilovolt peak" or "kVp" means the crest value in kilovolts of the potential difference of a pulsating potential generator. If only one-half (1/2) of the wave is used, the value refers to the useful half of the wave.

(152)[(~~150~~)] "Lead equivalent" means the thickness of lead affording the same attenuation, under specified conditions, as the material in question.

(153)[(~~151~~)] "Leakage radiation" means radiation emanating from the diagnostic or therapeutic source assembly, except for the

useful beam.

(154)[(~~152~~)] "Leakage technique factor" means, with respect to different tube housing assemblies:

(a) For capacitor energy storage equipment: the maximum rated number of exposures in an hour for operation at the maximum rated peak tube potential, with a charge per exposure of ten (10) milliampere seconds (mAs) or the minimum obtainable from the unit, whichever is larger.

(b) For field emission equipment rated for pulsed operation: the maximum rated number of x-ray pulses in an hour for operation at the maximum rated peak tube potential.

(c) For all other equipment: the maximum rated continuous tube current for the maximum rated peak tube potential.

(155)[(~~153~~)] "Lens dose equivalent" or "LDE" means the external exposure of the lens of the eye, and is taken as the dose equivalent at a tissue depth of 0.3 centimeter (300 mg/cm^2).

(156)[(~~154~~)] "License" means a license issued by the cabinet under 902 KAR Chapter 100.

(157)[(~~155~~)] "Licensed material" means radioactive material, source material, or special nuclear material received, possessed, used, or transferred, under a general or specific license issued by the cabinet, U.S. Nuclear Regulatory Commission or an agreement state.

(158)[(~~156~~)] "Light field" means the area illuminated by light, simulating the radiation field.

(159)[(~~157~~)] "Limits" or "dose limits"" means the permissible upper bounds of radiation doses.

(160)[(~~158~~)] "Lixiscope" means a portable light-intensified imaging device using a sealed source.

(161)[(~~159~~)] "Logging assistant" means an individual who, under the personal supervision of a logging supervisor:

(a) Handles sealed sources or tracers that are not in logging tools or shipping containers; or

(b) Uses survey instruments in well-logging activities.

(162)[(~~160~~)] "Logging supervisor" means the individual who provides personal supervision of the utilization of sources of radiation at the well site.

(163)[(~~161~~)] "Logging tool" means a device used subsurface to perform well-logging.

(164)[(~~162~~)] "Loose-fitting facepiece" means a respiratory inlet covering that is designed to form a partial seal with the face.

(165)[(~~163~~)] "Lost or missing licensed material" means licensed material whose location is unknown. It includes material that has been shipped but has not reached its destination and whose location cannot be readily traced in the transportation system.

(166)[(~~164~~)] "Low-level radioactive waste" means radioactive waste not classified as:

(a) High-level radioactive waste;

(b) Transuranic waste;

(c) Spent nuclear fuel; or

(d) By-product material as defined in Section 11e(2) of the Atomic Energy Act of 1954, 42 U.S.C. 2014.

(167)[(~~165~~)] "Low specific activity" or "LSA" means radioactive material with limited specific activity, which is nonfissile or is excepted pursuant to[~~under~~] 10 C.F.R. 71.15[~~70.15~~] and that satisfies the descriptions and limits established in paragraphs (a), (b), and (c) of this subsection. Shielding materials surrounding the LSA material shall not be considered in determining the estimated average specific activity of the package contents. LSA material shall be in one (1) of three (3) groups:

(a) LSA-I:

1. Uranium and thorium ores, uranium or thorium concentrates of these ores, and other ores containing naturally occurring radioactive nuclides that are not intended to be processed for the use of these radionuclides;

2. Solid unirradiated natural or depleted uranium or natural thorium or their solid or liquid compounds or mixtures;

3. Radioactive material for which the A_2 value is unlimited; or

4. Other radioactive material in which the activity is distributed throughout and the estimated average specific activity does not exceed thirty (30) times the value for exempt material activity concentration determined in 10 C.F.R. 71 Appendix A.

(b) LSA-II:

1. Water with tritium concentration up to 20.0 curies/liter (0.8 TBq/liter); or

2. Material in which the radioactive material is distributed throughout, and the average specific activity does not exceed 10^{-4} A_2/gram for solids and gases, and 10^{-5} A_2/gram for liquids.

(c) LSA-III: Solids (e.g., consolidated wastes, activated materials), excluding powders, that satisfy the requirements of 10 C.F.R. 71.77 in which:

1. The radioactive material is distributed throughout a solid or a collection of solid objects;

2. Is essentially uniformly distributed in a solid compact binding agent (such as concrete, bitumen, ceramic, etc.);

3. The radioactive material is relatively insoluble, or it is intrinsically contained in a relatively insoluble material, so that, even under loss of packaging, the loss of radioactive material per package by leaching, when placed in water for seven (7) days, would not exceed 0.1 A_2; and the average specific activity of the solid does not exceed 2 x 10^{-3} A_2/gram; and

4. The average specific activity of the solid does not exceed 2 x 10^{-3} A_2/gram.

(168)[(~~166~~)] "Low toxicity alpha emitter" means natural uranium, depleted uranium, natural thorium, uranium-235, uranium-238, thorium-232, thorium-228 or thorium-230 when contained in ores or physical or chemical concentrates or tailings; or alpha emitters with a half-life of less than ten (10) days.

(169)[(~~167~~)] "mA" means milliampere.

(170)[(~~168~~)] "Management" means the chief executive officer or that individual's designee.

(171)[(~~169~~)] "mAs" means milliampere second.

(172)[(~~170~~)] "Maximum normal operating pressure" means the maximum gauge
pressure that would develop in the containment system in a period of one (1) year under the heat condition specified in 10 C.F.R. Part 71.71(c)(1), in the absence of venting, external cooling by an ancillary system, or operational controls during transport.

(173)[(~~171~~)] "Medical institution" means an organization in which several medical disciplines are practiced.

(174)[(~~172~~)] "Medical use" means the intentional internal or external administration of radioactive material, or the radiation therefrom, to patients or human research subjects under the supervision of an authorized user.

(175)[(~~173~~)] "Member of the public" means an individual except when the individual is receiving an occupational dose.

(176)[(~~174~~)] "Microscopic analytical x-ray equipment" means a device which utilizes x-rays for examining the microscopic structure of materials. This includes x-ray diffraction and spectrographic equipment.

(177)[(~~175~~)] "Mineral logging" means logging performed for the purpose of mineral exploration other than oil or gas.

(178)[(~~176~~)] "Minor" means an individual less than eighteen (18) years of age.

(179)[(~~177~~)] "Misadministration" means the administration of:

(a) A radiopharmaceutical dosage greater than thirty (30) microcuries of sodium iodide I-125 or I-131:

1. Involving the wrong patient or human research subject or the wrong radiopharmaceutical; or

2. If both the administered dosage differs from the prescribed dosage by more than twenty (20) percent of the prescribed dosage and the difference between the administered dosage and prescribe dosage exceeds thirty (30) microcuries.

(b) A therapeutic radiopharmaceutical dosage, other than sodium iodide I-125 or I-131:

1. Involving the wrong patient, human research subject, radiopharmaceutical, or route of administration; or

2. If the administered dosage differs from the prescribed dosage by more than twenty (20) percent of the prescribed dosage.

(c) A gamma stereotactic radiosurgery radiation dose:

1. Involving the wrong patient, human research subject, or treatment site; or

2. If the calculated total administered dose differs from the total prescribed dose by more than ten (10) percent.

(d) A teletherapy radiation dose:

1. Involving the wrong patient, human research subject, mode of treatment, or treatment site;

2. If the treatment consists of three (3) or fewer fractions and the calculated total administered dose differs from the total prescribed dose by more than ten (10) percent;

3. If the calculated weekly administered dose is thirty (30) percent greater than the weekly prescribed dose; or

4. If the calculated total administered dose differs from the total prescribed dose by more than twenty (20) percent.

(e) A brachytherapy radiation dose:

1. Involving the wrong patient, human research subject, radioisotope, or treatment site except for permanent implant seeds that were implanted in the correct site but migrated outside the treatment site;

2. Involving a sealed source that is leaking;

3. If, for a temporary implant, one (1) or more sealed sources are not removed upon completion of the procedure; or

4. If the calculated administered dose differs from the prescribed dose by more than twenty (20) percent.

(f) A diagnostic radiopharmaceutical dosage, other than quantities greater than thirty (30) microcuries of sodium iodide I-125 or I-131:

1. Involving the wrong patient, human research subject, radiopharmaceutical, or route of administration, or if the administered dosage differs from the prescribed dosage; and

2. If the dose to the patient or human research subject exceeds five (5) rems effective dose equivalent or fifty (50) rems dose equivalent to an individual organ.

(180)[~~(178)~~] "Mobile nuclear medicine service" means the transportation and medical use of radioactive material.

(181)[~~(179)~~] "Monitor unit (MU)" (See "Dose monitor unit").

(182)[~~(180)~~] "Monitoring" or "radiation monitoring" or "radiation protection monitoring" means the measurement of radiation levels, concentrations, surface area concentrations or quantities of radioactive material and the use of the results of these measurements to evaluate potential exposures and doses.

(183)[~~(181)~~] "Moving beam radiation therapy" means radiation therapy with any planned displacement of radiation field or patient relative to each other, or with any planned change of absorbed dose distribution. It includes arc, skip, conformal, intensity modulation and rotational therapy.

(184)[~~(182)~~] "Natural thorium" means thorium with the naturally occurring distribution of thorium isotopes; that is, 100 weight percent thorium-232.

(185)[~~(183)~~] "Negative pressure respirator (tight fitting)" means a respirator in which the air pressure inside the facepiece is negative during inhalation with respect to the ambient air pressure outside the respirator.

(186)[~~(184)~~] "Nominal treatment distance" means:

(a) For electron irradiation, the distance from the scattering foil, virtual source, or exit window of the electron beam to the entrance surface of the irradiated object along the central axis of the useful beam.

(b) For x-ray irradiation, the virtual source or target to isocenter distance along the central axis of the useful beam. For non-isocentric equipment, this distance shall be that specified by the manufacturer.

(187)[~~(185)~~] "Nonstochastic effect" or "deterministic effect" means a health effect, the severity of which varies with the dose and for which a threshold is believed to exist.

(188)[~~(186)~~] "Normal form radioactive material" means radioactive material that has not been demonstrated to qualify as "special form radioactive material."

(189)[~~(187)~~] "NRC" means the U.S. Nuclear Regulatory Commission or its duly authorized representatives.

(190)[~~(188)~~](a) "NRC Forms 540, 540A, 541, 541A, 542, and 542A" means official NRC forms as referenced in 902 KAR 100:021.

(b) Licensees need not use originals of these forms as long as any substitute forms are equivalent to the original documentation in respect to content, clarity, size, and location of information.

(c) Upon agreement between the shipper and consignee, NRC Forms 541, 541A, 542, and 542A may be completed, transmitted, and stored in electronic media.

(d) The electronic media shall have the capability for producing legible, accurate, and complete records in the format of the uniform manifest.

(191)[~~(189)~~] "Occupational dose" means dose received by an individual in the course of employment in which the individual's assigned duties for the licensee or registrant involve exposure to sources of radiation, whether in the possession of the licensee, registrant, or other person. Occupational dose shall not include dose received:

(a) From background radiation;

(b) As a medical patient;

(c) From voluntary participation in a medical research program;

(d) As a member of the public; or

(e) From exposure to individuals administered radioactive material and released in accordance with 902 KAR 100:072, Section 27.

(192) "Operating procedures" means detailed written instructions, such as:

(a) Normal operation of equipment and movable shielding;

(b) Closing of interlock circuits;

(c) Manipulation of controls;

(d) Radiation monitoring procedures for personnel and areas;

(e) Testing of interlocks; and

(f) Recordkeeping requirements.

(193)[~~(190)~~] "Output" means the exposure rate, dose rate, or a quantity related in a known manner to these rates from a teletherapy unit for a specified set of exposure conditions.

(194)[~~(191) "Operating procedures" means detailed written instructions, such as:~~

~~(a) Normal operation of equipment and movable shielding;~~

~~(b) Closing of interlock circuits;~~

~~(c) Manipulation of controls;~~

~~(d) Radiation monitoring procedures for personnel and areas;~~

~~(e) Testing of interlocks; and~~

~~(f) Recordkeeping requirements.~~

~~(192)~~] "Package" means the packaging together with its radioactive contents as presented for transport:

(a) Fissile material package or Type AF package, Type BF package, Type B(U)F package, or Type B(M)F package are all fissile material packaging types together with its fissile material complete.

(b) Type A package means a Type A packaging together with its radioactive contents. A Type A package is defined and shall comply with the DOT regulations in 49 C.F.R. Part 173.

(c) Type B package means a Type B packaging together with its radioactive contents.

1.[~~(i)~~] On approval, a Type B package design is designated by the U.S. Nuclear Regulatory Commission as B(U) unless the package has a maximum normal operating pressure of more than 100 pounds/in^2 (700 kPa) gauge or a pressure relief device that would allow the release of radioactive material to the environment under the tests specified in 10 C.F.R. Part 71.73 (hypothetical accident conditions), in which case it will receive a designation B(M).

2.[~~(ii)~~] B(U) refers to the need for unilateral approval of international shipments.

3.[~~(iii)~~] B(M) refers to the need for multilaterial approval of international shipments.

4.[~~(iv)~~] There is no distinction made in how packages with these designations ***might[~~may~~]*** be used in domestic transportation.

5.[~~(v)~~] To determine their distinction for international transportation, refer to U.S. Department of Transportation Regulations in 49 C.F.R. Part 173.

6.[~~(vi)~~] A Type B package approved before September 6, 1983, was designated only as Type B. Limitations on its use are specified in 902 KAR 100:070, Section 7.

(195)[~~(193)~~] "Packaging" means the assembly of components necessary to ensure compliance with the requirements of 902 KAR 100:070.

(a) It may consist of one (1) or more receptacles, absorbent materials, spacing structures, thermal insulation, radiation

shielding, and devices for cooling or absorbing mechanical shocks.

(b) The vehicle, tie-down system, and auxiliary equipment may be designated as part of the packaging.

(196)[(~~194~~)] "Patient" means an individual subjected to healing arts examination, diagnosis, or treatment.

(197)[(~~195~~)] "Peak tube potential" means the maximum value of the potential difference across the x-ray tube during an exposure.

(198)[(~~196~~)] "Periodic quality assurance check" means a procedure which is performed to ensure that a previous calibration continues to be valid.

(199)[(~~197~~)] "Permanent radiographic installation" means an installation or structure designed or intended for radiography and in which radiography is regularly performed.

(200)[(~~198~~)] "Person" is defined by[~~at~~] KRS 216B.015(16).

(201)[(~~199~~)] "Personal supervision" means guidance and instruction by the supervisor who is physically present at the job site and watching the performance of the operation in proximity so that contact can be maintained and immediate assistance given as required.

(202)[(~~200~~)] "Personnel monitoring equipment" means a device designed to be worn or carried by an individual for the purpose of estimating the dose received by the individual.

(203)[(~~201~~)] "Phantom" means a volume of material behaving in a manner similar
to tissue with respect to the attenuation and scattering of radiation.

(204)[(~~202~~)] "Phototimer" means a method for controlling radiation exposures to image receptors by the amount of radiation which reaches a radiation monitoring device. The radiation monitoring device is part of an electronic circuit which controls the duration of time the tube is activated. See "automatic exposure control".

(205)[(~~203~~)] "Physical description" means the items called for on NRC Form 541 to describe low-level radioactive waste.

(206)[(~~204~~)] "Physician" is defined by KRS 311.720(9).

(207)[(~~205~~)] "Planned special exposure" means an infrequent exposure to radiation, separate from and in addition to the annual dose limits.

(208)[(~~206~~)] "Position indicating device" means a device on dental x-ray equipment used to indicate the beam position and to establish a definite source-surface (skin) distance. It may or may not incorporate or serve as a beam-limiting device.

(209)[(~~207~~)] "Positive pressure respirator" means a respirator in which the pressure inside the respirator inlet covering exceeds the ambient air pressure outside the respirator.

(210)[(~~208~~)] "Powered air-purifying respirator" or "PAPR" means an air-purifying respirator that uses a blower to force the ambient air through air-purifying elements to the inlet covering.

(211)[(~~209~~)] "Preceptor" means an individual who provides, directs, or verifies the training and experience required for an individual to become an authorized user, an authorized medical physicist, an authorized nuclear pharmacist, or a Radiation Safety Officer.

(212)[(~~210~~)] "Pressure demand respirator" means a positive pressure atmosphere-supplying respirator that admits breathing air to the facepiece when the positive pressure is reduced inside the facepiece by inhalation.

(213)[(~~211~~)] "Preregistrant" means a person who is preregistered with the cabinet for the intent of obtaining a radiation producing machine registerable under 902 KAR 100:110.

(214)[(~~212~~)] "Preregistration" means preregistration with the cabinet as specified in 902 KAR 100:110.

(215)[(~~213~~)] "Prescribed dosage" means the quantity of radiopharmaceutical activity as documented:

(a) In a written directive;

(b) In the diagnostic clinical procedures manual; or

(c) In an appropriate record in accordance with the directions of the authorized user for diagnostic procedures.

(216)[(~~214~~)] "Prescribed dose" means:

(a) For gamma stereotactic radiosurgery, the total dose as documented in the written directive;

(b) For teletherapy, the total dose and dose per fraction as documented in the written directive; [~~or~~]

(c) For manual brachytherapy, the total source strength and exposure time or the total dose, as documented in the written directive; or

(d) For remote brachytherapy afterloaders, the total dose and dose per fraction as documented in the written directive.

(217)[(~~215~~)] "Primary dose monitoring system" means a system that:

(a) Monitors the useful beam during irradiation; and

(b) Terminates irradiation if a preselected number of dose monitor units have been acquired.

(218)[(~~216~~)] "Principal activities" means activities authorized by the license that are essential to achieving the purpose for which the license was issued or amended. "Principal activities" do not include:

(a) Storage during which licensed material is not accessed for use or disposal; and

(b) Activities incidental to decontamination or decommissioning.

(219)[(~~217~~)] "Protective apron" means an apron made of radiation absorbing materials of at least 0.25 mm lead equivalency; that is, if the HVL of the apron is not less than 0.25 mm lead at normal operating voltages.

(220)[(~~218~~)] "Protective barrier" means a barrier of radiation absorbing material used to reduce radiation exposure.

(a) "Primary protective barrier" means a barrier sufficient to attenuate the useful beam to the required degree.

(b) "Secondary protective barrier" means a barrier sufficient to attenuate the stray radiation to the required degree.

(221)[(~~219~~)] "Protective glove" means a glove made of radiation absorbing materials of at least 0.25 mm lead equivalency; that is, if the HVL of the glove is not less than 0.25 mm lead at normal operating voltages.

(222)[(~~220~~)] "Public dose" means the dose received by a member of the public from sources of radiation from licensed or registered operations. It shall not include radiation received:

(a) As an occupational dose;

(b) From background radiation;

(c) As a medical patient;

(d) From voluntary participation in a medical research program; or

(e) From exposure to an individual administered radioactive material and released in accordance with 902 KAR 100:072, Section 27.

(223)[(~~221~~)] "Qualified expert" means an individual who has been recognized by the cabinet to possess the knowledge and training to:

(a) Measure ionizing radiation;

(b) Evaluate safety techniques; and

(c) Advise regarding radiation protection needs.

(224)[(~~222~~)] "Qualitative fit test or "QFT" means a pass or fail fit test to assess the adequacy of respirator fit that relies on the individual's response to the test agent.

(225)[(~~223~~)] "Quality factor" or "Q" means the modifying factor used to derive dose equivalent from absorbed dose.

(a) Quality factors and absorbed dose equivalencies:

Type of Radiation	Quality Factor (Q)	Absorbed Dose Equal to a Unit Dose Equivalent[a]
X-, gamma, or beta radiation	1	1
Alpha particles, multiple-charged particles, fission fragments, and heavy particles of unknown charge	20	0.05
Neutrons of unknown energy	10	0.1
High-energy protons	10	0.1

[a]Absorbed dose in rad equal to one (1) rem or the absorbed dose in gray equal to one (1) sievert.

(b) If it is more convenient to measure the neutron fluence rate than to determine the neutron dose equivalent rate in rems per hour or sieverts per hour, as provided in paragraph (a) of this

subsection, one (1) rem (0.01 sievert) of neutron radiation of unknown energies may, for purposes of the regulations in this part, be assumed to result from a total fluence of twenty-five (25) million neutrons per square centimeter incident upon the body. If sufficient information exists to estimate the approximate energy distribution of the neutrons, the licensee may use the fluence rate per unit dose equivalent or the appropriate Q value from paragraph (c) of this subsection to convert a measured tissue dose in rads to dose equivalent in rems.

(c) Mean quality factors, Q, and fluency per unit dose equivalent for monoenergetic neutrons:

	Neutron Energy (MeV)	Quality Factor[a] (Q)	Fluency per Unit Dose Equivalent[b] (neutrons cm^{-2} rem^{-1})
(thermal)	2.5×10^{-8}	2	980×10^{6}
	1×10^{-7}	2	980×10^{6}
	1×10^{-6}	2	810×10^{6}
	1×10^{-5}	2	810×10^{6}
	1×10^{-4}	2	840×10^{6}
	1×10^{-3}	2	980×10^{6}
	1×10^{-2}	2.5	1010×10^{6}
	1×10^{-1}	7.5	170×10^{6}
	5×10^{-1}	11	39×10^{6}
	1	11	27×10^{6}
	2.5	9	29×10^{6}
	5	8	23×10^{6}
	7	7	24×10^{6}
	10	6.5	24×10^{6}
	14	7.5	17×10^{6}
	20	8	16×10^{6}
	40	7	14×10^{6}
	60	5.5	16×10^{6}
	1×10^{2}	4	20×10^{6}
	2×10^{2}	3.5	19×10^{6}
	3×10^{2}	3.5	16×10^{6}
	4×10^{2}	3.5	14×10^{6}

[a] Value of quality factor (Q) at the point at which the dose equivalent is maximum in a thirty (30)-cm diameter cylinder tissue-equivalent phantom.

[b] Monoenergetic neutrons incident normally on a thirty (30)-cm diameter cylinder tissue-equivalent phantom.

(226)[~~(224)~~] "Quantitative fit test "QNFT" means an assessment of the adequacy of respirator fit by numerically measuring the amount of leakage into the respirator.

(227)[~~(225)~~] "Quarter" is defined by KRS 341.080(1)(b).

(228)[~~(226)~~] "Rad" means the special unit of absorbed dose. One (1) rad equals an absorbed dose of 0.01 joule per kilogram (0.01 gray) or 100 ergs per gram.

(229)[~~(227)~~] "Radiation" means ionizing radiation.

(a) It includes the following:

1. Gamma rays;
2. X-rays;
3. Alpha particles;
4. Beta particles;
5. High speed electrons;
6. Neutrons;
7. High-speed protons; and
8. Other atomic particles capable of producing ions.

(b) It excludes nonionizing radiations, such as:

1. Sound;
2. Microwaves;
3. Radiowaves; or
4. Visible, infrared, or ultraviolet light.

(c) The following are specific forms of radiation:

1. "Leakage radiation" means radiation coming from within the tube or source housing except the useful beam.

2. "Scattered radiation" means radiation that, during passage through matter, has been deviated in direction, and may have been modified by a decrease in energy.

3. "Useful radiation" or "primary beam" means radiation that passes through the window, aperture, cone, or other beam limiting device of the tube or source housing.

4. "Stray radiation" means the sum of leakage and scattered radiation.

(230)[~~(228)~~] "Radiation area" means an area, accessible to individuals, in which there exists radiation at levels that an individual may receive in excess of five (5) millirems (0.05 mSv) in one (1) hour at thirty (30) centimeters from the radiation source or from a surface that the radiation penetrates.

(231)[~~(229)~~] "Radiation detector" means a device which, in the presence of radiation, by either direct or indirect means, provides a signal or other indication suitable for use in measuring one (1) or more quantities of incident radiation.

(232)[~~(230)~~] "Radiation head" means the structure from which the useful beam emerges.

(233)[~~(231)~~] "Radiation machine" means a device capable of producing radiation, except a device that produces radiation only from radioactive material.

(234)[~~(232)~~] "Radiation safety officer" means an individual who:

(a) Meets the requirements in 902 KAR 100:072, Sections 63 and 64(1) or (3)(a); or[~~Has the knowledge and responsibility to apply appropriate radiation protection administrative regulations; and~~]

(b) Is identified as a radiation safety officer on:[~~For licenses issued under 902 KAR 100:072, meets the requirements in 902 KAR 100:072, Sections 63 and 64(1) and (3)(a).~~]

1. A specific medical use licensee issued by the cabinet, U.S. Nuclear Regulatory Commission, or an agreement state; or

2. A medical use permit issued by a U.S. Nuclear Regulatory Commission master material licensee.

(235)[~~(233)~~] "Radiation therapy simulation system" means a fluoroscopic or radiographic x-ray system intended for:

(a) Localizing the volume to be exposed during radiation therapy; and

(b) Confirming the position and size of the therapeutic irradiation field.

(236)[~~(234)~~] "Radioactive marker" means radioactive material placed subsurface or on a structure intended for subsurface use for the purpose of depth determination or direction orientation.

(237)[~~(235)~~] "Radioactive material" means a solid, liquid, or gas, which emits radiation spontaneously.

(238)[~~(236)~~] "Radioactivity" means the disintegration of unstable atomic nuclei by the emission of radiation.

(239)[~~(237)~~] "Radiograph" means an image receptor on which the image is created directly or indirectly by an x-ray pattern and results in a permanent record.

(240)[~~(238)~~] "Radiographer" means an individual who performs or who, in attendance at the site where sources of radiation are being used, personally supervises industrial radiographic operations and who is responsible to the licensee or registrant for assuring compliance with the requirements of administrative regulations and license conditions.

(241)[~~(239)~~] "Radiographer's assistant" means an individual who, under the personal supervision of a radiographer, uses sources of radiation, related handling tools, or survey instruments in industrial radiography.

(242)[~~(240)~~] "Radiographer instructor" means a radiographer who has been authorized by the cabinet to provide on-the-job training to radiographer trainees under 902 KAR 100:100, Section 14.

(243)[~~(241)~~] "Radiographer trainee" means an individual who, under the personal supervision of a radiographer instructor, uses sources of radiation, related handling tools, or radiation survey instruments during the course of instruction.

(244)[~~(242)~~] "Radiographic exposure device" means an instrument containing a sealed source fastened or contained within, in which the sealed source or its shielding may be moved, or otherwise changed, from a shielded to an unshielded position for purposes of making a radiographic exposure.

(245)[~~(243)~~] "Radiographic imaging system" means a system designed to record a permanent or semipermanent image on an image receptor by the action of ionizing radiation.

(246)[~~(244)~~] "Radiographic personnel" means a:

(a) Radiographer;

(b) Radiographer instructor; or

(c) Radiographer trainee.

(247)[~~(245)~~] "Rating" means the operating limits specified by the component manufacturer.

(248)[~~(246)~~] "Recordable event" means the administration of:

(a) A radiopharmaceutical or radiation without a written directive, if a written directive is required;

(b) A radiopharmaceutical or radiation if a written directive is required without daily recording of each administered radiopharmaceutical dosage or radiation dose in the appropriate record;

(c) A radiopharmaceutical dosage greater than thirty (30) microcuries of sodium iodide I-125 or I-131 if:

1. The administered dosage differs from the prescribed dosage by more than twenty (20) percent; and

2. The difference between the administered dosage and prescribed dosage exceeds fifteen (15) microcuries;

(d) A therapeutic radiopharmaceutical dosage, other than sodium iodide I-125 or I-131, if the administered dosage differs from the prescribed dosage by more than twenty (20) percent;

(e) A teletherapy radiation dose, if the calculated weekly administered dose is fifteen (15) percent greater than the weekly prescribed dose; or

(f) A brachytherapy radiation dose, if the calculated administered dose differs from the prescribed dose by more than twenty (20) percent.

(249)[~~(247)~~] "Recording" means producing a permanent form of an image resulting from x-ray photons.

(250)[~~(248)~~] "Reference man" means a hypothetical aggregation of human physical and physiological characteristics arrived at by international consensus. These characteristics may be used by researchers and public health workers to standardize results of experiments and to relate biological insult to a common base.

(251)[~~(249)~~] "Registrant" means a person who is registered with the cabinet and is legally obligated to register with the cabinet under 902 KAR 100:110.

(252)[~~(250)~~] "Registration" means registration with the cabinet under 902 KAR 100:110.

(253)[~~(251)~~] "Regulations of the U.S. Department of Transportation" means the regulations in 49 C.F.R. Parts 100-189.

(254)[~~(252)~~] "Rem" means a special unit of quantities expressed as dose equivalent. The dose equivalent in rems is equal to the absorbed dose in rads multiplied by the quality factor (one (1) rem = 0.01 sievert).

(255)[~~(253)~~] "Research and development" means:

(a) Theoretical analysis, exploration, or experimentation; or

(b) The extension of investigative findings and theories of a scientific or technical nature into practical application for experimental and demonstration purposes, including the experimental production and testing of models, devices, equipment, materials, and processes. Research and development does not include the internal or external administration of radiation or radioactive material to human beings.

(256)[~~(254)~~] "Residential location" means an area where structures for human habitation are located.

(257)[~~(255)~~] "Residual radioactivity" means low-level radioactive waste resulting from processing or decontamination activities that cannot be easily separated into distinct batches attributable to specific waste generators. This waste is attributable to the processor or decontamination facility, as applicable.

(258)[~~(256)~~] "Respiratory protective device" means an apparatus used to reduce an individual's intake of airborne radioactive materials.

(259)[~~(257)~~] "Restricted area" means an area access to which is limited by the licensee or registrant for purposes of protection of individuals against undue risks from exposure to radiation and radioactive materials. A restricted area shall not include areas used as residential quarters, although a separate room or rooms in a residential building may be set apart as a restricted area.

(260)[~~(258)~~] "Roentgen" or "R" means the special unit of exposure. One (1) roentgen (R) equals 2.58 x 10^{-4} coulombs per kilogram of air. See "Exposure".

(261)[~~(259)~~] "Sanitary sewerage" means a system of public sewers for carrying off waste, water, and refuse, but excludes sewage treatment facilities, septic tanks, and leach fields owned or operated by the licensee.

(262)[~~(260)~~] "Sealed source" means radioactive material that is encased in a capsule[~~permanently bonded or fixed in a capsule or matrix~~] designed to prevent leakage or escape of the radioactive material.

(263)[~~(261)~~] "Secondary dose monitoring system" means a system which terminates irradiation upon failure of the primary system.

(264)[~~(262)~~] "Self-contained breathing apparatus" or "SCBA" means an atmosphere-supplying respirator for which the breathing air source is designed to be carried by the user.

(265)[~~(263)~~] "Shallow-dose equivalent (H_S)", with respect to external exposure of the skin of the whole body or the skin of an extremity, means the dose equivalent at a tissue depth of 0.007 centimeter (seven (7) mg/cm^2).

(266)[~~(264)~~] "Shielded position" means the location within the radiographic exposure device or storage container which, by manufacturer's design, is the proper location for storage of the sealed source.

(267)[~~(265)~~] "Shielded-room radiography" means industrial radiography conducted in
a room shielded so that radiation levels at every location on the exterior meet the limitations specified in 902 KAR 100:019, Section 10.

(268)[~~(266)~~] "Shipper" means the licensed entity, the generator that offers low-level radioactive waste for transportation, and may consign the waste to a licensed waste collector, waste processor, or land disposal facility operator.

(269)[~~(267)~~] "Shipping paper" means NRC Form 540, and if required, 540A, or their equivalent, and includes the information required by the U.S. Department of Transportation in 49 C.F.R. Part 172.

(270)[~~(268)~~] "Shutter" means a device attached to the tube housing assembly which can totally intercept the useful beam and which has a lead equivalency not less than that of the tube housing assembly.

(271)[~~(269)~~] "Sievert" means:

(a) The International System (SI) unit of quantities expressed as dose equivalent. The dose equivalent in sieverts is equal to the absorbed dose in grays multiplied by the quality factor (1 Sv=100 rems).

(b) See the table in the definition of "quality factors" for the quality factors to convert absorbed dose to dose equivalent.

(272)[~~(270)~~] "Site area emergency" means the existence of situation where an event may occur, is in progress, or has occurred that may:

(a) Lead to a significant release of radioactive material; and

(b) Require a response by an off-site response organization to protect persons off site.

(273)[~~(271)~~] "Site boundary" means that line beyond which the land or property is not
owned, leased, or otherwise controlled by the licensee.

(274)[~~(272)~~] "Source" means the focal spot of the x-ray tube.

(275)[~~(273)~~] "Source changer" means a device designed and used for replacement of sealed sources in radiographic exposure devices, including those source changers also used for transporting and storage of sealed sources.

(276)[~~(274)~~] "Source holder" means a housing or assembly into which a radioactive source is placed for the purpose of facilitating the handling and use of the source.

(277)[~~(275)~~] "Source image receptor distance" or "SID" means the distance from the source to the center of the input surface of the image receptor.

(278)[~~(276)~~] "Source material" means:

(a) Uranium or thorium, or a combination thereof, in a physical or chemical form; or

(b) Ores that contain by weight 0.05 percent or more of:

1. Uranium;

2. Thorium; or

3. A combination of uranium and thorium.

(c) Source material does not include special nuclear material.

(279)[~~(277)~~] "Source of radiation" means a radioactive material or device, or equipment emitting or capable of producing radiation.

(280)[~~(278)~~] "Special form radioactive material" means radioactive material that satisfies the following conditions:

(a) It is a single solid piece or is contained in a sealed capsule that can be opened only by destroying the capsule;

(b) The piece or capsule has at least one (1) dimension not less than five (5) millimeters (0.197 inch); and

(c)1. It satisfies the test requirements specified by the NRC in 10 C.F.R. Part 71.75.

2. A special form encapsulation designed under the NRC requirements in 10 C.F.R. 71.4 in effect on June 30, 1983, and constructed prior to July 1, 1985, may continue to be used.

3. A special form encapsulation designed in accordance with the NRC requirements in 10 C.F.R. 71.4 in effect on March 31, 1996, and constructed before April 1, 1998 may continue to be used.

4. Any other special form encapsulation shall meet the specifications of this definition.

(281)[~~(279)~~] "Special nuclear material" means:

(a) Plutonium, uranium 233, uranium enriched in the isotope U-233 or in the isotope U-235, and other material which the Governor declares by order to be special nuclear material after the United States Nuclear Regulatory Commission, or successor thereto, has determined the material to be special nuclear material, but does not include source material; or

(b) Material artificially enriched by one (1) of the foregoing, but does not include source material.

(282)[~~(280)~~] "Special nuclear material in quantities not sufficient to form a critical mass" means:

(a) Uranium enriched in the isotope U-235 in quantities not exceeding 350 grams of contained U-235;

(b) U-233 in quantities not exceeding 200 grams;

(c) Plutonium in quantities not exceeding 200 grams; or

(d) A combination of them as specified by the following formula:

1. For each kind of special nuclear material, determine the ratio between the quantity of that special nuclear material and the quantity specified above for the same kind of special nuclear material.

2. The sum of these ratios for the different kinds of special nuclear material in
combination shall not exceed one (1).

3. For example, the following quantities in combination would not exceed the limitation and are within the formula:

$$\frac{175\,(\text{grams contained U-235})}{350} +$$

$$\frac{50\,(\text{grams U-233})}{200} + \frac{50\,(\text{grams Pu})}{200} = 1$$

(283)[~~(281)~~] "Special purpose x-ray system" means a radiographic x-ray system which, by design, is limited to radiographic examination of a specific anatomical region.

(284)[~~(282)~~] "Specific activity" means the radioactivity of the radionuclide per unit mass of that nuclide. The specific activity of a material in which the radionuclide is essentially uniformly distributed is the radioactivity per unit mass of the material.

(285)[~~(283)~~] "Spot check" means a procedure performed to assure that a previous calibration continues to be valid.

(286)[~~(284)~~] "Spot film" means a radiograph which is made during a fluoroscopic examination to permanently record conditions which exist during that fluoroscopic procedure.

(287)[~~(285)~~] "Spot-film device" means a device intended to transport or position a radiographic image receptor between the x-ray source and fluoroscopic image receptor. It includes a device intended to hold a cassette over the input end of an image intensifier for the purpose of making a radiograph.

(288)[~~(286)~~] "SSD" means the distance between the source and the skin of the patient.

(289)[~~(287)~~] "Stationary beam radiation therapy" means radiation therapy without displacement of one (1) or more mechanical axes relative to the patient during irradiation.

(290)[~~(288)~~] "Stochastic effect" means a health effect that occurs randomly and for which the probability of the effect occurring, rather than its severity, is assumed to be a linear function of dose plus threshold factors.

(291)[~~(289)~~] "Storage" or "waste storage" means the holding of waste for treatment or disposal for a period of twenty-four (24) hours or more.

(292)[~~(290)~~] "Storage area" means:

(a) A location, facility, or vehicle used to store, transport, or secure a radiographic exposure device, storage container, or sealed source if the source is not in use; and

(b) Which is locked or has a physical barrier to prevent accidental exposure, tampering with, or unauthorized removal of the device, container, or source.

(293)[~~(291)~~] "Storage container" means a device in which a sealed source is transported or stored.

(294)[~~(292)~~] "Stray radiation" means the sum of leakage and scattered radiation.

(295)[~~(293)~~] "Subsurface tracer study" means the release of a substance tagged with radioactive material for the purpose of tracing the movement or position of the tagged substance in the well-bore or adjacent formation.

(296)[~~(294)~~] "Supplied-air respirator "SAR" "airline respirator" means an atmosphere-supplying respirator for which the source of breathing air is not designated to be carried by the user.

(297)[~~(295)~~] "Surface contaminated object" or "SCO" means a solid object that is not classed as radioactive material, but which has radioactive material distributed on a surface. SCO must be in one (1) of two (2) groups with surface activity not exceeding the following limits:

(a) SCO-I: A solid object on which:

1. The nonfixed contamination on the accessible surface averaged over 300 cm^2 (or the area of the surface if less than 300 cm^2) does not exceed 10^{-4} microcurie/cm^2 (4 Bq/cm^2) for beta and gamma and low toxicity alpha emitters, or 10^{-5} microcurie/cm^2 (0.4 Bq/cm^2) for all other alpha emitters;

2. The fixed contamination on the accessible surface averaged over 300 cm^2 (or the area of the surface if less than 300 cm^2) does not exceed 1.0 microcurie/cm^2 ($4x10^4$ Bq/cm^2) for beta and gamma and low toxicity alpha emitters, or 0.1 microcurie/cm^2 ($4x10^3$ Bq/cm^2) for all other alpha emitters; and

3. The nonfixed contamination plus the fixed contamination on the inaccessible surface averaged over 300 cm^2 (or the area of the surface if less than 300 cm^2) does not exceed 1 microcurie/cm^2 ($4x10^4$ Bq/cm^2) for beta and gamma and low toxicity alpha emitters, for 0.1 microcurie/cm^2 ($4x10^3$ Bq/cm^2) for all other alpha emitters.

(b) SCO-II: A solid object on which the limits for SCO-I are exceeded and on which:

1. The nonfixed contamination on the accessible surface averaged over 300cm^2 (or the area of the surface if less than 300 cm^2) does not exceed 10^{-2} microcurie/cm^2 (400 Bq/cm^2) for beta and gamma and low toxicity alpha emitters or 10^{-3} microcurie/cm^2 (40 Bq/cm^2) for all other alpha emitters;

2. The fixed contamination on the accessible surface averaged over 300 cm^2 (or the area of the surface if less than 300 cm^2) does not exceed 20 microcuries/cm^2 ($8x10^5$ Bq/cm^2) for beta and gamma and low toxicity alpha emitters, or 2 microcuries/cm^2 ($8x10^4$ Bq/cm^2) for all other alpha emitters; and

3. The nonfixed contamination plus the fixed contamination on the inaccessible surface averaged over 300 cm^2 (or the area of the surface if less than 300 cm^2) does not exceed 20 microcuries/cm^2 ($8x10^5$ Bq/cm^2) for beta and gamma and low toxicity alpha emitters, or 2 microcuries/cm^2 ($8x10^4$ Bq/cm^2) for all other alpha emitters.

(298)[~~(296)~~] "Survey" means an evaluation of the radiological conditions and potential hazards incident to the production, use, transfer, release, disposal, or presence of sources of radiation. If appropriate, the evaluation shall include at least:

(a) A physical survey of the location of sources of radiation; and

(b) Measurements or calculations of levels of radiation or

concentrations or quantities of radioactive material present.

(299)[~~(297)~~] "Target" means that part of an x-ray tube or accelerator onto which a beam of accelerated particles is directed to produce ionizing radiation or other particles.

(300)[~~(298)~~] "Technique factors" means the conditions of operation. They are specified as follows:

(a) For capacitor energy storage equipment, peak tube potential in kV and quantity of charge in mAs;

(b) For field emission equipment rated for pulsed operation, peak tube potential in kV and number of x-ray pulses;

(c) For CT x-ray systems designed for pulsed operation, peak tube potential in kV, scan time in seconds, and either tube current in mA, x-ray pulse width in seconds, and the number of x-ray pulses per scan, or the product of tube current, x-ray pulse width, and the number of x-ray pulses in mAs;

(d) For CT x-ray systems not designed for pulsed operation, peak tube potential in kV, and either tube current in mA and scan time in seconds, or the product of tube current and exposure time in mAs and the scan time if the scan time and exposure time are equivalent; and

(e) For other equipment, peak tube potential in kV and tube current in mA and exposure time in seconds or the product of tube current and exposure time in mAs.

(301)[~~(299)~~] "Technically Enhanced Naturally Occurring Radioactive Material "TENORM" means N.O.R.M., which has been separated to various degrees from the original ore or other material, refining or implementing it.

(302)[~~(300)~~] "Teletherapy" means therapeutic irradiation in which the source of radiation is at a distance from the body.

(303)[~~(301)~~] "Teletherapy physicist" means the individual identified as the teletherapy physicist on a cabinet license.

(304)[~~(302)~~] "Temporary job site" means a location to which radioactive material has been dispatched to perform a job, operation, or study other than the location listed in a specific license or certificate of registration.

(305)[~~(303)~~] "Tenth-value layer (TVL)" means the thickness of a specified material that attenuates X-radiation or gamma radiation to an extent that the air kerma rate, exposure rate, or absorbed dose rate is reduced to one-tenth of the value measured without the material at the same point.

(306)[~~(304)~~] "Termination of irradiation" means the stopping of irradiation in a fashion that does not permit continuance of irradiation without the resetting of operating conditions at the control panel.

(307)[~~(305)~~] "Tests" means the process of verifying compliance with an applicable regulation.

(308)[~~(306)~~] "Therapeutic radiation machines" means x-ray or electron-producing equipment designed and used for external beam radiation therapy.

(309)[~~(307)~~] "Therapeutic-type protective tube housing" means:

(a) For x-ray therapy equipment not capable of operating at 500 kVp or above: an x-ray tube housing so constructed that the leakage radiation at a distance of one (1) meter from the target does not exceed one (1) roentgen in one (1) hour if the tube is operated at its maximum rated tube potential. Small areas of reduced protection are acceptable providing the average reading over a 100-square centimeter area at one (1) meter distance from the target does not exceed the value established in this paragraph; or

(b) For x-ray therapy equipment capable of operating at 500 kVp or above: an x-ray tube housing so constructed that the leakage radiation at a distance of one (1) meter from the target does not exceed one-tenth (0.1) percent of the useful beam exposure rate at one (1) meter from the target, for its operating conditions. Small areas of reduced protection are acceptable providing the average reading over a 100-square centimeter area at one (1) meter distance from the target does not exceed the value established in this paragraph.

(310)[~~(308)~~] "Tight-fitting facepiece" means a respiratory inlet covering that forms a complete seal with the face.

(311)[~~(309)~~] "Tomogram" means the depiction of the x-ray attenuation properties of a section through the body.

(312)[~~(310)~~] "Total effective dose equivalent" or "TEDE" means the sum of the deep-dose equivalent (for external exposures) and the committed effective dose equivalent (for internal exposures).

(313)[~~(311)~~] "Traceable to a national standard" means that a quantity or a measurement has been compared to a national standard directly or indirectly through one (1) or more intermediate steps and that comparisons have been documented.

(314)[~~(312)~~] "Transport container" means a package that is designed to provide radiation safety and security if sealed sources are transported and which meets the requirements of the 49 C.F.R. 173, Subpart I.

(315)[~~(313)~~] "Transport index" means:

(a) The dimensionless number that designates the degree of control to be exercised by the carrier during transportation, rounded up to the next tenth required to be placed on the label of a package.

(b) The transport index is determined by multiplying the maximum radiation level in millisievert (mSv) per hour at one (1) meter (3.3 feet) from the external surface of the package by 100 (equivalent to the maximum radiation level in millirem per hour at one (1) meter (3.3 feet).

(316)[~~(314)~~] "Treatment" or "waste treatment" means a method, technique, or process, including storage for radioactive decay, designed to change the physical, chemical, or biological characteristics or composition of a waste in order to render the waste for transport, storage or disposal, amendable to recovery, convertible to another usable material, or reduced in volume.

(317) "Treatment site" means the anatomical description of the tissue intended to receive a radiation dose, as described in a written directive.

(318)[~~(315)~~] "Tritium neutron generator target source" means a tritium source used within a neutron generator tube to produce neutrons.

(319)[~~(316)~~] "Tube" means an x-ray tube, unless otherwise specified.

(320)[~~(317)~~] "Tube housing assembly" means the tube housing with tube installed. It includes high-voltage or filament transformers and other appropriate elements if they are contained within the tube housing.

(321)[~~(318)~~] "Tube rating chart" means the set of curves which specify the rated limits of operation of the tube in terms of the technique factors.

(322)[~~(319)~~] "Type A quantity" means a quantity of radioactive material, the aggregate radioactivity of which does not exceed A_1 for special form radioactive material or A_2 for normal form radioactive material, where A_1 and A_2 are given in 10 C.F.R. 71 Appendix A, or may be determined by procedures described in 10 C.F.R. 71 Appendix A.

(323)[~~(320)~~] "Type B packaging" means a packaging designed to retain the integrity of containment and shielding required by U.S. Nuclear Regulatory Commission regulations if subjected to the normal conditions of transport and hypothetical accident test conditions established in 10 C.F.R. Part 71.

(324)[~~(321)~~] "Type B quantity" means a quantity of radioactive material greater than a Type A quantity.

(325)[~~(322)~~] "Uniform low-level radioactive waste manifest" or "uniform manifest" means the combination of NRC Forms 540, 541, and if necessary, 542, or their equivalents, and their respective continuation sheets as needed, or equivalent.

(326)[~~(323)~~] "Unirradiated uranium" means uranium containing not more than $2x10^3$ Bq of plutonium per gram of uranium-235, not more than 9×10^6 Bq of fission products per gram of uranium-235, and not more than 5×10^{-3} gram of uranium-236 per gram of uranium-235.

(327)[~~(324)~~] "U.S. Department of Energy" means the Department of Energy established by 42 U.S.C. 7101 et seq., to the extent that the department exercises functions formerly vested in the U.S. Atomic Energy Commission, its chairman, members, officers and components and transferred to the U.S. Energy Research and Development Administration and to the Administrator thereof and retransferred to the Secretary of Energy in 42 U.S.C. 7151, effective October 1, 1977.

(328)[~~(325)~~] "Unrefined and unprocessed ore" means ore in its natural form prior to processing, such as grinding, roasting,

beneficiating, or refining.

(329)[~~(326)~~] "Unrestricted area" means an area access to which is not controlled or limited by the licensee or registrant for purposes of protection of individuals from exposure to radiation and radioactive material.

(330)[~~(327)~~] "Uranium - natural, depleted, enriched" means:

(a) "Natural uranium" means uranium with the naturally occurring distribution of uranium isotopes (approximately 0.711 weight percent uranium-235, and the remainder by weight essentially uranium-238);

(b) "Depleted uranium" means uranium containing less uranium-235 than the naturally occurring distribution of uranium isotopes;

(c) "Enriched uranium" means uranium containing more uranium-235 than the naturally occurring distribution of uranium isotopes.

(331)[~~(328)~~] "Uranium fuel cycle" means the operations of milling of uranium ore, chemical conversion of uranium, isotopic enrichment of uranium, fabrication of uranium fuel, generation of electricity by a light-water-cooled nuclear power plant using uranium fuel, and reprocessing of spent uranium fuel to the extent that these activities directly support the production of electrical power for public use. Uranium fuel cycle shall not include mining operations, operations at waste disposal sites, transportation of radioactive material in support of these operations, and the reuse of recovered nonuranium special nuclear and byproduct materials from the cycle.

(332)[~~(329)~~] "Useful beam" means the radiation that passes through the tube housing port and the aperture of the beam limiting device if the exposure switch or timer is activated.

(333)[~~(330)~~] "User" means an individual who personally utilizes or manipulates a source of radiation.

(334)[~~(331)~~] "User seal check" or "fit check" means an action conducted by the respirator user to determine if the respirator is properly seated to the face. Examples include negative pressure check, positive pressure check, irritant smoke check, or isoamylacetate check.

(335)[~~(332)~~] "Variable-aperture beam limiting device" means a beam limiting device that has capacity for stepless adjustment of the x-ray field size at a given SID.

(336)[~~(333)~~] "Vendor" means a person who sells radiation producing machines or accelerators registerable with the cabinet as specified by 902 KAR 100:110.

(337)[~~(334)~~] "Vendor registrant" means a vendor who is registered with the cabinet.

(338)[~~(335)~~] "Vendor registration" means registration of a vendor with the cabinet described by 902 KAR 100:110.

(339)[~~(336)~~] "Very high radiation area" means an area, accessible to individuals, in which radiation levels from radiation sources external to the body may result in an individual receiving an absorbed dose in excess of 500 rads (five (5) grays) in one (1) hour at one (1) meter from a radiation source or one (1) meter from a surface that the radiation penetrates.

(340)[~~(337)~~] "Virtual source" means a point from which radiation appears to originate.

(341)[~~(338)~~] "Visible area" means that portion of the input surface of the image receptor over which incident x-ray photons are producing a visible image.

(342)[~~(339)~~] "Visiting authorized nuclear pharmacist" means a nuclear pharmacist who is not identified on the license of the licensee being visited.

(343)[~~(340)~~] "Visiting authorized user" means an authorized user who is not identified on the license of the licensee being visited.

(344)[~~(341)~~] "Waste". See "low-level radioactive waste".

(345)[~~(342)~~] "Waste collector" means an entity, operating under the cabinet, U.S. Nuclear Regulatory Commission or agreement state license whose principal purpose is to collect and consolidate low level waste generated by others and to transfer this waste, without processing or repackaging the collected waste, to another licensed waste collector, licensed waste processor, or licensed land disposal facility.

(346)[~~(343)~~] "Waste description" means the physical, chemical, and radiological description of a low-level radioactive waste as called for on NRC Form 541.

(347)[~~(344)~~] "Waste generator" means an entity, operating under the cabinet, U.S. Nuclear Regulatory Commission, or agreement state license, who:

(a) Possesses any material or component that contains radioactivity or is radioactively contaminated for which the licensee foresees no further use; and

(b) Transfers this material or component to a licensed land disposal facility or to a licensed waste collector or processor for handling or treatment prior to disposal. A licensee performing processing or decontamination services may be waste generator if the transfer of low-level radioactive waste from its facility is defined as "residual waste".

(348)[~~(345)~~] "Waste processor" means an entity, operating under a cabinet, U.S. Regulatory Commission or agreement state license, whose principal purpose is to process, repackage, or treat low-level radioactive material or waste generated by others prior to eventual transfer of waste to a licensed low-level radioactive waste land disposal facility.

(349)[~~(346)~~] "Waste type" means a waste within a disposal container having a unique physical description, such as a specific waste descriptor code or description, or a waste sorbed on or solidified in a specifically defined media.

(350)[~~(347)~~] "Wedge filter" means an added filter effecting continuous progressive attenuation on the useful beam or a part thereof.

(351)[~~(348)~~] "Week" means seven (7) consecutive days starting on Sunday.

(352)[~~(349)~~] "Weighting factor (W_T)", for an organ or tissue (T) means the proportion of the risk of stochastic effects resulting from irradiation of that organ or tissue to the total risk of stochastic effects if the whole body is irradiated uniformly. For calculating the effective dose equivalent, the values of (W_T) are:

Organ Dose Weighting Factors	
Organ or tissue	W_T
Gonads	0.25
Breast	0.15
Red bone marrow	0.12
Lung	0.12
Thyroid	0.03
Bone surfaces	0.03
Remainder	[1]0.30
Whole Body	[2]1.00

[1]0.30 results from 0.06 for each of five (5) "remainder" organs (excluding the skin and the lens of the eye) that receive the highest doses.

[2]For the purpose of weighting the external whole body dose (for adding it to the internal dose), a single weighting factor, W_T=1.0, has been specified. The use of other weighting factors for external exposure will be approved on a case-by-case basis, pursuant to 10 C.F.R. Part 20, until a time as specific guidance is issued.

(353)[~~(350)~~] "Well-bore" means a drilled hole in which wire line service operations and subsurface tracer studies are performed.

(354)[~~(351)~~] "Well-logging" means the lowering and raising of measuring devices or tools which may contain sources of radiation in well-bores or cavities for the purpose of obtaining information about the well or adjacent formations.

(355)[~~(352)~~] "Whole body" means, for purposes of external exposure, head, trunk (including male gonads), arms above the elbow, or legs above the knee.

(356)[~~(353)~~] "Wire line" means a cable containing one (1) or more electrical conductors which is used to lower and raise logging tools in the well-bore.

(357)[~~(354)~~] "Wire line service operation" means an evaluation or mechanical service which is performed in the well-bore using devices on a wire line.

(358)[~~(355)~~] "Worker" means an individual engaged in activities licensed or registered by the cabinet and controlled by a licensee or registrant, but does not include the licensee or registrant.

(359)[~~(356)~~] "Working level" or "WL" means a combination of

short-lived radon daughters (for radon-222: polonium-218, lead-214, bismuth-214, and polonium-214; and for radon-220: polonium-216, lead-212, bismuth-212, and polonium-212) in one (1) liter of air that results in the ultimate emission of $1.3x10^5$MeV of potential alpha particle energy.

(360)[~~(357)~~] "Working level month" or "WLM" means an exposure to one (1) working level for 170 hours (2,000 working hours per year/twelve (12) months per year = approximately 170 hours per month).

(361)[~~(358)~~] "Written directive" means an order in writing for a specific patient or human research subject, dated and signed by an authorized user prior to the administration of a radiopharmaceutical or radiation, except as specified in paragraph (f) of this subsection, and containing the following information:

(a) For an administration of quantities greater than thirty (30) microcuries of sodium iodide I-125 or I-131: the dosage;

(b) For a therapeutic administration of a radiopharmaceutical other than sodium iodide I-125 or I-131: the radiopharmaceutical, dosage, and route of administration;

(c) For gamma stereotactic radiosurgery: target coordinates, collimator size, plug pattern, and total dose;

(d) For teletherapy: the total dose, dose per fraction, treatment site, and overall treatment period;

(e) For high-dose-rate remote afterloading brachytherapy: the radioisotope, treatment site, and total dose; or

(f) For all other brachytherapy:

1. Prior to implementation: the radioisotope, number of sources, and source strengths; and

2. After implantation, but prior to completion of the procedure: the radioisotope, treatment site, and total source strength and exposure time (or, equivalently, the total dose).

(362)[~~(359)~~] "X-ray control" means a device which controls input power to the x-ray high-voltage generator or the x-ray tube. It includes timers, phototimers, automatic brightness stabilizers, and similar devices which control the technique factors of an x-ray exposure.

(363)[~~(360)~~] "X-ray equipment" means an x-ray system, subsystem, or component thereof. X-ray equipment is further classified as:

(a) "Mobile" means x-ray equipment mounted on a permanent base with wheels or casters for moving while completely assembled.

(b) "Portable" means x-ray equipment designed to be hand-carried.

(c) "Stationary" means x-ray equipment which is installed in a fixed location.

(d) "Transportable" means x-ray equipment installed in a vehicle or trailer.

(364)[~~(361)~~] "X-ray field" means that area of the intersection of the useful beam and one (1) of the set of planes parallel to and including the plane of the image receptor, whose perimeter is the locus of points at which the exposure rate is one-fourth (1/4) of the maximum in the intersection.

(365)[~~(362)~~] "X-ray high-voltage generator" means a device that transforms electrical energy from the potential supplied by the x-ray control to the tube operating potential. The device may also include means for transforming alternating current to direct current, filament transformers for the x-ray tube, high-voltage switches, electrical protective devices, and other appropriate elements.

(366)[~~(363)~~] "X-ray subsystem" means a combination of two (2) or more components of an x-ray system.

(367)[~~(364)~~] "X-ray system" means an assemblage of components for the controlled production of x-rays. It includes an x-ray high-voltage generator, an x-ray control, a tube housing assembly, a beam-limiting device, and necessary supporting structures. Additional components that function with the system are considered integral parts of the system.

(368)[~~(365)~~] "X-ray tube" means an electron tube designed to be used primarily for the production of x-rays.

(369)[~~(366)~~] "Year" means the period of time, beginning in January, used to determine compliance with the provisions of 902 KAR Chapter 100. The licensee or registrant may change the starting date of the year used to determine compliance by the licensee or registrant if:

(a) The change is made at the beginning of the year; and

(b) A day is not omitted or duplicated in consecutive years.

STEPHANIE MAYFIELD GIBSON, MD, FCAP, Commissioner
AUDREY TAYSE HAYNES, Secretary

APPROVED BY AGENCY: September 11, 2014

FILED WITH LRC: September 15, 2014 at 11 a.m.

CONTACT PERSON: Tricia Orme, Office of Legal Services, 275 East Main Street 5 W-B, Frankfort, Kentucky 40601, phone 502-564-7905, fax 502-564-7573, tricia.orme@ky.gov

CABINET FOR HEALTH AND FAMILY SERVICES
Department for Public Health
Division of Public Health Protection and Safety
(As Amended at ARRS, December 9, 2014)

902 KAR 100:019. Standards for protection against radiation.

RELATES TO: KRS 211.842-211.852, 211.990(4), 10 C.F.R. 20.1001-20.1906, 20.2101-20.2204, 20.2206, Appendixes A, B-20.1001-20.2401, 40 C.F.R. 190, 49 C.F.R. 100-180, 173.403(m),(w), 173.421-173.424

STATUTORY AUTHORITY: KRS 194.050, 211.090, 211.844, 10 C.F.R. 10.1001-20.1906, 20.2101-20.2204, 20.2206, Appendixes A, B-20.1001-20.2401, 40 C.F.R. 190, 49 C.F.R. 100-180, 49 C.F.R. 173.403(m),(w), 173.421-173.424,

NECESSITY, FUNCTION, AND CONFORMITY: KRS 211.844 requires the Cabinet for Health and Family Services to provide by administrative regulation for the registration and licensing of the possession or use of sources of ionizing or electronic product radiation and the handling and disposal of radioactive waste. This administrative regulation establishes standards for the protection of the user and general public against radiation exposure and establishes standards for protection against ionizing radiation resulting from activities conducted by persons issued licenses or registrations by the cabinet. This administrative regulation establishes standards to control the receipt, possession, use, transfer, and disposal of sources of radiation by a person, licensee, or registrant so the total dose to an individual (including doses resulting from licensed and unlicensed radioactive material and radiation sources other than background radiation) shall not exceed the standards for protection against radiation ***established[~~prescribed~~]*** in this administrative regulation.

Section 1. Radiation Protection Implementation. (1) This administrative regulation shall not limit actions required in order to protect against an immediate danger to public health and safety.

(2) This administrative regulation shall apply to a person licensed or registered by the cabinet to receive, possess, use, transfer, or dispose of sources of radiation.

(3) The limits in this administrative regulation shall not apply to doses due to background radiation, exposure of patients to radiation for the purpose of medical diagnosis or therapy, or voluntary participation in medical research programs.

Section 2. Radiation Protection Programs. A person, licensee, or registrant shall:

(1) Develop, document, and implement a radiation protection program commensurate with the scope and extent of the person's activities and sufficient to ensure compliance with the provisions of this administrative regulation;

(2) Use procedures and engineering controls based upon sound radiation protection principles, to the extent practical, to achieve occupational doses and doses to members of the public that shall be as low as reasonably achievable (ALARA) pursuant to 902 KAR 100:015, Section 2;

(3) Annually review the radiation protection program content and implementation; and

(4) Establish a constraint on air emissions of radioactive material to the environment, excluding radon-222 and its

daughters, to implement the ALARA requirements of subsection (2) of this section and the requirements of Section 10 of this administrative regulation.

(a) Any constraint shall ensure that the highest dose that could be received by a person shall not exceed a dose in excess of ten (10) millirems (0.1 mSv) per year.

(b) A licensee, if required to establish these constraints, shall report any exceedance as provided in Section 40 of this administrative regulation and ***shall*** take appropriate corrective action to ensure against recurrence.

Section 3. Occupational Dose Limits for Adults. (1) A person, licensee, or registrant shall control the occupational dose to individual adults, except for planned special exposures as ***established[~~described~~]*** in Section 7 of this administrative regulation, to***[~~the following dose limits~~]***:

(a) An annual limit, which shall be the more limiting of the:

1. Total effective dose equivalent being equal to five (5) rems (0.05 SV)[~~(0.50 Sv)~~]; and

2. Sum of the deep-dose equivalent and the committed dose equivalent to an individual organ or tissue, other than the lens of the eye, being equal to fifty (50) rems ((0.50) Sv)***; and[~~.~~]***

(b) The annual limits to the lens of the eye, the skin, and the extremities, which shall be:

1. A lens dose equivalent of fifteen (15) rems (0.15 Sv); and

2. A shallow-dose equivalent of fifty (50) rems (five-tenths (0.50) Sv) to the skin of the whole body or to the skin of an extremity.

(2) Doses received in excess of the annual limits, including doses received during accidents, emergencies, and planned special exposures, shall be subtracted from the limits for planned special exposures that the individual may receive during the current year and during the individual's lifetime as ***established[~~described~~]*** in Section 7(3)(a) and (b) of this administrative regulation.

(3) The assigned deep-dose equivalent and shallow-dose equivalent shall be for the part of the body receiving the highest exposure. The assigned shallow dose equivalent shall be the dose averaged over the contiguous ten (10) square centimeters of skin receiving the highest exposure. If the individual monitoring device was not in the region of highest potential exposure, the deep-dose equivalent, lens dose equivalent, and shallow-dose equivalent may be assessed from surveys or other radiation measurements for the purpose of demonstrating compliance with the occupational dose limits.

(4) Derived air concentration (DAC) and annual limit on intake (ALI) values are established in 10 C.F.R., 20, Appendix B, Table 1, and shall be used to:

(a) Determine the individual's dose as required in Section 34 of this administrative regulation; and

(b) Demonstrate compliance with the occupational dose limits.

(5) In addition to the annual dose limits, the person, licensee, or registrant shall limit the soluble uranium intake by an individual to ten (10) milligrams in a week in consideration of chemical toxicity as established in 10 C.F.R., 20 Appendix B.

(6) A person, licensee, or registrant shall reduce the dose that an individual may be allowed to receive in the current year by the amount of occupational dose received while employed by a person as described in Section 32 of this administrative regulation.

Section 4. Compliance with Requirements for Summation of External and Internal Doses. (1) If a licensee or registrant is required to monitor by both Section 13(1) and (2) of this administrative regulation, the licensee or registrant shall demonstrate compliance with the dose limits by summing external and internal doses.

(2) If a licensee or registrant is required to monitor only by Section 13(1) or (2) of this administrative regulation, summation shall not be required to demonstrate compliance with the dose limits.

(3) A licensee or registrant may demonstrate compliance with the requirements for summation of external and internal doses by meeting one (1) of the conditions specified in subsection (5) of this section and the conditions in subsections (6) and (7) of this section.

(4) The dose equivalents for the lens of the eye, the skin, and the extremities shall not be included in the summation but shall be subject to separate limits established in Section 3 of this administrative regulation.

(5) If the only intake of radionuclides occurs by inhalation, the total effective dose equivalent limit shall not be exceeded if the sum of the deep-dose equivalent divided by the total effective dose equivalent limit, and one (1) of the following, does not exceed unity:

(a) Sum of the fractions of the inhalation ALI for each radionuclide;

(b) Total number of derived air concentration-hours (DAC-hours) for radionuclides divided by 2,000; or

(c) Sum of the calculated committed effective dose equivalents to significantly irradiated organs or tissues (T) calculated from bioassay data using appropriate biological models and expressed as a fraction of the annual limit.

(6) If the occupationally exposed individual also receives an intake of radionuclides by oral ingestion greater than ten (10) percent of the applicable oral ALI, the licensee or registrant shall account for this intake and include it in demonstrating compliance with the limits.

(7) A licensee or registrant shall evaluate and, to the extent practical, account for intakes through wounds or skin absorption. The intake through intact skin has been included in the calculation of DAC for hydrogen-3 and ***does[~~may~~]*** not need to be further evaluated.

Section 5. Determination of External Dose from Airborne Radioactive Material. (1) If determining the dose from airborne radioactive material, a licensee or registrant shall include the contribution to the deep-dose equivalent, lens dose equivalent, and shallow-dose equivalent from external exposure to the radioactive cloud.

(2) If the airborne radioactive material includes radionuclides other than noble gases or the cloud of airborne radioactive material is not relatively uniform, airborne radioactivity measurements and DAC values shall not be used as the primary means to assess the deep-dose equivalent.

(3) The determination of the deep-dose equivalent to an individual shall be based upon measurements using instruments or individual monitoring devices.

Section 6. Determination of Internal Exposure. (1) For purposes of assessing dose used to determine compliance with occupational dose equivalent limits, the licensee or registrant shall, if required by Section 13 of this administrative regulation, take suitable and timely measurements of:

(a) Concentrations of radioactive materials in the air in work areas;

(b) Quantities of radionuclides in the body;

(c) Quantities of radionuclides excreted from the body; or

(d) Combinations of these measurements.

(2) A licensee or registrant shall assume an individual inhales radioactive material at the airborne concentration in which the individual is present, unless respiratory protective equipment is used, as provided in Section 19 of this administrative regulation, or the assessment of intake is based on bioassays.

(3) If specific information on the physical and biochemical properties of the radionuclides taken into the body, or the behavior or material in an individual is known, a licensee or registrant may:

(a) Use the information to calculate the committed effective dose equivalent, and, if used, the licensee or registrant shall document the information in the individual's record;

(b) Upon prior approval by the cabinet, adjust the DAC or ALI values to reflect the actual physical and chemical characteristics of airborne radioactive material (for example, aerosol size distribution or density); and

(c) Separately assess the contribution of fractional intakes of Class D, W, or Y compounds of a radionuclide, as provided in 10 C.F.R., 20 Appendix A, to the committed effective dose equivalent.

(4) If a licensee or registrant chooses to assess intakes of Class Y material using the measurements provided in subsection (1)(b) or (c) of this section, the licensee or registrant may delay the recording and reporting of the assessments for periods up to seven (7) months, unless otherwise required by Section 39 or 40 of this administrative regulation, in order to permit the licensee or registrant to make additional measurements basic to the assessments.

(5) If the identity and concentration of radionuclides in a mixture are known, the fraction of the DAC applicable to the mixture for use in calculating DAC-hours shall be the:

(a) Sum of the ratios of the concentration to the appropriate DAC value (D, W, Y) from 10 C.F.R., 20 Appendix B, for radionuclides in the mixture; or

(b) Ratio of the total concentration for radionuclides in the mixture to the most restrictive DAC value for a radionuclide in the mixture.

(6) If the identity of radionuclides in a mixture is known, but the concentration of one (1) or more of the radionuclides in the mixture is not known, the DAC for the mixture shall be the most restrictive DAC of a radionuclide in the mixture.

(7) If a mixture of radionuclides in air exists, a licensee or registrant may disregard certain radionuclides in the mixture if the:

(a) Licensee or registrant uses the total activity of the mixture in demonstrating compliance with the dose limits in Section 3 of this administrative regulation and in complying with the monitoring requirements in Section 13(2) of this administrative regulation;

(b) Concentration of a disregarded radionuclide is less than ten (10) percent of its DAC; and

(c) Sum of these percentages for the disregarded radionuclides in the mixture does not exceed thirty (30) percent.

(8) In order to calculate the committed effective dose equivalent, a licensee or registrant may assume that the inhalation of one (1) ALI or an exposure of 2,000 DAC-hours results in a committed effective dose equivalent of five (5) rems (0.05 Sv) for radionuclides having their ALIs or DACs based on the committed effective dose equivalent.

(a) If the ALI and the associated DAC are determined by the nonstochastic organ dose limit of fifty (50) rems (five-tenths (0.50) Sv), the intake of radionuclides that result in a committed effective dose equivalent of five (5) rems (0.05 Sv) (the stochastic ALI) is listed in parentheses in 10 C.F.R., 20 Appendix B. A licensee or registrant may, as a simplifying assumption, use the stochastic ALIs to determine committed effective dose equivalent.

(b) If a licensee or registrant uses the stochastic ALIs, the licensee or registrant shall also demonstrate that the limit in Section 3(1)(a)2 of this administrative regulation is met.

Section 7. Planned Special Exposures. (1) A licensee or registrant may authorize an adult worker to receive doses in addition to, and accounted for separately from the doses received under, the limits specified in Section 3 of this administrative regulation provided each of the following conditions are satisfied:

(a) The licensee or registrant authorizes a planned special exposure only in an exceptional situation if alternatives that may avoid the dose estimated to result from the planned special exposure are unavailable or impractical;

(b) The licensee or registrant, and employer if the employer is not the licensee or registrant, specifically authorize the planned special exposure, in writing, before the exposure occurs;

(c) Before a planned special exposure, the licensee or registrant ensures that the individuals involved are:

1. Informed of the purpose of the planned operation;

2. Informed of the estimated doses and associated potential risks and specific radiation levels or other conditions that may be involved in performing the task; and

3. Instructed in the measures to be taken to keep the dose ALARA considering other risks that may be present.

(2) Prior to permitting an individual to participate in a planned special exposure, a licensee or registrant shall ascertain prior doses as required by Section 32(2) of this administrative regulation during the lifetime of the individual for each individual involved.

(3) Subject to Section 3(2) of this administrative regulation, a licensee or registrant shall not authorize a planned special exposure that shall cause an individual to receive a dose from planned special exposures and doses in excess of the limits to exceed:

(a) The numerical values of the dose limits in Section 3(1) of this administrative regulation in a year; and

(b) Five (5) times the annual dose limits in Section 3(1) of this administrative regulation during the individual's lifetime.

(4) A licensee or registrant shall:

(a) Maintain records of the conduct of a planned special exposure pursuant to Section 33 of this administrative regulation; and

(b) Submit a written report pursuant to Section 41 of this administrative regulation.

(5) A licensee or registrant shall record the best estimate of the dose resulting from the planned special exposure in the individual's record and inform the individual, in writing, of the dose within thirty (30) days from the date of the planned special exposure. The dose from planned special exposures shall not be considered in controlling future occupational dose of the individual by Section 3(1) of this administrative regulation but shall be included in evaluations required by Section 7(2) and (3) of this administrative regulation.

Section 8. Occupational Dose Limits for Minors. The annual occupational dose limits for minors shall be ten (10) percent of the annual dose limits specified for adult workers in Section 3 of this administrative regulation.

Section 9. Dose Equivalent to an Embryo or Fetus. (1) A licensee or registrant shall ensure that the dose equivalent to an embryo or fetus during the entire pregnancy, due to occupational exposure of a declared pregnant woman, does not exceed five-tenths (0.5) rem (5 mSv). Recordkeeping requirements are established in Section 42 of this administrative regulation.

(2) A licensee or registrant shall make efforts to avoid substantial variation above a uniform monthly exposure rate to a declared pregnant woman to satisfy the limit in subsection (1) of this section.

(3) The dose equivalent to an embryo or fetus shall be taken as the sum of:

(a) The deep-dose equivalent to the declared pregnant woman; and

(b) The dose equivalent to the embryo or fetus resulting from radionuclides in the embryo or fetus and radionuclides in the declared pregnant woman.

(4) If the dose equivalent to the embryo or fetus is found to have exceeded five-tenths (0.5) rem (five (5) mSv), or is within 0.05 rem (five-tenths (0.5) mSv) of this dose, by the time the woman declares the pregnancy to a licensee or registrant, the licensee or registrant shall be in compliance with subsection (1) of this section if the additional dose equivalent to the embryo or fetus does not exceed 0.05 rem (five-tenths (0.5) mSv) during the remainder of the pregnancy.

Section 10. Radiation Dose Limits for Individual Members of the Public. (1) A licensee or registrant shall conduct operations to ensure that the:

(a) Total effective dose equivalent to individual members of the public from licensed, registered, and other operations shall not exceed 0.1 rem (one (1) mSv) in a year, exclusive of the dose contributions from:

1. Background radiation;

2. A medical administration the individual received;

3. An exposure to individuals administered radioactive material and released in accordance with 902 KAR 100:072, Section 27;

4. Voluntary participation in medical research programs; and

5. The licensee's or registrant's disposal of radioactive material into sanitary sewerage under 902 KAR 100:021, Section 3; and

(b) Dose in an unrestricted area from external sources, exclusive of the dose contributions from patients administered radioactive material and released in accordance with 902 KAR 100:072, Section 27, shall not exceed 0.002 rem (0.02 mSv) in one

(1) hour.

(2) If a licensee or registrant permits members of the public to have access to controlled areas, the limits for members of the public specified in this section shall apply to those individuals.

(3) A licensee, registrant, or applicant for a license or registration may apply for prior authorization to operate up to an annual dose limit for an individual member of the public of five-tenths (0.5) rem (five (5) mSv). The application shall include the following information:

(a) Demonstration of the need for, and the expected duration of, operations in excess of the limit in subsection (1) of this section;

(b) A licensee's or registrant's program to assess and control dose within the five-tenths (0.5) rem (five (5) mSv) annual limit; and

(c) The procedures to be followed to maintain the dose ALARA.

(4) In addition to the provisions of this administrative regulation, a person, licensee, or registrant subject to the provisions of U.S. Environmental Protection Agency's applicable environmental radiation standards in 40 C.F.R. 190 shall comply with those standards.

(5) The cabinet may impose additional restrictions on radiation levels in unrestricted areas and on the total quantity of radionuclides that a licensee or registrant may release in effluents in order to restrict the collective dose.

(6) In addition to the requirements in subsection (1)(a) of this section, a licensee may permit visitors to an individual who cannot be released under 902 KAR 100:072, Section 27, to receive a radiation dose greater than one tenth (0.1) rem (1 mSv) if:

(a) The radiation dose received does not exceed five-tenths (0.5) rem (5 mSv); and

(b) The authorized user, as defined in 902 KAR 100:010, has determined before the visit that it is appropriate.

Section 11. Compliance with Dose Limits for Individual Members of the Public. (1) To demonstrate compliance with the dose limits for individual members of the public in Section 10 of this administrative regulation, a licensee or registrant shall make or cause to be made surveys of:

(a) Radiation levels in unrestricted and controlled areas; and

(b) Radioactive materials in effluents released to unrestricted and controlled areas.

(2) A licensee or registrant shall show compliance with the annual dose limit in Section 10 of this administrative regulation by:

(a) Demonstrating by measurement or calculation that the total effective dose equivalent to the individual likely to receive the highest dose from the licensed operation shall not exceed the annual dose limit; or

(b) Demonstrating that:

1. The annual average concentrations of radioactive material released in gaseous and liquid effluents at the boundary of the restricted area shall not exceed the values specified in 10 C.F.R. 20, Appendix B; and

2. If an individual were continually present in an unrestricted area, the dose from external sources shall not exceed 0.002 rem (0.02 mSv) in an hour and 0.05 rem (five-tenths (0.5) mSv) in a year.

(3) Upon approval from the cabinet, a licensee or registrant may adjust the effluent concentration values in 10 C.F.R., 20 Appendix B, for members of the public, to take into account the actual physical and chemical characteristics of the effluents (for example, aerosol size distribution, solubility, density, radioactive decay equilibrium, or chemical form).

Section 12. Surveys and Monitoring. (1) A licensee or registrant shall make or cause to be made, surveys that are:

(a) Necessary for the licensee or registrant to comply with the provisions in this administrative regulation; and

(b) Reasonable under the circumstances to evaluate:

1. The magnitude and extent of radiation levels;

2. Concentrations or quantities of radioactive material; and

3. The potential radiological hazards.

(2) A licensee or registrant shall ensure that instruments and equipment used for quantitative radiation measurements (for example, dose rate and effluent monitoring) are calibrated periodically for the radiation measured.

(3) Personnel dosimeters, except direct and indirect reading pocket ionization chambers and those dosimeters used to measure the dose to the extremities, that require processing to determine the radiation doses used by licensees or registrants to comply with Section 3 of this administrative regulation, other applicable provisions of 902 KAR Chapter 100, or conditions specified in a license, shall be processed and evaluated by a dosimetry processor:

(a) Holding current personnel dosimetry accreditation from the National Voluntary Laboratory Accreditation Program (NVLAP) of the National Institute of Standards and Technology; and

(b) Approved in this accreditation process for the type of radiation or radiations included in the NVLAP program that most closely approximates the type of radiation or radiations for which the individual wearing the dosimeter is monitored.

Section 13. Conditions Requiring Individual Monitoring of External and Internal Occupational Dose. (1) A licensee or registrant shall monitor exposures to radiation and radioactive material at levels sufficient to demonstrate compliance with the occupational dose limits of this administrative regulation. At a minimum, the licensee or registrant shall monitor occupational exposure to radiation, from licensed and unlicensed, registered and unregistered radiation sources under the licensee's or registrant's control and shall supply and require the use of individual monitoring devices by:

(a) Adults likely to receive, in one (1) year from radiation sources external to the body, a dose in excess of ten (10) percent of the limits in Section 3(1) of this administrative regulation;

(b) Minors likely to receive, in one (1) year from sources external to the body, a deep dose equivalent in excess of 0.1 rem (1 mSv), a lens dose equivalent in excess of 0.15 rem (1.5 mSv), or a shallow dose equivalent to the skin or to the extremities in excess of five-tenths (0.5) rem (5 mSv);

(c) Declared pregnant women likely to receive during the entire pregnancy, from radiation sources external to the body, a deep dose equivalent in excess of 0.1 rem (1mSv). All of the occupational doses in Section 3 continue to be applicable to the declared pregnant worker as long as the embryo or fetus dose limit is not exceeded; and

(d) Individuals entering a high or very high radiation area.

(2) A licensee or registrant shall monitor, pursuant to Section 6 of this administrative regulation, the occupational intake of radioactive material by, and assess the committed effective dose equivalent to:

(a) Adults likely to receive, in one (1) year, an intake in excess of ten (10) percent of the applicable ALIs in 10 C.F.R., 20 Appendix B;

(b) Minors likely to receive, in one (1) year, a committed effective dose equivalent in excess of 0.1 rem (1 mSv); and

(c) Declared pregnant women likely to receive, during the entire pregnancy, a committed effective dose equivalent in excess of 0.1 rem (1 mSv).

Section 14. Control of Access to High Radiation Areas. (1) A licensee or registrant shall ensure that each entrance or access point to a high radiation area shall have at least one (1) of the following features:

(a) A control device that, upon entry into the area, shall cause the level of radiation to be reduced below the level an individual may receive a deep-dose equivalent of 0.1 rem (one (1) mSv) in one (1) hour at thirty (30) centimeters from the radiation source or from a surface that the radiation penetrates;

(b) A control device that shall energize a conspicuous visible or audible alarm
signal so the individual entering the high radiation area and the supervisor of the activity shall be made aware of the entry; or

(c) Entryways that shall be locked, except during periods that access to the areas
is required, with positive control over each individual entry.

(2) In place of the controls required by subsection (1) of this

section for a high radiation area, a licensee or registrant may substitute continuous direct or electronic surveillance that shall be capable of preventing unauthorized entry.

(3) A licensee or registrant may apply to the cabinet for approval of alternative methods for controlling access to high radiation areas.

(4) A licensee or registrant shall establish the controls required by subsections (1) and (3) of this section that shall not prevent individuals from leaving a high radiation area.

(5) Control shall not be required for an entrance or access point to a room or other area that is a high radiation area solely because of the presence of radioactive materials prepared for transport and packaged and labeled in accordance with 49 C.F.R. 100-180 if the packages will not remain in the area longer than three (3) days, and the dose rate at one (1) meter from the external surface of a package will not exceed 0.01 rem (0.1 mSv) per hour.

(6) Control of entrance or access to rooms or other areas in hospitals shall not be required solely because of the presence of patients containing radioactive material if personnel are in attendance who:

(a) Take the necessary precautions to prevent the exposure of individuals to radiation or radioactive material in excess of the limits established in this administrative regulation; and

(b) Operate within the ALARA provisions of the licensee's or registrant's radiation protection program.

(7) A registrant is not required to control entrance or access to rooms or other
areas containing sources of radiation capable of producing a high radiation area as described in this section if the registrant has met the specific requirements for access and control specified in 902 KAR 100:100, 100:115, and 100:155.

Section 15. Control of Access to Very High Radiation Areas. (1) In addition to the provisions in Section 14 of this administrative regulation, a licensee or registrant shall institute additional measures to ensure that an individual shall not be able to gain unauthorized or inadvertent access to areas in which radiation levels may be encountered at 500 rads (five (5) grays) or more in one (1) hour at one (1) meter from a radiation source or a surface through which the radiation penetrates.

(2) A registrant shall not be required to control entrance or access to rooms or other areas containing sources of radiation capable of producing a very high radiation area as ***established[~~described~~]*** in subsection (1) of this section if the registrant has met the specific requirements for access and control specified in 902 KAR 100:100, 100:115, and 100:155.

Section 16. Control of Access to Very High Radiation Areas for Irradiators. (1) This section shall apply to radiation from sources of radiation used in sealed sources in nonself-shielded irradiators.

(2) This section shall not apply to:

(a) Sources of radiation used in teletherapy, radiography, or completely self-shielded irradiators in which the source:

1. Is both stored and operated within the same shielding radiation barrier; and

2. In the designed configuration of the irradiator is always physically inaccessible to an individual and cannot create high levels of radiation in an area that is accessible to an individual; and

(b) Sources from which the radiation shall be incidental to some other use or to nuclear reactor-generated radiation.

(3) Areas where radiation levels may exist in excess of 500 rads (five (5) grays) in one (1) hour at one (1) meter from a source of radiation used to irradiate materials shall meet the following requirements***:[~~;~~]***

(a) An entrance or access point shall be equipped with entry control devices that:

1. Function automatically to prevent an individual from inadvertently entering the area if very high radiation levels exist;

2. Permit deliberate entry into the area only after a control device is actuated that causes the radiation level within the area, from the source of radiation, to be reduced below a level where it is possible for an individual to receive a deep-dose equivalent in excess of 0.1 rem (one (1) mSv) in one (1) hour; and

3. Prevent operation of the source of radiation if the source would produce radiation levels in the area that may result in a deep-dose equivalent to an individual in excess of 0.1 rem (one (1) mSv) in one (1) hour.

(b) Additional control devices shall be provided so that, upon failure of the entry control devices to function as required by subsection (3)(a) of this section:

1. The radiation level within the area, from the source of radiation, is reduced below a level where it is possible for an individual to receive a deep-dose equivalent in excess of 0.1 rem (one (1) mSv) in one (1) hour; and

2. Conspicuous visible and audible alarm signals ***shall be[~~are~~]*** generated to make an individual attempting to enter the area aware of the hazard, and at least one (1) other authorized individual who is physically present, familiar with the activity, and prepared to render or summon assistance, aware of the failure of the entry control devices;

(c) A licensee or registrant shall provide control devices so that, upon failure or removal of physical radiation barriers other than the source's shielded storage container:

1. The radiation level from the source of radiation shall be reduced below a level where it is possible for an individual to receive a deep-dose equivalent in excess of 0.1 rem (one (1) mSv) in one (1) hour; and

2. Conspicuous visible and audible alarm signals shall be generated to make potentially affected individuals aware of the hazard, and a licensee, registrant, or at least one (1) other individual who is familiar with the activity and prepared to render or summon assistance, aware of the failure or removal of the physical barrier;

(d) If the shield for the stored source is a liquid, the licensee or registrant shall provide means to:

1. Monitor the integrity of the shield; and

2. Automatically signal loss of adequate shielding;

(e) Physical radiation barriers that comprise permanent structural components, such as walls, that have no credible probability of failure or removal in ordinary circumstances need not meet the requirements of paragraphs (c) and (d) of this subsection;

(f) An area shall be equipped with devices that automatically generate conspicuous visible and audible alarm signals:

1. To alert personnel in the area before the source can be put into operation;

2. In sufficient time for an individual in the area to operate a clearly identified control device, which is installed in the area and can prevent the source from being put into operation;

(g) An area shall be controlled by use of administrative procedures and devices as are necessary to ensure that the area is cleared of personnel prior to use of the source;

(h) An area shall be checked by a radiation measurement to ensure that, prior to the first individual's entry into the area after use of the source of radiation, the radiation level from the source of radiation in the area is below a level where it is possible for an individual to receive a deep-dose equivalent in excess of 0.1 rem (one (1) mSv) in one (1) hour;

(i) The entry control devices required in paragraph (a) of this subsection shall have been tested for proper functioning as follows:

1. Daily prior to initial operation with the source of radiation, unless operations were continued uninterrupted from a previous day;

2. Prior to resumption of operation of the source of radiation after an unintended interruption; and

3. By adherence to a submitted schedule for periodic tests of the entry control and warning systems;

(j) A licensee or registrant shall not conduct operations if control devices are not functioning properly, other than those necessary to place the source of radiation in safe condition or to effect repairs on controls; and

(k) Entry and exit portals used in transporting materials to and from the irradiation area, and not intended for use by individuals, shall be controlled by devices and administrative procedures as are necessary to physically protect and warn against inadvertent entry by an individual through these portals. Exit portals for processed materials shall be equipped to detect and signal the

presence of loose radiation sources carried toward an exit to automatically prevent loose radiation sources from being carried out of the area.

(4)(a) Persons holding licenses or registrations, or applicants for licenses or registrations, for radiation sources may apply to the cabinet for approval of the use of alternative safety measures if they:

1. Are governed by the provisions of subsection (3) of this section; and

2. May be used in a variety of positions or in locations, such as open fields or forests, that make it impracticable to comply with provisions of subsection (3) of this section (for example, those for the automatic control of radiation levels).

(b) Alternative safety measures shall provide ***[a degree of]***personnel protection equivalent to those specified in subsection (3) of this section.

(c) At least one (1) of the alternative measures shall include an entry-preventing interlock control, based on a measurement of the radiation, that ensures the absence of high radiation levels before an individual may gain access to the area in which sources of radiation are used.

(5) Entry control devices required by subsections (3) and (4) of this section shall be established in a way that an individual shall not be prevented from leaving the area.

Section 17. Use of Process or Other Engineering Controls. The licensee or registrant shall use, to the extent practicable, process or other engineering controls (such as containment, decontamination, or ventilation) to control the concentration of radioactive material in air.

Section 18. Use of Other Controls. (1) If it is not practicable to apply process or other engineering controls to control the concentrations of radioactive material in air to values below those that define an airborne radioactivity area, a licensee or registrant shall, consistent with maintaining the total effective dose equivalent ALARA, increase monitoring and limit intakes by one (1) or more of the following means:

(a) Control of access;

(b) Limitation of exposure times;

(c) Use of respiratory protection equipment; or

(d) Other controls.

(2) If the licensee or registrant performs an ALARA analysis to determine if respirators should be used, the licensee or registrant may consider safety factors other than radiological factors. The licensee or registrant may also consider the impact of respirator use on workers' industrial health and safety.

Section 19. Use of Individual Respiratory Protection Equipment. (1) If a licensee or registrant uses respiratory protection equipment to limit the intake of radioactive material:

(a)1. The licensee or registrant shall use only respiratory protection equipment that shall be tested and certified by the National Institute for Occupational Safety and Health (NIOSH); or

2. Prior to using equipment that has not been tested or certified by NIOSH, or for which there exists no schedule for testing or certification, the licensee or registrant shall submit to the cabinet an application for authorized use of that equipment, except as provided in this administrative regulation.

a. The application shall include evidence that the material and performance characteristics of the equipment are capable of providing the proposed degree of protection under anticipated condition of use; and

b. The material and performance characteristics shall be demonstrated either by licensee or registrant testing or on the basis of reliable test information;

(b) A licensee or registrant shall implement and maintain a respiratory protection program that shall include:

1. Air sampling sufficient to identify the potential hazard, permit proper equipment selection, and estimate doses;

2. Surveys and bioassays, as appropriate, to evaluate actual intakes;

3. Testing of respirators for operability (user seal check for face sealing devices and functional check for others) immediately prior to each use;

4. Written procedures regarding:

a. Respirator selection;

b. Supervision and training of respirator users;

c. Monitoring, including air sampling and bioassays;

d. Fit testing;

e. Breathing air quality;

f. Inventory and control;

g. Storage, issuance, maintenance, repair, testing, and quality assurance of respiratory protection equipment;

h. Recordkeeping; and

i. Limitations on periods of respirator use and relief from respirator use;

5. Determination by a physician prior to initial fitting of a face sealing respirator, and either every twelve (12) months or periodically at a frequency determined by a physician, that the individual user shall be medically fit to use the respiratory protection equipment; and

6. Fit testing, with a fit factor ten (10) times the APF for negative pressure devices and a fit factor greater than or equal to 500 for any positive pressure, continuous flow, and pressure-demand devices, before the first field use of tight fitting, face-sealing respirators and periodically thereafter at a frequency not to exceed one (1) year. Fit testing shall be performed with the facepiece operating in the negative pressure mode;

(c) A licensee or registrant shall issue a written policy statement on respirator usage covering the:

1. Use of process or other engineering controls, instead of respirators;

2. Routine, nonroutine, and emergency use of respirators; and

3. Periods of respirator use and relief from respirator use;

(d) A licensee or registrant shall advise a respirator user that the user may leave the area for relief from respirator use in the event of:

1. Equipment malfunction;

2. Physical or psychological distress;

3. Procedural or communication failure;

4. Significant deterioration of operating conditions; or

5. Other conditions that may require relief;

(e) A licensee or registrant, when selecting respiratory devices, shall:

1. Consider limitations appropriate to type and mode of use;

2. Provide visual correction, adequate communication, low temperature work environments, and concurrent use of other safety or radiological equipment; and

3. Use equipment in a way as not to interfere with the proper operation of the respirator;

(f) Standby rescue persons shall:

1. Be required if one-piece atmosphere-supplying suits or any combination of supplied air respiratory protection device and personnel protective equipment are used from which an unaided individual would have difficulty extricating himself or herself;

2. Be equipped with respiratory protection devices or other apparatus appropriate for the potential hazards;

3. Observe or otherwise maintain continuous communication with the workers (visual, voice, signal line, telephone, radio, or other suitable means); and

4. Be immediately available to assist them in case of a failure of the air supply or for any other reason that requires relief from distress;

(g) A sufficient number of standby rescue persons shall be immediately available to assist all users of this type of equipment and to provide effective emergency rescue if needed;

(h) Atmosphere-supplying respirators shall be supplied with respirable air of grade D quality or better as defined by Compressed Gas Association in publication G-7.1, Commodity Specification for Air, and included in the regulations of the Occupational Safety and Health Administration (29 C.F.R. 1910.134(i)(1)(ii)(A) through (E)). Grade D quality of air criteria include:

1. Oxygen content (v/v) of 19.5-23.5 percent[%];

2. Hydrocarbon (condensed) content of five (5) milligrams per

cubic meter of air or less;

3. Carbon monoxide (CO) content of ten (10) parts per million (ppm) or less;

4. Carbon dioxide content of 1,000 ppm or less; and

5. Lack of noticeable odor;

(i) The licensee or registrant shall ensure that no objects, materials, or substances, such as, facial hair, or any conditions that interfere with the face-facepiece seal or valve function, and that are under the control of the respirator wearer, are present between the skin of the wearer's face and the sealing surface of a tight-fitting respirator facepiece; and

(j)1. In estimating the dose to individuals from intake of airborne radioactive materials, the concentration of radioactive material in the air that is inhaled when respirators are worn is initially assumed to be the ambient concentration in air without respiratory protection divided by the assigned protection factor.

2. If the dose is later found to be greater than the estimated dose, the corrected value shall be used.

3. If the dose is later found to be less than the estimated dose, the corrective value may be used.

(2) The licensee shall obtain authorization from the cabinet before using assigned protection factors in excess of those specified in 10 C.F.R. 20, Appendix A. The cabinet may authorize a licensee to use higher assigned protection factors on receipt of an application that:

(a) Describes the situation for which a need exists for higher protection factors; and

(b) Demonstrates that the respiratory protection equipment provides these higher protection factors under the proposed conditions of use.

Section 20. Further Restrictions on the Use of Respiratory Protection Equipment. The cabinet may impose restrictions in addition to those in Sections 18 and 19 of this administrative regulation and 10 C.F.R. 20, Appendix A to:

(1) Ensure that the respiratory protection program of the licensee shall be adequate to limit doses to individuals from intakes of airborne radioactive materials consistent with maintaining total effective dose equivalent ALARA; and

(2) Limit the extent to which a licensee shall use respiratory protection equipment instead of process or other engineering controls.

Section 21. Security of Sources of Radiation. A licensee or registrant shall secure from unauthorized removal or access, licensed materials stored in controlled or unrestricted areas.

Section 22. Control of Sources of Radiation Not in Storage. A licensee or registrant shall control and maintain constant surveillance of licensed or registered material in a controlled or unrestricted area and not in storage.

Section 23. Caution Signs and Standard Radiation Symbol. (1) Unless otherwise authorized by the cabinet, the symbol ***established in[~~prescribed by~~]*** this section shall use the colors magenta, purple, or black on yellow background. The symbol ***established in[~~prescribed by~~]*** this section shall be the three (3) bladed design:

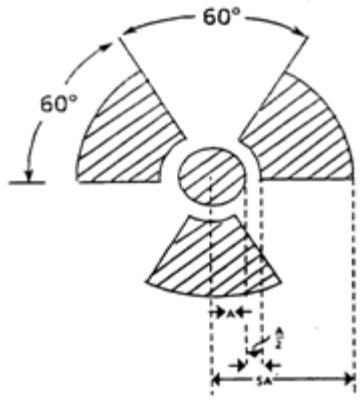

RADIATION SYMBOL

(a) Cross-hatched area shall be magenta, purple, or black; and

(b) The background shall be yellow.

(2) Exception to color requirements for standard radiation symbol. A licensee or registrant may label sources, source holders, or device components containing sources of radiation subjected to high temperatures with conspicuously etched or stamped radiation caution symbols and without a color requirement.

(3) Additional information on signs and labels. In addition to the contents of signs and labels prescribed in this section, a licensee or registrant may provide on or near the required signs and labels additional information, as appropriate, to make individuals aware of potential radiation exposures and to minimize the exposures.

Section 24. Posting Requirements. (1) Posting of radiation areas. A licensee or registrant shall post a radiation area with a conspicuous sign or signs bearing the radiation symbol and the words: "CAUTION, RADIATION AREA".

(2) Posting of high radiation areas. A licensee or registrant shall post a high radiation area with a conspicuous sign or signs bearing the radiation symbol and the words: "CAUTION, HIGH RADIATION AREA" or "DANGER, HIGH RADIATION AREA".

(3) Posting of very high radiation areas. A licensee or registrant shall post a very high radiation area with a conspicuous sign or signs bearing the radiation symbol and words: "GRAVE DANGER, VERY HIGH RADIATION AREA".

(4) Posting of airborne radioactivity areas. A licensee or registrant shall post an airborne radioactivity area with a conspicuous sign or signs bearing the radiation symbol and the words: "CAUTION, AIRBORNE RADIOACTIVITY AREA" or "DANGER, AIRBORNE RADIOACTIVITY AREA".

(5) Posting of areas or rooms in which licensed or registered material shall be used or stored. A licensee or registrant shall post an area or room in which there is used or stored an amount of licensed or registered material exceeding ten (10) times the quantity of the material specified in 902 KAR 100:030 with a conspicuous sign or signs bearing the radiation symbol and the words "CAUTION, RADIOACTIVE MATERIAL(S)" or "DANGER, RADIOACTIVE MATERIAL(S)".

Section 25. Exceptions to Posting Requirements. (1) A licensee or registrant shall not be required to post caution signs in areas or rooms containing sources of radiation for periods of less than eight (8) hours if the following conditions are met:

(a) The sources of radiation are constantly attended during these periods by an individual who takes the precautions necessary to prevent the exposure of individuals to radiation or radioactive materials in excess of the limits established in this administrative regulation; and

(b) The area or room ***is[~~are~~]*** subject to the licensee's or registrant's control.

(2) Rooms or other areas in hospitals occupied by patients shall not be required to be posted with caution signs pursuant to Section 24 of this administrative regulation if the patient could be released from licensee control in accordance with 902 KAR 100:072, Section 27.

(3) A room or area is not required to be posted with a caution sign because of the presence of a sealed source if the radiation level at thirty (30) centimeters from the surface of the source container or housing does not exceed 0.005 rem (0.05 mSv) per hour.

(4) Rooms in hospitals or clinics that are used for teletherapy are exempt from the requirement to post caution signs under Section 24 of this administrative regulation if:

(a)[~~1.~~] Access to the room is controlled pursuant to 902 KAR 100:072, Section 50; and

(b)[~~2.~~] Personnel in attendance take necessary precautions to prevent the inadvertent exposure of workers, other patients, and members of the public to radiation in excess of the limits established in this administrative regulation.

Section 26. Labeling Containers. (1) A licensee or registrant shall ensure a container of licensed or registered material bears a durable, clearly visible label with the radiation symbol and the words "CAUTION, RADIOACTIVE MATERIAL" or "DANGER, RADIOACTIVE MATERIAL".

(a) The label shall provide the following information:

1. Radionuclide present;
2. An estimate of the quantity of radioactivity;
3. Date the activity is estimated;
4. Radiation levels;
5. Kinds of materials; and
6. Mass enrichment.

(b) Information in this subsection shall permit individuals handling or using the containers, or working in the vicinity of the containers, to take precautions to avoid or minimize exposures.

(2) A licensee or registrant shall, prior to removal or disposal of empty uncontaminated containers to unrestricted areas:

(a) Remove or deface the radioactive material label; or

(b) Clearly indicate the container no longer contains radioactive materials.

Section 27. Exemptions to Labeling Requirements. (1) A licensee or registrant shall not be required to label:

(a) Containers holding licensed or registered material in quantities less than the quantities listed in 902 KAR 100:030;

(b) Containers holding licensed or registered material in concentrations less than those specified in 10 C.F.R. 20, Appendix B;

(c) Containers attended by an individual who takes precautions necessary to prevent the exposure of individuals in excess of the limits established by this administrative regulation;

(d) Containers if they are in transport and packaged and labeled in accordance with 49 C.F.R. Parts 100-180;***[or]***

(e) Containers that are accessible only to individuals authorized to handle or use them, or to work in the vicinity of the containers, if the contents are identified to these individuals by a readily available written record (for example, containers in locations that include water-filled canals, storage vaults, or hot cells). The record shall be retained as long as the containers are in use for the purpose indicated on the record; or

(f) Installed manufacturing or process equipment, such as chemical process equipment, piping, and tanks.

(2) Labeling of packages containing radioactive materials shall be required by the U.S. Department of Transportation (DOT) if the amount and type of radioactive material exceeds the limits for an excepted quantity or article pursuant to 49 C.F.R. 173.403 and 173.421-173.424.

Section 28. Procedures for Receiving and Opening Packages. (1) A licensee or registrant who expects to receive a package containing quantities of radioactive material in excess of a Type A quantity pursuant to 902 KAR 100:010 shall make arrangements to receive:

(a) The package if the carrier offers it for delivery; or

(b) Notification of the arrival of the package at the carrier's terminal and take possession of the package expeditiously.

(2)(a) A licensee or registrant shall monitor the external surfaces of a labeled package for:

1. Radioactive contamination unless the package contains only radioactive material in the form of a gas or in special form as defined in 902 KAR 100:010; and

2. Radiation levels unless the package contains quantities of radioactive material that are less than or equal to the Type A quantity defined in 902 KAR 100:010; and

(b) All packages known to contain radioactive material for radioactive contamination and radiation levels if there is evidence of potential contamination such as packages that are crushed, wet, or damaged.

(3) A licensee or registrant shall perform the monitoring required by subsection (2) of this section as soon as practicable after receipt of the package, but not later than three (3) hours:

(a) After the package is received at the licensee's facility if received during the licensee's or registrant's normal working hours; or

(b) From the beginning of the next working day if received after working hours.

(4) A licensee or registrant shall immediately notify the final delivery carrier and the Manager of the Radiation Health Branch by telephone if:

(a) Removable radioactive surface contamination exceeds the limits of 902 KAR 100:070, Section 17; or

(b) External radiation levels exceed the limits of 902 KAR 100:070, Section 17.

(5) A licensee or registrant shall:

(a) Establish, maintain, and retain written procedures for safely opening packages in which radioactive material is received; and

(b) Ensure that the procedures are followed and due consideration is given to special instructions for the type of package being opened.

(6) A licensee or registrant transferring special form sources in licensee or registrant owned or operated vehicles to and from a work site shall be exempt from the contamination monitoring requirements of subsection (2) of this section, but shall not be exempt from the survey requirement for measuring radiation levels that are required to ensure the source shall remain properly lodged in its shield.

Section 29. General Provisions for Records. (1)(a) A licensee or registrant shall use the units curie, rad, and rem, including multiples and subdivisions, and shall clearly indicate the units of quantities on records required by this administrative regulation.

(b)1. All quantities shall be recorded as stated in paragraph (a) of this section, except that the licensee may record quantities in the International System of Units (SI) in parentheses following each of the units specified in paragraph (a) of this section.

2. Information shall be recorded in SI or in SI and units as specified in paragraph (a) of this section when recording information on shipment manifests, as required in 902 KAR 100:021, Section 9.

(2) A licensee or registrant shall make a clear distinction among the quantities entered on the records required by this administrative regulation, such as:

(a) Total effective dose equivalent;

(b) Shallow-dose equivalent;

(c) Eye dose equivalent;

(d) Deep-dose equivalent; and

(e) Committed effective dose equivalent.

Section 30. Records of Radiation Protection Programs. (1) A licensee or registrant shall maintain records of the radiation protection program, including:

(a) The provisions of the program; and

(b) Audits and other reviews of program content and implementation.

(2) A licensee or registrant shall retain records required by subsection (1)(a) of this section until the cabinet terminates each pertinent license requiring the record.

(3) A licensee or registrant shall retain records required by subsection (1)(b) of this section for at least three (3) years after the record is made.

Section 31. Records of Surveys. (1) A licensee or registrant shall:

(a) Maintain records showing the results of surveys and calibrations required by Sections 12 and 28(2) of this administrative regulation; and

(b) Retain records for at least three (3) years after the record is made.

(2) A licensee or registrant shall retain the following records until the cabinet terminates the pertinent license or registration requiring the record:

(a) Results of surveys to determine the dose from external sources of radiation and used, in the absence of or in combination with individual monitoring data, in the assessment of individual dose equivalents;

(b) Results of measurements and calculations used to determine individual intakes of radioactive material and used in the assessment of internal dose;

(c) Results of air sampling, surveys, and bioassays required pursuant to Section 19(1)(b)1. and 2. of this administrative regulation; and

(d) Results of measurements and calculations used to evaluate the release of radioactive effluents to the environment.

Section 32. Determination of Prior Occupational Dose. (1) For an individual likely to receive, in a year, an occupational dose requiring monitoring under Section 13 of this administrative regulation, the licensee or registrant shall:

(a) Determine the occupational radiation dose received during the current year; and

(b) Attempt to obtain the records of lifetime cumulative occupational radiation dose.

(2) Prior to permitting an individual to participate in a planned special exposure, a licensee or registrant shall determine:

(a) The internal and external doses from previous planned special exposures; and

(b) Doses in excess of the limits, including doses received during accidents and emergencies, received during the lifetime of the individual.

(3) In complying with the requirements of subsection (1) of this section, a licensee or registrant may:

(a) Accept, as a record of the occupational dose the individual received during the current year, a written signed statement from the individual or from the individual's most recent employer for work involving radiation exposure, that discloses the nature and amount of an occupational dose the individual may have received during the current year;

(b) Accept, as the record of lifetime cumulative radiation dose, an up-to-date NRC Form 4, Cumulative Occupational Dose History, or equivalent, signed by the individual and counter-signed by an:

1. Appropriate official of the most recent employer for work involving radiation exposure; or

2. The individual's current employer if the individual is not employed by the licensee or registrant; or

(c) Obtain reports of the individual's dose equivalent from the most recent employer for work involving radiation exposure, or the individual's current employer if the individual is not employed by the licensee or registrant, by telephone, telegram, electronic media, or letter. If the authenticity of the transmitted report cannot be established, a licensee or registrant shall request a written verification of the dose data.

(4) A licensee or registrant shall record the exposure history, as required by subsection (1) of this section, on NRC Form 4, Cumulative Occupational Dose History, or other clear and legible record, of the information required on that form.

(a) The form or record shall:

1. Show each period the individual received occupational exposure to radiation or radioactive material; and

2. Be signed by the individual who received the exposure.

(b) For each period a licensee or registrant obtains reports, the licensee or registrant shall use the dose shown in the report in preparing NRC Form 4, Cumulative Occupational Dose History.

(c) For a period in which a licensee or registrant does not obtain a report, the licensee shall place a notation on NRC Form 4, Cumulative Occupational Dose History, indicating the periods of time for which data are not available.

(5) If a licensee is unable to obtain a complete record of an individual's current and previously accumulated occupational dose, the licensee or registrant shall assume:

(a) In establishing administrative controls under Section 3(6) of this administrative regulation for the current year, that the allowable dose limit for the individual is reduced by 1.25 rems (twelve and five-tenths (12.5) mSv) for each quarter for which records were unavailable and the individual was engaged in activities that may have resulted in occupational radiation exposure; and

(b) That the individual is not available for planned special exposures.

(6) A licensee or registrant shall:

(a) Retain the records on NRC Form 4, Cumulative Occupational Dose History, or equivalent, at least until the cabinet terminates the pertinent license or registration requiring this record; and

(b) Retain records used in preparing NRC Form 4, Cumulative Occupational Dose History, for at least three (3) years after the record is made.

Section 33. Records of Planned Special Exposures. (1) For each use of the provisions of Section 7 of this administrative regulation for planned special exposures, a licensee or registrant shall maintain records that include:

(a) The name of the management official who authorized the planned special exposure;

(b) A copy of the signed authorization; and

(c) Description of:

1. The exceptional circumstances requiring the use of a planned special exposure;

2. What actions were necessary;

3. Why the actions were necessary;

4. How doses were maintained ALARA;

5. What individual and collective doses were expected to result; and

6. The doses actually received in the planned special exposure.

(2) A licensee or registrant shall retain the records at least until the cabinet terminates the pertinent license or registration requiring these records.

Section 34. Records of Individual Monitoring Results. (1) A licensee or registrant shall maintain records of doses received:

(a) By individuals for whom monitoring was required by Section 13 of this administrative regulation; and

(b) During planned special exposures, accidents, and emergency conditions.

(2) The recordkeeping requirements shall include, if applicable:

(a) Deep-dose equivalent to the whole body;

(b) Lens dose equivalent;

(c) Shallow-dose equivalent to the skin and extremities;

(d) Estimated intake of radionuclides;

(e) Committed effective dose equivalent assigned to the intake of radionuclides;

(f) Specific information used to calculate the committed effective dose equivalent under Section 6(1) and (3), and Section 13 if required, of this administrative regulation;

(g) Total effective dose equivalent, if required by Section 4 of this administrative regulation; and

(h) Total of the deep-dose equivalent and the committed dose to the organ receiving the highest total dose.

(3) A licensee or registrant shall make entries of the records specified in subsection (1) of this section at least annually.

(4) A licensee or registrant shall maintain the records specified in subsection (1) of this section on NRC Form 5, Occupational Dose Record for a Monitoring Period, in accordance with the instructions for NRC Form 5, or in clear and legible records containing the information required by NRC Form 5.

(5) The records required under this section shall be protected from public disclosure because of their personal privacy nature.

(6) A licensee or registrant shall maintain the:

(a) Records of dose to an embryo or fetus with the records of dose to the declared pregnant woman; and

(b) Declaration of pregnancy on file, which may be maintained separately from the dose records.

(7) A licensee or registrant shall retain each required form or record at least until the cabinet terminates the pertinent license or registration requiring the record.

(8) Assessments of dose equivalent and records made using units in effect before a licensee's or registrant's adoption of this administrative regulation need not to be changed.

Section 35. Records of Dose to Individual Members of the Public. (1) A licensee or registrant shall maintain records sufficient to demonstrate compliance with the dose limit for individual members of the public.

(2) A licensee or registrant shall retain the records required by subsection (1) of this section at least until the cabinet terminates the pertinent license or registration requiring the record.

Section 36. Records of Testing Entry Control Devices for Very High Radiation Areas. (1) A licensee or registrant shall maintain records of tests made under Section 16(3)(i) of this administrative regulation on entry control devices for very high radiation areas. These records shall include the date, time, and results of each test of function.

(2) A licensee or registrant shall retain the records required by subsection (1) of this section for at least three (3) years after the record is made.

Section 37. Form of Records. (1) Records required by 902 KAR Chapter 100 shall be legible throughout the specified retention period.

(2) The record shall be:

(a) The original;

(b) A reproduced copy; or

(c) A microform if the copy or microform is authenticated by authorized personnel and the microform is capable of producing a clear copy throughout the required retention period.

(3) The record may be stored in electronic media with the capability for producing legible, accurate, and complete records during the required retention period.

(4) Records such as letters, drawings, and specifications shall include pertinent information such as stamps, initials, and signatures.

(5) A licensee or registrant shall maintain adequate safeguards against tampering with and loss of records.

Section 38. Reports of Theft or Loss of Licensed or Registered Sources of Radiation. (1) Telephone reports.

(a) A licensee or registrant shall report by telephone as follows:

1. Immediately after its occurrence becomes known to the licensee or registrant, lost, stolen, or missing licensed or registered material in an aggregate quantity equal to or greater than 1,000 times the quantity specified in 902 KAR 100:030 under circumstances in which it appears to the licensee or registrant that an exposure may result to persons in unrestricted areas; or

2. Within thirty (30) days after the occurrence of lost, stolen, or missing licensed or registered material becomes known to the licensee or registrant, licensed or registered material in a quantity greater than ten (10) times the quantity pursuant to 902 KAR 100:030 still missing at this time.

(b) Reports shall be made to the cabinet.

(2) Written reports.

(a) A licensee or registrant required to make a report pursuant to subsection (1) of this section shall, within thirty (30) days after making the telephone report, make a written report setting forth the following information:

1. Description of the licensed or registered material involved, including:

a. Kind;

b. Quantity; and

c. Chemical and physical form;

2. Description of the circumstances under which the loss or theft occurred;

3. Statement of disposition, or probable disposition, of the licensed or registered material involved;

4. Exposures of individuals to radiation, circumstances under which the exposures occurred, and the possible total effective dose equivalent to persons in unrestricted areas;

5. Actions that have been or shall be taken to recover the material; and

6. Procedures or measures that have been or shall be adopted to ensure against a recurrence of the loss or theft of licensed or registered material.

(b) Reports shall be made to the cabinet.

(3) Subsequent to filing the written report, a licensee or registrant shall report additional substantive information on the loss or theft within thirty (30) days after the licensee or registrant learns of the information.

(4) A licensee or registrant shall prepare and file a report with the cabinet as required by this section so that names of individuals who may have received exposure to radiation shall be stated in a separate and detachable part of the report.

Section 39. Notification of Incidents. (1) Immediate notification. A licensee or registrant shall immediately report an event involving radioactive material possessed by the licensee or registrant that may have caused, or threatens to cause, one (1) or more of the following conditions:

(a) An individual may receive:

1. A total effective dose equivalent of twenty-five (25) rems (0.25 Sv) or more;

2. A lens dose equivalent of seventy-five (75) rems (0.75 Sv) or more; or

3. A shallow-dose equivalent to the skin or extremities of 250 rads (two and five-tenths (2.5) Gy) or more;

(b) The release of radioactive material, inside or outside of a restricted area, so that, had an individual been present for twenty-four (24) hours, the individual may have received an intake five (5) times the occupational annual limit on intake. The provisions of this paragraph shall not apply to locations in which personnel are not normally stationed during routine operations, such as in hot-cells or process enclosure;

(c) A loss of one (1) working week or more of the operation of facilities affected; or

(d) Damage to property in excess of $200,000.

(2) Twenty-four (24) hour notification. A licensee or registrant shall, within twenty-four (24) hours of discovery of the event, report an event involving loss of control of licensed or registered source of radiation possessed by the licensee or registrant that may have caused, or shall threaten to cause, one (1) or more of the following conditions:

(a) An individual to receive, in a period of twenty-four (24) hours:

1. A total effective dose equivalent exceeding five (5) rems (0.05 Sv);

2. A lens dose equivalent exceeding fifteen (15) rems (0.15 Sv); or

3. A shallow-dose equivalent to the skin or extremities exceeding fifty (50) rems (five-tenths (0.5) Sv);

(b) The release of radioactive material, inside or outside of a restricted area so that, had an individual been present for twenty-four (24) hours, the individual may have received an intake in excess of one (1) occupational annual limit on intake. The provisions of this paragraph shall not apply to locations in which personnel are not normally stationed during routine operations, such as in hot-cells or process enclosures;

(c) A loss of one (1) day or more of the operation of facilities affected; or

(d) Damage to property in excess of $2,000.

(3) A licensee or registrant shall prepare and file a report with the cabinet as required by this section so that names of individuals who have received exposure to radiation or radioactive material are stated in a separate and detachable part of the report.

(4) Licensees or registrant shall make reports required by

subsections (1) and (2) of this section to the cabinet by[~~:~~

~~(a)~~] telephone[~~;~~

~~(b) Telegram;~~

~~(c) Mailgram; or~~

~~(d) Facsimile~~].

(5) The provisions of this section shall not include doses that result from planned special exposures that are within the limits for planned special exposures, and are reported under Section 41 of this administrative regulation.

Section 40. Reports of Exposures, Radiation Levels, and Concentrations of Radioactive Material Exceeding the Limits. (1) Reportable events. In addition to the notification required by Section 39 of this administrative regulation, a licensee or registrant shall submit a written report within thirty (30) days after learning of one (1) or more of the following occurrences:

(a) An incident for which notification shall be required by Section 39 of this administrative regulation; or

(b) Doses in excess of one (1) of the following:

1. Occupational dose limits for adults in Section 3 of this administrative regulation;

2. Occupational dose limits for a minor in Section 8 of this administrative regulation;

3. Limits for an embryo or fetus of a declared pregnant woman in Section 9 of this administrative regulation;

4. Limits for an individual member of the public in Section 10 of this administrative regulation;

5. Applicable limit in the license or registration; or

6. ALARA constraints for air emissions established under Section 2(4);

(c) Levels of radiation or concentrations of radioactive material in:

1. A restricted area in excess of an applicable limit in the license or registration; or

2. An unrestricted area in excess of ten (10) times an applicable limit set forth in this administrative regulation, the license, or the registration, regardless of exposure of an individual in excess of the limits in Section 10 of this administrative regulation occurs; or

(d) For a person, agency, or licensee subject to the provisions of 40 C.F.R. 190, levels of radiation or releases of radioactive material in excess of those standards, or conditions related to those standards.

(2) Contents of reports.

(a) A report required by subsection (1) of this section shall describe the extent of exposure of individuals to radiation and radioactive material, including, as appropriate:

1. Estimates of each individual's dose;

2. The levels of radiation and concentrations of radioactive material involved;

3. The cause of the elevated exposures, dose rates, or concentrations; and

4. Corrective steps taken or planned to ensure against a recurrence, including the schedule for achieving conformance with applicable limits, ALARA constraints and environmental standards, and associated license or registration conditions.

(b) A report filed under subsection (1) of this section shall include for each individual exposed:

1. Name of the individual;

2. Social Security number; and

3. Date of birth.

(c) The report shall be prepared so that information is stated in a separate and detachable part.

(d) With respect to the limit for the embryo or fetus, the identifiers shall be of the declared pregnant woman.

(3) A licensee or registrant who makes a report under subsection (1) of this section shall submit the report, in writing, to the Manager of the Radiation Health Branch, Department for Health Services, 275 East Main Street, Frankfort, Kentucky 40621.

Section 41. Reports of Planned Special Exposures. (1) A licensee or registrant shall submit a written report to the Manager of the Radiation Health Branch, Department for Health Services, 275 East Main Street, Frankfort, Kentucky 40621, within thirty (30) days following a planned special exposure conducted in accordance with Section 7 of this administrative regulation.

(2) A licensee or registrant shall:

(a) Inform the Manager of the Radiation Health Branch that a planned special exposure was conducted;

(b) Indicate the date the planned special exposure occurred; and

(c) Provide the information required by Section 33 of this administrative regulation.

Section 42. Reports of Individual Monitoring. (1) This section shall apply to persons licensed or registered by the cabinet to:

(a) Possess or use sources of radiation for purposes of radiography authorized by 902 KAR 100:100;

(b) Receive radioactive waste from other persons for disposal pursuant to 902 KAR 100:022; or

(c) Possess or use, for processing or manufacturing for distribution required by 902 KAR 100:058, byproduct material in amounts exceeding one (1) of the following quantities:

	Quantity of Radionuclide[a] in curies
Cesium-137	1
Cobalt-60	1
Gold-198	100
Iodine-131	1
Iridium-192	10
Krypton-85	1,000
Promethium-147	10
Technetium-99m	1,000

[a]If necessary, the cabinet may require as a license or registration condition, KRS 211.842-211.852 or 902 KAR 100:015, Section 8, reports from licensees or registrants who are licensed or registered to use radionuclides not on this list, in quantities sufficient to cause comparable radiation levels.

(2) A licensee or registrant in a category listed in subsection (1) of this section shall:

(a) Submit an annual report of the results of individual monitoring carried out by the licensee for each individual for whom monitoring was required by Section 13 of this administrative regulation during that year; and

(b) Use Form NRC 5, Occupational Dose Record for a Monitoring Period, or other clear and legible record, which contains all the information required by Form NRC 5.

(3) A licensee or registrant may include additional data for individuals for whom monitoring may be provided, but not required.

(4) A licensee or registrant shall:

(a) File the report required by subsection (2) of this section covering the preceding year on or before April 30 of each year; and

(b) Submit the report to the Manager of the Radiation Health Branch, Department for Health Services, 275 East Main Street, Frankfort, Kentucky 40621.

Section 43. Protection Factors for Respirators. Protection factors shall be determined as established in 10 C.F.R. 20, Appendix A.

Section 44. Annual Limits on Intake (ALI) and Derived Air Concentrations (DAC) of radionuclides for occupational exposure, effluent concentrations, and concentrations for release to sanitary sewerage shall be determined as established in 10 C.F.R. 20, Appendix B.

Section 45. Material Incorporated by Reference. (1) The following material is incorporated by reference:

(a) "Cumulative Occupational Dose History", NRC Form 4, June 2011[~~1992~~];

(b) "Occupational Dose Record for a Monitoring Period", NRC Form 5, June 2011[~~1992~~]; and

(c) "Commodity Specification for Air", August 2004.

(2) This material may be inspected, copied, or obtained, subject to copyright law, at the Office of the Commissioner of

Public Health, 275 East Main Street, Frankfort, Kentucky 40621, 8 a.m. until 4:30 p.m., Monday through Friday.

STEPHANIE MAYFIELD GIBSON, MD, FCAP, Commissioner
AUDREY TAYSE HAYNES, Secretary
APPROVED BY AGENCY: September 11, 2014
FILED WITH LRC: September 15, 2014 at 11 a.m.
CONTACT PERSON: Tricia Orme, Office of Legal Services, 275 East Main Street 5 W-B, Frankfort, Kentucky 40601, phone 502-564-7905, fax 502-564-7573, email tricia.orme@ky.gov.

CABINET FOR HEALTH AND FAMILY SERVICES
Department for Public Health
Division of Public Health Protection and Safety
(As Amended at ARRS, December 9, 2014)

902 KAR 100:042. Decommissioning and financial surety.

RELATES TO: KRS 211.842-211.852, 211.990(4), 10 C.F.R. 20.1401-20.1406, 30, Appendices A-E, 30.35, 30.36, 40.36, 70.25, 15 U.S.C. 2B, 78m
STATUTORY AUTHORITY: KRS 194A.050, 211.090(3), 211.844
NECESSITY, FUNCTION, AND CONFORMITY: KRS 211.844 requires the Cabinet for Health and Family Services to regulate the possession or use of sources of ionizing or electronic product radiation and the handling and disposal of radioactive waste. This administrative regulation establishes requirements for decommissioning and financial assurance of radioactive material licensees.

Section 1. General Provisions and Scope. (1) This administrative regulation shall apply to the decommissioning and financial assurance requirements of a facility licensed under 902 KAR 100:040 or 100:022, as well as other facilities subject to the cabinet's jurisdiction under KRS 211.842 to 211.852. For a low-level waste disposal facility licensed pursuant to[~~under~~] 902 KAR 100:022, the criteria for decommissioning shall apply to only an ancillary surface facility that supports radioactive waste disposal activities.

(2) This administrative regulation shall not apply to a site that has:

(a) Been decommissioned prior to the effective date of this administrative regulation;

(b) Previously submitted and received cabinet approval on a license termination or decommissioning plan prior to the effective date of this administrative regulation; or

(c) Submitted a license termination or decommissioning plan with an application, as required by 902 KAR 100:040, Section 7.

(3) After a site has been decommissioned and the license terminated in accordance with this administrative regulation, the cabinet shall require additional cleanup if, based on new information, it determines that necessary criteria were not met and residual radioactivity at the site may result in significant threat to public health and safety.

(4) To calculate Total Effective Dose Equivalent (TEDE) to the average member of the critical group, the licensee shall determine the peak annual TEDE dose expected within the first 1,000 years after decommissioning.

Section 2. Radiological Criteria for Unrestricted Use. (1) A site shall be considered acceptable for unrestricted use if:

(a) The residual radioactivity that is distinguishable from background radiation results in a TEDE to an average member of the critical group that does not exceed twenty-five (25) millirem (0.25 mSv) per year, including radioactivity from groundwater sources of drinking water; and

(b) The residual radioactivity has been reduced to As Low as Reasonably Achievable (ALARA) levels.

(2) Determination of ALARA levels shall take into account every foreseeable potential detriment that may result from decontamination and waste disposal.

Section 3. Criteria for License Termination Under Restricted Conditions. The cabinet shall terminate a license under restricted conditions if one (1) or more of the following circumstances exist at the site:

(1) The licensee demonstrates that further reductions in residual radioactivity necessary to comply with Section 2 of this administrative regulation:

(a) May result in net public or environmental harm; or

(b) The residual levels associated with restricted conditions are ALARA. Determination of ALARA levels shall take into account every foreseeable potential detriment that may result from decontamination and waste disposal;

(2) The licensee has made provisions for legally enforceable institutional controls that provide reasonable assurance that the TEDE from residual radioactivity distinguishable from background to the average member of the critical group will not exceed twenty-five (25) mrem (0.25 mSv) per year;

(3) The licensee has provided sufficient financial assurance to enable an independent third party, including a governmental custodian of a site, to assume and carry out responsibilities for necessary control and maintenance of the site. Acceptable financial assurance mechanisms shall include:

(a) Funds placed into an account segregated from the licensee's assets and outside the licensee's administrative control, as ***established[~~described~~]*** in Section 15(2)(a) of this administrative regulation;

(b) Surety method, insurance, or other guarantee method as described in Section 15(2)(b) of this administrative regulation;

(c) For a federal, state, or local government licensee, a statement of intent as described in Section 15(2)(d) of this administrative regulation; or

(d) For a governmental entity assuming custody and ownership of a site, an arrangement deemed acceptable by the governmental entity.

(4) The licensee has submitted a decommissioning or license termination plan to the cabinet indicating the licensee's intent to decommission in accordance with Section 14(1) of this administrative regulation and specifying that the licensee intends to decommission by restricting use of the site. The licensee shall document in the plan how the advice of potentially affected individuals and institutions in the community has been sought, analyzed, and incorporated, as appropriate.

(a) A licensee proposing to decommission by restricting use of the site shall seek advice from potentially-affected parties ***if[~~, as follows~~]***:

1. ***[~~If~~]***Institutional controls proposed by the licensee:

a. ***Provide[~~Provides~~]*** reasonable assurance that the TEDE from residual radioactivity distinguishable from background to the average member of the critical group will not exceed twenty-five (25) mrem (0.25 mSv) TEDE per year;

b. Are enforceable; and

c. Will not impose undue burdens on the local community or other affected parties***; and[~~.~~]***

2. ***[~~If~~]***The licensee has provided sufficient financial assurance to enable an independent third party, including a governmental custodian of a site, to assume and carry out responsibilities for necessary control and maintenance of the site;

(b) In seeking advice on the issues identified in paragraph (a) of this subsection, the licensee shall provide for:

1. Participation by representatives of a broad cross section of potentially-affected community interests;

2. An opportunity for a comprehensive, collective discussion on the issues by the participants; and

3. A publicly available summary of the results of the discussions, including a description of the participants' viewpoints and the extent of agreement and disagreement among the participants; and

(5) Residual radioactivity at the site has been reduced so that if the institutional controls were no longer in effect, there is reasonable assurance that the TEDE from residual radioactivity distinguishable from background to the average member of the critical group is ALARA and shall not exceed:

(a) 100 mrem (1 mSv) per year; or

(b) 500 mrem (5 mSv) per year, if the licensee:

1. Demonstrates that further reductions in residual radioactivity necessary to comply with the value in subsection (5)(a) of this section are not technically achievable, are prohibitively expensive, or may result in net public or environmental harm;

2. Makes provisions for durable institutional controls;

3. Provides sufficient financial assurance to enable a responsible government entity or independent third party, including a governmental custodian of a site, to:

a. Carry out periodic rechecks of the site at least every five (5) years to assure that the institutional controls remain in place as necessary to meet the criteria established in subsection (2) of this section; and

b. Assume and carry out responsibilities for necessary control and maintenance of the institutional controls. Acceptable financial assurance mechanisms shall be as established in subsection (3) of this section.

Section 4. Alternate Criteria for License Termination. (1) The cabinet may terminate a license using alternate criteria greater than the dose criterion established in Sections 2 and 3(2) or (4)(a)1a of this administrative regulation, if the licensee:

(a) Submits an analysis of possible sources of exposure in support of assurance that:

1. Public health and safety continues to be protected; and

2. It is unlikely that the dose from manmade sources combined, other than medical, are more than the 100 mrem/year (1 mSv/y) limit of 902 KAR 100:019, Section 10(1)(a);

(b) Has employed restrictions on site use, to the extent practical, according to the provisions of Section 3 of this administrative regulation;

(c) Reduces doses to ALARA levels, taking into consideration potential detriments expected to result from decontamination and waste disposal; and

(d) Has submitted a decommissioning or license termination plan to the cabinet indicating the licensee's intent to decommission in accordance with Section 14(1) of this administrative regulation, and specifying that the licensee proposes to decommission by use of alternate criteria.

1. The licensee shall document in the plan how the advice of potentially-affected individuals and institutions in the community has been sought, analyzed, and addressed, as appropriate.

2. In seeking advice, the licensee shall provide for:

a. Participation by representatives of a broad cross section of potentially-affected community interests;

b. An opportunity for a comprehensive, collective discussion on the issues by the participants; and

c. A publicly available summary of the results of discussions, including a description of the participant's viewpoints and the extent of agreement and disagreement among the participants.

(2) The use of alternate criteria to terminate a license requires the approval of the cabinet, after consideration of recommendations that address comments provided by state and federal agencies and public comments submitted pursuant to Section 5 of this administrative regulation.

Section 5. Public Notification and Public Participation. Upon receipt of a license termination or decommissioning plan from the licensee, or a proposal by the licensee for release of a site pursuant to Section 3 or 4 of this administrative regulation, or if the cabinets determines a notice to be in the public interest, the cabinet shall:

(1) Notify and solicit comments from:

(a) Local and state governments in the vicinity of the site; and

(b) Other state and federal agencies, if the licensee proposes to release a site pursuant to Section 4 of this administrative regulation.

(2) Publish a notice to solicit comments from potentially affected parties. Publication shall be in a medium readily accessible to individuals in the vicinity of the site, and may be:

(a) Local newspaper;

(b) Letters to state and local organizations; or

(c) Other appropriate media.

Section 6. Minimization of Contamination. An applicant for a license or for an amendment in its entirety shall:

(1) Describe in the application how facility design and procedures for operation shall minimize contamination of the facility and the environment to the extent practicable;

(2) Facilitate eventual decommissioning; and

(3) Minimize the generation of radioactive waste, to the extent practicable.

Section 7. Criteria Relating to Use of Financial Tests and Parent Company Guarantees for Providing Reasonable Assurance of Funds for Decommissioning. (1) An applicant or licensee shall provide reasonable assurance of the availability of funds for decommissioning based upon:

(a) Obtaining a parent company to guarantee the availability of funds for decommissioning costs; and

(b) A demonstration that the parent company meets financial requirements.

(2) Financial test.

(a) To pass the financial test, the parent company shall meet one (1) of the following criteria:

1. The parent company shall have:

a. Two (2) of the following three (3) ratios:

(i) A ratio of total liabilities to net worth less than two (2);

(ii) A ratio of the sum of net income plus depreciation, depletion, and amortization to total liabilities greater than one-tenth (0.1); or

(iii) A ratio of current assets to current liabilities greater than one and five-tenths (1.5);

b. Net working capital and tangible net worth each at least six (6) times the current decommissioning cost estimates for the total of facilities or parts of the facilities, or prescribed amount if a certification is used;

c. Tangible net worth of at least $10,000,000; and

d. Assets located in the United States amounting to at least ninety (90) percent of the total assets or at least six (6) times the current decommissioning cost estimates for the total of facilities or parts of the facilities, or prescribed amount if a certification is used; or

2. The parent company shall have:

a. A current rating for its most recent bond issuance of AAA, AA, A, or BBB as issued by Standard and Poor's, or AAA, AA, A, or BAA as issued by Moody's;

b. Tangible net worth each at least six (6) times the current decommissioning cost estimates for the total of facilities or parts of the facilities, or prescribed amount if a certification is used;

c. Tangible net worth of at least $10,000,000; and

d. Assets located in the United States amounting to at least ninety (90) percent of the total assets or at least six (6) times the current decommissioning cost estimates for the total of facilities or parts of the facilities, or prescribed amount if a certification is used; or

(b) The parent company's independent certified public accountant shall compare the data used by the parent company in the financial test, which shall be derived from the independently audited, year-end financial statements for the latest fiscal year, with the amounts in the financial statement. The licensee shall inform the cabinet, within ninety (90) days, of matters coming to the auditor's attention that cause the auditor to believe that:

1. The data specified in the financial test requires adjustment; and

2. The company no longer passes the test.

(c)1. After the initial financial test, the parent company shall repeat the passage of the test within ninety (90) days after the close of each succeeding fiscal year.

2.a. If the parent company no longer meets the requirements of subsection (2)(a) of this section, the licensee shall notify the cabinet of its intent to establish alternate financial assurance.

b. The notice shall be sent by certified mail within ninety (90) days after the end of the fiscal year for which the year-end financial data show that the parent company no longer meets the financial

test requirements.

c. The licensee shall provide alternate financial assurance within 120 days after the end of a fiscal year.

(3) Parent company guarantee. The terms of a parent company guarantee that an applicant or licensee obtains shall provide that:

(a) The parent company guarantee shall remain in force unless the guarantor notifies the licensee and the cabinet, by certified mail, return receipt requested, of cancellation. Cancellation shall not occur during the 120 days beginning on the date of receipt of the notice of cancellation as evidenced by the return receipts.

(b) If the licensee fails to provide sufficient alternate financial assurance within ninety (90) days after receipt by the licensee and cabinet of a notice of cancellation of the parent company guarantee from the guarantor, the guarantor shall provide an alternative financial assurance in the name of the licensee.

(c) The parent company guarantee and financial test provisions shall remain in effect until the cabinet has terminated the license.

(d) If a trust is established for decommissioning costs, the trustee and trust shall be acceptable to the cabinet. An acceptable trustee shall include an appropriate state or federal government agency or an entity that has the authority to act as a trustee and whose trust operations are regulated and examined by a federal or state agency.

Section 8. Criteria Relating to Use of Financial Tests and Self-guarantees for Providing Reasonable Assurance of Funds for Decommissioning. (1) An applicant or licensee may provide reasonable assurance of the availability of funds for decommissioning based upon:

(a) Furnishing its own guarantee of funds available for decommissioning costs pursuant to subsection (3) of this section; and

(b) A demonstration that the company passes the financial test established in subsection (2) of this section.

(2) Financial test.

(a) To pass the financial test, a company shall meet the following criteria:

1. Tangible net worth shall be at least ten (10) times the total current decommissioning cost estimate for the total of facilities or parts of the facilities or the current amount required if certification is used.

2. Assets located in the United States shall amount to at least ninety (90) percent of total assets or at least ten (10) times the total current decommissioning cost estimate for the total of facilities or parts of the facilities or the current amount required if certification is used.

3. A current rating for its most recent bond issuance of AAA, AA, or A as issued by Standard and Poor's, or Aaa, Aa, or A as issued by Moody's.

(b) To pass the financial test, a company shall meet the following additional requirements:

1. The company shall have at least one (1) class of equity securities registered pursuant to 15 U.S.C. 2B.

2. The company's independent certified public accountant shall compare the data used by the company in the financial test, which shall be derived from the independently audited, year-end financial statements for the latest fiscal year, with the amounts in the financial statement. The licensee shall inform the cabinet, within ninety (90) days, of matters coming to the attention of the auditor that cause the auditor to believe that:

a. The data specified in the financial test requires adjustment; and

b. The company no longer passes the test.

3. After the initial financial test, the company shall repeat passage of the test within ninety (90) days after the close of each succeeding fiscal year.

(c) If the licensee no longer meets the requirements of paragraph (a) of this subsection, the licensee shall notify the cabinet immediately of ***the licensee's***~~[its]~~ intent to establish alternate financial assurance within 120 days of the notice.

(3) Company self-guarantee. The terms of a self-guarantee that an applicant or licensee furnishes shall provide that:

(a) The guarantee shall remain in force unless the licensee sends notice of cancellation by certified mail, return receipt requested, to the cabinet. Cancellation shall not occur during the 120 days beginning on the date of receipt of the notice of cancellation by the cabinet, as evidenced by the return receipt.

(b) The licensee shall provide alternative financial assurance as specified in 902 KAR Chapter 100 within ninety (90) days following receipt by the cabinet of a notice of cancellation of the guarantee.

(c) The guarantee and financial test provisions shall remain in effect until the cabinet has terminated the license or until another financial assurance method acceptable to the cabinet has been put into effect by the licensee.

(d) The licensee shall promptly forward to the cabinet and the licensee's independent auditor the reports covering the latest fiscal year filed by the licensee with the Securities and Exchange Commission pursuant to the requirements of 15 U.S.C. 78m.

(e) If the licensee's most recent bond issuance ceases to be rated "A" or above by either Standard and Poor's or Moody's, the licensee shall notify to the cabinet, in writing, within twenty (20) days after publication of the change by the rating service. If the licensee's most recent bond issuance ceases to be rated "A" or above by both Standard and Poor's and Moody's, the licensee shall no longer meet the requirements of subsection (2)(a) of this section.

(f) An applicant or licensee shall provide to the cabinet a written commitment by a corporate officer stating that the licensee shall fund and carry out the required decommissioning activities or, upon issuance of an order by the cabinet, the licensee shall set up and fund a trust in the amount of the current cost estimates for decommissioning.

Section 9. Criteria Relating To Use of Financial Tests and Self-guarantee for Providing Reasonable Assurance of Funds for Decommissioning by Commercial Companies that Have No Outstanding Rated Bonds. (1) An applicant or licensee may provide reasonable assurance of the availability of funds for decommissioning based upon:

(a) Furnishing its own guarantee of the availability of funds for decommissioning costs pursuant to subsection (3) of this section; and

(b) A demonstration that the company passes the financial test established in subsection (2) of this section.

(2) Financial test.

(a) To pass the financial test a company shall meet the following criteria:

1. Tangible net worth greater than $10,000,000, or at least ten (10) times the total current decommissioning cost estimate, or the current amount required if certification is used, whichever is greater, for decommissioning activities for which the company is responsible as self-guaranteeing licensee and as parent-guarantor.

2. Assets located in the United States amounting to at least ninety (90) percent of total assets or at least ten (10) times the total current decommissioning cost estimate, or the current amount required if certification is used for decommissioning activities for which the company is responsible as self-guaranteeing licensee and as parent-guarantor.

3. A ratio of cash flow divided by total liabilities greater than 0.15 and a ratio of total liabilities divided by net worth less than one and five-tenths (1.5).

(b) A company shall also meet the following financial requirements:

1. The company's independent certified public accountant shall compare the data used by the company in the financial test, which shall be derived from the independently audited year-end financial statement based on United States generally accepted accounting practices, for the latest fiscal year with the amounts in the financial statement. The licensee shall inform the cabinet within ninety (90) days of matters that cause the auditor to believe that:

a. The data specified in the financial test requires adjustment; and

b. The company no longer passes the test.

2. After the initial financial test, the company shall repeat

passage of the test within ninety (90) days after the close of each succeeding fiscal year.

3.a. If the licensee no longer meets the requirements of paragraph (a) of this subsection, the licensee shall notify the cabinet of intent to establish alternative financial assurance.

b. The notice shall be sent by certified mail, return receipt requested, within ninety (90) days after the end of the fiscal year for which the year-end financial data show that the licensee no longer meets the financial test requirements.

c. The licensee shall provide alternative financial assurance within 120 days after the end of the fiscal year.

(3) Company self-guarantee. The terms of a self-guarantee which an applicant or licensee furnishes shall provide that:

(a) The guarantee shall remain in force unless the licensee sends notice of cancellation by certified mail, return receipt requested, to the cabinet. Cancellation shall not occur until an alternative financial assurance mechanism is in place***;[.]***

(b) The licensee shall provide alternative financial assurance, as specified in this administrative regulation, within ninety (90) days following receipt by the cabinet of a notice of cancellation of the guarantee***;[.]***

(c) The guarantee and financial test provisions shall remain in effect until the cabinet has terminated the license or until another financial assurance method acceptable to the cabinet has been put into effect by the licensee***; and[.]***

(d) An applicant or licensee shall provide to the cabinet a written commitment by a corporate officer stating that the licensee shall fund and carry out the required decommissioning activities or, upon issuance of an order by the cabinet, the licensee shall set up and fund a trust in the amount of the current cost estimates for decommissioning.

Section 10. Criteria Relating to Use of Financial Tests and Self-guarantee for Providing Reasonable Assurance of Funds for Decommissioning by Nonprofit Colleges, Universities, and Hospitals. (1) An applicant or licensee may provide reasonable assurance of the availability of funds for decommissioning based upon:

(a) Furnishing its own guarantee of the availability of funds for decommissioning costs; and

(b) A demonstration that the applicant or licensee passes the financial test established in subsection (2) of this section.

(2) Financial test.

(a) A college or university shall meet either of the following criteria:

1. For an applicant or licensee that issues bonds, a current rating for its most recent uninsured, uncollateralized, and unencumbered bond issuance of AAA, AA, or A as issued by Standard and Poor's, or Aaa, Aa, or A as issued by Moody's***; or[.]***

2. For an applicant or licensee that does not issue bonds, unrestricted endowment consisting of assets located in the United States of at least $50,000,000, or at least thirty (30) times the total current decommissioning cost estimate, or the current amount required if certification is used, whichever is greater, for decommissioning activities for which the college or university is responsible as a self-guaranteeing licensee.

(b) A hospital shall meet the following criteria:

1. For an applicant or licensee that issues bonds, a current rating for its most recent uninsured, uncollateralized, and unencumbered bond issuance of AAA, AA, or A as issued by Standard and Poor's, or Aaa, Aa, or A as issued by Moody's; or

2. For an applicant or licensee that does not issue bonds:

a. The result of total revenues minus total expenditures divided by total revenues shall be equal to or greater than 0.04;

b. Long term debt divided by net fixed assets shall be less than or equal to 0.67;

c. The sum of current assets plus depreciation funds, divided by current liabilities, shall be greater than or equal to 2.55; and

d. Operating revenues shall be at least 100 times the total current decommissioning cost estimate, or the current amount required if certification is used, for decommissioning activities for which the hospital is responsible as a self-guaranteeing license.

(c) A licensee shall meet the ***requirements established in subparagraphs 1. through 3. of this paragraph.[~~following requirements:~~]***

1. A licensee's independent certified public accountant shall compare the data used by the licensee in the financial test, which shall be derived from the independently audited year-end financial statements, based on United States generally accepted accounting practices, for the latest fiscal year, with the amounts in the financial statement. The licensee shall inform the cabinet, within ninety (90) days, of matters coming to the attention of the auditor that cause the auditor to believe that:

a. The data specified in the financial test requires adjustment; and

b. The licensee no longer passes the test.

2. After the initial financial test, a licensee shall repeat passage of the test within ninety (90) days after the close of each succeeding fiscal year.

3. If a licensee no longer meets the requirements of subsection (1) of this section, the licensee shall notify the cabinet of its intent to establish alternative financial assurance. The notice shall be sent by certified mail, return receipt requested, within ninety (90) days after the end of the fiscal year for which the year-end financial data show that the licensee no longer meets the financial test requirements. The licensee shall provide alternate financial assurance within 120 days after the end of the fiscal year.

(3) Self-guarantee. The terms of a self-guarantee that an applicant or licensee furnishes shall provide that:

(a) The guarantee shall remain in force unless the licensee sends notice of cancellation by certified mail, return receipt requested, to the cabinet. Cancellation shall not occur unless an alternative financial assurance mechanism is in place.

(b) The licensee shall provide alternative financial assurance, as specified in this administrative regulation, within ninety (90) days following receipt by the cabinet of a notice of cancellation of the guarantee.

(c) The guarantee and financial test provisions shall remain in effect until the cabinet has terminated the license or until another financial assurance method acceptable to the cabinet has been put into effect by the licensee.

(d) An applicant or licensee shall provide to the cabinet a written commitment by a corporate officer or officer of the institution stating that the licensee shall:

1. Fund and carry out the required decommissioning activities; or

2. Upon issuance of an order by the cabinet, set up and fund a trust in the amount of current cost estimates for decommissioning.

(e) If the licensee's most recent bond issuance ceases to be rated "A" or above by either Standard and Poor's or Moody's, the licensee shall notify the cabinet, in writing, within twenty (20) days after publication of the change by the rating service.

Section 11. Financial Assurance and Recordkeeping for Decommissioning for Radioactive Material. (1)(a) An applicant for a specific license authorizing the possession and use of unsealed radioactive material of half-life greater than 120 days and in quantities exceeding 10^5 times the applicable quantities in Section 16 of this administrative regulation shall submit a decommissioning funding plan as ***established[~~described~~]*** in Section 15(1) of this administrative regulation.

(b) A decommissioning funding plan shall also be submitted if a combination of isotopes is involved, and if R divided by 10^5 is greater than one (1) (known as the "unity rule"), where R is defined as the sum of the ratios of the quantity of an isotope to the applicable value in Section 16 of this administrative regulation.

(c) A holder of, or applicant for, a specific license authorizing the possession and use of sealed sources or plated foils of half-life greater than 120 days and in quantities exceeding 10^{12} times the applicable quantities in Section 16, or if a combination of isotopes is involved if R, divided by 10^{12} is greater than one (1) (known as the "unity rule"), where R is defined as the sum or the ratios of the quantity of an isotope to the applicable value in Section 16 of this administrative regulation, shall submit a decommissioning funding plan as described in Section 15(1) of this administrative regulation.

(2) An applicant for a specific license authorizing possession

and use of radioactive material of half-life greater than 120 days and in quantities specified in subsection (4) of this section shall:

(a) Submit a decommissioning funding plan as ***established[~~described~~]*** in Section 15(1) of this administrative regulation; or

(b) Submit a certification that financial assurance for decommissioning has been provided in the amount ***established[~~prescribed~~]*** by subsection (4) of this section, using one (1) of the methods ***established[~~described~~]*** in Section 15 of this administrative regulation. For an applicant, the certification may state that the appropriate assurance shall be obtained after the application has been approved and the license issued, but before the receipt of licensed material. If an applicant defers execution of the financial instrument until after the license has been issued, a signed original of the financial instrument obtained to satisfy the requirements of Section 15 of this administrative regulation shall be submitted to the cabinet before receipt of licensed material. If an applicant does not defer execution of the financial instrument, the applicant shall submit to the cabinet, as part of the certification, a signed original of the financial instrument obtained to satisfy the requirements of Section 15 of this administrative regulation.

(3)(a) A holder of a specific license of a type described in subsection (1) or (2) of this section, shall provide financial assurance for decommissioning in accordance with the criteria established in this section.

(b) A holder of a specific license of a type described in subsection (1) of this section shall submit a decommissioning funding plan as ***established[~~described~~]*** in Section 15(1) of this administrative regulation or a certification of financial assurance for decommissioning in an amount at least equal to $1,125,000 in accordance with the criteria established in this section. If a licensee submits a certification of financial assurance rather than a decommissioning funding plan, the licensee shall include a decommissioning funding plan in an application for license renewal.

(c) A holder of a specific license of a type described in subsection (2) of this section shall submit a decommissioning funding plan as described in Section 15 of this administrative regulation, or a certification of financial assurance for decommissioning in accordance with the criteria established in this section.

(d) A waste collector or waste processor, as defined in 902 KAR 100:010, shall provide financial assurance in an amount based on a decommissioning funding plan as ***established[~~described~~]*** in Section 15 of this administrative regulation. The decommissioning funding plan shall include the cost of disposal of the maximum amount (curies) of radioactive material permitted by the license, and the cost of disposal of the maximum quantity, by volume, of radioactive material that could be present at the licensee's facility at any time, in addition to the cost to remediate the licensee's site to meet the license termination criteria of 902 KAR 100:019. The decommissioning funding plan shall be submitted by December 3, 2006.

(4) The following is a list of required amounts of financial assurance for decommissioning, listed by quantity of radioactive material:

(a) Greater than 10^4 but less than or equal to 10^5 times the applicable quantities established in Section 16 of this administrative regulation, in unsealed form. For a combination of isotopes, if R, as defined in subsection (1) of this section, divided by 10^4 is greater than one (1) but R divided by 10^5 is less than or equal to one (1), the amount shall be $1,125,000.

(b) Greater than 10^3 but less than or equal to 10^4 times the applicable quantities established in Section 16 of this administrative regulation, in unsealed form. For a combination of isotopes, if R, as defined in subsection (1) of this section, divided by 10^3 is greater than one (1) but R divided by 10^4 is less than or equal to one (1), the amount shall be $225,000.

(c) Greater than 10^{10} but less than or equal to 10^{12} times the applicable quantities established in Section 16 of this administrative regulation, in sealed sources or plated foils. For a combination of isotopes, if R, as defined in subsection (1) of this section, divided by 10^{10} is greater than one (1), the amount shall be $113,000.

(d)1. A licensee required to submit the $1,125,000 amount shall do so by June 30, 2010.

2. A licensee required to submit the $113,000 or $225,000 amount shall do so
by June 30, 2010.

3. A licensee having possession limits exceeding the upper bounds of this list shall base financial assurance on a decommissioning funding plan.

Section 12. Financial Assurance and Recordkeeping for Decommissioning for Source Material. Criteria for providing financial assurance for decommissioning, except for licenses authorizing the receipt, possession, and use of source material for uranium or thorium milling, or radioactive material at sites formerly associated with such milling, shall be as ***established in subsections (1) and (2) of this section.[~~follows:~~]***

(1) An applicant for a specific license authorizing the possession and use of more than 100 millicuries (mCi) of source material in a readily dispersible form shall submit a decommissioning funding plan as described in Section 15(1) of this administrative regulation.

(2) An applicant for a specific license authorizing possession and use of quantities of source material greater than ten (10) millicuries (mCi) but less than or equal to 100 millicuries (mCi) in a readily dispersible form shall submit:

(a) A decommissioning funding plan as ***established[~~described~~]*** in Section 15(1) of this administrative regulation; or

(b) A certification that financial assurance for decommissioning has been provided in the amount of $225,000 using one (1) of the methods described in Section 15 of this administrative regulation.

1. The certification may state that the appropriate assurance shall be obtained after the application has been approved and the license issued, but before the receipt of licensed material.

2. If an applicant defers execution of the financial instrument until after the license has been issued, a signed original of the financial instrument obtained to satisfy the requirements of Section 15 of this administrative regulation shall be submitted to the cabinet prior to receipt of licensed material.

3. If an applicant does not defer execution of the financial instrument, the applicant shall submit to the cabinet, as part of the certification, a signed original of the financial instrument obtained to satisfy the requirements of Section 15 of this administrative regulation.

(c)1. A holder of a specific license covered by subsection (1) of this section or by this subsection, shall provide financial assurance for decommissioning in accordance with the criteria established in this section.

2. A holder of a specific license of a type described in subsection (1) of this section shall submit a decommissioning funding plan as ***established[~~described~~]*** in Section 15(1) of this administrative regulation, or a certification of financial assurance for decommissioning in an amount at least equal to $1,125,000, in accordance with the criteria in this section. If the licensee submits the certification of financial assurance rather than a decommissioning funding plan, the licensee shall include a decommissioning funding plan in an application for license renewal.

3. A holder of a specific license of a type ***established[~~described~~]*** in this subsection shall submit a decommissioning funding plan, as described in Section 15(1) of this administrative regulation, or a certification of financial assurance for decommissioning in accordance with the criteria established in this section.

Section 13. Financial Assurance and Recordkeeping for Decommissioning for Special Nuclear Material. (1)(a) An applicant for a specific license of the type authorizing the possession and use of unsealed nuclear material in quantities exceeding 10^5 times the applicable quantity established in Section 16 of this administrative regulation shall submit a decommissioning funding

plan as ***established[~~described~~]*** in Section 15(1) of this administrative regulation.

(b) A decommissioning funding plan shall be submitted if a combination of isotopes is involved, and if R divided by 10^5 is greater than one (1) (known as the "unity rule"), where R is the sum of the ratios of the quantity of each isotope to the applicable value in Section 16 of this administrative regulation.

(2) An applicant for a specific license authorizing possession and use of unsealed special nuclear material in quantities specified in subsection (4) of this section, shall submit:

(a) A decommissioning funding plan as described in Section 15(1) of this administrative regulation; or

(b) A certification that financial assurance for decommissioning has been provided in an amount established in subsection (4) of this section, using one (1) of the methods ***established[~~described~~]*** in Section 15 of this administrative regulation.

1. The certification may state that the appropriate assurance shall be obtained after the application has been approved and the license issued, but before the receipt of licensed material.

2. If an applicant defers execution of the financial instrument until after the license has been issued, a signed original of the financial instrument obtained to satisfy the requirements of Section 15 of this administrative regulation shall be submitted to the cabinet before receipt of licensed material.

3. If an applicant does not defer execution of the financial instrument, the applicant shall submit to the cabinet, as part of the certification, a signed original of the financial instrument obtained to satisfy the requirements of Section 15 of this administrative regulation.

(3)(a) A holder of a specific license that is of a type ***established[~~described~~]*** in subsection (1) of this section, shall provide financial assurance for decommissioning in accordance with the criteria established in this section.

(b) A holder of a specific license of a type ***established[~~described~~]*** in subsection (1) of this section shall submit a decommissioning funding plan as ***established[~~described~~]*** in Section 15(1) of this administrative regulation, or a certification of financial assurance for decommissioning in an amount at least equal to $1,125,000, in accordance with the criteria established in this section. If the licensee submits the certification of financial assurance rather than a decommissioning funding plan, the licensee shall include a decommissioning funding plan in an application for license renewal.

(c) Each holder of a specific license of a type ***established[~~described~~]*** in subsection (1) of this section shall submit:

1. A decommissioning funding plan, ***established[~~described~~]*** in Section 15(1) of this administrative regulation; or

2. A certification of financial assurance for decommissioning, in accordance with the criteria established in this section.

(4) ***[~~The following is a table of~~]***Required amounts of financial assurance for decommissioning, listed by quantity of material:

(a) Greater than 10^4 but less than or equal to 10^5 times the applicable quantities established in Section 16 of this administrative regulation. For a combination of isotopes, if R, as defined in subsection (1) of this section, divided by 10^4 is greater than one (1) but R divided by 10^5 is less than or equal to one (1), the amount shall be
$1,125,000.

(b) Greater than 10^3 but less than or equal to 10^4 times the applicable quantities established in Section 16 of this administrative regulation. For a combination of isotopes, if R, as defined in subsection (1) of this section, divided by 10^3 is greater than one (1) but R divided by 10^4 is less than or equal to one (1), the amount shall be $225,000.

(c) A licensee having possession limits exceeding the upper bounds of this section shall base financial assurance on a decommissioning funding plan.

Section 14. Expiration and Termination of Licenses and Decommissioning of Sites and Separate Buildings or Outdoor Areas. (1) Within sixty (60) days of the occurrence one (1) of the following events, a licensee shall notify the cabinet in writing and shall either begin decommissioning ***the licensee's[~~its~~]*** site, separate building, or outdoor area containing residual radioactivity, so that the building or outdoor area is suitable for release in accordance with cabinet requirements established in this administrative regulation, or shall submit within twelve (12) months of notification a decommissioning plan, if required by subsection (4)(a) of this section, and shall begin decommissioning upon approval of that plan if:

(a) The license has expired pursuant to 902 KAR 100:040, Section 7;

(b) The licensee has decided to permanently cease principal activities, as established in this section, at the entire site, in a separate building or outdoor area that contains residual radioactivity, so that the building or outdoor area is unsuitable for release in accordance with cabinet requirements established in this administrative regulation;

(c) Principal activities under the license have not been conducted for a period of twenty-four (24) months; or

(d) Principal activities have not been conducted for a period of twenty-four (24) months in a separate building or outdoor area that contains residual radioactivity, so that the building or outdoor area is unsuitable for release in accordance with cabinet requirements.

(2) Coincident with the notification required by subsection (1) of this section, the licensee shall maintain in effect all decommissioning financial assurances established by the licensee pursuant to Sections 11, 12, and 13 of this administrative regulation in conjunction with a license issuance or renewal or as required by this section. The amount of the financial assurance shall be increased or decreased, as appropriate, to cover the detailed cost estimate for decommissioning established pursuant to subsection (4)(d)5 of this section.

(a) A licensee who has not provided financial assurance to cover the detailed cost estimate submitted with the decommissioning plan shall do so within one year (1) after the effective date of this administrative regulation.

(b) Following approval of the decommissioning plan, and with cabinet approval, a licensee may reduce the amount of the financial assurance as decommissioning proceeds and radiological contamination is reduced at the site.

(3)(a) The cabinet may grant a request to extend the time periods established in this section if the cabinet determines that an extension is not detrimental to public health or safety and is in the public interest.

(b) The request shall be submitted at least thirty (30) days before the notification required by subsection (1) of this section.

(c) The schedule for decommissioning established in subsection (1) of this section shall not commence until the cabinet has made a determination on the request.

(4)(a) A decommissioning plan shall be submitted if required by a license condition or if the procedures and activities necessary to carry out decommissioning of the site, a separate building, or outdoor area have not been approved by the cabinet previously, and the decommissioning procedures may increase potential risk to the health or safety of workers or to the public, as in***[~~the following cases~~]***:

1. Procedures involving techniques not applied routinely during cleanup or maintenance operations;

2. Workers entering areas not normally occupied where surface contamination and radiation levels are significantly higher than routinely encountered during operation;

3. Procedures potentially resulting in significantly greater airborne concentrations of radioactive materials than are present during operation; or

4. Procedures potentially resulting in significantly greater releases of radioactive material to the environment than those associated with operation.

(b) The cabinet may approve an alternate schedule for submittal of a decommissioning plan required pursuant to subsection (1) of this section if the cabinet determines that the alternative schedule is necessary to the effective conduct of decommissioning operations and presents no undue risk from radiation to public health or safety, and is in the public interest.

(c) A procedure with a potential health or safety impact, including a procedure listed in paragraph (a) of this subsection, shall not be carried out prior to approval of the decommissioning plan.

(d) A proposed decommissioning plan for a site, separate building, or outdoor area shall include:

1. A description of the conditions of the site, separate building, or outdoor area sufficient to evaluate the acceptability of the plan;

2. A description of planned decommissioning activities;

3. A description of methods used to ensure protection of workers and the environment against radiation hazards during decommissioning;

4. A description of the planned final radiation survey;

5. An updated detailed cost estimate for decommissioning, comparison of that estimate with present funds set aside for decommissioning, and a plan for assuring the availability of adequate funds for completion of decommissioning; and

6. For decommissioning plans calling for completion of decommissioning later than twenty-four (24) months after plan approval, a justification for the delay based on the criteria in subsection (6) of this section.

(e) The proposed decommissioning plan shall be approved by the cabinet if the information demonstrates completion as soon as practicable and adequate protection for the health and safety of workers and the public.

(5)(a) A licensee shall complete decommissioning of the site, separate building, or outdoor area as soon as practicable, but within twenty-four (24) months following the initiation of decommissioning, except as provided in subsection (6) of this section.

(b) If decommissioning involves the entire site, the licensee shall request license termination as soon as practicable, but within twenty-four (24) months following the initiation of decommissioning, except as provided in subsection (6) of this section.

(6) The cabinet shall approve a request for an alternative schedule for completion of decommissioning of the site, separate building, or outdoor area, and license termination if appropriate, if the cabinet determines that the alternative is warranted by consideration of***[the following]***:

(a) If it is technically feasible to complete decommissioning within the allotted twenty-four (24) month period;

(b) If sufficient waste disposal capacity is available to allow completion of decommissioning within the allotted twenty-four (24) month period;

(c) If a significant volume reduction in wastes requiring disposal can be achieved by allowing short-lived radionuclides to decay;

(d) If a significant reduction in radiation exposure to workers can be achieved by allowing short-lived radionuclides to decay; and

(e) Other site-specific factors, such as the regulatory requirements of other government agencies, lawsuits, groundwater treatment activities, monitored natural groundwater restoration, actions that may result in more environmental harm than deferred cleanup, and other factors beyond the control of the licensee.

(7) As the final step in decommissioning, the licensee shall:

(a) Certify the disposition of all licensed material, including accumulated wastes, by submitting a completed cabinet Form RPS-10, incorporated by reference in 902 KAR 100:040, or equivalent information; and

(b) Conduct a radiation survey of the premises where the licensed activities were carried out and submit a report of the results of this survey, unless the licensee demonstrates in some other manner that the premises are suitable for release in accordance with the criteria for decommissioning established in Sections 1 through 6 of this administrative regulation. The licensee shall, as appropriate:

1. Report levels:

a. Of gamma radiation in units of microroentgen (μR) (millisieverts, mSv) per hour at one (1) meter from surfaces;

b. Of radioactivity, including alpha and beta, in units of disintegrations per minute, microcuries (megabecquerels) per 100 square centimeters removable and fixed radiation for surfaces;

c. Microcuries (megabecquerels) per milliliter for water; and

d. Picocuries (Becquerels) per gram for solids such as soils or concrete; and

2. Specify the survey instruments used and certify that each instrument is properly calibrated and tested.

(8) Specific licenses, including expired licenses, shall be terminated by written notice to the licensee if the cabinet determines that:

(a)***1.*** Radioactive material has been properly disposed of;

2.[(b)] Reasonable effort has been made to eliminate residual radioactive contamination, if present; and

3.a.[(c)] A radiation survey has been performed that demonstrates that the premises are suitable for release in accordance with the criteria for decommissioning established in Sections 1 through 6 of this administrative regulation; ***or***

b.[(d)] Other information submitted by the licensee is sufficient to demonstrate that the premises are suitable for release in accordance with the criteria for decommissioning established in Sections 1 through 6 of this administrative regulation; or

(b)[(e)] Records required by 902 KAR 100:040, Section 7(3)(e), and Section 15(3) of this administrative regulation have been received.

Section 15. Financial Assurance Methods. (1) A decommissioning funding plan shall contain a cost estimate for decommissioning and a description of the method of assuring funds for decommissioning from subsection (2) of this section, including means for adjusting cost estimates and associated funding levels periodically over the life of the facility. Cost estimates shall be adjusted at intervals not to exceed three (3) years. The decommissioning funding plan shall also contain:

(a) A certification by the licensee that financial assurance for decommissioning has been provided in the amount of the cost estimate for decommissioning; and

(b) A signed original of the financial instrument obtained to satisfy the requirements of subsection (2) of this section.

(2) Financial assurance for decommissioning shall be provided by one (1) or more of the following methods:

(a) A prepayment deposited prior to the start of operation into an account segregated from licensee assets and outside the licensee's administrative control of cash or liquid assets so that the amount of funds may be sufficient to pay decommissioning costs. Prepayment shall be in the form of a trust, escrow account, government fund, certificate of deposit, or deposit of government securities.

(b) A surety method, insurance, or other guarantee method.

1. These methods guarantee that decommissioning costs shall be paid.

2. A surety method shall be in the form of a surety bond, letter of credit, or line of credit.

3. A parent company guarantee of funds for decommissioning costs based on a financial test may be used if the guarantee and test are as contained in Section 7 of this administrative regulation.

4. A parent company guarantee shall not be used in combination with another financial method to satisfy the requirements of this section.

5. For commercial corporations that issue bonds, a guarantee of funds by the applicant or licensee for decommissioning costs based on a financial test may be used. If used, the guarantee and test shall be in accordance with Section 8 of this administrative regulation.

6. For commercial companies that do not issue bonds, a guarantee of funds by the applicant or licensee for decommissioning costs may be used if the guarantee and test are in accordance with Section 9 of this administrative regulation.

7. For nonprofit entities, such as colleges, universities, and nonprofit hospitals, a guarantee of funds by the applicant or licensee may be used if the guarantee and test are in accordance with Section 10 of this administrative regulation.

8. A guarantee by the applicant or licensee shall not be used in combination with another financial method used to satisfy the requirements of this section, or in a situation in which the applicant or licensee has a parent company holding majority control of the

voting stock of the company.

9. A surety method, or insurance used to provide financial assurance for decommissioning, shall contain the following conditions:

a. The surety method or insurance shall be open-ended or, if written for a specified term, shall be renewed automatically unless the issuer notifies the cabinet, the beneficiary, and the licensee at least ninety (90) days prior to the renewal date of its intention not to renew. The surety method or insurance shall provide that the full face amount be paid to the beneficiary automatically, prior to expiration, without proof of forfeiture, if the licensee fails to provide a replacement acceptable to the cabinet within thirty (30) days after receipt of notification of cancellation.

b. The surety method or insurance shall be payable to a trust established for decommissioning costs. The trustee and trust shall be acceptable to the cabinet. An acceptable trustee shall include an appropriate state or federal government agency or an entity that has the authority to act as a trustee, and whose trust operations are regulated and examined by a federal or state agency.

c. The surety method or insurance shall remain in effect until the cabinet has terminated the license.

(c) An external sinking fund in which deposits are made at least annually, coupled with a surety method or insurance, the value of which may decrease by the amount being accumulated in the sinking fund.

1. An external sinking fund shall be a fund established and maintained by setting aside funds periodically in an account segregated from licensee assets and outside the licensee's administrative control, in which the total amount of funds may be sufficient to pay decommissioning costs at the time termination of operation is expected.

2. An external sinking fund shall be in the form of a trust, escrow account, government fund, certificate of deposit, or deposit of government securities.

3. The surety or insurance provisions shall be as stated in subsection (2)(b) of this section.

(d) For a federal, state, or local government licensee, a statement of intent containing a cost estimate for decommissioning or an amount based on the tables in Sections 11, 12, and 13 of this administrative regulation and indicating that funds for decommissioning shall be obtained as necessary.

(e) If a governmental entity is assuming custody and ownership of a site, an arrangement that is deemed acceptable by the governmental entity.

(3)(a) Each person licensed pursuant to[~~under~~] 902 KAR 100:040 shall keep records of information pertinent to the decommissioning of a facility in an identified location until the site is released for unrestricted use.

(b) Before licensed activities shall be transferred or assigned in accordance with 902 KAR 100:040, Section 6, a licensee shall transfer the records ***established[~~described~~]*** in this subsection to the new licensee.

(c) The new licensee shall be responsible for maintaining these records until the license is terminated.

(d) If records pertinent to the decommissioning of a facility are kept for other purposes, reference to the records and their locations shall be used.

(e) Information the cabinet considers pertinent to decommissioning shall consist of:

1. Records of spills or other unusual occurrences involving the spread of contamination in and around the facility, equipment, or site.

a. The records may be limited to instances in which contamination remains after a cleanup procedure or if there is reasonable likelihood that contaminants may have spread to inaccessible areas as in the case of possible seepage into porous materials such as concrete.

b. The records shall include all known information on identification of involved nuclides, quantities, forms, and concentrations.

2. As-built drawings and modifications of structures and equipment in restricted areas where radioactive materials are used, or stored, and of locations of possible inaccessible contamination, such as buried pipes, which may be subject to contamination.

a. If required drawings are referenced, each relevant document need not be indexed individually.

b. If drawings are not available, the licensee shall substitute appropriate records of available information concerning these areas and locations.

3. A list contained in a single document and updated every two (2) years, except for areas containing only sealed sources, ***if[~~provided~~]*** the sources have not leaked or no contamination remains after a leak, or radioactive materials having half-lives of less than sixty-five (65) days, or depleted uranium used only for shielding or as penetrators in unused munitions:

a. Areas designated and formerly designated restricted areas as defined in 902 KAR 100:010, Section 1. For requirements prior to January 26, 1994, see 902 KAR 100:010, Section 1 contained in the 1990 edition of 902 KAR Chapter 100;

b. Areas outside of restricted areas that require documentation under subsection (3) of this section;

c. Areas outside of restricted areas where current and previous wastes have been buried as documented under 902 KAR 100:021, Section 11; and

d. Areas outside of restricted areas that contain material so that, if the license expired, the licensee shall be required to either decontaminate the area to meet the criteria for decommissioning in this administrative regulation or to apply for approval for disposal under 902 KAR 100:021, Section 2.

4. Records of the cost estimate performed for the decommissioning funding plan or of the amount certified for decommissioning, and records of the funding method used for assuring funds if either a funding plan or certification is used.

Section 16. Quantities1 of Licensed Material.

Materials	Microcuries
Americium-241	.01
Antimony-122	100
Antimony-124	10
Antimony-125	10
Arsenic-73	100
Arsenic-74	10
Arsenic-76	10
Arsenic-77	100
Barium-131	10
Barium-133	10
Barium-140	10
Bismuth-210	1
Bromine-82	10
Cadmium-109	10
Cadmium-115m	10
Cadmium-115	100
Calcium-45	10
Calcium-47	10
Carbon-14	100
Cerium-141	100
Cerium-143	100
Cerium-144	1
Cesium-131	1,000
Cesium-134m	100
Cesium-134	1
Cesium-135	10
Cesium-136	10
Cesium-137	10
Chlorine-36	10
Chlorine-38	10
Chromium-51	1,000
Cobalt-58m	10
Cobalt-58	10
Cobalt-60	1
Copper-64	100
Dysprosium-165	10
Dysprosium-166	100

Erbium-169	100
Erbium-171	100
Europium-152 9.2h	100
Europium-152 13 yr	1
Europium-154	1
Europium-155	10
Fluorine-18	1,000
Gadolinium-153	10
Gadolinium-159	100
Gallium-72	10
Germanium-71	100
Gold-198	100
Gold-199	100
Hafnium-181	10
Holmium-166	100
Hydrogen-3	1,000
Indium-113m	100
Indium-114m	10
Indium-115m	100
Indium-115	10
Iodine-125	1
Iodine-126	1
Iodine-129	0.1
Iodine-131	1
Iodine-132	10
Iodine-133	1
Iodine-134	10
Iodine-135	10
Iridium-192	10
Iridium-194	100
Iron-55	100
Iron-59	10
Krypton-85	100
Krypton-87	10
Lanthanum-140	10
Lutetium-177	100
Manganese-52	10
Manganese-54	10
Manganese-56	10
Mercury-197m	100
Mercury-197	100
Mercury-203	10
Molbdenum-99	100
Neodymium-147	100
Neodymium-149	100
Nickel-59	100
Nickel-63	10
Nickel-65	100
Niobium-93m	10
Niobium-95	10
Niobium-97	10
Osmium-185	10
Osmium-191m	100
Osmium-191	100
Osmium-193	100
Palladium-103	100
Palladium-109	100
Phosphorus-32	10
Platinum-191	100
Platinum-193m	100
Platinum-193	100
Platinum-197m	100
Platinum-197	100
Plutonium-239	.01
Polonium-210	0.1
Potassium-42	10
Praseodymium-142	100
Praseodymium-143	100
Promethium-147	10

Promethium-149	10
Radium-226	.01
Rhenium-186	100
Rhenium-188	100
Rhodium-103m	100
Rhodium-105	100
Rubidium-86	10
Rubidium-87	10
Ruthenium-97	100
Ruthenium-103	10
Ruthenium-105	10
Ruthenium-106	1
Samarium-151	10
Samarium-153	100
Scandium-46	10
Scandium-47	100
Scandium-48	10
Seleium-75	10
Silicon-31	100
Silver-105	10
Silver-110m	1
Silver-111	100
Sodium-24	10
Strontium-85	10
Strontium-89	1
Strontium-90	0.10[~~0.12~~]
Strontium-91	10
Strontium-92	10
Sulphur-35	100
Tantalum-182	10
Technetium-96	10
Technetium-97m	100
Technetium-97	100
Technetium-99m	100
Technetium-99	10
Tellurium-125m	10
Tellurium127m	10
Tellurium-127	100
Tellurium-129m	10
Tellurium-129	100
Tellurium-131m	10
Tellurium-132	10
Terbium-160	10
Thallium-200	100
Thallium-201	100
Thallium-202	100
Thallium-204	10
Thorium (natural)1	100
Thulium-170	10
Thulium-171	10
Tin-113	10
Tin-125	10
Tungsten-181	10
Tungsten-185	10
Tungsten-187	100
Uranium (natural)2	100
Uranium-233	.01
Uranium-234 -- Uranium-235	.01
Vandium-48	10
Xenon-131m	1,000
Xenon-133	100
Xenon-135	100
Ytterbium-175	100
Yttrium-90	10
Yttrium-91	10
Yttrium-92	100
Yttrium-93	100
Zinc-65	10
Zinc-69m	100

Zinc-69	1,000
Zirconium-93	10
Zirconium-95	10
Zirconium-97	10
An alpha emitting radionuclide not listed above or mixtures of alpha emitters of unknown composition	.01
A radionuclide other than an alpha emitting radionuclides, not listed above, or mixtures of beta emitters of unknown composition	.1

[1]Based on alpha disintegration rate of Th-232, Th-230 and their daughter products.
[2]Based on alpha disintegration rate of U-238, U-234, and U-235.
Note: For purposes of 902 KAR 100:021, Section 3, if there is involved a combination of isotopes in known amounts, the limit for the combination shall be derived as follows: Determine, for each isotope in the combination, the ratio between the quantity present in the combination and the limit otherwise established for the specific isotope if not in combination. The sum of such ratios for all the isotopes in the combination shall not exceed one ("1") ("unity").

STEPHANIE MAYFIELD GIBSON, MD, FCAP, Commissioner
AUDREY TAYSE HAYNES, Secretary
APPROVED BY AGENCY: September 11, 2014
FILED WITH LRC: September 15, 2014 at 11 a.m.
CONTACT PERSON: Tricia Orme, Office of Legal Services, 275 East Main Street 5 W-B, Frankfort, Kentucky 40601, phone 502-564-7905, fax 502-564-7573, email tricia.orme@ky.gov.

CABINET FOR HEALTH AND FAMILY SERVICES
Department for Public Health
Division of Public Health Protection and Safety
(As Amended at ARRS, December 9, 2014)

902 KAR 100:058. Specific licenses to manufacture, assemble, repair, or distribute products.

RELATES TO: KRS 211.842 - 211.852, 211.990(4), 10 C.F.R. ***31.5, 32.2(b),*** 32.11, 32.18, 32.19, ***32.26,*** 32.51 - 32.74, 32.101 - 32.103, 32.110, ***32.210,*** 40.34, 40.35***, 70.39***
STATUTORY AUTHORITY: KRS 13B.170, 194A.050, 211.090(3), 211.844
NECESSITY, FUNCTION, AND CONFORMITY: KRS 211.844 requires the Cabinet for Health and Family Services to ***promulgate administrative regulations concerning[~~regulate~~]*** the possession or use of sources of ionizing or electronic product radiation and the handling and disposal of radioactive waste. ***KRS 194A.050 authorizes the secretary to promulgate administrative regulations necessary to implement programs mandated by federal law or to qualify for the receipt of federal funds and necessary to cooperate with other state and federal agencies for the proper administration of the cabinet and its programs.*** This administrative regulation establishes requirements for issuing specific licenses to persons who manufacture, assemble, repair, or distribute commodities, products, or devices, that contain radioactive material.

Section 1. Registration of Product Information. (1) A manufacturer or initial distributor of a sealed source, or device containing a sealed source, whose product is intended for use under a specific license, shall submit a request to the cabinet ***pursuant to 10 C.F.R. 32.210,*** for evaluation of radiation safety information about its product and for its registration.
(2) The request for review of a sealed source or device shall include sufficient information to provide reasonable assurance that the radiation safety properties of the source or device are adequate to protect health and minimize danger to life and property.
(3) The request shall include information on:
(a) Design;
(b) Manufacture;
(c) Prototype testing;
(d) Quality control program;
(e) Labeling;
(f) Proposed uses; and
(g) Leak testing.
(4) For a device, the request shall also include sufficient information about:
(a) Installation;
(b) Service and maintenance;
(c) Operating and safety instructions; and
(d) Potential hazards.
(5) The cabinet shall evaluate a sealed source or device using radiation safety criteria in accepted industry standards. If the standards and criteria ***pursuant to 10 C.F.R. 32.210,*** do not readily apply to a particular case, the cabinet shall formulate reasonable standards and criteria, with the help of the manufacturer or distributor. The cabinet shall use criteria and standards sufficient to ensure that the radiation safety properties of the device or sealed source are adequate to protect health and minimize danger to life and property.
(6) After completion of the evaluation, the cabinet shall issue a certificate of registration to the person making the request. The certificate shall acknowledge the availability of the submitted information for inclusion in an application for a specific license proposing use of the product.
(7) A person submitting the request for evaluation and registration of safety information about the product shall manufacture and distribute the product in accordance with:
(a) The statements and representations, including quality control program, contained in the request; and
(b) The provisions of the registration certificate.

Section 2. Licensing the Introduction of Radioactive Material into Products in Exempt Concentrations. (1) In addition to the requirements established in 902 KAR Chapter 100 a specific license authorizing the introduction of radioactive material into a product or material owned by or in the possession of the licensee or another, to be transferred to a person exempt under 902 KAR 100:045, Section 2(1)(a) shall be issued if:
(a) The applicant submits a description of the:
1. Product or material into which the radioactive material will be introduced;
2. Intended use of the radioactive material and the product or material into which it is introduced;
3. Method of introduction;
4. Initial concentration of the radioactive material in the product or material;
5. Control methods to assure that no more than the specified concentration shall be introduced into the product or material;
6. Estimated time interval between introduction and transfer of the product or material; and
7. Estimated concentrations of the radioactive material in the product or material at the time of transfer; and
(b) The applicant provides reasonable assurance that the:
1. Concentrations of the radioactive material at the time of transfer shall not exceed the concentrations established in 902 KAR 100:085;
2. Reconcentration of the radioactive material in concentrations exceeding those in 902 KAR 100:085 is not likely;
3. Use of lower concentrations is not feasible; and
4. Product or material is not likely to be incorporated in a food, beverage, cosmetic, drug, or other commodity or product designed for ingestion or inhalation by, or application to, a human being.
(2) A person licensed pursuant to this administrative regulation shall:
(a) Maintain records of transfer of radioactive material;
(b) File an annual report with the cabinet that shall include the:
1. Type and quantity of a product or material into which radioactive material has been introduced during the reporting period;
2. Name and address of the person who owned or possessed the product or material into which radioactive material has been

introduced at ***[~~the time of~~]***introduction;

3. Type and quantity of radionuclide introduced into a product or material; and

4. Initial concentrations of the radionuclide in the product or material at ***[~~the time of~~]***transfer of the radioactive material by the licensee;

(c) Indicate in the report if no transfers of radioactive material have been made during the reporting period;

(d) File a report by July 30 covering the year ending the previous June 30; and

(e) Maintain the record of a transfer for a period of one (1) year after the event is included in a report to the cabinet.

Section 3. Resins Containing Scandium-46 and Designed for Sand-Consolidation in Oil Wells: Requirements for License to Manufacture or Initially Transfer for Sale or Distribution. An application for a specific license to manufacture or initially transfer for sale or distribution, synthetic plastic resins containing scandium-46 for use as indicated in 902 KAR 100:045, Section 3(3), shall be approved if:

(1) The applicant satisfies the requirements specified in 902 KAR 100:040, Section 4;

(2) The product is designed to be used only for sand-consolidation in oil wells;

(3) The applicant submits the following information:

(a) A general description of the product to be manufactured or initially transferred; and

(b) A description of control procedures used to assure that the concentration of scandium-46 in the final product at the time of distribution shall not exceed 1.4×10^{-3} micro-curie/milliliter; and

(4) A container of the product bears a durable, legible label approved by the cabinet based on the following information:

(a) The product name;

(b) A statement that the product contains radioactive scandium and is designed and manufactured only for sand-consolidation in oil wells;

(c) Instructions necessary for proper use; and

(d) The manufacturer's name.

Section 4. Licensing the Manufacture and Distribution of a Device to a Person Generally Licensed under 902 KAR 100:050. (1) In addition to the requirements established in 902 KAR Chapter 100 an application for a specific license to distribute certain devices containing radioactive material, excluding special nuclear material, to a person generally licensed shall be issued only if the applicant submits sufficient information relating to the:

(a) Design;

(b) Manufacture;

(c) Prototype testing;

(d) Quality control;

(e) Labels;

(f) Proposed uses;

(g) Installation;

(h) Servicing;

(i) Leak testing;

(j) Operating and safety instructions; and

(k) Potential hazards of the device to provide reasonable assurance that:

1. Under accident conditions, such as fire and explosion associated with handling, storage, and use of the device, it is unlikely that a person would receive an external radiation dose or dose commitment in excess of the following organ doses:

a. Whole body, head and trunk, active blood-forming organs, gonads, or lens of eye - 15 rems (150 mSv);

b. Hands and forearms, feet and ankles, or localized areas of skin averaged over areas no larger than one (1) square centimeter - 200 rems (2 Sv); or

c. Other organs - 50 rems (500 mSv)***;[~~.~~]***

2. Under ordinary conditions of handling, storage, and use of the device, the radioactive material contained in the device shall not be released or inadvertently removed from the device, and it is unlikely that a person will receive in a period of one (1) calendar year a dose in excess of ten (10) percent of the limits specified in 902 KAR 100:019, Section 3; and

3. The device can be safely operated by individuals not having training in radiological protection.

(2) A device identified in subsection (1) of this section shall bear a durable, legible, clearly visible label or labels, in accordance with 902 KAR 100:050, which contain in a clearly identified and separate statement:

(a) Instructions and precautions necessary to assure safe installation, operation, and servicing of the device ***or reference to [(]***documents***,*** such as operating and service manuals ***[~~may be~~]***identified in the label ***that are[~~and~~]*** used to provide this information***[)]***;

(b) The requirement, or lack of requirement, for leak testing or for testing an "on-off" mechanism and indicator, including the maximum time interval for the testing and the identification of radioactive material by:

1. Isotope;

2. Quantity of radioactivity; and

3. Date of determination of the quantity; and

(c) The information called for in the following statement, in the same or substantially similar form:

"The receipt, possession, use, and transfer of this device, Model _____, Serial No. _____, are subject to a general license or the equivalent and the regulations of the U.S. Nuclear Regulatory Commission or an Agreement State. This label shall be maintained on the device in a legible condition. Removal of this label is prohibited.

CAUTION - RADIOACTIVE MATERIAL

Name of manufacturer or distributor

The model, serial number, and name of the manufacturer or distributor may be omitted from this label if the information is elsewhere specified in labeling affixed to the device.

(3)(a) If the applicant desires that the device identified in subsection (1) of this section be required to be tested for proper operation of the "on-off" mechanism and indicator or for leakage of radioactive material, subsequent to the initial tests required by this administrative regulation at intervals longer than six (6) months but not exceeding three (3) years, the applicant shall include in the application sufficient information to demonstrate that the longer interval is justified by:

1. Performance characteristics of the device or similar devices; and

2. Design features that have a significant bearing on the probability or consequences of leakage of radioactive material from the device or failure of the "on-off" mechanism and indicator.

(b) In determining the acceptable interval for the test for leakage of radioactive material, the cabinet may consider information that shall include:

1. Primary containment or source capsule;

2. Protection of primary containment;

3. Method of sealing containment;

4. Containment construction materials;

5. Form of contained radioactive material;

6. Maximum temperature withstood during prototype tests;

7. Maximum pressure withstood during prototype tests;

8. Maximum quantity of contained radioactive material;

9. Radiotoxicity of contained radioactive material; and

10. Operating experience with identical devices or similarly designed and constructed devices.

(4)(a) If the applicant desires authorization of the general licensee established in 902 KAR 100:050, Section 3, or pursuant to equivalent regulations of the U.S. Nuclear Regulatory Commission or an Agreement State, to install the device, collect the sample to be analyzed by a specific licensee for leakage of radioactive material, service the device, test the "on-off" mechanism and indicator, or remove the device from installation, the applicant shall include in the application:

1. Written instructions to be followed by the general licensee;

2. Estimated calendar quarter doses associated with the activity or activities; and

3. Basis for the estimates.

(b) The information shall demonstrate that performance of the activity by an individual untrained in radiological protection,

handling, storage, and use of devices under the general license, is unlikely to cause that individual to receive a dose in excess of ten (10) percent of the annual limits specified in 902 KAR 100:019, Section 3.

(5) A person licensed pursuant to this administrative regulation to distribute devices to generally licensed persons shall:

(a) Furnish a copy of the general license identified in 902 KAR 100:050, Section 3, to each person to whom the licensee, directly or through an intermediate person, transfers radioactive material in a device for use as authorized by a general license;

(b) Furnish a copy of the general license contained in the U.S. Nuclear Regulatory Commission's or Agreement State's regulation equivalent to 902 KAR 100:050, Section 3, or alternatively, furnish a copy of the general license to each person to whom the licensee directly or through an intermediate person transfers radioactive material in a device for use pursuant to the general license of the U.S. Nuclear Regulatory Commission or the Agreement State. If a copy of the general license identified in 902 KAR 100:050, Section 3, is furnished to the person, it shall be accompanied by a note explaining that the use of the device is regulated by the U.S. Nuclear Regulatory Commission or Agreement State under requirements substantially the same as those in 902 KAR 100:050, Section 3;

(c) Report to the cabinet transfers of the devices to persons for use under the general license.

1. The report shall identify:

a. A general licensee by name and address;

b. An individual by name or position who may constitute a point of contact between the cabinet and the general licensee;

c. The type and model number of device transferred; and

d. The quantity and type of radioactive material contained in the device.

2. If one (1) or more intermediate persons possess the device temporarily at the intended place of use prior to its possession by the user, the report shall include identification of each intermediate person by name, address, contact, and relationship to the intended user.

3. ***The report shall indicate*** if no transfers have been made to persons generally licensed during the reporting period***[, the report shall so indicate]***.

4. The report shall cover a calendar quarter and shall be filed within thirty (30) days of the close of the quarter.

(d) Furnish reports to other agencies***, including[as follows]***:

1.***a.*** Report to the U.S. Nuclear Regulatory Commission transfers of ***these[such]*** devices to persons for use under the U.S. Nuclear Regulatory Commission general license in Section 31.5 of 10 C.F.R. Part 31; or

b.[2.] Report to the responsible state agency transfers of devices manufactured and distributed for use under a general license in that state's regulations equivalent to 902 KAR 100:050, Section 3;

c.[and

3. The reports shall] Identify:

(i)[a.] A general licensee by name and address;

(ii)[b.] An individual by name or position who may constitute a point of contact between the agency and the general licensee;

(iii)[c.] The type and model of the device transferred; and

(iv)[d.] The quantity and type of radioactive material contained in the device***;***

2.[, 4.] If one (1) or more intermediate persons possess the device temporarily at the intended place of use prior to its possession by the user, ***[the report shall]***include identification of each intermediate person by name, address, contact, and relationship to the intended user;

3. Submit[5. The report shall be submitted] within thirty (30) days after the end of the calendar quarter in which the device is transferred to the generally licensed person;

4.[6.] If no transfers have been made to U.S. Nuclear Regulatory Commission licensees during the reporting period, this information shall be reported to the U.S. Nuclear Regulatory Commission; and

5.[7.] If no transfers have been made to general licensees within a particular state during the reporting period, this information shall be reported to the responsible state agency upon request of that agency;

(e) Keep records showing the name, address, and the point of contact for a general licensee to which the licensee, directly or through an intermediate person, transfers radioactive material in devices for use as authorized by a general license or equivalent regulations of the U.S. Nuclear Regulatory Commission or an Agreement State. The records shall show:

1. The date of transfer;

2. The radionuclide and the quantity of radioactivity in each device transferred;

3. The identity of the intermediate person; and

4. Compliance with the report requirements; and

(f) Maintain the records required by paragraphs (c) and (d) of this subsection for a period of five (5) years from the date of the recorded transfer.

Section 5. Special Requirements for the Manufacture, Assembly, or Repair of Luminous Safety Devices for use in Aircraft. An application for a specific license to manufacture, assemble, or repair luminous safety devices containing tritium or promethium-147 for use in aircraft, for distribution to persons generally licensed pursuant to 902 KAR 100:050***,*** shall be approved if:

(1) The applicant satisfies the requirements specified in 902 KAR 100:040, Section 4; and

(2) The applicant satisfies the requirements of U.S. Nuclear Regulatory Commission 10 C.F.R. Part 32, Sections 32.2(b), 32.53, 32.54, 32.55, 32.56, 32.101, and 32.110 or their equivalent.

Section 6. Special Requirements for License to Manufacture and Distribute Calibration Sources Containing Americium-241, Plutonium or Radium-226 for Distribution to Persons Generally Licensed pursuant to 902 KAR 100:050. An application for a specific license to manufacture or distribute calibration and reference sources containing americium-241, plutonium or radium-226 to persons generally licensed pursuant to 902 KAR 100:050 shall be approved if:

(1) The applicant satisfies the requirements established in 902 KAR 100:040, Section 4; and

(2) The applicant satisfies the requirements of U.S. Nuclear Regulatory Commission 10 C.F.R. Part 32, Sections 32.57, 32.58, 32.59, and 32.102, and 10 C.F.R. Part 70, Section 70.39, or their equivalent.

Section 7. Licensing the Manufacture and Distribution of Ice Detection Devices Containing Strontium-90. An application for a specific license to manufacture and distribute ice detection devices to persons generally licensed shall be approved if:

(1) The applicant satisfies the requirements established in 902 KAR 100:040, Section 4; and

(2) The criteria of U.S. Nuclear Regulatory Commission 10 C.F.R. Part 32, Sections 32.2(b), 32.61, 32.62, 32.103, and 32.110 are met.

Section 8. Manufacture and Distribution of Radioactive Material for Certain In Vitro Clinical or Laboratory Testing under a General License. An application for a specific license to manufacture or distribute radioactive material for use pursuant to the general license established in 902 KAR 100:050, Section 4, shall be approved if:

(1) The applicant satisfies the general requirements specified in 902 KAR 100:040, Section 4;

(2) The radioactive material is to be prepared for distribution in prepackaged units of:

(a) Iodine-125 in units not exceeding ten (10) microcuries (370 kBq) each;

(b) Iodine-131 in units not exceeding ten (10) microcuries (370 kBq) each;

(c) Carbon-14 in units not exceeding ten (10) microcuries (370 kBq) each;

(d) Hydrogen-3 (tritium) in units not exceeding fifty (50) microcuries (1.85 MBq) each;

(e) Iron-59 in units not exceeding twenty (20) microcuries (704 kBq) each;

(f) Selenium-75 in units not exceeding ten (10) microcuries (370 kBq) each;

(g) Mock iodine-125 in units not exceeding 0.05 microcurie (1.85 MBq) of iodine-129 and 0.005 microcurie (185 Bq) of americium-241 each; or

(h) Cobalt-57 in units not exceeding fifty (50) microcuries (370 kBq) each;

(3) Each prepackaged unit bears a durable, clearly visible label:

(a) Identifying the radioactive contents as to chemical form and radionuclide, and indicating that the amount of radioactivity does not exceed:

1. Ten (10) microcuries (370 kBq) of iodine-131, iodine-125, selenium-75, cobalt-57, or carbon-14;

2. Fifty (50) microcuries (1.85 MBq) of hydrogen-3 (tritium);

3. Twenty (20) microcuries (740 kBq) of iron-59; or

4. Mock iodine-125 in units not exceeding 0.05 microcurie (1.85 kBq) of iodine-129 and 0.005 microcurie (185 Bq) of americium-241 each; and

(b) Displaying the radiation caution symbol described in 902 KAR 100:019, Section 23, and the words, "Caution, Radioactive Material" and "Not for Internal or External Use in Humans or Animals";

(4) The following statement, or a substantially similar statement which contains the information called for in the following statement, appears on a label affixed to a prepackaged unit, or appears in a leaflet or brochure which accompanies the package:

"This radioactive material may be received, acquired, possessed, and used only by physicians, veterinarians, clinical laboratories or hospitals and only for in vitro clinical or laboratory tests not involving internal or external administration of the material, or the radiation therefrom, to human beings or animals. Its receipt, acquisition, possession, use, and transfer are subject to the administrative regulations and a general license or the equivalent of the United States Nuclear Commission or of an Agreement State.
(Name of Manufacturer)"; and

(5) The label affixed to the unit, or the leaflet or brochure that accompanies the package, contains adequate information regarding precautions to be observed in handling and storing the radioactive material. For a mock iodine-125 reference or calibration source, the information accompanying the source shall contain directions to the licensee regarding the waste disposal requirements established in 902 KAR 100:021, Section 1.

Section 9. Manufacture and Distribution of Radiopharmaceuticals Containing Radioactive Material for Medical Use Under Specific Licenses. (1) An application for a specific license to manufacture, prepare**,** or transfer for commercial distribution radiopharmaceuticals containing radioactive material for use by persons licensed pursuant to 902 KAR 100:072, shall be approved if the applicant:

(a) Satisfies the requirements specified in 902 KAR 100:040, Section 4;

(b) Submits evidence that the applicant is at least one (1) of the following:

1. Registered or licensed with the U.S. Food and Drug Administration (FDA) as a drug manufacturer;

2. Registered or licensed with a state agency as a drug manufacturer;

3. Licensed as a pharmacy by the State Board of Pharmacy; or

4. Operating as a nuclear pharmacy within the federal medical institution***;[~~,~~]***

(c) Submits information on:

1. The radionuclide;

2. Chemical and physical form;

3. Maximum activity per vial, syringe, generator, or other container of the radioactive drug; and

4. Shielding provided by the packaging of the radioactive material to show it is appropriate for safe handling and storage of radiopharmaceuticals by medical use licensees; and

(d) Satisfies the ***[~~following~~]***labeling requirements ***in this paragraph***:

1. The label shall be affixed to the transport radiation shield, if it is constructed of lead, glass, plastic, or other material of a radioactive drug to be transferred for commercial distribution. The label shall include:

a. The radiation symbol;

b. The words "CAUTION, RADIOACTIVE MATERIAL" or "DANGER, RADIOACTIVE MATERIAL";

c. The name of the radioactive drug or its abbreviation; and

d. The quantity of radioactivity at a specified date and time. For radioactive drugs with a half life greater than 100 days, the time may be omitted.

2. A label shall be affixed to a syringe, vial, or other container used to hold a radioactive drug to be transferred for commercial distribution. The label shall include:

a. The radiation symbol;

b. The words "CAUTION, RADIOACTIVE MATERIAL" or "DANGER, RADIOACTIVE MATERIAL"***;*** and

c. An identifier that ensures the syringe, vial, or other container can be correlated with the information on the transport radiation shield label.

(2) A licensee described by subsection (1)(b)3 or 4 of this section may:

(a) Prepare radioactive drugs for medical use, as defined in 902 KAR 100:010, if the radioactive drug is prepared by an authorized nuclear pharmacist, as specified in paragraphs (b) and (c) of this subsection, or an individual under the supervision of an authorized nuclear pharmacist, as specified in 902 KAR 100:072, Section 12;

(b) Allow a pharmacist to work as an authorized nuclear pharmacist if the individual:

1. Qualifies as an authorized nuclear pharmacist as defined in 902 KAR 100:010;

2. Meets the requirements specified in 902 KAR 100:072, Sections 63 and 66, and the licensee has received an approved license amendment identifying the individual as an authorized nuclear pharmacist; or

3. Is designated as an authorized nuclear pharmacist in accordance with paragraph (c) of this subsection***; and[~~,~~]***

(c) Designate a pharmacist as an authorized nuclear pharmacist if the individual is identified as an authorized user on a nuclear pharmacy license issued by the cabinet.

(3) The actions authorized in subsections (2)(a) and (b) of this section ***shall be[~~are~~]*** permitted in spite of more restrictive language in license conditions.

(4) A licensee shall provide to the cabinet a copy of an individual's certification by the Board of Pharmaceutical Specialties, the cabinet, the U.S. Nuclear Regulatory Commission, or an agreement state license, and a copy of the state pharmacy licensure or registration, no later than thirty (30) days after the date that the licensee allows the individual to work as an authorized nuclear pharmacist, pursuant to subsection (2)(b)1 and 3 of this section.

(5) A licensee shall:

(a) Possess and use instrumentation to measure the radioactivity of radioactive drugs;

(b) Have procedures for use of the instrumentation;

(c) Measure, by direct measurement or by combination of measurements and calculations, the amount of radioactivity in dosages of alpha-, beta- or photon-emitting radioactive drugs prior to transfer for commercial distribution;

(d) Perform accuracy, linearity, and geometry dependence tests on an instrument before initial use, periodically, and following repair, as appropriate for the instrument, and make necessary adjustments; and

(e) Check an instrument for constancy and proper operation at the beginning of each day of use.

(6) ***[~~Nothing in~~]***This section ***shall not relieve[~~relieves~~]*** a licensee from complying with applicable FDA, other federal, and state requirements governing radioactive drugs.

Section 10. Manufacture and Distribution of Sources or

Devices Containing Radioactive Material for Medical Use. An application for a specific license to manufacture and distribute sources and devices containing radioactive material to persons licensed as authorized by 902 KAR 100:072 for use as a calibration, transmission, or reference source or for medical uses listed in 902 KAR 100:072, Sections 37, 45 and 46 shall be approved if:

(1) The applicant satisfies the requirements established in 902 KAR 100:040, Section 4;

(2) The applicant submits sufficient information regarding a type of source or device pertinent to an evaluation of its radiation safety, including:

(a) The radioactive material contained, its chemical and physical form, and amount;

(b) Details of design and construction of the source or device;

(c) Procedures for, and results of, prototype tests to demonstrate that the source or device will maintain its integrity under stresses likely to be encountered in normal use and accidents;

(d) For devices containing radioactive material, the radiation profile of a prototype device;

(e) Details of quality control procedures to assure that production sources and devices meet the standards of the design and prototype tests;

(f) Procedures and standards for calibrating sources and devices;

(g) Legend and methods for labeling sources and devices as to their radioactive content; and

(h) Instructions for handling and storing the source or device from the radiation safety standpoint. The instructions shall be included on a durable label attached to the source or device, or attached to a permanent storage container for the source or device. Instructions too lengthy for a label may be summarized on the label and printed in detail on a brochure referenced on the label;

(3) The label affixed to the source or device, or to the permanent storage container for the source or device, contains:

(a) Information on the radionuclide;

(b) Quantity***[;]*** and ***[(c)]***date of assay; and

(c)[(d)] A statement that the name of source or device is licensed by the cabinet for distribution to persons licensed as authorized by 902 KAR 100:072, or under equivalent licenses of the U.S. Nuclear Regulatory Commission or an Agreement State;

(4) If an applicant desires the source or device to be tested for leakage of radioactive material at intervals longer than six (6) months, ***the applicant[he]*** shall include in the application sufficient information to demonstrate that the longer interval is justified by:

(a) Performance characteristics of the source or device, or similar sources or devices; and

(b) Design features having a significant bearing on the probability or consequence of leakage of radioactive material from the source; and

(5) In determining the acceptable interval for tests of leakage of radioactive material, the cabinet shall consider information that includes:

(a) Primary containment or source capsule;

(b) Protection of primary containment;

(c) Method of sealing containment;

(d) Containment construction materials;

(e) Form of contained radioactive material;

(f) Maximum temperature withstood during prototype tests;

(g) Maximum pressure withstood during prototype tests;

(h) Maximum quantity of contained radioactive material;

(i) Radiotoxicity of contained radioactive material; and

(j) Operating experience with identical sources or devices, or similarly designed and constructed sources or devices.

Section 11. Requirements for License to Manufacture and Distribute Industrial Products Containing Depleted Uranium for Mass-volume Applications. (1) An application for a specific license to manufacture or distribute an industrial product or device containing depleted uranium for use authorized by 902 KAR 100:050, Section 2, or equivalent regulations of the U.S. Nuclear Regulatory Commission or an Agreement State shall be approved if:

(a) The applicant satisfies the general requirements specified in 902 KAR 100:040, Section 4;

(b) The applicant submits sufficient information relating to the:

1. Design;

2. Manufacture;

3. Prototype testing;

4. Quality control procedures;

5. Labeling or marking;

6. Proposed uses; and

7. Potential hazards of the industrial product or device;

(c) The applicant provides reasonable assurance that possession, use, or transfer of the depleted uranium in the product or device is not likely to cause an individual to receive in a period of one (1) year a radiation dose in excess of ten (10) percent of the limits specified in 902 KAR 100:019, Section 3; and

(d) The applicant submits sufficient information regarding the industrial product or device, and the presence of depleted uranium for a mass-volume application in the product or device, to provide reasonable assurance that unique benefits will accrue to the public because of the usefulness of the product or device.

(2) For an industrial product or device that ***has questionable unique benefits[is unique benefits are questionable]***, the cabinet may approve an application for a specific license pursuant to this section only if the product or device is found to combine a high degree of utility and low probability of uncontrolled disposal and dispersal of significant quantities of depleted uranium into the environment.

(3) The cabinet shall deny an application for a specific license pursuant to this section if the end use of the industrial product or device cannot reasonably be foreseen.

(4) A person licensed as authorized by this section shall:

(a) Maintain the level of quality control required by the license in:

1. Manufacture of the industrial product or device; and

2. Installation of the depleted uranium into the product or device;

(b) Label or mark each unit to identify:

1. The manufacturer of the product or device;

2. The number of the license under which the product or device was manufactured or distributed;

3. The fact that the product or device contains depleted uranium;

4. The quantity of depleted uranium in the product or device; and

5. That the receipt, possession, use, or transfer of the product or device is subject to a general license, or the equivalent, and the regulations of the U.S. Nuclear Regulatory Commission or an Agreement State;

(c) Assure that the depleted uranium, before being installed in a product or device, has been impressed with the legend "DEPLETED URANIUM" clearly legible through plating or other covering;

(d) Furnish a copy of the general license contained in:

1. 902 KAR 100:050 to a person to whom depleted uranium is transferred in a product or device for use authorized by the general license; or

2. The U.S. Nuclear Regulatory Commission's or Agreement State's regulation equivalent to 902 KAR 100:050, and a copy of an applicable U.S. Nuclear Regulatory Commission's or Agreement State's certificate, to a person to whom depleted uranium is transferred in a product or device for use as authorized by the general license of the U.S. Nuclear Regulatory Commission or an Agreement State, with a note explaining that use of the product or device is regulated by the U.S. Nuclear Regulatory Commission or an Agreement State under requirements substantially the same as those in 902 KAR 100:050;

(e) Furnish the following to either the cabinet, U.S. Nuclear Regulatory Commission, or agreement state:

1. A report of each transfer of an industrial product or device to a person for use pursuant to the general license in 902 KAR 100:050. The report shall identify:

a. A general licensee by name and address;

b. An individual, by name or position, who constitutes a point of contact between the cabinet and the general licensee;

c. The type and model number of device transferred; and

d. The quantity of depleted uranium contained in the product or device.

2. The report identified in subparagraph 1 of this paragraph shall be submitted within thirty (30) days after the end of a calendar quarter in which the product or device is transferred to the generally licensed person. If no transfers have been made to persons generally licensed pursuant to 902 KAR 100:050 during the reporting period, the report shall so indicate; and

(f) Keep records showing the name, address, and point of contact for a general licensee to whom he transfers depleted uranium in an industrial product or device for use authorized by the general license provided in 902 KAR 100:050 or equivalent regulations of the U.S. Nuclear Regulatory Commission or an Agreement State. The records shall be maintained for a period of three (3) years from the date of transfer and shall show the date of each transfer, the quantity of depleted uranium in a product or device transferred, and compliance with the report requirements of this section.

Section 12. Licensing the Distribution of Naturally Occurring and Accelerator Produced Radioactive Material (NARM) in Exempt Quantities. (1) An application for a specific license to distribute NARM to persons exempted from these regulations authorized by 902 KAR 100:045 shall be approved if:

(a) The radioactive material is not contained in a food, beverage, cosmetic, drug, or other commodity designed for ingestion or inhalation by, or application to, a human being;

(b) The radioactive material is in the form of processed chemical elements, compounds, or mixtures, tissue samples, bioassay samples, counting standards, plated or encapsulated sources, or similar substances, identified as radioactive and to be used for its radioactive properties, but is not incorporated into a manufactured or assembled commodity, product, or device intended for commercial distribution; and

(c) The applicant submits copies of prototype labels and brochures in accordance with 10 C.F.R. 32.18 and 32.19 and the cabinet approves the labels and brochures.

(2) The license issued pursuant to this section ***shall be[is]*** subject to the following conditions:

(a) ***[No]***More than ten (10) exempt quantities shall ***not*** be sold or transferred in a single transaction. However, an exempt quantity may be composed of fractional parts of one (1) or more of the exempt quantity, if the sum of the fractions does not exceed unity.

(b) An exempt quantity shall be packaged separately and individually. ***[No]***More than ten (10) packaged exempt quantities shall ***not*** be contained in an outer package for transfer to persons exempt as authorized by 902 KAR 100:045. The dose rate at the external surface of the outer package shall not exceed five-tenths (0.5) millirem per hour.

(c) The immediate container of each quantity or separately packaged fractional quantity of radioactive material shall bear a durable, legible label which:

1. Identifies the radionuclide and the quantity of radioactivity; and

2. Bears the words "Radioactive Material."

(d) In addition to the labeling information required by this subsection, the label affixed to the immediate container, or an accompanying brochure, shall:

1. State that the contents are exempt from licensing agency requirements;

2. Bear the words "Radioactive Material - Not for Human Use - Introduction into Foods, Beverages, Cosmetics, Drugs, or Medicinals, or into Products Manufactured for Commercial Distribution is Prohibited - Exempt Quantities Should Not Be Combined"; and

3. Establish appropriate additional radiation safety precautions and instructions relating to the handling, use, storage, and disposal of the radioactive material.

(3)(a) A person licensed pursuant to this section shall maintain records identifying, by name and address, each person to whom radioactive material is transferred for use in accordance with 902 KAR 100:045 or the equivalent regulations of a licensing agency, and stating the kinds and quantities of radioactive material transferred.

(b) An annual summary report stating the total quantity of each radionuclide transferred under the specific license shall be filed with the cabinet.

(c) A report shall cover the year ending June 30 and shall be filed within thirty (30) days after June 30. ***The report shall indicate*** if no transfers of radioactive material have been made ***during the reporting period***, as authorized by this section***[, during the reporting period, the report shall so indicate]***.

Section 13. Licensing the Incorporation of Naturally Occurring and Accelerator Produced Radioactive Material (NARM) into Gas and Aerosol Detectors. (1) An application for a specific license authorizing the incorporation of NARM into gas and aerosol detectors to be distributed to persons exempt pursuant to 902 KAR 100:045 shall be approved if the application satisfies requirements equivalent to those contained in U.S. Nuclear Regulatory Commission 10 C.F.R. Part 32.26.

(2) The maximum quantity of radium-226 in a device shall not exceed one-tenth (0.1) microcurie (3.7 kBq).

STEPHANIE MAYFIELD GIBSON, MD, FCAP, Commissioner
AUDREY TAYSE HAYNES, Secretary

APPROVED BY AGENCY: September 11, 2014

FILED WITH LRC: September 15, 2014 at 11 a.m.

CONTACT PERSON: Tricia Orme, Office of Legal Services, 275 East Main Street 5 W-B, Frankfort, Kentucky 40601, phone 502-564-7905, fax 502-564-7573, email tricia.orme@ky.gov.

CABINET FOR HEALTH AND FAMILY SERVICES
Department for Public Health
Division of Public Health Protection and Safety
(As Amended at ARRS, December 9, 2014)

902 KAR 100:070. Transportation of radioactive material.

RELATES TO: KRS 211.842-211.852, 211.990(4), 10 C.F.R. 71, ***73,*** 39 C.F.R. 111.1, 49 C.F.R. ***107,*** 170-189

STATUTORY AUTHORITY: KRS 13B.170, 194A.050, 211.090(3), 211.844

NECESSITY, FUNCTION, AND CONFORMITY: ***KRS 194A.050(1) requires the secretary to promulgate those administrative regulations necessary to implement programs mandated by federal law or to qualify for the receipt of federal funds and necessary to cooperate with other state and federal agencies for the proper administration of the cabinet and its programs.*** KRS 211.844 requires the Cabinet for Health and Family Services to ***promulgate[provide by]*** administrative regulation for the registration and licensing of the possession or use of sources of ionizing or electronic product radiation and the handling and disposal of radioactive waste. This administrative regulation establishes requirements for transportation of radioactive material.

Section 1. Applicability. (1) Applies to a licensee authorized by a specific or general license issued by the cabinet to receive, possess, use, or transfer radioactive material, when:

(a) The licensee delivers that material to a carrier for transport;

(b) Transports the material outside the site of usage as specified in the cabinet license; or

(c) Transports the material on public highways.

(2) ***This administrative regulation shall not authorize[No provision of this administrative regulation authorizes]*** the possession of radioactive material.

Section 2. Requirement for a License. A person shall not deliver radioactive material to a carrier for transport, or transport radioactive material, unless:

(1) Authorized in a general or specific license issued by the cabinet; or

(2) Exempted pursuant to Section 3 of this administrative regulation.

Section 3. Exemptions. (1) A licensee is exempt from all the requirements of this administrative regulation with respect to shipment or carriage of the following low-level materials:

(a) Natural material and ores containing naturally occurring radionuclides that are not intended to be processed for use of these radionuclides, ***if[provided]*** the activity concentration of the material does not exceed ten (10) times the values specified in 10 C.F.R. 71, Appendix A; and

(b) Materials for which the activity concentration is not greater than the activity concentration values, or for which the consignment activity is not greater than the limit for an exempt consignment found in 10 C.F.R. 71, Appendix A.

(2)[~~A licensee shall be exempt from requirements in this administrative regulation, except for Sections 4 and 12 of this administrative regulation, with respect to shipment or carriage of the following packages, provided the packages do not contain fissile material, or the material is exempt from classification as fissile material under Section 14;~~

~~(a) A package that contains no more than a Type A quantity of radioactive material;~~

~~(b) A package transported within the United States that contains no more than twenty (20) Curies (0.74 TBq) of special form plutonium-244; or~~

~~(c) The package contains only LSA or SCO radioactive material, provided:~~

~~1. The LSA or SCO material has an external radiation dose of less than or equal to one (1) rem/hour (10 mSv/hour), at a distance of three (3) meters from the unshielded material; or~~

~~2. The package contains only LSA-1 or SCO-1 material.~~

~~(3)~~] A physician licensed by the Commonwealth to dispense drugs in the practice of medicine shall be exempt from Section 4 of this administrative regulation with respect to transport by the physician of radioactive material for use in the practice of medicine. However, a physician operating under this exemption shall be licensed pursuant to 902 KAR 100:072 or equivalent regulations of the NRC or an agreement state.

Section 4. Transportation of Licensed Material. (1) Each[~~A~~] licensee who transports licensed material outside of the confines of his plant or other place of use specified in the cabinet license, or if transport is[~~who transports~~] on a public highway, or who delivers licensed material to a carrier for transport, shall:

(a) Comply with the applicable requirements, appropriate to the mode of transport, of the regulations of the U.S. Department of Transportation in 49 C.F.R. 107, 171 through 180[~~189~~], and 390 through 397; and

(b) Assure that special instructions needed to open the package safely are sent to, or have been made available to, the consignee for the consignee's use in accordance with 902 KAR 100:019, Section 28(5).

(2) If the regulations of the U.S. Department of Transportation (DOT) are not applicable to a shipment of licensed material, the licensee shall conform to the standards and requirements of the Department of Transportation regulations, specified in subsection (1)(a) of this section, to the same extent as if the shipment was subject to the DOT regulations.

Section 5. General Licenses for Carriers. (1) A general license shall be issued to a common or contract carrier, not exempt under Section 3 of this administrative regulation, to receive, possess, transport, and store radioactive material in the regular course of carriage for another, or storage incident to the transportation and storage, if the transportation and storage is in accordance with the applicable requirements, appropriate to the mode of transport, of the U.S. Department of Transportation relating to the loading and storage of packages, placarding of the transporting vehicle, and incident reporting.

(2) A general license shall be issued to a private carrier to transport radioactive material, if the transportation is in accordance with the applicable requirements, appropriate to the mode of transport, of the U.S. Department of Transportation relating to the loading and storage of packages, placarding of the transporting vehicle, and incident reporting.

(3) The notification of incidents referred to in the U.S. Department of Transportation requirements identified in subsection (1) of this section shall be filed with, or made to, the cabinet.

(4) A person authorized by a general license described in this section, who transports radioactive material, is exempt from the requirements of 902 KAR 100:019 and 902 KAR 100:165.

Section 6. General License: NRC Approved Packages. (1) A general license shall be issued to a licensee of the cabinet to transport or to deliver to a carrier for transport, licensed material in a package for which a license, certificate of compliance (CoC), or other approval has been issued by the NRC.

(2) The general license shall apply only to a licensee who:

(a) Has a quality assurance program approved by the NRC as satisfying the provisions of 10 C.F.R. 71.101 through 137;

(b) Has a copy of the certificate of compliance, or other approval of the package, and has the drawings and other documents referenced in the approval relating to the use and maintenance of the packaging and to the actions to be taken prior to shipment;

(c) Complies with the terms and conditions of the license, certificate, or other approval, as applicable, and the applicable requirements of this administrative regulation and 10 C.F.R. 71.0 through 71.11, 71.81 through 71.100, and 71.101 through 71.137; and

(d) Submits in writing to Document Control Desk, Director, Spent Fuel Project Office, Office of Nuclear Material Safety and Safeguards, U.S. Nuclear Regulatory Commission, Washington, DC 20555-0001, using an appropriate method listed in 10 C.F.R. 71.1(a), before the licensee's first use of the package, the licensee's name and license number and the package identification number specified in the package approval.

(3) The general license identified in subsection (1) of this section shall apply only if the package approval authorizes use of the package under the general license.

(4) For a Type B or fissile material package, the design of which was approved by the NRC before April 1, 1996, the general license shall be subject to additional restrictions contained in Section 7 of this administrative regulation.

Section 7. Previously Approved Type B Packages. (1) A Type B package previously approved by the NRC, but not designated as B(U) or B(M) in the NRC Certificate of Compliance, may be used under the general license of Section 6 of this administrative regulation, with the following limitations:

(a) Fabrication of the packaging was satisfactorily completed before August 31, 1986, as demonstrated by its model number, in accordance with NRC regulations;

(b) The package shall not be used for a shipment to a location outside the United States after August 31, 1986, except under multilateral approval by the U.S. Department of Transportation, as defined in 49 C.F.R. 173.403; and

(2) A serial number that uniquely identifies each package that conforms to the approved design is assigned to, and legibly and durably marked on, the outside of each package.

(3) A Type B(U) package, a Type B(M) package, an LSA material package, or a fissile material package, previously approved by the NRC but without the designation "-85" in the identification number of the NRC Certificate of Compliance, may be used under the general license of Section 6 of this administrative regulation, with the following conditions:

(a) Fabrication of the package shall have been satisfactorily completed by April 1, 1999, as demonstrated by its model number, in accordance with NRC regulations, 10 C.F.R. ***71***;

(b) A package used for shipment to a location outside the United States shall be subject to multilateral approval by the U.S. Department of Transportation, as defined in 49 C.F.R. 173.403; and

(c) A serial number that uniquely identifies each package that conforms to the approved design shall be assigned to, and legibly and durably marked on the outside of, each package.

Section 8. General License: DOT Specification Container. (1) A general license shall be issued to a licensee of the cabinet to transport, or to deliver to a carrier for transport, licensed material in a specification container for fissile material, or for a Type B quantity of radioactive material, as specified in 49 C.F.R. Parts 173 and 178.

(2) The general license shall apply only to a licensee who:

(a) Has a quality assurance program approved by the cabinet as satisfying the requirements of 10 C.F.R. 71.101 through 71.137;

(b) Has a copy of the specification; and

(c) Complies with the terms and conditions of the specification, and the applicable requirements of this administrative regulation and 10 C.F.R. 71.0 through 71.11, 71.81 through 71.100, and 71.101 through 71.137.

(3) The general license shall be subject to the limitation that the specification container shall not be used for a shipment to a location outside the United States except by multilateral approval, as defined in 49 C.F.R. 173.403.

(4) This section expires October 1, 2008.

Section 9. General License: Use of Foreign Approved Package. (1)(a) A general license shall be issued to a licensee of the cabinet to transport, or to deliver to a carrier for transport, licensed material in a package, the design of which has been approved in a foreign national competent authority certificate and revalidated by the U.S. Department of Transportation as meeting the applicable requirements of 49 C.F.R. 171.12.

(b) Except as provided in this section, the general license shall apply only to a licensee who has a quality assurance program approved by the NRC as satisfying the applicable provisions of 10 C.F.R. 71.101 through 71.137.

(2) The general license shall apply only to shipments made to or from locations outside the United States.

(3) The general license shall apply to a licensee who:

(a) Has copies of the applicable certificate, the revalidation, the drawings, and other documents referenced in the certificate relating to the:

1. Use and maintenance of the packaging; and

2. Actions to be taken prior to shipment; and

(b) Complies with the terms and conditions of the certificate and revalidation, and with the applicable requirements of this administrative regulation and 10 C.F.R. 71.0 through 71.11, 71.81 through 71.100, and 71.101 through 71.137.

(4) With respect to the quality assurance provisions of 10 C.F.R. 71.101 through 71.137, the licensee shall be exempt from design, construction, and fabrication considerations.

Section 10. Preliminary Determinations. Before the first use of a packaging for the shipment of radioactive material:

(1) The licensee shall ascertain that there are no cracks, pinholes, uncontrolled voids, or other defects that may significantly reduce the effectiveness of the packaging;

(2) If the maximum normal operating pressure will exceed thirty-five (35) kilopascal (five (5) lbf/in^2) gauge, the licensee shall test the containment system at an internal pressure at least fifty (50) percent higher than the maximum normal operating pressure to verify the capability of that system to maintain its structural integrity at that pressure; and

(3) The licensee shall mark the packaging, conspicuously and durably, with its model number, serial number, gross weight, and a package identification number assigned by the NRC***[, ~~in accordance with 10 C.F.R~~]***. Before applying the model number, the licensee shall determine that the packaging has been fabricated in accordance with the design approved by the NRC.

Section 11. Routine Determinations. Before making a shipment of licensed material, the licensee shall ensure that the package with its contents satisfies the applicable requirements of this administrative regulation and of the license. The licensee shall determine that:

(1) The package is proper for the contents to be shipped;

(2) The package is in unimpaired physical condition except for superficial defects, such as marks or dents;

(3) Each closure device of the packaging, including any required gasket, is properly installed and secured and free of defects;

(4) A system for containing liquid is adequately sealed and has adequate space or other specified provision for expansion of the liquid;

(5) A pressure relief device is operable and set in accordance with written procedures;

(6) The package has been loaded and closed in accordance with written procedures;

(7) For fissile material, any moderator or neutron absorber, if required, is present and in proper condition;

(8) A structural part of the package that could be used to lift or tie down the package during transport is rendered inoperable for that purpose unless it satisfies design requirements specified by 10 C.F.R. 71.45.

(9) The level of nonfixed, or removable, radioactive contamination on the external surfaces of each package offered for shipment is ALARA, and within the limits specified by the U.S. Department of Transportation in 49 C.F.R. 173.443;

(10) External radiation levels around the package and around the vehicle, if applicable, shall not exceed the limits specified in 49 C.F.R. 71.47 during transportation.

(11) Accessible package surface temperatures shall not exceed the limits specified in 10 C.F.R. 71.43(g) at any time during transportation.

Section 12. Air Transport of Plutonium. In addition to the requirements of a general license and exemptions stated in this administrative regulation or included by citation of U.S. Department of Transportation regulations, as may be applicable, the licensee shall assure that plutonium in any form, whether for import, export, or domestic shipment, is not transported by air or delivered to a carrier for air transport unless:

(1) The plutonium is contained in a medical device designed for individual human application;

(2) The plutonium is contained in a material in which the specific activity is less than or equal to the activity concentration values for plutonium specified in 10 C.F.R. 71, Appendix A and in which the radioactivity is essentially uniformly distributed;

(3) The plutonium is shipped in a single package containing no more than an A_2 quantity of plutonium in an isotope or form and is shipped in accordance with Section 4 of this administrative regulation;

(4) The plutonium is shipped in a package specifically authorized for the shipment of plutonium by air in the Certificate of Compliance for that package issued by the NRC; or

(5) For a shipment of plutonium by air which is subject to subsection (4) of this section, the licensee shall, through special arrangement with the carrier, require compliance with 49 C.F.R. 175.704, applicable to the air transport of plutonium;

(6) Nothing in this section shall be interpreted as removing or diminishing the requirements of 10 C.F.R. 73.24.

Section 13. Advance Notification of Transport of Irradiated Reactor Fuel and Nuclear Waste. (1)(a) Before the transport of nuclear waste outside of the confines of the licensee's facility or other place of use or storage, or before the delivery of nuclear waste to a carrier for transport, a licensee shall provide advance notification of the transport to the governor, or governor's designee, of each state through which the waste will be transported.

(b) Advance notification shall be required for shipments of irradiated reactor fuel in quantities less than that subject to advance notification requirements in 10 C.F.R. 73.37(f).

(2) Advance notification shall also be required for licensed material, other than irradiated fuel, if:

(a) The nuclear waste is required to be in Type B packaging for transportation;

(b) The nuclear waste is being transported to, through, or

across a state boundary to a disposal site, or to a collection point for transport to a disposal site; and

(c) The quantity of licensed material in a single package exceeds the least of the following:

1. 3,000 times the A_1 value of the radionuclides as specified in 10 C.F.R. 71, Appendix A for special form radioactive material;

2. 3,000 times the A_2 value of the radionuclides as specified in 10 C.F.R. 71 Appendix A for normal form radioactive material; or

3. 27,000 curies (1000 TBq).

(3) Each advance notification shall be in writing and contain the following information:

(a) The name, address, and telephone number of the shipper, carrier, and receiver of the shipment;

(b) A description of the nuclear waste contained in the shipment as required by 49 C.F.R. 172.202 and 172.203(d);

(c) The point of origin of the shipment and the seven (7) day period during which departure of the shipment is estimated to occur;

(d) The seven (7) day period during which arrival of the shipment at state boundaries is estimated to occur;

(e) The destination of the shipment, and the seven (7) day period during which arrival of the shipment is estimated to occur; and

(f) A point of contact with a telephone number for current shipment information.

(4) The notification shall be made in writing to the office of each appropriate governor or governor's designee and to the cabinet.

(a) A notification delivered by mail shall be postmarked at least seven (7) days before the beginning of the seven (7) day period during which departure of the shipment is estimated to occur.

(b) A notification delivered by messenger shall reach the office of the governor, or governor's designee, at least four (4) days before the beginning of the seven (7) day period during which departure of the shipment is estimated to occur. A copy of the notification shall be retained by the licensee for three (3) years.

(5) The licensee who finds that schedule information previously furnished will not be met, shall telephone a responsible individual in the office of the governor, or governor's designee**,** and the cabinet and inform that individual of the extent of the delay beyond the schedule originally reported. The licensee shall maintain for three (3) years a record of the name of the individual contacted.

(6) A licensee who cancels a nuclear waste shipment, for which advance notification has been sent, shall send a cancellation notice to the governor, or governor's designee, of each appropriate state and to the cabinet. The licensee shall state in the notice that it is a cancellation and shall identify the advance notification that is being cancelled. A copy of the notice shall be retained by the licensee for three (3) years.

Section 14. Exemption from Classification as Fissile Material. Fissile material meeting the requirements of at least one (1) of the subsections (1) through (6) of this section are exempt from classification as fissile material and from the fissile material package standards of 10 C.F.R. 71.55 and 71.59, but are subject to all other requirements of this administrative regulation, except as noted. (1) Individual package containing two (2) grams or less fissile material;

(2) Individual or bulk packaging containing fifteen (15) grams or less of fissile material provided the package has at least 200 grams of solid nonfissile material for every gram of fissile material. Lead, beryllium, graphite, and hydrogenous material enriched in deuterium may be present in the package but shall not be included in determining the required mass for solid nonfissile material;

(3)(a) Low concentrations of solid fissile material commingled with solid nonfissile material, ***if[provided that]***:

1. There is at least 2**,**000 grams of solid nonfissile material for every gram of fissile material; and

2. There is no more than 180 grams of fissile material distributed within 360 kilograms of contiguous nonfissile material.

(b) Lead, beryllium, graphite, and hydrogenous material enriched in deuterium may be present in the package but shall not be included in determining the required mass of solid nonfissile material.

(4) Uranium enriched in uranium-235 to a maximum of one (1) percent by weight, and with total plutonium and uranium content of up to one (1) percent of the mass of uranium-235, provided that the mass of any beryllium, graphite, and hydrogenous material enriched in deuterium constitutes less than five (5) percent of the uranium mass;

(5) Liquid solutions of uranyl nitrate enriched in uranium-235 to a maximum of two (2) percent by mass, with a total plutonium and uranium-233 content not exceeding two one-thousands (0.002) percent of the mass of uranium, and with a minimum nitrogen to uranium atomic ratio (N/U) of two (2). The material shall be contained in at least a DOT Type A package.

(6) Packages containing, individually, a total plutonium mass of not more than 1,000 grams, of which not more than twenty (20) percent by mass may consist of plutonium-239, plutonium-241, or any combination of these radionuclides.

Section 15. General License: Fissile Material (1) A general license is issued to any licensee of the cabinet to transport fissile material, or to deliver fissile material to a carrier for transport, if the material is shipped in accordance with this section of this administration regulation. The fissile material need not be contained in a package which meets the standards of 10 C.F.R. 71.41 through 71.65 and 71.71 through 71.77, however, the material shall be contained in a Type A package. The Type A package shall also meet the DOT requirements of 49 C.F.R. 173.417(a).

(2) The general license shall apply only to a licensee who has a quality assurance program approved by the U.S. Nuclear Regulatory Commission as satisfying the provisions of 10 C.F.R. 71.101 through 71.137.

(3) The general license shall apply only when a package's contents:

(a) Contain less than a Type A quantity of radioactive material; and

(b) Contain less than 500 total grams of beryllium, graphite, or hydrogenous material enriched in deuterium.

(4) The general license shall apply only to packages containing fissile material that are labeled with a Criticality Safety Index (CSI) that:

(a) Has been determined in accordance with subsection (5) of this section;

(b) Has a value less than or equal to ten (10); and

(c) For a shipment of multiple packages containing fissile material, the sum of the CSIs shall be less than or equal to fifty (50), for shipment on a nonexclusive use conveyance, and less than or equal to 100, for shipment on an exclusive use conveyance.

(5)(a) The value for the CSI shall be greater than or equal to the number calculated by the following equation:

$$CSI = 10\left(\frac{\text{grams of U}-235}{X} + \frac{\text{grams of U}-233}{Y} + \frac{\text{grams of Pu}}{Z}\right)$$

(b) The calculated CSI shall be rounded up to the first decimal place;

(c) The values of X, Y, and Z used in the CSI equation shall be taken from 10 C.F.R. Tables 71 – 1 or 71 – 2[~~71 Appendix A, Table A-1 or A.2~~], as appropriate;

(d) If 10 C.F.R. Table 71 - 2[~~Table A-2~~] is used to obtain the value of X, then the values of the terms in the equation for uranium-233 and plutonium shall be assumed to be zero (0); and

(e) 10 C.F.R. Table 71 – 1[~~Table A-1~~] values for X, Y, and Z shall be used to determine the CSI if:

1. Uranium-233 is present in the package;

2. The mass of plutonium exceeds one (1) percent of the mass of uranium-235;

3. The uranium is of unknown uranium-235 enrichment or greater than twenty-four (24) percent enrichment; or

4. Substances having a moderating effectiveness (an average hydrogen density greater than water), such as***[,]*** certain hydrocarbons oils or plastics, are present in any form, except as polyethylene used for packaging or wrapping.

Section 16. General License: Plutonium-beryllium Special Form Material. (1) A general license is issued to any licensee of the cabinet to transport fissile material in the form of plutonium-beryllium (Pu-Be) special form sealed sources, or to deliver Pu-Be sealed sources to a carrier for transport, if the material is shipped in accordance with this section of this administrative regulation. This material need not be contained in a package which meets the standards of 10 C.F.R. 71.41 through 71.65 and 71.71 through 71.77, however, the material shall be contained in a Type A package. The Type A package shall also meet the DOT requirements of 49 C.F.R. 173.417(a).

(2) The general license shall apply only to a licensee who has a quality assurance program approved by the U.S. Nuclear Regulatory Commission as satisfying the provisions of 10 C.F.R. 71 Subpart H.

(3) The general licensee applies only if a package's contents:

(a) Contain less than a Type A quantity of radioactive material; and

(b) Contain less than 1,000 grams of plutonium, provided that plutonium-239, plutonium-241, or any combination of these radionuclides, constitutes less than 240 grams of the total quantity of plutonium in the package.

(4) The general license applies only to packages labeled with a CSI that:

(a) Have been determined in accordance with subsection (5) of this section;

(b) Have a value less than or equal to 100; and

(c) For a shipment of multiple packages containing Pu-Be sealed sources, the sum of the CSIs shall be less than or equal to fifty (50), for shipment on a nonexclusive use conveyance and less than or equal to 100, for shipment on an exclusive use conveyance.

(5)(a) The value for the CSI shall be greater than or equal to the number calculated by the following equation:

$$CSI = 10 \left(\frac{\text{grams of Pu-239 + grams of Pu-241}}{24} \right)$$

(b) The calculated CSI shall be rounded up to the first decimal place.

Section 17. External Radiation Standards for all Packages. (1) Except as provided in subsection (2) of this section, a package of radioactive materials offered for transportation shall be designed and prepared for shipment so that under conditions normally incident to transportation the radiation level shall not exceed 200 millirem/hour (mrem/h) (2 milliservierts/h) (2 mSv/h) at any point on the external surface of the package, and the transport index shall not exceed ten (10).

(2) A package that exceeds the radiation level limits specified in subsection (1) of this section shall be transported by exclusive use shipment only, and the radiation levels for the shipment shall not exceed the following during transportation:

(a) 200 mrem/h (2 mSv/h) on the external surface of the package, unless the following conditions are met, in which case the limit is 1,000 mrem/h (10 mSv/h);

1. The shipment is made in a closed transport vehicle;

2. The package is secured within the vehicle so that its position remains fixed during transportation; and

3. There are no loading or unloading operations between the beginning and end of the transportation;

(b) 200 mrem/h (2 mSv/h) at any point on the outer surface of the vehicle, including the top and underside of the vehicle, or in case of a flat-bed style vehicle, at any point on the vertical planes projected from the outer edges of the vehicle, on the upper surface of the load or enclosure, if used, and on the lower external surface of the vehicle; and

(c)1. Ten (10) mrem/h (0.1 mSv/h) at any point eighty (80) inches (2 meters) from the outer lateral surface of the vehicle, excluding the top and underside of the vehicle; or

2. In the case of a flat-bed style vehicle, an any point six and six tenths (6.6) feet (2 meters) from the vertical planes projected by the outer edges of the vehicle, excluding the top and underside of vehicle; and

(d) Two (2) mrem/h (0.02 mSv/h) in any normally occupied space, except that this provision shall not apply to private carriers, if exposed personnel under their control wear radiation dosimetry devices as required by 902 KAR 100:019, Section 13.

(3) For shipments made under the provisions of subsection (2) of this section, the shipper shall provide specific written instructions to the carrier for maintenance of the exclusive use shipment controls. The instructions shall be included with the shipping paper information.

(4) The written instructions required for exclusive use shipments shall be sufficient so that, ***if***[***when***] followed, they will cause the carrier to avoid actions that will unnecessarily delay delivery or unnecessarily result in increased radiation levels or radiation exposure to transport workers or members of the general public.

Section 18. Assumption as to Unknown Properties. If the isotopic abundance, mass, concentration, degree of moderation, or other pertinent property of fissile material in any package is not known, the licensee shall package the fissile material as if the unknown properties have credible values that will cause the maximum neutron multiplication.

Section 19. Opening Instructions. Before delivery of a package to a carrier for transport, the licensee shall ensure that any special instructions needed to safely open the package have been sent to, or otherwise made available to, the consignee for the consignee's use in accordance with 902 KAR 100:019, Section 28(5).

Section 20. Quality Assurance Requirements. (1) The requirements in Sections 20 through 28 shall apply to design, purchase, fabrication, handling, shipping, storing, cleaning, assembly, inspection, testing, operation, maintenance, repair, and modification of components of packaging important to safety. As used in this administrative regulation, quality assurance comprises all those planned and systematic actions necessary to provide adequate confidence that a system or component will perform satisfactorily in service.

(2) Quality assurance includes quality control, which comprises those quality assurance actions related to control of the physical characteristics and quality of the material or component to predetermined requirements.

(3) The licensee, certificate holder, and applicant for a CoC are responsible for the quality assurance requirements as they apply to design, fabrication, testing, and modification of packaging.

(4) A licensee is responsible for the quality assurance provision that applies to its use of a packaging for the shipment of licensed material subject to this administrative regulation.

(5) A licensee, certificate holder, and applicant for a CoC shall:

(a)[1.] Establish, maintain, and execute a quality assurance program satisfying each of the applicable criteria of 10 C.F.R. 71.101 through 71.137 and satisfying any specific provisions that are applicable to the licensee's activities including procurement of packaging; and

(b)[2.] Execute the applicable criteria in a graded approach to an extent that is commensurate with the quality assurance requirement's importance to safety.

(6) A licensee shall, before the use of a package for the shipment of licensed material subject to this administrative regulation, obtain U.S. Nuclear Regulatory Commission approval of its quality assurance program. Using an appropriate method listed in 10 C.F.R. 71.1(a), a licensee shall file a description of its quality assurance program, including a discussion of which requirements of this administrative regulation are applicable and how they will be satisfied, by submitting the description to: Attention: Document Control Desk, Director, Spent Fuel Project Office, Office of Nuclear Material Safety and Safeguards.

(7) A program for transport container inspection and maintenance limited to radiographic exposure devices, source changers, or packages transporting these devices and meeting the requirements of 902 KAR 100:100, Section 9(3) ***shall***[***is deemed***

~~to~~] satisfy the requirements of Section 6(2)(a) and subsection (5) of this section.

Section 21. Quality Assurance Organization. (1) The licensee, certificate holder, and applicant for a Certificate of Compliance (CoC) shall be responsible for the establishment and execution of the quality assurance program. The licensee, certificate holder, and applicant for a CoC may delegate to others, such as contractors, agents, or consultants, the work of establishing and executing the quality assurance program, or any part of the quality assurance program, but shall retain responsibility for the program. These activities ***shall*** include performing the functions associated with attaining quality objectives and the quality assurance functions.

(2) The quality assurance functions ***shall[~~are~~]***:

(a) ***Assure[~~Assuring~~]*** an appropriate quality assurance program is established and effectively executed; and

(b) ***Verify[~~Verifying~~]***, by procedures such as checking, auditing, and inspection, that activities affecting the functions that are important to safety have been correctly performed.

(3) The persons and organizations performing quality assurance functions shall have sufficient authority and organizational freedom to:

(a) Identify quality problems;

(b) Initiate, recommend, or provide solutions; and

(c) Verify implementation of solutions.

(4) While the term "licensee" is used, the requirements in this section shall be applicable to whatever design, fabrication, assembly, and testing of the package is accomplished with respect to a package before the time a package approval is issued.

Section 22. Quality Assurance Program. (1) The licensee, certificate holder, and applicant for a Certificate of Compliance (CoC) shall establish, at the earliest practicable time consistent with the schedule for accomplishing the activities, a quality assurance program that complies with the requirements of 10 C.F.R. 71.101 through 71.137. The licensee, certificate holder, and applicant for a CoC shall document the quality assurance program by written procedures or instructions and shall carry out the program in accordance with those procedures throughout the period during which the packaging is used. The licensee, certificate holder, and applicant for a CoC shall identify the material and components to be covered by the quality assurance program, the major organizations participating in the program***,*** and the designated functions of these organizations.

(2) The licensee, certificate holder, and applicant for a CoC, through its quality assurance program, shall provide control over activities affecting the quality of the identified materials and components to an extent consistent with their importance to safety, and as necessary to assure conformance to the approved design of each individual package used for the shipment of radioactive material. The licensee, certificate holder, and applicant for a CoC shall assure that activities affecting quality are accomplished under suitably controlled conditions. Controlled conditions ***shall*** include the use of appropriate equipment; suitable environmental conditions for accomplishing the activity, such as adequate cleanliness; and assurance that all prerequisites for the given activity have been satisfied. The licensee, certificate holder, and applicant for a CoC shall take into account the need for special controls, processes, test equipment, tools, and skills to attain the required quality, and the need for verification of quality by inspection and test.

(3) The licensee, certificate holder, and applicant for a CoC shall base the requirements and procedures of its quality assurance program on the following conditions concerning the complexity and proposed use of the package and its components:

(a) The impact of malfunction or failure of the item to safety;

(b) The design and fabrication complexity or uniqueness of the item;

(c) The need for special controls and surveillance over processes and equipment;

(d) The degree to which functional compliance can be demonstrated by inspection or test; and

(e) The quality history and degree of standardization of the item.

(4) The license, certificate holder, and applicant for a CoC shall provide for indoctrination and training of personnel performing activities affecting quality, as necessary, to assure that suitable proficiency is achieved and maintained.

(5) The licensee, certificate holder, and applicant for a CoC shall review the status and adequacy of the quality assurance program at established intervals. Management of other organizations participating in the quality assurance program shall review regularly the status and adequacy of that part of the quality assurance program they are executing.

Section 23. Handling, Storage, and Shipping Control. The licensee, certificate holder, and applicant for a CoC shall establish measures to control, in accordance with instructions, the handling, storage, shipping, cleaning, and preservation of materials and equipment to be used in packaging to prevent damage or deterioration. If necessary for particular products, special protective environments, such as inert gas atmosphere, and specific moisture content and temperature levels shall be specified and provided.

Section 24. Inspection, Test and Operating Status. (1) The licensee, certificate holder, and applicant for a CoC shall establish measures to indicate, by the use of markings such as stamps, tags, labels, routing cards, or other suitable means, the status of inspections and tests performed upon individual items of the packaging. These measures shall provide for the identification of items that have satisfactorily passed required inspections and tests, where necessary to preclude inadvertent by passing of the inspections and tests.

(2) The licensee shall establish measures to identify the operating status of components of the packaging, such as tagging valves and switches, to prevent inadvertent operation.

Section 25. Nonconforming Materials, Parts, or Components. The licensee, certificate holder, and applicant for a CoC shall establish measures to control materials, parts, or components that do not conform to the licensee's requirements to prevent their inadvertent use or installation. These measures shall include, as appropriate, procedures for identification, documentation, segregation, disposition, and notification to affected organizations. Nonconforming items shall be reviewed and accepted, rejected, repaired, or reworked in accordance with documented procedures.

Section 26. Corrective Action. The licensee, certificate holder, and applicant for a CoC shall establish measures to assure that conditions adverse to quality, such as deficiencies, deviations, defective material and equipment, and nonconformances, are promptly identified and corrected. ***If[~~In the case of~~]*** a significant condition adverse to quality ***exists***, the measures shall assure that the cause of the condition is determined and corrective action taken to preclude repetition. The identification of the significant condition adverse to quality, the cause of the condition, and the corrective action taken shall be documented and reported to appropriate levels of management.

Section 27. Quality Assurance Records. (1) The licensee, certificate holder, and applicant for a CoC shall maintain sufficient written records to describe the activities affecting quality. The records shall include the instructions, procedures, and drawings required by 10 C.F.R. 71.111 to prescribe quality assurance activities and shall include closely related specifications such as required qualifications of personnel, procedures, and equipment.

(2) The records shall include the instructions or procedures that establish a records retention program that is consistent with applicable regulations and designates factors such as duration, location, and assigned responsibility.

(3) The licensee, certificate holder, and applicant for a CoC shall retain these records for three (3) years beyond the date when the licensee, certificate holder, applicant for a CoC last engage in the activity for which the quality assurance program was developed. If any portion of the written procedures or instructions is

superseded, the licensee, certificate holder, and applicant for CoC shall retain the superseded material for three (3) years after it is superseded.

Section 28. Audits. (1) The licensee, certificate holder, and applicant for a CoC shall carry out a comprehensive system of planned and periodic audits to verify compliance with all aspects of the quality assurance program and to determine the effectiveness of the program.

(2) The audits shall be performed in accordance with written procedures or checklists by appropriately trained personnel not having direct responsibilities in the areas being audited.

(3) Audited records shall be documented and reviewed by management having responsibility in the area audited.

(4) Follow-up action, including reaudit of deficient areas, shall be taken as indicated.

Section 29. Determination of A_1 and A_2. [~~(1)~~] Values of A_1 and A_2 shall be determined as described in 10 C.F.R. 71 Appendix A.

STEPHANIE MAYFIELD GIBSON, MD, FCAP, Commissioner
AUDREY TAYSE HAYNES, Secretary

APPROVED BY AGENCY: September 11, 2014

FILED WITH LRC: September 15, 2014 at 11 a.m.

CONTACT PERSON: Tricia Orme, Office of Legal Services, 275 East Main Street 5 W-B, Frankfort, Kentucky 40601, phone 502/564-7905, fax 502/564-7573, email tricia.orme@ky.gov.

CABINET FOR HEALTH AND FAMILY SERVICES
Department for Public Health
Public Health Protection and Safety
(As Amended at ARRS, December 9, 2014)

902 KAR 100:072. Use of radionuclides in the health arts.

RELATES TO: KRS 211.842 to 211.852, 211.990(4), 10 C.F.R. 35, 45 C.F.R. 46

STATUTORY AUTHORITY: KRS 194A.050, 211.090, 211.844, 10 C.F.R. 35

NECESSITY, FUNCTION, AND CONFORMITY: KRS 211.844 requires the Cabinet for Health and Family Services to promulgate administrative regulations for the registration and licensing of the possession or use of sources of ionizing or electronic product radiation and the handling and disposal of radioactive waste. This administrative regulation establishes requirements and provisions for the use of radioactive material in the healing arts, for issuance of licenses authorizing the medical use of radioactive material and for specific licensees to possess, use, and transfer radioactive material for medical uses.

Section 1. Implementation. (1) A licensee shall implement the provisions in this administrative regulation on or before October 24, 2005, with the exception of the requirements listed in subsection (2) of this section.

(2) A licensee shall implement the training requirements in Sections 63, 64, 65, 66, 67, 68, 69, 70, 71, 72, 73, 74, 75, 76, and 77 of this administrative regulation on or before October 25, 2007.

(3) Prior to October 25, 2007, a licensee shall satisfy the training requirements of this administrative regulation for a radiation safety officer, an authorized medical physicist, an authorized nuclear pharmacist, or an authorized user by complying with either:

(a) The appropriate training requirements in Sections 63, 64, 65, 66, 67, 68, 69, 70, 71, 72, 73, 74, 75, 76, and 77 of this administrative regulation; or

(b) The appropriate training requirements in Section 78 of this administrative regulation.

(4) If a license condition exempted a licensee from a provision of this administrative regulation on October 24, 2005, then the license condition continues to exempt the licensee from the provision of 902 KAR 100:072.

(5) If a requirement in this administrative regulation differs from the requirement in an existing license condition, the requirement in this administrative regulation shall govern.

(6) A licensee shall continue to comply with any license condition that requires it to implement procedures required by Sections 49, 55, 56, and 57 of this administrative regulation until there is a license amendment or renewal that modifies the license condition.

Section 2. License Required. (1) A person may manufacture, produce, acquire, receive, possess, prepare, use, or transfer radioactive material for medical use only in accordance with a specific license issued by the cabinet, the U.S. Nuclear Regulatory Commission, or another agreement state, or as allowed in subsection (2)(a) or (b) of this section.

(2) A specific license is not required for an individual who:

(a) Receives, possesses, uses, or transfers radioactive material in accordance with the administrative regulations in this chapter under the supervision of an authorized user as provided in Section 12 of this administrative regulation unless prohibited by license condition; or

(b) Prepares unsealed radioactive material for medical use in accordance with the administrative regulations in this chapter under the supervision of an authorized nuclear pharmacist or authorized user as provided in Section 12 of this administrative regulation unless prohibited by license condition.

Section 3. Maintenance of Records. Each record required by this administrative regulation shall be legible throughout the retention period specified by each section. The record shall be the original or a reproduced copy or a microform if the copy or microform is authenticated by authorized personnel and the microform is capable of producing a clear copy throughout the required retention period. The record may also be stored in electronic media with the capability for producing legible, accurate, and complete records during the required retention period. Records such as letters, drawings, and specifications shall include all pertinent information such as stamps, initials, and signatures. The licensee shall maintain adequate safeguards against tampering with and loss of records.

Section 4. Application for License, Amendment, or Renewal. (1) An application shall be signed by the applicant's or licensee's management.

(2) An application for a license for medical use of radioactive material as described in Sections 30, 31, 33, 37, 45, 46 and 62 of this administrative regulation and shall be made by:

(a) Filing an original and one (1) copy of Form RPS-7, Application for Radioactive Material License, that includes the facility diagram, equipment, and training and experience qualifications of the radiation safety officer, authorized user, authorized medical physicist, and authorized nuclear pharmacist; and

(b) Submitting procedures required by Sections 49, 55, 56, and 57, of this administrative regulation as applicable.

(3) A request for a license amendment or renewal shall be made by:

(a) Submitting an original and one (1) copy of either:

1. Form RPS-7, Application for Radioactive Material License; or

2. A letter requesting the amendment or renewal; and

(b) Submitting procedures required by Sections 49, 55, 56, and 57 of this administrative regulation as applicable.

(4) In addition to the requirements in subsections (2) and (3) of this section, an application for a license or amendment for medical use of radioactive material as described in Section 62 of this administrative regulation shall also include information regarding any radiation safety aspects of the medical use of the material that is unique to the evolving technology.

(a) The applicant shall also provide specific information on:

1. Radiation safety precautions and instructions;

2. Methodology for measurement of dosages or doses to be administered to patients or human research subjects; and

3. Calibration, maintenance, and repair of instruments and

equipment necessary for radiation safety.

(b) The applicant or licensee shall provide information requested by the cabinet as necessary to complete its review of the application.

(5) An applicant that satisfies the requirements specified in 902 KAR 100:052 of this chapter may apply for a Type A specific license of broad scope.

Section 5. License Amendments. A licensee shall apply for and receive a license amendment:

(1) Before the licensee receives, prepares, or uses radioactive material for a type of use that is permitted under this chapter, but that is not authorized on the licensee's current license issued under this chapter;

(2) Before the licensee permits anyone to work as an authorized user, authorized nuclear pharmacist, or authorized medical physicist under the license, except:

(a) For an authorized user, an individual who meets the requirements in Sections 63, 68(1), 69(1), 70(1), 71(1), 72(1), 74(1), 76(1), 77(1), 78(2)(a), 78(3)(a), 78(4)(a), 78(7)(a), 78(9)(a), and 78(10)(a) of this administrative regulation;

(b) For an authorized nuclear pharmacist, an individual who meets the requirements in Sections 63 and 66(1) or 78(12)(a);

(c) For an authorized medical physicist, an individual who meets the requirements in Sections 63 and 65(1) or 78(11)(a) or (b) of this administrative regulation;

(d) An individual who is identified as an authorized user, an authorized nuclear pharmacist, or authorized medical physicist:

1. On a cabinet, an agreement state, or U.S. Nuclear Regulatory Commission license or other equivalent permit or license recognized by the cabinet that authorizes the use of radioactive material in medical use or in the practice of nuclear pharmacy;

2. On a permit issued by the cabinet, an agreement state, or U.S. Nuclear Regulatory Commission specific license of broad scope that is authorized to permit the use of radioactive material in medical use or in the practice of nuclear pharmacy;

3. On a permit issued by a U.S. Nuclear Regulatory Commission master material licensee that is authorized to permit the use of radioactive material in medical use or in the practice of nuclear pharmacy; or

4. By a commercial nuclear pharmacy that has been authorized to identify authorized nuclear pharmacists.

(3) Before it changes radiation safety officers, except as provided in Section 10(3) of this administrative regulation;

(4) Before it receives radioactive material in excess of the amount or in a different form, or receives a different radionuclide than is authorized on the license;

(5) Before it adds to or changes the areas of use identified in the application or on the license, except for areas of use where radioactive material is used only in accordance with either Section 30 or 31 of this administrative regulation;

(6) Before it changes the address of use identified in the application or on the license; or

(7) Before it revises procedures required by Sections 49, 55, 56 and 57 of this administrative regulation as applicable, where the revision reduces radiation safety; and

(8) Before conducting research involving human research subjects using radioactive material.

Section 6. Notifications. (1) A licensee shall provide the cabinet a copy of the board certification, the cabinet, U.S. Nuclear Regulatory Commission or agreement state license, the permit issued by a U.S. Nuclear Regulatory Commission master material licensee, the permit issued by a cabinet, U.S. Nuclear Regulatory Commission, or equivalent agreement state licensee of broad scope, or the permit issued by a U.S. Nuclear Regulatory Commission master material license broad scope permittee for each individual no later than thirty (30) days after the date that the licensee permits the individual to work as an authorized user, an authorized nuclear pharmacist, or an authorized medical physicist under Section 5(2)(a) through (d) of this administrative regulation.

(2) A licensee shall notify the cabinet by letter no later than thirty (30) days after:

(a) An authorized user, an authorized nuclear pharmacist, a radiation safety officer, or an authorized medical physicist permanently discontinues performance of duties under the license or has a name change;

(b) The licensee's mailing address changes;

(c) The licensee's name changes, but the name change does not constitute a transfer of control of the license as described in 902 KAR 100:040, Section 6(2) of this chapter; or

(d) The licensee has added to or changed the areas of use identified in the application or on the license if radioactive material is used in accordance with either Section 30 or 31 of this administrative regulation.

(3) The licensee shall mail the documents required in this section to the Cabinet for Health and Family Services, Radiation Health Branch, Manager, 275 East Main
Street, Mailstop HS1C-A, Frankfort, Kentucky 40621.

Section 7. Exemptions Regarding Type A Specific Licenses of Broad Scope. A licensee possessing a Type A specific license of broad scope for medical use, issued under 902 KAR 100:052 of this chapter, is exempt from:

(1) Section 4(4) of this administrative regulation regarding the need to file an amendment to the license for medical use of radioactive material, as described in Section 62 of this administrative regulation;

(2) The provisions of Section 5(2) of this administrative regulation;

(3) The provisions of Section 5(5) of this administrative regulation regarding additions to or changes in the areas of use at the addresses identified in the application or on the license;

(4) The provisions of Section 6(1) of this administrative regulation;

(5) The provisions of Section 6(2)(a) of this administrative regulation for an authorized user, an authorized nuclear pharmacist, or an authorized medical physicist;

(6) The provisions of Section 6(2)(d) of this administrative regulation regarding additions to or changes in the areas of use identified in the application or on the license if radioactive material is used in accordance with either Section 30 or 31 of this administrative regulation; and

(7) The provisions of Section 36(1) of this administrative regulation.

Section 8. License Issuance. (1) The cabinet shall issue a license for the medical use of radioactive material if:

(a) The applicant has filed RPS-7 Application for Radioactive Material License in accordance with the instructions in Section 4 of this administrative regulation;

(b) The applicant has paid any applicable fee as provided in 902 KAR 100:012 of this chapter;

(c) The cabinet finds the applicant equipped and committed to observe the safety standards established by the cabinet in this Chapter for the protection of the public health and safety; and

(d) The applicant meets the requirements of 902 KAR 100:040, 100:041, 100:042, and 100:045 of this chapter.

(2) The cabinet shall issue a license for mobile medical service if the applicant:

(a) Meets the requirements in subsection (1) of this section; and

(b) Assures that individuals or human research subjects to whom unsealed radioactive material or radiation from implants containing radioactive material will be administered may be released following treatment in accordance with Section 27 of this administrative regulation.

Section 9. Specific Exemptions. The cabinet may, as established in 10 C.F.R. 35.19, upon application of any interested person or upon its own initiative, grant exemptions from the administrative regulations in this chapter that it determines are authorized by law and will not endanger life or property or the common defense and security and are otherwise in the public interest.

Section 10. Authority and Responsibilities for the Radiation Protection Program. (1) In addition to the radiation protection program requirements of 902 KAR 100:019 of this administrative regulation, a licensee's management shall approve in writing:

(a) Requests for a license application, renewal, or amendment before submittal to the cabinet;

(b) Any individual before allowing that individual to work as an authorized user, authorized nuclear pharmacist, or authorized medical physicist; and

(c) Radiation protection program changes that do not require a license amendment and are permitted in under Section 11 of this administrative regulation.

(2) A licensee's management shall appoint a radiation safety officer, who agrees, in writing, to be responsible for implementing the radiation protection program. The licensee, through the radiation safety officer, shall ensure that radiation safety activities are being performed in accordance with licensee-approved procedures and regulatory requirements.

(3) For up to sixty (60) days each year, a licensee may permit an authorized user or an individual qualified to be a radiation safety officer, under Sections 63 and 64, of this administrative regulation to function as a temporary radiation safety officer and to perform the functions of a radiation safety officer, as provided in subsection (7) of this section, if the licensee takes the actions required in subsections (2), (5), (7), and (8) of this section and notifies the cabinet in accordance with Section 6 of this administrative regulation.

(4) A licensee may simultaneously appoint more than one (1) temporary radiation safety officer in accordance with subsection (3) of this section, if needed to ensure that the licensee has a temporary radiation safety officer that satisfies the requirements to be a radiation safety officer for each of the different types of uses of radioactive material permitted by the license.

(5) A licensee shall establish the authority, duties, and responsibilities of the radiation safety officer in writing.

(6) A licensee authorized for two (2) or more different types of uses of radioactive material under Sections 33, 37, and 46 of this administrative regulation or two (2) or more types of units under Section 46 of this administrative regulation shall establish a Radiation Safety Committee to oversee all uses of radioactive material permitted by the license. The committee shall include an authorized user of each type of use permitted by the license, the radiation safety officer, a representative of the nursing service, and a representative of management who is neither an authorized user nor a radiation safety officer. The committee may include other members the licensee considers appropriate.

(7) A licensee shall provide the radiation safety officer sufficient authority, organizational freedom, time, resources, and management prerogative to:

(a) Identify radiation safety problems;

(b) Initiate, recommend, or provide corrective actions;

(c) Stop unsafe operations; and

(d) Verify implementation of corrective actions.

(8) A licensee shall retain a record of actions taken under subsections (1), (2), and (5) of this section as follows:

(a) A licensee shall retain a record of actions taken by the licensee's management in accordance with subsection (1) of this section, for five (5) years. The record shall include a summary of the actions taken and a signature of licensee management.

(b) The licensee shall retain a copy of both authority, duties, and responsibilities of the radiation safety officer, as required in subsection (5) of this section, and a signed copy of each radiation safety officer's agreement to be responsible for implementing the radiation safety program, as required in subsection (5) of this section, for the duration of the license. The records shall include the signature of the radiation safety officer and licensee management.

Section 11. Radiation Protection Program Changes. (1) A licensee may revise its radiation protection program without cabinet approval if:

(a) The revision does not require a license amendment under Section 5 of this administrative regulation;

(b) The revision is in compliance with 902 KAR Chapter 100 and the license;

(c) The revision has been reviewed and approved by the radiation safety officer and licensee management; and

(d) The affected individuals are instructed on the revised program before the changes are implemented.

(2) A licensee shall retain a record of each radiation protection program change made in accordance with subsection (1) of this section for five (5) years. The record shall include a copy of the old and new procedures, the effective date of the change, and the signature of the licensee management that reviewed and approved the change.

Section 12. Supervision. (1) A licensee that permits the receipt, possession, use, or transfer of radioactive material by an individual under the supervision of an authorized user, as allowed by Section 2(2)(a) of this administrative regulation shall:

(a) In addition to the requirements in 902 KAR 100:165, instruct the supervised individual in the licensee's written radiation protection procedures, written directive procedures, administrative regulations of this chapter, and license conditions with respect to the use of radioactive material; and

(b) Require the supervised individual to follow the instructions of the supervising authorized user for medical uses of radioactive material, written radiation protection procedures established by the licensee, written directive procedures, administrative regulations of this chapter, and license conditions with respect to the medical use of radioactive material.

(2) A licensee that permits the preparation of radioactive material for medical use by an individual under the supervision of an authorized nuclear pharmacist or physician who is an authorized user, as allowed by Section 2(2)(b) of this administrative regulation shall:

(a) In addition to the requirements in 902 KAR 100:165, instruct the supervised individual in the preparation of radioactive material for medical use, as appropriate to that individual's involvement with radioactive material; and

(b) Require the supervised individual to follow the instructions of the supervising authorized user or authorized nuclear pharmacist regarding the preparation of radioactive material for medical use, written radiation protection procedures established by the licensee, the administrative regulations of this chapter, and license conditions.

(3) A licensee that permits supervised activities under subsections (1) and (2) of this section is responsible for the acts and omissions of the supervised individual.

Section 13. Written Directives. (1) A written directive shall be dated and signed by an authorized user before the administration of I-131 sodium iodide greater than 1.11 Megabecquerels (MBq) (Thirty (30) microcuries (μCi)), any therapeutic dosage of unsealed radioactive material or any therapeutic dose of radiation from radioactive material.

(a) If, because of the emergent nature of the patient's condition, a delay in order to provide a written directive would jeopardize the patient's health, an oral directive shall be acceptable. The information contained in the oral directive shall be documented as soon as possible in writing in the patient's record.

(b) A written directive shall be prepared within forty-eight (48) hours of the oral directive.

(2) The written directive shall contain the patient or human research subject's name and the following information:

(a) For any administration of quantities greater than 1.11 MBq (30 μCi) of sodium iodide I-131: the dosage;

(b) For an administration of a therapeutic dosage of unsealed radioactive material other than sodium iodide I-131: the radioactive drug, dosage, and route of administration;

(c) For gamma stereotactic radiosurgery: the total dose, treatment site, and values for the target coordinate settings per treatment for each anatomically distinct treatment site;

(d) For teletherapy: the total dose, dose per fraction, number of fractions, and treatment site;

(e) For high dose-rate remote afterloading brachytherapy: the

radionuclide, treatment site, dose per fraction, number of fractions, and total dose; or

(f) For all other brachytherapy, including low, medium, and pulsed dose rate remote afterloaders:

1. Before implantation: treatment site, the radionuclide, and dose; and

2. After implantation but before completion of the procedure: the radionuclide, treatment site, number of sources, and total source strength and exposure time (or the total dose).

(3) A written revision to an existing written directive may be made if the revision is dated and signed by an authorized user before the administration of the dosage of unsealed radioactive material, the brachytherapy dose, the gamma stereotactic radiosurgery dose, the teletherapy dose, or the next fractional dose.

(a) If, because of the patient's condition, a delay in order to provide a written revision to an existing written directive would jeopardize the patient's health, an oral revision to an existing written directive shall be acceptable. The oral revision shall be documented as soon as possible in the patient's record.

(b) A revised written directive shall be signed by the authorized user within forty-eight (48) hours of the oral revision.

(4) The licensee shall retain a copy of the written directive as required by this section for three (3) years.

Section 14. Procedures for Administrations Requiring a Written Directive. (1) For any administration requiring a written directive, the licensee shall develop, implement, and maintain written procedures to provide high confidence that:

(a) The patient's or human research subject's identity is verified before each administration; and

(b) Each administration is in accordance with the written directive.

(2) At a minimum, the procedures required by subsection (1) of this section shall address the following items that are applicable to the licensee's use of radioactive material:

(a) Verifying the identity of the patient or human research subject;

(b) Verifying that the administration is in accordance with the treatment plan, if applicable, and the written directive;

(c) Checking both manual and computer-generated dose calculations; and

(d) Verifying that any computer-generated dose calculations are correctly transferred into the consoles of therapeutic medical units authorized by Section 46 or 62 of this administrative regulation.

(3) A licensee shall retain a copy of the procedures required under subsection (1) for the duration of the license.

Section 15. Report and Notification of Medical Events. (1) A licensee shall report any event, except for an event that results from patient intervention, in which the administration of radioactive material or radiation from radioactive material results in:

(a) A dose that differs from the prescribed dose or dose that would have resulted from the prescribed dosage by more than 0.05 Sv (5 rem) effective dose equivalent, five-tenths (0.5) Sv (50 rem) to an organ or tissue, or five-tenths (0.5) Sv (50 rem) shallow dose equivalent to the skin; and

1. The total dose delivered differs from the prescribed dose by twenty (20) percent or more;

2. The total dosage delivered differs from the prescribed dosage by twenty (20) percent or more or falls outside the prescribed dosage range; or

3. The fractionated dose delivered differs from the prescribed dose, for a single fraction, by fifty (50) percent or more.

(b) A dose that exceeds 0.05 Sv (5 rem) effective dose equivalent, five-tenths (0.5) Sv (50 rem) to an organ or tissue, or five-tenths (0.5) Sv (50 rem) shallow dose equivalent to the skin from any of the following:

1. An administration of a wrong radioactive drug containing radioactive material;

2. An administration of a radioactive drug containing radioactive material by the wrong route of administration;

3. An administration of a dose or dosage to the wrong individual or human research subject;

4. An administration of a dose or dosage delivered by the wrong mode of treatment; or

5. A leaking sealed source.

(c) A dose to the skin or an organ or tissue other than the treatment site that exceeds by five-tenths (0.5) Sv (fifty (50) rem) to an organ or tissue and fifty (50) percent or more of the dose expected from the administration defined in the written directive (excluding, for permanent implants, seeds that were implanted in the correct site but migrated outside the treatment site).

(2) A licensee shall report any event resulting from intervention of a patient or human research subject in which the administration of radioactive material or radiation from radioactive material results or will result in unintended permanent functional damage to an organ or a physiological system, as determined by a physician.

(3) The licensee shall notify the cabinet by telephone no later than the next calendar day after discovery of the medical event. The commercial telephone number of the Cabinet for Health and Family Services, Radiation Health Branch is (502) 564-3700. The twenty-four (24) hour emergency number is (800) 255-2587.

(4) The licensee shall submit a written report to the Cabinet for Health and Family Services, Radiation Health Branch, Manager, 275 East Main Street, Mailstop HS1C-A, Frankfort, Kentucky 40621, within fifteen (15) days after discovery of the medical event.

(a) The written report shall include:

1. The licensee's name;

2. The name of the prescribing physician;

3. A brief description of the event;

4. Why the event occurred;

5. The effect, if any, on the individual who received the administration;

6. What actions, if any, have been taken or are planned to prevent recurrence; and

7. Certification that the licensee notified the individual (or the individual's responsible relative or guardian), and if not, why not.

(b) The report shall not contain the individual's name or any other information that could lead to identification of the individual.

(5)***(a)1.*** The licensee shall provide notification of the event to the referring physician and also notify the individual who is the subject of the medical event no later than twenty-four (24) hours after its discovery, unless the referring physician personally informs the licensee either that he or she will inform the individual or that, based on medical judgment, telling the individual would be harmful. The licensee shall not be required to notify the individual without first consulting the referring physician. If the referring physician or the affected individual cannot be reached within twenty-four (24) hours, the licensee shall notify the individual as soon as possible thereafter.

2.[~~The licensee shall not delay any appropriate medical care for the individual, including any necessary remedial care as a result of the medical event, because of any delay in notification. To meet the requirements of this subsection,~~] The notification of the individual who is the subject of the medical event may be made instead to that individual's responsible relative or guardian***;***

(b)[~~.~~] If a verbal notification is made, the licensee shall inform the individual, or appropriate responsible relative or guardian, that a written description of the event can be obtained from the licensee upon request. The licensee shall provide this written description if requested***; and***

(c) The licensee shall not delay any appropriate medical care for the individual including any necessary remedial care as a result of the medical event, because of any delay in notification.

(6) Aside from the notification requirement, ***[~~nothing in~~]***this section shall ***not*** affect any rights or duties of licensees and physicians in relation to each other, to individuals affected by the medical event, or to that individual's responsible relatives or guardians.

(7) A licensee shall:

(a) Annotate a copy of the report provided to the cabinet with the:

1. Name of the individual who is the subject of the event; and

2. Social Security number or other identification number, if one (1) has been assigned, of the individual who is the subject of the event; and

(b) Provide a copy of the annotated report to the referring physician, if other than the licensee, no later than fifteen (15) days after the discovery of the event.

Section 16. Report and Notification of a Dose to an Embryo/fetus or a Nursing Child. (1) A licensee shall report any dose to an embryo/fetus that is greater than fifty (50) mSv (five (5) rem) dose equivalent that is a result of an administration of radioactive material or radiation from radioactive material to a pregnant individual unless the dose to the embryo/fetus was specifically approved, in advance, by the authorized user.

(2) A licensee shall report any dose to a nursing child that is a result of an administration of radioactive material to a breast-feeding individual that:

(a) Is greater than fifty (50) mSv (five (5) rem) total effective dose equivalent; or

(b) Has resulted in unintended permanent functional damage to an organ or a physiological system of the child, as determined by a physician.

(3) The licensee shall notify the cabinet by telephone no later than the next calendar day after discovery of a dose to the embryo/fetus or nursing child that requires a report in subsections (1) or (2) of this section. The commercial telephone number of the Cabinet for Health and Family Services, Radiation Health Branch is (502) 564-3700. The twenty-four (24) hour emergency number is (800) 255-2587.

(4) The licensee shall submit a written report to the Cabinet for Health and Family Services, Radiation Health Branch, Manager, 275 East Main Street, Mailstop HS1C-A, Frankfort, Kentucky 40621, within fifteen (15) days after discovery of a dose to the embryo/fetus or nursing child that requires a report in subsections (1) or (2) in this section.

(a) The written report shall include:

1. The licensee's name;

2. The name of the prescribing physician;

3. A brief description of the event;

4. Why the event occurred;

5. The effect, if any, on the embryo or fetus or the nursing child;

6. What actions, if any, have been taken or are planned to prevent recurrence; and

7. Certification that the licensee notified the pregnant individual or mother (or the mother's or child's responsible relative or guardian), and if not, why not.

(b) The report shall not contain the individual's or child's name or any other information that could lead to identification of the individual or child.

(5)***(a)1.*** The licensee shall provide notification of the event to the referring physician and also notify the pregnant individual or mother, both hereafter referred to as the mother, no later than twenty-four (24) hours after discovery of an event that would require reporting under subsection (1) or (2) of this section, unless the referring physician personally informs the licensee either that he or she will inform the mother or that, based on medical judgment, telling the mother would be harmful. The licensee shall not be required to notify the mother without first consulting with the referring physician. If the referring physician or mother cannot be reached within twenty-four (24) hours, the licensee shall make the appropriate notifications as soon as possible thereafter.

2.[~~The licensee shall not delay any appropriate medical care for the embryo or fetus or for the nursing child, including any necessary remedial care as a result of the event, because of any delay in notification. To meet the requirements of this paragraph,~~] The notification may be made to the mother's or child's responsible relative or guardian instead of the mother. If a verbal notification is made, the licensee shall inform the mother, or the mother's or child's responsible relative or guardian, that a written description of the event can be obtained from the licensee upon request. The licensee shall provide this written description if requested***; and***

(b) The licensee shall not delay any appropriate medical care for the embryo or fetus or for the nursing child, including any necessary remedial care as a result of the event, because of any delay in notification.

(6) A licensee shall:

(a) Annotate a copy of the report provided to the cabinet with the:

1. Name of the pregnant individual or the nursing child who is the subject of the event; and

2. Social Security number or other identification number, if one (1) has been assigned, of the pregnant individual or the nursing child who is the subject of the event; and

(b) Provide a copy of the annotated report to the referring physician, if other than the licensee, no later than fifteen (15) days after the discovery of the event.

Section 17. Provisions for the Protection of Human Research Subjects. (1) A licensee may conduct research involving human research subjects only if it uses the radioactive materials specified on its license for the uses authorized on its license.

(2) If the research is conducted, funded, supported, or regulated by another federal agency that has implemented the Federal Policy for the Protection of Human Subjects, 45 C.F.R. Part 46, the licensee shall, before conducting research:

(a) Obtain review and approval of the research from an Institutional Review Board, as defined and described in the Federal Policy for the Protection of Human Subjects, 45 C.F.R. Part 46; and

(b) Obtain informed consent, as defined and described in the Federal Policy for the Protection of Human Subjects, 45 C.F.R. Part 46, from the human research subject.

(3) If the research will not be conducted, funded, supported, or regulated by another federal agency that has implemented the Federal Policy, the licensee, shall before conducting research, apply for and receive a specific amendment to its cabinet medical use license. The amendment request shall include a written commitment that the licensee shall, before conducting research:

(a) Obtain review and approval of the research from an Institutional Review Board, as defined and described in the Federal Policy for the Protection of Human Subjects, 45 C.F.R. Part 46; and

(b) Obtain "informed consent", as defined and described in the Federal Policy, form the human research subject.

(4) ***[~~Nothing in~~]***This section ***shall not relieve[~~relieves~~]*** the licensees from complying with the other requirements in this administrative regulation.

Section 18. Report of a Leaking Source. A licensee shall file a report within five (5) days if a leak test required by Section 24, of this administrative regulation reveals the presence of 185 Bq (0.005 µCi) or more of removable contamination. The report shall be filed with the Cabinet for Health and Family Services, Radiation Health Branch, Manager, 275 East Main Street, Frankfort, Kentucky 40621. The written report shall include the model number and serial number, if assigned, of the leaking source; the radionuclide and its estimated activity; the results of the test; the date of the test; and the action taken.

Section 19. Quality Control of Diagnostic Equipment. A licensee shall establish written quality control procedures for diagnostic equipment used for radionuclide studies. (1) As a minimum, the procedures shall include:

(a) Quality control procedures recommended by equipment manufacturers; or

(b) Procedures ***submitted by the licensee and*** approved by the cabinet.

(2) The licensee shall conduct quality control procedures in accordance with written procedures.

Section 20. Possession, Use, and Calibration of Instruments Used to Measure the Activity of Unsealed Radioactive Material. (1) For direct measurements performed in accordance with Section

22, of this administrative regulation a licensee shall possess and use instrumentation to measure the activity of unsealed radioactive material before it is administered to each patient or human research subject.

(2) A licensee shall calibrate the instrumentation required in subsection (1) of this section in accordance with nationally-recognized standards or the manufacturer's instructions.

(3) A licensee shall maintain a record of instrument calibrations, required by this section, for three (3) years. The records shall include the model and serial number of the instrument, the date of the calibration, the results of the calibration, and the name of the individual who performed the calibration.

Section 21. Calibration of Survey Instruments. (1) A licensee shall calibrate the survey instruments used to show compliance with this administrative regulation and 902 KAR 100:019 before first use, annually, and following a repair that affects the calibration. A licensee shall:

(a) Calibrate all scales with readings up to ten (10) mSv (1,000 mrem) per hour with a radiation source;

(b) Calibrate two (2) separated readings on each scale or decade that will be used to show compliance; and

(c) Conspicuously note on the instrument the apparent dose rate from a dedicated check source as determined at the time of calibration, and the date of calibration.

(2) A licensee shall not use survey instruments if the difference between the indicated exposure rate and the calculated exposure rate is more than twenty (20) percent.

(3) A licensee shall maintain a record of each radiation survey instrument calibrations for three (3) years. The record shall include the model and serial number of the instrument, the date of the calibration, the results of the calibration, and the name of the individual who performed the calibration.

Section 22. Determination of Dosages of Unsealed Radioactive Material for Medical Use. (1) A licensee shall determine and record the activity of each dosage before medical use.

(2) For a unit dosage, this determination shall be made by:

(a) Direct measurement of radioactivity; or

(b) A decay correction, based on the activity or activity concentration determined by:

1. A manufacturer or preparer licensed pursuant to 902 KAR 100:040 and 902 KAR 100:058, U.S. Nuclear Regulatory Commission, or equivalent agreement state requirements; or

2. A cabinet, U.S. Nuclear Regulatory Commission, or equivalent agreement state license for use in research in accordance with a Radioactive Drug Research Committee-approved protocol or an Investigational New Drug (IND) protocol accepted by FDA***[;]***

(3) For other than unit dosages, this determination shall be made by:

(a) Direct measurement of radioactivity;

(b) Combination of measurement of radioactivity and mathematical calculations; or

(c) Combination of volumetric measurements and mathematical calculations, based on the measurement made by a manufacturer or preparer licensed pursuant to 902 KAR 100:040 and 902 KAR 100:058, U.S. Nuclear Regulatory Commission, or equivalent agreement state requirements.[~~; or~~]

(4) Unless otherwise directed by the authorized user, a licensee shall not use a dosage if the dosage does not fall within the prescribed dosage range or if the dosage differs from the prescribed dosage by more than twenty (20) percent.

(5) A licensee shall retain a record of the dosage determination, required by this section, for three (3) years. The record shall contain:

(a) The radiopharmaceutical;

(b) The patient's or human research subject's name, or identification number if one (1) has been assigned;

(c) The prescribed dosage, the determined dosage, or a notation that the total activity is less than 1.11 MBq (30 µCi);

(d) The date and time of the dosage determination; and

(e) The name of the individual who determined the dosage.

Section 23. Authorization for Calibration, Transmission, and Reference Sources. Any person authorized by Section 2 of this administrative regulation for medical use of radioactive material may receive, possess, and use any of the following radioactive material for check, calibration, transmission, and reference use. (1) Sealed sources, not exceeding 1.11 GBq (30 mCi) each, manufactured and distributed by a person licensed pursuant to 902 KAR 100:040 and 902 KAR 100:058, U.S. Nuclear Regulatory Commission, or equivalent agreement state requirements.

(2) Sealed sources, not exceeding 1.11 GBq (30 mCi) each, redistributed by a licensee authorized to redistribute the sealed sources manufactured and distributed by a person licensed pursuant to 902 KAR 100:040 and 902 KAR 100:058, U.S. Nuclear Regulatory Commission, or equivalent agreement state requirements, providing the redistributed sealed sources are in the original packaging and shielding and are accompanied by the manufacturer's approved instructions.

(3) Any radioactive material with a half-life not longer than 120 days in individual amounts not to exceed 0.56 GBq (15 mCi).

(4) Any radioactive material with a half-life longer than 120 days in individual amounts not to exceed the smaller of 7.4 MBq (200 µCi) or 1000 times the quantities in 902 KAR 100:030.

(5) Technetium-99m in amounts as needed.

Section 24. Requirements for Possession of Sealed Sources and Brachytherapy Sources. (1) A licensee in possession of any sealed source or brachytherapy source shall follow the radiation safety and handling instructions supplied by the manufacturer.

(2) A licensee in possession of a sealed source shall:

(a) Test the source for leakage before its first use unless the licensee has a certificate from the supplier indicating that the source was tested within six (6) months before transfer to the licensee; and

(b) Test the source for leakage at intervals not to exceed six (6) months or at other intervals approved by the cabinet, U.S. Nuclear Regulatory Commission, or equivalent agreement state in the Sealed Source and Device Registry.

(3) To satisfy the leak test requirements of this section, the licensee shall measure the sample so that the leak test can detect the presence of 185 Bq (0.005 µCi) of radioactive material in the sample.

(4) A licensee shall retain leak test records in accordance with subsection (8)(a) of this section.

(5) If the leak test reveals the presence of 185 Bq (0.005 µCi) or more of removable contamination, the licensee shall:

(a) Immediately withdraw the sealed source from use and store, dispose, or cause it to be repaired in accordance with the requirements in 902 KAR 100:019, 100:021, 100:040, and 100:058; and

(b) File a report within five (5) days of the leak test in accordance with 902 KAR 100:072, Section 18.

(6) A licensee need not perform a leak test on the following sources:

(a) Sources containing only radioactive material with a half-life of less than thirty (30) days;

(b) Sources containing only radioactive material as a gas;

(c) Sources containing 3.7 MBq (100 µCi) or less of beta or gamma-emitting material or 0.37 MBq (10 µCi) or less of alpha-emitting material;

(d) Seeds of iridium-192 encased in nylon ribbon; and

(e) Sources stored and not being used. However, the licensee shall test each source for leakage before any use or transfer unless it has been leak tested within six (6) months before the date of use or transfer.

(7) A licensee in possession of sealed sources or brachytherapy sources, except for gamma stereotactic radiosurgery sources, shall conduct a semiannual physical inventory of all these sources in its possession. The licensee shall retain each inventory record in accordance with subsection (8)(b) of this section.

(8) A licensee shall keep records of leaks tests and inventory of sealed sources and brachytherapy sources as follows:

(a) A licensee shall retain records of leak tests for three (3)

years. The records shall include the model number and serial number, if one (1) has been assigned, of each source tested; the identity of each source by radionuclide and its estimated activity; the results of the test; the date of the test; and the name of the individual who performed the test.

(b) A licensee shall retain records of the semiannual physical inventory of sealed sources and brachytherapy sources for three (3) years. The inventory records shall contain the model number of each source, and serial number if one (1) has been assigned, the identity of each source by radionuclide and its nominal activity, the location of each source, and the name of the individual who performed the inventory.

Section 25. Labeling of Vials and Syringes. Each syringe and vial that contains unsealed radioactive material shall be labeled to identify the radioactive drug. Each syringe shield and vial shield shall also be labeled unless the label on the syringe or vial is visible when shielded.

Section 26. Surveys of Ambient Radiation Exposure Rate. (1) In addition to the surveys required by 902 KAR 100:019, a licensee shall survey with a radiation detection survey instrument at the end of each day of use. A licensee shall survey all areas where unsealed radioactive material requiring a written directive was prepared for use or administered.

(2) A licensee ***shall not be[is not]*** required to perform the surveys required by subsection (1) of this section in an area where patients or human research subjects are confined when they cannot be released under Section 27 of this administrative regulation.

(3) A licensee shall retain a record of each survey for three (3) years. The record shall include the date of the survey, the results of the survey, the instrument used to conduct the survey, and the name of the individual who performed the survey.

Section 27. Release of Individuals Containing Unsealed Radioactive Material or Implants Containing Radioactive Material. (1) A licensee may authorize the release from its control of any individual who has been administered unsealed radioactive material or implants containing radioactive material if the total effective dose equivalent to any other individual from exposure to the released individual is not likely to exceed five (5) mSv (five-tenths[fife-tenths] (0.5) rem). NUREG-1556, Vol. 9, "Consolidated Guidance About Materials Licenses: Program-Specific Guidance About Medical Licenses," describes methods for calculating doses to other individuals and contains tables of activities not likely to cause doses exceeding five (5) mSv (0.5 rem).

(2) A licensee shall provide the released individual, or the individual's parent or guardian, with instructions, including written instructions, on actions recommended to maintain doses to other individuals as low as is reasonably achievable if the total effective dose equivalent to any other individual is likely to exceed one (1) mSv (one-tenth (0.1) rem). If the total effective dose equivalent to a nursing infant or child could exceed one (1) mSv (one-tenth (0.1) rem) assuming there were no interruption of breast-feeding, the instructions shall also include:

(a)[1.] Guidance on the interruption or discontinuation of breast-feeding; and

(b)[2.] Information on the potential consequences, if any, of failure to follow the guidance.

(3) A licensee shall retain a record of the basis for authorizing the release of an individual in accordance with this section, if the total effective dose equivalent is calculated by:

(a) Using the retained activity rather than the activity administered;

(b) Using an occupancy factor less than 0.25 at one (1) meter;

(c) Using the biological or effective half-life; or

(d) Considering the shielding by tissue.

(4) A licensee shall retain a record that the instructions, required by this section, were provided to a breast-feeding female if the radiation dose to the infant or child from continued breast-feeding could result in a total effective dose equivalent exceeding five (5) mSv (five-tenths (0.5) rem).

(5) The records required by subsections (3), and (4) of this section shall be retained for three (3) years after the date of release of the individual.

(6) A report shall be filed in accordance with Section 15 of this chapter and submitted to the cabinet if a dose greater than 50 mSv (5 rem) is received by an individual from a patient released under this section.

Section 28. Provision of Mobile Medical Service. (1) A licensee providing mobile medical service shall:

(a) Obtain a letter signed by the management of each client for which services are rendered that permits the use of byproduct material at the client's address and clearly delineates the authority and responsibility of the licensee and the client;

(b) Check instruments used to measure the activity of unsealed radioactive material for proper function before medical use at each client's address or on each day of use, whichever is more frequent. At a minimum, the check for proper function required by this paragraph shall include a constancy check;

(c) Check survey instruments for proper operation with a dedicated check source before use at each client's address; and

(d) Before leaving a client's address, survey all areas of use to ensure compliance with the requirements in 902 KAR 100:019.

(2) A mobile medical service shall not have radioactive material delivered from the manufacturer or the distributor to the client unless the client has a license allowing possession of the byproduct material. Radioactive material delivered to the client shall be received and handled in conformance with the client's license.

(3) A licensee providing mobile medical services shall retain the letter required in subsection (1)(a) and the record of each survey required in subsection (1)(d) of this section respectively:

(a) A licensee shall retain a copy of each letter required in subsection (1)(a) that permits the use of radioactive material at a client's address. Each letter shall clearly delineate the authority and responsibility of the licensee and the client and shall be retained for three (3) years after the last provision of service.

(b) A licensee shall retain the record of each survey required by subsection (1)(d) for three (3) years. The record shall include the date of the survey, the results of the survey, the instrument used to make the survey, and the name of the individual who performed the survey.

(4) The cabinet shall license mobile medicine services in accordance with this administrative regulation and applicable requirements of 902 KAR 100:012, 100:015, 100:019, 100:021, 100:040, 100:050, 100:060, 100:070, and 100:165.

Section 29. Decay-in-storage. (1) A licensee may hold radioactive material with a physical half-life of less than 120 days for decay-in-storage before disposal without regard to its radioactivity if the licensee***:[,]***

(a) Holds radioactive material for decay a minimum of ten (10) half-lives;

(b) Monitors radioactive material at the surface before disposal and determines that its radioactivity cannot be distinguished from the background radiation level with an appropriate radiation detection survey meter set on its most sensitive scale and with no interposed shielding; and

(c) Removes or obliterates all radiation labels, except for radiation labels on materials that are within containers and that will be managed as biomedical waste after they have been released from the licensee.

(2) A licensee shall retain a record of each disposal for three (3) years. The record shall include the:

(a) Date of the disposal;

(b) Date on which the radioactive material was placed in storage;

(c) Radionuclides disposed;

(d) Model and serial number of the survey instrument used;

(e) Background dose rate;

(f) Radiation dose rate measured at the surface of each waste container; and

(g) Name of the individual who performed the disposal.

Section 30. Use of Unsealed Radioactive Material for Uptake, Dilution, and Excretion Studies for Which a Written Directive is Not Required. Except for quantities that require a written directive under Section 13(2), of this administrative regulation a licensee may use any unsealed radioactive material prepared for medical use for uptake, dilution, or excretion studies that is:

(1) Obtained from a manufacturer or preparer licensed under 902 KAR 100:040 and 902 KAR 100:058 of this chapter, U.S. Nuclear Regulatory Commission, or equivalent agreement state requirements;

(2) Prepared by:

(a) An authorized nuclear pharmacist;

(b) A physician who is an authorized user and who meets the requirements specified in Section 69 or 70 and Section 69(3)(a)2.g of this administrative regulation; or

(c) An individual under the supervision of either as specified in Section 12 of this administrative regulation; or

(3) Obtained from and prepared by a licensee of the cabinet, U.S. Nuclear Regulatory Commission, or equivalent agreement state for use in research in accordance with a Radioactive Drug Research Committee-approved protocol or an Investigational New Drug (IND) protocol accepted by FDA; or

(4) Prepared by the licensee for use in research in accordance with a Radioactive Drug Research Committee-approved application or an Investigational New Drug (IND) protocol accepted by FDA.

Section 31. Use of Unsealed Radioactive Material for Imaging and Localization Studies for Which a Written Directive is Not Required. Except for quantities that require a written directive under Section 13(2) of this administrative regulation a licensee may use any unsealed radioactive material prepared for medical use for imaging and localization studies that is:

(1) Obtained from a manufacturer or preparer licensed under 902 KAR 100:040 or 100:058 of this chapter, U.S. Nuclear Regulatory Commission, or equivalent agreement state requirements;

(2) Prepared by:

(a)[~~1.~~] An authorized nuclear pharmacist;

(b)[~~2.~~] A physician who is an authorized user and who meets the requirements specified in Sections 69 or 70 and Section 69(3)(a)2.g. of this administrative regulation; or

(c)[~~3.~~] An individual under the supervision, as specified in Section 12 of this administrative regulation;

(3) Obtained from and prepared by a cabinet, U.S. Nuclear Regulatory Commission, or equivalent agreement state licensee for use in research in accordance with a Radioactive Drug Research Committee-approved protocol or an Investigational New Drug (IND) protocol accepted by FDA; or

(4) Prepared by the licensee for use in research in accordance with a Radioactive Drug Research Committee-approved application or an Investigational New Drug (IND) protocol accepted by FDA.

Section 32. Permissible Radionuclide Contaminant Concentration. (1) A licensee shall not administer to humans a radiopharmaceutical containing more than:

(a) 0.15 kilobecquerel of molybdenum-99 per megabecquerel of technetium-99m (0.15 microcurie of molybdenum-99 per millicurie of technetium-99m); or

(b) 0.02 kilobecquerel of strontium-82 per megabecquerel of rubidium-82 chloride injection (0.02 microcurie of strontium-82 per millicurie of rubidium-82 chloride); or

(c) 0.02 kilobecquerel of strontium-85 per megabecquerel of rubidium-82 chloride injection (0.2 microcurie of strontium-85 per millicurie of rubidium-82 chloride);

(2) A licensee preparing radiopharmaceuticals from radionuclide generators shall measure the concentration of radionuclide contaminant of the first eluate after receipt of a generator to demonstrate compliance with limits specified in subsection (1) of this section.

(3) A licensee required to measure radionuclide contaminant concentration, in this section, shall retain a record of each measurement for three (3) years;

(a) The record shall include, for each elution or extraction tested, the:

1. Measured activity of the radiopharmaceutical expressed in millicuries;

2. Measured activity of contaminant expressed in microcuries;

3. Ratio of the measurements in subsection (1)(a), (b), and (c) of this section expressed as microcuries of contaminant per millicurie of radiopharmaceutical;

4. Date of the test; and

5. Initials of the individual who performed the test.

(b) A licensee shall report immediately to the cabinet each occurrence of contaminant concentration exceeding the limits specified in this section.

Section 33. Use of Unsealed Radioactive Material for Which a Written Directive is Required. A licensee may use any unsealed radioactive material prepared for medical use and for which a written directive is required that is:

(1) Obtained from a manufacturer or preparer licensed under 902 KAR 100:040 or 902 KAR 100:058 of this chapter, U.S. Nuclear Regulatory Commission, or equivalent agreement state requirements;

(2) Prepared by an authorized nuclear pharmacist; a physician who is an authorized user and who meets the requirements specified in Section 69 or 70 of this administrative regulation, or an individual under the supervision, as specified in Section 12 of this administrative regulation;

(3) Obtained from and prepared by a cabinet, U.S. Nuclear Regulatory Commission, or equivalent agreement state licensee for use in research in accordance with an Investigational New Drug (IND) protocol accepted by FDA; or

(4) Prepared by the licensee for use in research in accordance with an Investigational New Drug (IND) protocol accepted by FDA.

Section 34. Safety Instruction. (1) In addition to 902 KAR 100:165, a licensee shall provide radiation safety instruction, initially and at least annually, to personnel caring for the patient or the human research subjects receiving radiopharmaceutical therapy and hospitalized for compliance with Section 27 of this administrative regulation. To satisfy this requirement, the instruction shall describe the licensee's procedures for:

(a) Patient or human research subject control;

(b) Visitor control:

1. Routine visitation to hospitalized individuals in accordance with 902 KAR 100:019, Section 10(1)(a) of this chapter; and

2. Visitation authorized in accordance with 902 KAR 100:019, Section 10(6) of this chapter;

(c) Contamination control;

(d) Waste control; and

(e) Notification of the radiation safety officer, or his or her designee, and the authorized user if the patient or the human research subject has a medical emergency or dies.

(2) A licensee shall retain a record of individuals receiving safety instructions for three (3) years. The record shall include a list of the topics covered, the date of the instruction, the name of the attendee(s), and the name(s) of the individual(s) who provided the instruction.

Section 35. Safety Precautions. (1) For each patient or human research subject who cannot be released under Section 27 of this administrative regulation a licensee shall:

(a) Quarter the patient or the human research subject either in:

1. A private room with a private sanitary facility; or

2. A room, with a private sanitary facility, with another individual who also has received therapy with unsealed radioactive material and who also cannot be released under Section 27 of this administrative regulation;

(b) Visibly post the patient's or the human research subject's room with a "Radioactive Materials" sign:

(c) Note on the door or in the patient's or human research subject's chart where and how long visitors may stay in the patient's or the human research subject's room; and

(d) Either monitor material and items removed from the patient's or the human research subject's room to determine that their radioactivity cannot be distinguished from the natural background radiation level with a radiation detection survey instrument set on its most sensitive scale and with no interposed shielding, or handle the material and items as radioactive waste.

(2) A licensee shall notify the radiation safety officer, or his or her designee, and the authorized user as soon as possible if the patient or human research subject has a medical emergency or dies.

Section 36. Suppliers for Sealed Sources or Devices for Medical Use. For medical use, a licensee shall only use:

(1) Sealed sources or devices manufactured, labeled, packaged, and distributed in accordance with a license issued by the cabinet, U.S. Nuclear Regulatory Commission, or equivalent agreement state;

(2) Sealed sources or devices noncommercially transferred from a 902 KAR 100:072 license, U.S. Nuclear Regulatory Commission, or equivalent State Medical License; or

(3) Teletherapy sources manufactured and distributed in accordance with a license issued by the cabinet, U.S. Nuclear Regulatory Commission, or equivalent agreement state.

Section 37. Use of Sources for Manual Brachytherapy. A licensee shall use only brachytherapy sources for therapeutic medical uses:

(1) As approved in the Sealed Source and Device Registry; or

(2) In research in accordance with an active Investigational Device Exemption (IDE) application accepted by the FDA if the requirements of Section 36(1) of this administrative regulation are met.

Section 38. Surveys After Source Implant and Removal. (1) Immediately after implanting sources in a patient or a human research subject, the licensee shall make a survey to locate and account for all sources that have not been implanted.

(2) Immediately after removing the last temporary implant source from a patient or a human research subject, the licensee shall make a survey of the patient or the human research subject with a radiation detection survey instrument to confirm that all sources have been removed.

(3) A licensee shall retain a record of the surveys required by subsections (1) and (2) of this section for three (3) years. Each record shall include the date and results of the survey, the survey instrument used, and the name of the individual who made the survey.

Section 39. Brachytherapy Sources Accountability. (1) A licensee shall maintain accountability at all times for all brachytherapy sources in storage or use.

(2) As soon as possible after removing sources from a patient or a human research subject, a licensee shall return brachytherapy sources to a secure storage area.

(3) A licensee shall maintain a record of the brachytherapy source accountability for three (3) years for:

(a) Temporary implants, the record shall include:

1. The number and activity of sources removed from storage, the time and date they were removed from storage, the name of the individual who removed them from storage, and the location of use; and

2. The number and activity of sources returned to storage, the time and date they were returned to storage, and the name of the individual who returned them to storage.

(b) Permanent implants, the record shall include:

1. The number and activity of sources removed from storage, the date they were removed from storage, and the name of the individual who removed them from storage;

2. The number and activity of sources not implanted, the date they were returned to storage, and the name of the individual who returned them to storage; and

3. The number and activity of sources permanently implanted in the patient or human research subject.

Section 40. Safety Instruction. In addition to the requirements of 902 KAR 100:165 of this chapter. (1) The licensee shall provide radiation safety instruction, initially and at least annually, to personnel caring for patients or human research subjects who are receiving brachytherapy and cannot be released under Section 27 of this administrative regulation. To satisfy this requirement, the instruction shall be commensurate with the duties of the personnel and shall include the:

(a) Size and appearance of the brachytherapy sources;

(b) Safe handling and shielding instructions;

(c) Patient or human research subject control;

(d) Visitor control, including both:

1. Routine visitation of hospitalized individuals in accordance with 902 KAR 100:019, Section 10(1)(a) of this chapter; and

2. Visitation authorized in accordance with 902 KAR 100:019, Section 10(6) of this chapter; and

(e) Notification of the radiation safety officer, or his or her designee, and an authorized user if the patient or the human research subject has a medical emergency or dies.

(2) A licensee shall retain a record of individuals receiving instruction for three (3) years. The record shall include a list of the topics covered, the date of the instruction, the name of the attendee, and the name of the individual who provided the instruction.

Section 41. Safety Precautions. (1) For each patient or human research subject who is receiving brachytherapy and cannot be released under Section 27 of this administrative regulation a licensee shall:

(a) Not quarter the patient or the human research subject in the same room as an individual who is not receiving brachytherapy;

(b) Visibly post the patient's or human research subject's room with a "Radioactive Materials" sign; and

(c) Note on the door or in the patient's or human research subject's chart where and how long visitors may stay in the patient's or human research subject's room.

(2) A licensee shall have applicable emergency response equipment available near each treatment room to respond to a source:

(a) Dislodged from the patient; and

(b) Lodged within the patient following removal of the source applicators.

(3) A licensee shall notify the radiation safety officer, or his or her designee, and an authorized user as soon as possible if the patient or human research subject has a medical emergency or dies.

Section 42. Calibration Measurements of Brachytherapy Sources. (1) Before the first medical use of a brachytherapy source on or after October 24, 2005, a licensee shall have:

(a) Determined the source output or activity using a dosimetry system that meets the requirements of Section 51(1) of this administrative regulation;

(b) Determined source positioning accuracy within applicators; and

(c) Used published protocols currently accepted by nationally recognized bodies to meet the requirements of subsection (1)(a) and (b) of this section.

(2) A licensee may use measurements provided by the source manufacturer or by a calibration laboratory accredited by the American Association of Physicists in Medicine that are made in accordance with subsection (1) of this section.

(3) A licensee shall mathematically correct the outputs or activities determined in subsection (1) of this section for physical decay at intervals consistent with one (1) percent physical decay.

(4) A licensee shall retain a record of each calibration of brachytherapy sources required by this section for three (3) years after the last use of the source. The record shall include:

(a) The date of the calibration;

(b) The manufacturer's name, model number, and serial number for the source and the instruments used to calibrate the source;

(c) The source output or activity;

(d) The source positioning accuracy within the applicators; and

(e) The name of the individual, source manufacturer, or the calibration laboratory that performed the calibration.

Section 43. Decay of strontium-90 sources for ophthalmic treatments. (1) Only an authorized medical physicist shall calculate the activity of each strontium-90 source that is used to determine the treatment times for ophthalmic treatments. The decay shall be based on the activity determined under Section 42 of this administrative regulation.

(2) A licensee shall retain a record of the activity of each strontium-90 source for the life of the source. The record shall include:

(a) The date and initial activity of the source as determined under Section 42 of this administrative regulation; and

(b) For each decay calculation, the date and the source activity as determined under subsection (1) of this section.

Section 44. Therapy-related computer systems. The licensee shall perform acceptance testing on the treatment planning system of therapy-related computer systems in accordance with published protocols accepted by nationally-recognized bodies. At a minimum, the acceptance testing shall include, as applicable, verification of:

(1) The source-specific input parameters required by the dose calculation algorithm;

(2) The accuracy of dose, dwell time, and treatment time calculations at representative points;

(3) The accuracy of isodose plots and graphic displays; and

(4) The accuracy of the software used to determine sealed source positions from radiographic images.

Section 45. Use of Sealed Sources for Diagnosis. A licensee shall use only sealed sources for diagnostic medical uses as approved in the Sealed Source and Device Registry.

Section 46. Use of a Sealed Source in a Remote Afterloader Unit, Teletherapy Unit, or Gamma Stereotactic Radiosurgery Unit. A licensee shall use sealed sources in photon emitting remote afterloader units, teletherapy units, or gamma stereotactic radiosurgery units for therapeutic medical uses:

(1) As approved in the Sealed Source and Device Registry; or

(2) In research in accordance with an active Investigational Device Exemption (IDE) application accepted by the FDA provided the requirements of Section 36(1) of this administrative regulation are met.

Section 47. Surveys of Patients and Human Research Subjects Treated with a Remote Afterloader Unit. (1) Before releasing a patient or a human research subject from licensee control, a licensee shall survey the patient or the human research subject and the remote afterloader unit with a portable radiation detection survey instrument to confirm that the source has been removed from the patient or human research subject and returned to the safe shielded position.

(2) A licensee shall retain a record of the surveys for three (3) years. Each record shall include the date and results of the survey, the survey instrument used, and the name of the individual who made the survey.

Section 48. Installation, Maintenance, Adjustment, and Repair. (1) Only a person specifically licensed by the cabinet, U.S. Nuclear Regulatory Commission, or equivalent agreement state shall install, maintain, adjust, or repair a remote afterloader unit, teletherapy unit, or gamma stereotactic radiosurgery unit that involves work on the source shielding, the source driving unit, or other electronic or mechanical component that could expose the source, reduce the shielding around the source, or compromise the radiation safety of the unit or the source.

(2) Except for low dose-rate remote afterloader units, only a person specifically licensed by the cabinet, U.S. Nuclear Regulatory Commission, or equivalent agreement state shall install, replace, relocate, or remove a sealed source or source contained in other remote afterloader units, teletherapy units, or gamma stereotactic radiosurgery units.

(3) For a low dose-rate remote afterloader unit, only a person specifically licensed by the cabinet, U.S. Nuclear Regulatory Commission, or equivalent agreement state or an authorized medical physicist shall install, replace, relocate, or remove a sealed source contained in the unit.

(4) A licensee shall retain a record of the installation, maintenance, adjustment, and repair of remote afterloader units, teletherapy units, and gamma stereotactic radiosurgery units for three (3) years. For each installation, maintenance, adjustment and repair, the record shall include the date, description of the service, and name of the individual who performed the work.

Section 49. Safety Procedures and instructions for Remote Afterloader Units, Teletherapy Units, and Gamma Stereotactic Radiosurgery Units. (1) A licensee shall:

(a) Secure the unit, the console, the console keys, and the treatment room when not in use or unattended;

(b) Permit only individuals approved by the authorized user, radiation safety officer, or authorized medical physicist to be present in the treatment room during treatment with the source;

(c) Prevent dual operation of more than one (1) radiation producing device in a treatment room if applicable; and

(d) Develop, implement, and maintain written procedures for responding to an abnormal situation if the operator is unable to place the source in the shielded position, or remove the patient or human research subject from the radiation field with controls from outside the treatment room. These procedures shall include:

1. Instructions for responding to equipment failures and the names of the individuals responsible for implementing corrective actions;

2. The process for restricting access to and posting of the treatment area to minimize the risk of inadvertent exposure; and

3. The names and telephone numbers of the authorized users, the authorized medical physicist, and the radiation safety officer to be contacted if the unit or console operates abnormally.

(2) A copy of the procedures required by subsection (1)(d) of this section shall be physically located at the unit console.

(3) A licensee shall post instructions at the unit console to inform the operator of:

(a) The location of the procedures required by subsection (1)(d) of this section; and

(b) The names and telephone numbers of the authorized users, the authorized medical physicist, and the radiation safety officer to be contacted if the unit or console operates abnormally.

(4) A licensee shall provide instruction, initially and at least annually, to all individuals who operate the unit, as appropriate to the individual's assigned duties, in:

(a) The procedures identified in paragraph (1)(d) of this section; and

(b) The operating procedures for the unit.

(5) A licensee shall ensure that operators, authorized medical physicists, and authorized users participate in drills of the emergency procedures, initially and at least annually.

(6) A licensee shall retain a record of individuals receiving instructions for three (3) years. The record shall include a list of the topics covered, the date of the instruction, the name of the attendee, and the name of the individual who provided the instruction.

(7) A licensee shall retain a copy of the procedures until the licensee no longer possesses the remote afterloader, teletherapy unit, or gamma stereotactic radiosurgery unit.

Section 50. Safety Precautions for Remote Afterloader Units, Teletherapy Units, and Gamma Stereotactic Radiosurgery Units. (1) A licensee shall control access to the treatment room by a door at each entrance.

(2) A licensee shall equip each entrance to the treatment room with an electrical interlock system that shall:

(a) Prevent the operator from initiating the treatment cycle unless each treatment room entrance door is closed;

(b) Cause the source to be shielded when an entrance door is

opened; and

(c) Prevent the source from being exposed following an interlock interruption until all treatment room entrance doors are closed and the source on-off control is reset at the console.

(3) A licensee shall require any individual entering the treatment room to assure, through the use of appropriate radiation monitors, that radiation levels have returned to ambient levels.

(a) Each radiation monitor shall be equipped with a backup power supply separate from the power supply to the unit. This backup power supply may be a battery system.

(b) If the radiation monitor is inoperable, the licensee shall require any individual entering the treatment room to use a survey instrument or audible alarm personal dosimeter to monitor for any malfunction of the source exposure mechanism that may result in an exposed or partially exposed source. The instrument or dosimeter shall be checked with a dedicated check source for proper operation at the beginning of each day of use. The licensee shall keep a record as ***established[~~described~~]*** in this section.

(c) A licensee shall promptly repair or replace the radiation monitor if it is inoperable.

(4) Except for low-dose remote afterloader units, a licensee shall construct or equip each treatment room with viewing and intercom systems to permit continuous observation of the patient or the human research subject from the treatment console during irradiation.

(5) For licensed activities in which a source is placed within the patient's or human research subject's body, a licensee shall only conduct treatments that allow for expeditious removal of a decoupled or jammed source.

(6) In addition to the requirements specified in subsections (1) through (5) of this section, a licensee shall:

(a) For medium dose-rate and pulsed dose-rate remote afterloader units, require:

1. An authorized medical physicist and either an authorized user or a physician, under the supervision of an authorized user, who has been trained in the operation and emergency response for the unit to be physically present during the initiation of all patient treatments involving the unit; and

2. An authorized medical physicist and either an authorized user or an individual, under the supervision of an authorized user, who has been trained to remove the source applicator ***if there is[~~in the event of~~]*** an emergency involving the unit, to be immediately available during continuation of all patient treatments involving the unit.

(b) For high dose-rate remote afterloader units, require:

1. An authorized user and an authorized medical physicist to be physically present during the initiation of all patient treatments involving the unit; and

2. An authorized medical physicist and either an authorized user or a physician, under the supervision of an authorized user, who has been trained in the operation and emergency response for the unit, to be physically present during continuation of all patient treatments involving the unit.

(c) For gamma stereotactic radiosurgery units, require an authorized user and an authorized medical physicist to be physically present throughout all patient treatments involving the unit.

(d) Notify the radiation safety officer, or his or her designee, and an authorized user as soon as possible if the patient or human research subject has a medical emergency or dies.

(7) A licensee shall have applicable emergency response equipment available near each treatment room to respond to a source:

(a) Remaining in the unshielded position; or

(b) Lodged within the patient following completion of the treatment.

Section 51. Dosimetry Equipment. (1) Except for low dose-rate remote afterloader sources in which the source output or activity is determined by the manufacturer, a licensee shall have a calibrated dosimetry system available for use. To satisfy this requirement, one (1) of the following two (2) conditions shall be met:

(a) The system shall have been calibrated using a system or source traceable to the National Institute of Science and Technology (NIST) and published protocols accepted by nationally recognized bodies or by a calibration laboratory accredited by the American Association of Physicists in Medicine (AAPM). The calibration shall have been performed within the previous two (2) years and after any servicing that may have affected system calibration; or

(b) The system shall have been calibrated within the previous four (4) years. Eighteen (18) to thirty (30) months after that calibration, the system shall have been intercompared with another dosimetry system that was calibrated within the past twenty-four (24) months by NIST or by a calibration laboratory accredited by the AAPM. The results of the intercomparison shall indicate that the calibration factor of the licensee's system had not changed by more than two (2) percent. The licensee shall not use the intercomparison result to change the calibration factor. If intercomparing dosimetry systems to be used for calibrating sealed sources for therapeutic units, the licensee shall use a comparable unit with beam attenuators or collimators, as applicable, and sources of the same radionuclide as the source used at the licensee's facility.

(2) The licensee shall have a dosimetry system available for use for spot-check output measurements, if applicable. To satisfy this requirement, the system may be compared with a system that has been calibrated in accordance with subsection (1) of this section. This comparison shall have been performed within the previous year and after each servicing that may have affected system calibration. The spot-check system may be the same system used to meet the requirement in subsection (1) of this section.

(3) The licensee shall retain a record of each calibration, intercomparison, and comparison in accordance with this section for the duration of the license. For each calibration, intercomparison, or comparison, the record shall include:

(a) The date;

(b) The manufacturer's name, model numbers and serial numbers of the instruments that were calibrated, intercompared, or compared as required by subsections (1) and (2) of this section;

(c) The correction factor that was determined from the calibration or comparison or the apparent correction factor that was determined from an intercomparison; and

(d) The names of the individuals who performed the calibration, intercomparison, or comparison.

Section 52. Full Calibration Measurements on Teletherapy Units. (1) A licensee authorized to use a teletherapy unit for medical use shall perform full calibration measurements on each teletherapy unit:

(a) Before the first medical use of the unit;

(b) Before medical use under the following conditions:

1. If spot-check measurements indicate that the output differs by more than five (5) percent from the output obtained at the last full calibration corrected mathematically for radioactive decay;

2. Following replacement of the source or following reinstallation of the teletherapy unit in a new location; or

3. Following any repair of the teletherapy unit that includes removal of the source or major repair of the components associated with the source exposure assembly; and

(c) At intervals not exceeding one (1) year.

(2) To satisfy the requirement of subsection (1) of this section, full calibration measurements shall include determination of:

(a) The output within +/- three (3) percent for the range of field sizes and for the distance or range of distances used for medical use;

(b) The coincidence of the radiation field and the field indicated by the light beam localizing device;

(c) The uniformity of the radiation field and its dependence on the orientation of the useful beam;

(d) Timer accuracy and linearity over the range of use;

(e) On-off error; and

(f) The accuracy of all distance measuring and localization devices in medical use.

(3) A licensee shall use the dosimetry system described in

Section 51(1) of this administrative regulation to measure the output for one (1) set of exposure conditions. The remaining radiation measurements required in subsection (2)(a) of this section may be made using a dosimetry system that indicates relative dose rates.

(4) A licensee shall make full calibration measurements required by subsection (1) of this section in accordance with published protocols accepted by nationally-recognized bodies.

(5) A licensee shall mathematically correct the outputs determined in subsection (2)(a) of this section for physical decay for intervals not exceeding one (1) month for cobalt-60, six (6) months for cesium-137, or at intervals consistent with one (1) percent decay for all other nuclides.

(6) Full calibration measurements required by subsection (1) of this section and physical decay corrections required by subsection (5) of this section shall be performed by the authorized medical physicist.

(7) A licensee shall retain a record of each calibration for three (3) years. The record shall include:

(a) The date of the calibration;

(b) The manufacturer's name, model number, and serial number of the teletherapy, remote afterloader, and gamma stereotactic radiosurgery unit, the source, and the instruments used to calibrate the unit;

(c) The results and an assessment of the full calibrations;

(d) The results of the autoradiograph required for low dose-rate remote afterloader units; and

(e) The signature of the authorized medical physicist who performed the full calibration.

Section 53. Full calibration measurements on remote afterloader units. (1) A licensee authorized to use a remote afterloader unit for medical use shall perform full calibration measurements on each unit:

(a) Before the first medical use of the unit;

(b) Before medical use under the following conditions:

1. Following replacement of the source or following reinstallation of the unit in a new location outside the facility; and

2. Following any repair of the unit that includes removal of the source or major repair of the components associated with the source exposure assembly;

(c) At intervals not exceeding one (1) quarter for high dose-rate, medium dose-rate, and pulsed dose-rate remote afterloader units with sources whose half-life exceeds seventy-five (75) days; and

(d) At intervals not exceeding one (1) year for low dose-rate remote afterloader units.

(2) To satisfy the requirement of subsection (1) of this section, full calibration measurements shall include, as applicable, determination of:

(a) The output within ± five (5) percent;

(b) Source positioning accuracy to within ± one (1) millimeter;

(c) Source retraction with backup battery upon power failure;

(d) Length of the source transfer tubes;

(e) Timer accuracy and linearity over the typical range of use;

(f) Length of the applicators; and

(g) Function of the source transfer tubes, applicators, and transfer tube-applicator interfaces.

(3) A licensee shall use the dosimetry system described in Section 51(1) of this administrative regulation to measure the output.

(4) A licensee shall make full calibration measurements required by subsection (1) of this section in accordance with published protocols accepted by nationally-recognized bodies.

(5) In addition to the requirements for full calibrations for low dose-rate remote afterloader units in subsection (2) of this section, a licensee shall perform an autoradiograph of the source to verify inventory and source arrangement at intervals not exceeding one (1) quarter.

(6) For low dose-rate remote afterloader units, a licensee may use measurements provided by the source manufacturer that are made in accordance with subsections (1) through (5) of this section.

(7) A licensee shall mathematically correct the outputs determined in subsection (2)(a) of this section for physical decay at intervals consistent with one (1) percent physical decay.

(8) Full calibration measurements required by subsection (1) of this section and physical decay corrections required by subsection (7) of this section shall be performed by the authorized medical physicist.

(9) A licensee shall retain a record of each calibration for three (3) years. The record shall include:

(a) The date of the calibration;

(b) The manufacturer's name, model number, and serial number of the teletherapy, remote afterloader, and gamma stereotactic radiosurgery unit, the source, and the instruments used to calibrate the unit;

(c) The results and an assessment of the full calibrations;

(d) The results of the autoradiograph required for low dose-rate remote afterloader units; and

(e) The signature of the authorized medical physicist who performed the full calibration.

Section 54. Full calibration measurements on gamma stereotactic radiosurgery units (1) A licensee authorized to use a gamma stereotactic radiosurgery unit for medical use shall perform full calibration measurements on each unit:

(a) Before the first medical use of the unit;

(b) Before medical use under the following conditions:

1. Whenever spot-check measurements indicate that the output differs by more than five (5) percent from the output obtained at the last full calibration corrected.

2. Following replacement of the sources or following reinstallation of the gamma mathematically for radioactive decay, stereotactic radiosurgery unit in a new location, and

3. Following any repair of the gamma stereotactic radiosurgery unit that includes removal of the sources or major repair of the components associated with the source assembly; and

(c) At intervals not exceeding one (1) year, with the exception that relative helmet factors need only be determined before the first medical use of a helmet and following any damage to a helmet.

(2) To satisfy the requirement of subsection (1) of this section, full calibration measurements shall include determination of:

(a) The output within ± three (3) percent;

(b) Relative helmet factors;

(c) Isocenter coincidence;

(d) Timer accuracy and linearity over the range of use;

(e) On-off error;

(f) Trunnion centricity;

(g) Treatment table retraction mechanism, using backup battery power or hydraulic backups with the unit off;

(h) Helmet microswitches;

(i) Emergency timing circuits; and

(j) Stereotactic frames and localizing devices (trunnions).

(3) A licensee shall use the dosimetry system described in Section 51(1) of this administrative regulation to measure the output for one (1) set of exposure conditions. The remaining radiation measurements required in subsection (2)(a) of this section may be made using a dosimetry system that indicates relative dose rates.

(4) A licensee shall make full calibration measurements required by subsection (1) of this section in accordance with published protocols accepted by nationally recognized bodies.

(5) A licensee shall mathematically correct the outputs determined in subsection (2)(a) of this section at intervals not exceeding one (1) month for cobalt-60 and at intervals consistent with one (1) percent physical decay for all other radionuclides.

(6) Full calibration measurements required by subsection (1) of this section and physical decay corrections required by subsection (5) of this section shall be performed by the authorized medical physicist.

(7) A licensee shall retain a record of each calibration for three (3) years. The record shall include:

(a) The date of the calibration;

(b) The manufacturer's name, model number, and serial number of the teletherapy, remote afterloader, and gamma

stereotactic radiosurgery unit, the source, and the instruments used to calibrate the unit;

(c) The results and an assessment of the full calibrations;

(d) The results of the autoradiograph required for low dose-rate remote afterloader units; and

(e) The signature of the authorized medical physicist who performed the full calibration.

Section 55. Periodic Spot-checks for Teletherapy Units. (1) A licensee authorized to use teletherapy units for medical use shall perform output spot-checks on each teletherapy unit once in each calendar month that shall include determination of:

(a) Timer accuracy, and timer linearity over the range of use;

(b) On-off error;

(c) The coincidence of the radiation field and the field indicated by the light beam localizing device;

(d) The accuracy of all distance measuring and localization devices used for medical use;

(e) The output for one (1) typical set of operating conditions measured with the dosimetry system described in Section 51(2) of this administrative regulation; and

(f) The difference between the measurement made in subsection (1)(e) of this section and the anticipated output, expressed as a percentage of the anticipated output (i.e., the value obtained at last full calibration corrected mathematically for physical decay).

(2) A licensee shall perform measurements required by subsection (1) of this section in accordance with written procedures established by the authorized medical physicist. That individual shall not be required to actually perform the spot-check measurements.

(3) A licensee shall have the authorized medical physicist review the results of each spot-check within fifteen (15) days. The authorized medical physicist shall notify the licensee as soon as possible in writing of the results of each spot-check.

(4) A licensee authorized to use a teletherapy unit for medical use shall perform safety spot-checks of each teletherapy facility once in each calendar month and after each source installation to assure proper operation of:

(a) Electrical interlocks at each teletherapy room entrance;

(b) Electrical or mechanical stops installed for the purpose of limiting use of the primary beam of radiation (restriction of source housing angulation or elevation, carriage or stand travel and operation of the beam on-off mechanism);

(c) Source exposure indicator lights on the teletherapy unit, on the control console, and in the facility;

(d) Viewing and intercom systems;

(e) Treatment room doors from inside and outside the treatment room; and

(f) Electrically assisted treatment room doors with the teletherapy unit electrical power turned off.

(5) If the results of the checks required in subsection (4) of this section indicate the malfunction of any system, a licensee shall lock the control console in the off position and shall not use the unit except as may be necessary to repair, replace, or check the malfunctioning system.

(6) A licensee shall retain a record of each spot-check for teletherapy units for three (3) years. The record shall include:

(a) The date of the spot-check;

(b) The manufacturer's name, model number, and serial number of the teletherapy unit, source and instrument used to measure the output of the teletherapy unit;

(c) An assessment of timer linearity and constancy;

(d) The calculated on-off error;

(e) A determination of the coincidence of the radiation field and the field indicated by the light beam localizing device;

(f) The determined accuracy of each distance measuring and localization device;

(g) The difference between the anticipated output and the measured output;

(h) Notations indicating the operability of each entrance door electrical interlock, each electrical or mechanical stop, each source exposure indicator light, and the viewing and intercom system and doors; and

(i) The name of the individual who performed the periodic spot-check and the signature of the authorized medical physicist who reviewed the record of the spot-check.

(7) A licensee shall retain a copy of the procedures required by subsection (2) of this section until the licensee no longer possesses the teletherapy unit.

Section 56. Periodic Spot-checks for Remote Afterloader Units. (1) A licensee authorized to use a remote afterloader unit for medical use shall perform spot-checks of each remote afterloader facility and on each unit:

(a) Before the first use of a high dose-rate, medium dose-rate, or pulsed dose-rate remote afterloader unit on a given day;

(b) Before each patient treatment with a low dose-rate remote afterloader unit; and

(c) After each source installation.

(2) A licensee shall perform the measurements required by subsection (1) of this section in accordance with written procedures established by the authorized medical physicist. That individual shall not be required to actually perform the spot check measurements.

(3) A licensee shall have the authorized medical physicist review the results of each spot-check within fifteen (15) days. The authorized medical physicist shall notify the licensee as soon as possible in writing of the results of each spot-check.

(4) To satisfy the requirements of subsection (1) of this section, spot-checks shall, at a minimum, assure proper operation of:

(a) Electrical interlocks at each remote afterloader unit room entrance;

(b) Source exposure indicator lights on the remote afterloader unit, on the control console, and in the facility;

(c) Viewing and intercom systems in each high dose-rate, medium dose-rate, and pulsed dose-rate remote afterloader facility;

(d) Emergency response equipment;

(e) Radiation monitors used to indicate the source position;

(f) Timer accuracy;

(g) Clock (date and time) in the unit's computer; and

(h) Decayed source activity in the unit's computer.

(5) If the results of the checks required in subsection (4) of this section indicate the malfunction of any system, a licensee shall lock the control console in the off position and shall not use the unit except as may be necessary to repair, replace, or check the malfunctioning system.

(6) A licensee shall retain a record of each spot-check for remote afterloader units for three (3) years. The record shall include, as applicable:

(a) The date of the spot-check;

(b) The manufacturer's name, model number, and serial number for the remote afterloader unit and source;

(c) An assessment of timer accuracy;

(d) Notations indicating the operability of each entrance door electrical interlock, radiation monitors, source exposure indicator lights, viewing and intercom systems, and clock and decayed source activity in the unit's computer; and

(e) The name of the individual who performed the periodic spot-check and the signature of the authorized medical physicist who reviewed the record of the spot-check.

(7) A licensee shall retain a copy of the procedures required by subsection (2) of this section until the licensee no longer possesses the remote afterloader unit.

Section 57. Periodic Spot-checks for Gamma Stereotactic Radiosurgery Units. (1) A licensee authorized to use a gamma stereotactic radiosurgery unit for medical use shall perform spot-checks of each gamma stereotactic radiosurgery facility and on each unit:

(a) Monthly;

(b) Before the first use of the unit on a given day; and

(c) After each source installation.

(2) A licensee shall:

(a) Perform the measurements required by subsection (1) of

this section in accordance with written procedures established by the authorized medical physicist. That individual shall not be required to actually perform the spot check measurements.

(b) Have the authorized medical physicist review the results of each spot-check within fifteen (15) days. The authorized medical physicist shall notify the licensee as soon as possible in writing of the results of each spot-check.

(3) To satisfy the requirements of subsection (1)(a) of this section, spot-checks shall, at a minimum:

(a) Assure proper operation of:

1. Treatment table retraction mechanism, using backup battery power or hydraulic backups with the unit off;

2. Helmet microswitches;

3. Emergency timing circuits; and

4. Stereotactic frames and localizing devices (trunnions).

(b) Determine:

1. The output for one (1) typical set of operating conditions measured with the dosimetry system described in Section 51(2) of this administrative regulation;

2. The difference between the measurement made in subsection (3)(b)1. of this section and the anticipated output, expressed as a percentage of the anticipated output (the value obtained at last full calibration corrected mathematically for physical decay);

3. Source output against computer calculation;

4. Timer accuracy and linearity over the range of use;

5. On-off error; and

6. Trunnion centricity.

(4) To satisfy the requirements of subsection (1)(b) and (c) of this section, spot-checks shall assure proper operation of:

(a) Electrical interlocks at each gamma stereotactic radiosurgery room entrance;

(b) Source exposure indicator lights on the gamma stereotactic radiosurgery unit, on the control console, and in the facility;

(c) Viewing and intercom systems;

(d) Timer termination;

(e) Radiation monitors used to indicate room exposures; and

(f) Emergency off buttons.

(5) A licensee shall arrange for the repair of any system identified in subsection (3) of this section that is not operating properly as soon as possible.

(6) If the results of the checks required in subsection (4) of this section indicate the malfunction of any system, a licensee shall lock the control console in the off position and shall not use the unit except as may be necessary to repair, replace, or check the malfunctioning system.

(7) A licensee shall retain a record of each spot-check for gamma stereotactic radiosurgery units required by this section for three (3) years. The record shall include:

(a) The date of the spot-check;

(b) The manufacturer's name, model number, and serial number for the gamma stereotactic radiosurgery unit and the instrument used to measure the output of the unit;

(c) An assessment of timer linearity and accuracy;

(d) The calculated on-off error;

(e) A determination of trunnion centricity;

(f) The difference between the anticipated output and the measured output;

(g) An assessment of source output against computer calculations;

(h) Notations indicating the operability of radiation monitors, helmet microswitches, emergency timing circuits, emergency off buttons, electrical interlocks, source exposure indicator lights, viewing and intercom systems, timer termination, treatment table retraction mechanism, and stereotactic frames and localizing devices (trunnions); and

(i) The name of the individual who performed the periodic spot-check and the signature of the authorized medical physicist who reviewed the record of the spot-check.

(8) A licensee shall retain a copy of the procedures required by subsection (2) of this section until the licensee no longer possesses the gamma stereotactic radiosurgery unit.

Section 58. Additional Technical Requirements for Mobile Remote Afterloader Units. (1) A licensee providing mobile remote afterloader service shall:

(a) Check survey instruments before medical use at each address of use or on each day of use, whichever is more frequent; and

(b) Account for all sources before departure from a client's address of use.

(2) In addition to the periodic spot-checks required by Section 56 of this administrative regulation a licensee authorized to use mobile afterloaders for medical use shall perform checks on each remote afterloader unit before use at each address of use. At a minimum, checks shall be made to verify the operation of:

(a) Electrical interlocks on treatment area access points;

(b) Source exposure indicator lights on the remote afterloader unit, on the control console, and in the facility;

(c) Viewing and intercom systems;

(d) Applicators, source transfer tubes, and transfer tube-applicator interfaces;

(e) Radiation monitors used to indicate room exposures;

(f) Source positioning (accuracy); and

(g) Radiation monitors used to indicate whether the source has returned to a safe shielded position.

(3) In addition to the requirements for checks in subsection (2) of this section, a licensee shall ensure overall proper operation of the remote afterloader unit by conducting a simulated cycle of treatment before use at each address of use.

(4) If the results of the checks required in subsection (2) of this section indicate the malfunction of any system, a licensee shall lock the control console in the off position and shall not use the unit except as may be necessary to repair, replace, or check the malfunctioning system.

(5) A licensee shall retain a record of each check for mobile remote afterloader units for three (3) years. The record shall include:

(a) The date of the check;

(b) The manufacturer's name, model number, and serial number of the remote afterloader unit;

(c) Notations accounting for all sources before the licensee departs from a facility;

(d) Notations indicating the operability of each entrance door electrical interlock, radiation monitors, source exposure indicator lights, viewing and intercom system, applicators, source transfer tubes, and transfer tube applicator interfaces, and source positioning accuracy; and

(e) The signature of the individual who performed the check.

Section 59. Radiation Surveys. (1) In addition to the survey requirement in 902 KAR 100:019, Section 12, a person licensed under this administrative regulation shall conduct surveys to ensure that the maximum radiation levels and average radiation levels from the surface of the main source safe with the source in the shielded position do not exceed the levels stated in the Sealed Source and Device Registry.

(2) The licensee shall conduct the survey required by subsection (1) of this section at installation of a new source and following repairs to the source shielding, the source driving unit, or other electronic or mechanical component that could expose the source, reduce the shielding around the source, or compromise the radiation safety of the unit or the source.

(3) A licensee shall maintain a record of radiation surveys of treatment units for the duration of use of the unit. The record shall include:

(a) The date of the measurements;

(b) The manufacturer's name, model number and serial number of the treatment unit, source, and instrument used to measure radiation levels;

(c) Each dose rate measured around the source while the unit is in the off position and the average of all measurements; and

(d) The signature of the individual who performed the test.

Section 60. Five (5) year Inspection for Teletherapy and Gamma Stereotactic Radiosurgery Units. (1) A licensee shall have

each teletherapy unit and gamma stereotactic radiosurgery unit fully inspected and serviced during source replacement or at intervals not to exceed five (5) years, whichever comes first, to assure proper functioning of the source exposure mechanism.

(2) This inspection and servicing may only be performed by persons specifically licensed to do so by the cabinet, U.S. Nuclear Regulatory Commission, or equivalent agreement state.

(3) A licensee shall maintain a record of the five (5) year inspections for teletherapy and gamma stereotactic radiosurgery units for the duration of use of the unit. The record shall contain:

(a) The inspector's radioactive materials license number;

(b) The date of inspection;

(c) The manufacturer's name and model number and serial number of both the treatment unit and source;

(d) A list of components inspected and serviced, and the type of service; and

(e) The signature of the inspector.

Section 61. Therapy-related Computer Systems. The licensee shall perform acceptance testing on the treatment planning system of therapy-related computer systems in accordance with published protocols accepted by nationally recognized bodies. At a minimum, the acceptance testing shall include, as applicable, verification of:

(1) The source-specific input parameters required by the dose calculation algorithm;

(2) The accuracy of dose, dwell time, and treatment time calculations at representative points;

(3) The accuracy of isodose plots and graphic displays;

(4) The accuracy of the software used to determine sealed source positions from radiographic images; and

(5) The accuracy of electronic transfer of the treatment delivery parameters to the treatment delivery unit from the treatment planning system.

Section 62. Other Medical Uses of Radioactive Material or Radiation from Radioactive Material. A licensee may use radioactive material or a radiation source approved for medical use which is not specifically addressed in Sections 30, 31, 33, 37, 45, and 46 of this administrative regulation if:

(1) The applicant or licensee has submitted the information required by Section 4(2) through (4) of this administrative regulation; and

(2) The applicant or licensee has received written approval from the cabinet in a license or license amendment and uses the material in accordance with the administrative regulations and specific conditions the cabinet considers necessary for the medical use of the material.

Section 63. Recentness of Training. The training and experience specified in Sections 64 through 77 of this administrative regulation shall have been obtained within the seven (7) years preceding the date of application or the individual shall have had related continuing education and experience since the required training and experience was completed.

Section 64. Training for Radiation Safety Officer. Except as provided in Section 67 of this administrative regulation, the licensee shall require an individual fulfilling the responsibilities of the radiation safety officer as provided in 902 KAR 100:072, Section 10 to be an individual who:

(1)***(a)*** Is certified by a specialty board whose certification process has been recognized by the cabinet, U.S. Nuclear Regulatory Commission, or an[~~equivalent~~] agreement state and who meets the requirements in subsections ***(2) and (3)***[~~(4) and (5)~~] of this section. To have its certification process recognized, a specialty board shall require all candidates for certification to:

1.a.[~~(a)1.~~] Hold a bachelor's or graduate degree from an accredited college or university in physical science or engineering or biological science with a minimum of twenty (20) college credits in physical science;

b.[~~2.~~] Have five (5) or more years of professional experience in health physics (graduate training may be substituted for no more than two (2) years of the required experience) including at least three (3) years in applied health physics; and

c.[~~3.~~] Pass an examination administered by diplomats of the specialty board, which evaluates knowledge and competence in radiation physics and instrumentation, radiation protection, mathematics pertaining to the use and measurements of radioactivity, radiation biology, and radiation dosimetry; or

2.a.[~~(b)1.~~] Hold a master's or doctor's degree in physics, medical physics, other physical science, engineering, or applied mathematics from an accredited college or university;

b.[~~2.~~] Have two (2) years of full-time practical training, two (2) years of supervised experience, or two (2) years of a combination of full-time practical training and supervised experience in medical physics***:***

(i)[~~; a.~~] Under the supervision of a medical physicist who is certified in medical physics by a specialty board recognized by the cabinet, U.S. Nuclear Regulatory Commission, or an[~~equivalent~~] agreement state; or

(ii)[~~b.~~] In clinical nuclear medicine facilities providing diagnostic or therapeutic services under the direction of physicians who meet the requirements for authorized users in 902 KAR 100:072, Sections 67, 69, or 70 of this administrative regulation; ***and***

c.[~~3.~~] Pass an examination, administered by diplomats of the specialty board, that assesses knowledge and competence in clinical diagnostic radiological or nuclear medicine physics and in radiation safety;

(b)[~~or (2)(a)~~] Has completed a structured educational program consisting of both:

1. 200 hours of classroom and laboratory training in the following areas:

a. Radiation physics and instrumentation;

b. Radiation protection;

c. Mathematics pertaining to the use and measurement of radioactivity;

d. Radiation biology; and

e. Radiation dosimetry; and

2. One (1) year of full-time radiation safety experience under the supervision of the individual identified as the radiation safety officer on a cabinet, U.S. Nuclear Regulatory Commission, or[~~equivalent~~] agreement state license or permit issued by a Commission master material licensee that authorizes similar type of use of radioactive material involving the following:

a. Shipping, receiving, and performing related radiation surveys;

b. Using and performing checks for proper operation of instruments used to determine the activity of dosages, survey meters, and instruments used to measure radionuclides;

c. Securing and controlling radioactive material;

d. Using administrative controls to avoid mistakes in the administration of radioactive material;

e. Using procedures to prevent or minimize radioactive contamination and using proper decontamination procedures;

f. Using emergency procedures to control radioactive material; and

g. Disposing of radioactive material; or

(c)1.[~~(3)(a)~~] Is a medical physicist who has been certified by a specialty board whose certification process has been recognized by the cabinet, U.S. Nuclear Regulatory Commission, or an[~~equivalent~~] agreement state pursuant to[~~under~~] 902 KAR 100:072, Section 65(1), and has experience in radiation safety for similar types of use of radioactive material for which the licensee is seeking the approval of the individual as radiation safety officer, and who meets the requirements in subsections ***(2) and (3)***[~~(4) and (5)~~] of this section; or

2.[~~(b)~~] Is an authorized user, authorized medical physicist, or authorized nuclear pharmacist identified on the licensee's license and has experience with the radiation safety aspects of similar types of use of radioactive material for which the individual has radiation safety officer responsibilities***;***

(2)[~~, and (4)~~] Has obtained written attestation, signed by a preceptor radiation safety officer, that the individual has satisfactorily completed the requirements [~~in subsections (5) and in (1)(a)1 and 2 or (1)(b)1 and 2 or (2)(a) or (3)(a) or (3)(b)~~]of this section, and has achieved a level of radiation safety knowledge

sufficient to function independently as a radiation safety officer for a medical use licensee; and

(3)[(5)] Has training in the radiation safety, regulatory issues, and emergency procedures for the types of use for which a licensee seeks approval. This training requirement may be satisfied by completing training that is supervised by a radiation safety officer, authorized medical physicist, authorized nuclear pharmacist, or authorized user, as appropriate, who is authorized for the type of use for which the licensee is seeking approval.

Section 65. Training for an Authorized Medical Physicist. Except as provided in Section 67 of this administrative regulation the licensee shall require the authorized medical physicist to be an individual who:

(1)***(a)*** Is certified by a specialty board whose certification process has been recognized by the cabinet, U.S. Nuclear Regulatory Commission, or an[equivalent] agreement state and who meets the requirements in ***paragraph (b)2. of this subsection and subsection (2)[subsection (2)(b) and (3)]*** of this section. To have its certification process recognized, a specialty board shall require all candidates for certification to:

1.[(a)] Hold a master's or doctor's degree in physics, medical physics, other physical science, engineering, or applied mathematics from an accredited college or university;

2.[(b)] Have[a] two (2) years of full-time practical training, two (2) years of supervised experience, or two (2) years of a combination of full-time practical training and supervised experience in medical physics:

a.[1.] Under the supervision of a medical physicist who is certified in medical physics by a specialty board recognized by the cabinet, U.S. Nuclear Regulatory Commission, or an[equivalent] agreement state; or

b.[2.] In clinical radiation facilities providing high-energy, external beam therapy (photons and electrons with energies greater than or equal to one (1) million electron volts) and brachytherapy services under the direction of physicians who meet the requirements[of authorized users] in Section 67, 74, or 77 of this administrative regulation***;[,]*** and

3.[(c)] Pass an examination, administered by diplomats of the specialty board, that assesses knowledge and competence in clinical radiation therapy, radiation safety, calibration, quality assurance, and treatment planning for external beam therapy, brachytherapy, and stereotactic radiosurgery; or

(b)[(2)(a)] Holds a master's or doctor's degree in physics, medical physics, other physical science, engineering, or applied mathematics from an accredited college or university; and has completed one (1) year of full-time training in medical physics and an additional year of full-time work experience under the supervision of an individual who meets the requirements for an authorized medical physicist for the type of use for which the individual is seeking authorization. This training and work experience shall be conducted in clinical radiation facilities that provides high-energy, external beam therapy (photons and electrons with energies greater than or equal to one (1) million electron volts) and brachytherapy services and shall include:

1. Performing sealed source leak test and inventories;

2. Performing decay corrections;

3. Performing full calibration and periodic spot checks of external beam treatment units, stereotactic radiosurgery units, and remote afterloading units as applicable; and

4. Conducting radiation surveys around external beam treatment units, stereotactic radiosurgery units, and remote afterloading units as applicable; and

(2)[(b)] Has obtained written attestation that the individual has satisfactorily completed the requirements ***[in subsection (3), and (1)(a) and (b), or subsection (2)(a) and (3)]***of this section, and has achieved a level of competency sufficient to function independently as an authorized medical physicist for each type of therapeutic medical unit for which the individual is requesting authorized medical physicist status. The written attestation shall be signed by a preceptor authorized medical physicist who meets the requirements in Sections 65 or 67 of this administrative regulation, or equivalent U.S. Nuclear Regulatory Commission[,] or[equivalent] agreement state requirements for an authorized medical physicist for each type of therapeutic medical unit for which the individual is requesting authorized medical physicist status; and

(3) Has training for the type of use for which authorization is sought that includes hands-on device operation, safety operations, clinical use, and the operation of a treatment planning system. This training requirement shall be satisfied by satisfactorily completing either a training program provided by the vendor or by training supervised by an authorized medical physicist authorized for the type of use for which the individual is seeking authorization.

Section 66. Training for an Authorized Nuclear Pharmacist. Except as provided in Section 67 of this administrative regulation the licensee shall require the authorized nuclear pharmacist to be a pharmacist who:

(1) Is certified by a specialty board whose certification process has been recognized by the cabinet, U.S. Nuclear Regulatory Commission, or an[equivalent] agreement state and who meets the requirements in subsection (2)(b) of this section. To have its certification process recognized, a specialty board shall require all candidates for certification to:

(a) Have graduated from a pharmacy program accredited by the American Council on Pharmaceutical Education (ACPE) or have passed the Foreign Pharmacy Graduate Examination Committee (FPGEC) examination;

(b) Hold a current, active license to practice pharmacy;

(c) Provide evidence of having acquired at least 4,000 hours of training and experience in nuclear pharmacy practice. Academic training may be substituted for no more than 2,000 hours of the required training and experience; and

(d) Pass an examination in nuclear pharmacy administered by diplomats of the specialty board, that assesses knowledge and competency in procurement, compounding, quality assurance, dispensing, distribution, health and safety, radiation safety, provision of information and consultation, monitoring patient outcomes, research and development; or

(2)(a) Has completed 700 hours in a structured educational program consisting of both:

1. 200 hours of classroom and laboratory training in the following areas:

a. Radiation physics and instrumentation;

b. Radiation protection;

c. Mathematics pertaining to the use and measurement of radioactivity;

d. Chemistry of radioactive material for medical use; and

e. Radiation biology; and

2. Supervised practical experience in a nuclear pharmacy involving:

a. Shipping, receiving, and performing related radiation surveys;

b. Using and performing checks for proper operation of instruments used to determine the activity of dosages, survey meters, and, if appropriate, instruments used to measure alpha- or beta-emitting radionuclides;

c. Calculating, assaying, and safely preparing dosages for patients or human research subjects;

d. Using administrative controls to avoid medical events in the administration of radioactive material; and

e. Using procedures to prevent or minimize radioactive contamination and using proper decontamination procedures; and

(b) Has obtained written attestation, signed by a preceptor authorized nuclear pharmacist, that the individual has satisfactorily completed the requirements in subsections (1)(a), (1)(b) and (1)(c) or (2)(a) of this section and has achieved a level of competency sufficient to function independently as an authorized nuclear pharmacist.

Section 67. Training for Experienced Radiation Safety Officer, Teletherapy or Medical Physicist, Authorized Medical Physicist, Authorized User, Nuclear Pharmacist and Authorized Nuclear Pharmacist. (1)(a) An individual identified as a radiation safety officer, a teletherapy or medical physicist, or a nuclear pharmacist on a cabinet, U.S. Nuclear Regulatory Commission, or[equivalent]

agreement state license or a permit issued by the cabinet, U.S. Nuclear Regulatory Commission, or an[~~equivalent~~] agreement state broad scope licensee or master material license permit or by a master material license permittee of broad scope before October 24, 2005 shall not be required to comply with the training requirements of Section 64, 65, or 66, of this administrative regulation respectively:

(b) An individual identified as a radiation safety officer, an authorized medical physicist, or an authorized nuclear pharmacist on a cabinet, U.S. Nuclear Regulatory Commission, or[~~equivalent~~] agreement state license or a permit issued by the cabinet, U.S. Nuclear Regulatory Commission, or an agreement state broad scope licensee or master material license permit or master material licensee permittee of broad scope between October 24, 2002 and April 29, 2005 is not required to comply with the training requirements of Section 64, 65, or 66 of this administration regulation respectively.

(2)(a) Physicians, dentists, or podiatrists identified as authorized users for the medical use of radioactive material on a license issued by the cabinet, U.S. Nuclear Regulatory Commission, or an[~~equivalent~~] agreement state, a permit issued by a Commission master material licensee, a permit issued by the cabinet, U.S. Nuclear Regulatory Commission, or an[~~equivalent~~] agreement state broad scope licensee, or a permit issued by a Commission master material license broad scope permittee before October 24, 2002 who perform only those medical uses for which they were authorized on that date shall not be required to comply with the training requirements of 902 KAR 100:072, Sections 68 through 77.

(b) Physicians, dentists, or podiatrists identified as authorized users for the medical use of radioactive material on a license issued by the cabinet, U.S. Nuclear Regulatory Commission, or an[~~equivalent~~] agreement state, a permit issued by a Commission master material licensee, a permit issued by the cabinet, U.S. Nuclear Regulatory Commission or an agreement state broad scope licensee or a permit issued by a[~~U.S. Nuclear Regulatory~~] Commission master material license broad scope permittee who performs only those medical uses for which they were authorized between October 24, 2002 and April 29, 2005 shall not be required to comply with the training requirements of Sections 68 through 77 of this administrative regulation.

Section 68. Training for Uptake, Dilution, and Excretion Studies. Except as provided in Section 67 of this administrative regulation the licensee shall require an authorized user of unsealed radioactive material for the uses authorized pursuant to[~~under~~] Section 30 of this administrative regulation to be a physician who:

(1)***[(a)]*** Is certified by a medical specialty board whose certification process[~~includes all of the requirements in subsection (3)(b) of this section and who~~] has been recognized by the cabinet, U.S. Nuclear Regulatory Commission or an[~~equivalent~~] agreement state and who meets the requirements in subsection (3)(b) of this section. To have its certification process recognized, a specialty board shall require all candidates for certification to:

(a)[1.] Complete sixty (60) hours of training and experience in basic radionuclide handling techniques and radiation safety applicable to the medical use of unsealed radioactive material for uptake, dilution, and excretion studies as described in subsection (3)(a)1 through 3(a)2 of this section; and

(b)[2.] Pass an examination, administered by diplomats of the specialty board, that assesses knowledge and competence in radiation safety, radionuclide handling, and quality control;***[or]***

(2) Is an authorized user under Section 69 or 70[,] of this administrative regulation, or equivalent U.S. Nuclear Regulatory Commission or[~~equivalent~~] agreement state requirements; or

(3)(a) Has completed sixty (60) hours of training and experience, including a minimum of eight (8) hours of classroom and laboratory training, in basic radionuclide handling techniques applicable to the medical use of unsealed radioactive material for uptake, dilution, and excretion studies. The training and experience shall include:

1. Classroom and laboratory training, in the following areas;

a. Radiation physics and instrumentation;

b. Radiation protection;

c. Mathematics pertaining to the use and measurement of radioactivity;

d. Chemistry of radioactive material for medical use; and

e. Radiation biology; and

2. Work experience, under the supervision of an authorized user who meets the requirements in Section 67, 68, 69, or 70, of this administrative regulation, or equivalent U.S. Nuclear Regulatory Commission[,] or[~~equivalent~~] agreement state requirements, involving:

a. Ordering, receiving, and unpacking radioactive materials safely and performing the related radiation surveys;

b. Performing quality control procedures on instruments used to determine the activity of dosages and performing checks for proper operation of survey meters;

c. Calculating, measuring, and safely preparing patient or human research subject dosages;

d. Using administrative controls to prevent a medical event involving the use of unsealed radioactive material;

e. Using procedures to contain spilled radioactive material safely and using proper decontamination procedures; and

f. Administering dosages of radioactive drugs to patients or human research subjects; and

(b) Has obtained written attestation, signed by a preceptor authorized user who meets the requirements in Section 67, 68, 69, or 70 of this administrative regulation, or equivalent U.S. Nuclear Regulatory Commission[,] or[~~equivalent~~] agreement state requirements, that the individual has satisfactorily completed the requirements in subsection (1)(a) or (3)(a) of this section and has achieved a level of competency sufficient to function independently as an authorized user for the medical uses authorized pursuant to[~~under~~] Section 30 of this administrative regulation.

Section 69. Training for Imaging and Localization Studies. Except as provided in Section 67 of this administrative regulation the licensee shall require an authorized user of unsealed radioactive material for the uses authorized pursuant to[~~under~~] Section 31 of this administrative regulation to be a physician who:

(1) Is certified by a medical specialty board whose certification process has been recognized by the cabinet, U.S. Nuclear Regulatory Commission, or an[~~equivalent~~] agreement state and who meets the requirements in subsection (3)(b) of this section. To have its certification process recognized, a specialty board shall require all candidates for certification to:

(a) Complete 700 hours of training and experience in basis radionuclide handling techniques and radiation safety applicable to the medical use of unsealed radioactive material for imaging and localization studies that includes the topics listed in subsection (3)(a)1 through (3)(a)2 of this section; and

(b) Pass an examination, administered by diplomats of the specialty board, which assesses knowledge and competence in radiation safety, radionuclide handling, and quality control;***[or]***

(2) Is an authorized user pursuant to[~~under~~] Section 70 of this administrative regulation and meets the requirements in subsection (3)(a)2.g of this section, or equivalent U.S. Nuclear Regulatory Commission[,] or[~~equivalent~~] agreement state requirements; or

(3)(a) Has completed 700 hours of training and experience, including a minimum of eighty (80) hours of classroom and laboratory training, in basic radionuclide handling techniques applicable to the medical use of unsealed radioactive material for imaging and localization studies. The training and experience shall include, at a minimum:

1. Classroom and laboratory training in the following areas:

a. Radiation physics and instrumentation;

b. Radiation protection;

c. Mathematics pertaining to the use and measurement of radioactivity;

d. Chemistry of radioactive material for medical use; and

e. Radiation biology; and

2. Work experience, under the supervision of an authorized user, who meets the requirements in Section 67, 69 or 70 and Section 69(3)(a)2.g of this administrative regulation, or equivalent U.S. Nuclear Regulatory Commission[,] or[~~equivalent~~] agreement

state requirements, involving:

a. Ordering, receiving, and unpacking radioactive materials safely and performing the related radiation surveys;

b. Performing quality control procedures on instruments used to determine the activity of dosages and performing checks for proper operation of survey meters;

c. Calculating, measuring, and safely preparing patient or human research subject dosages;

d. Using administrative controls to prevent a medical event involving the use of unsealed radioactive material;

e. Using procedures to safely contain spilled radioactive material and using proper decontamination procedures;

f. Administering dosages of radioactive drugs to patients or human research subjects; and

g. Eluting generator systems appropriate for preparation of radioactive drugs for imaging and localization studies, measuring and testing the eluate for radionuclidic purity, and processing the eluate with reagent kits to prepare labeled radioactive drugs; and

(b) Has obtained written attestation, signed by a preceptor authorized user who meets the requirements in Sections 67, 69, or 70 and[~~or~~] Section 69(3)(a)2.g of this administrative regulation, or equivalent U.S. Nuclear Regulatory Commission[~~,~~] or[~~equivalent~~] agreement state requirements, that the individual has satisfactorily completed the requirements in subsection (1)(a) or (3)(a) of this section and has achieved a level of competency sufficient to function independently as an authorized user for the medical uses authorized pursuant to[~~under~~] Sections 30 and 31 of this administrative regulation.

Section 70. Training for Use of Unsealed Radioactive Material for Which a Written Directive Is Required. Except as provided in Section 67 of this administrative regulation the licensee shall require an authorized user of unsealed radioactive material for the uses authorized pursuant to[~~under~~] Section 33 of this administrative regulation to be a physician who:

(1) Is certified by a medical specialty board whose certification process has been recognized by the cabinet, U.S. Nuclear Regulatory Commission or an[~~equivalent~~] agreement state, and who meets the requirements in subsection (2)(a)2.f and (b) of this section. To be recognized, a specialty board shall require all candidates for certification to:

(a) Successfully complete residency training in a radiation therapy or nuclear medicine training program or a program in a related medical specialty. These residency training programs shall include 700 hours of training and experience as described in subsection (2)(a)1 through 2.e of this section. Eligible training programs shall be approved by:

1. Residency Review Committee of the Accreditation Council for Graduate Medical Education;

2. Royal College of Physicians and Surgeons of Canada; or

3. Committee on Post-Graduate Training of the American Osteopathic Association; and

(b) Pass an examination, administered by the diplomats of the specialty board, which tests knowledge and competence in radiation safety, radionuclide handling, quality assurance, and clinical use of unsealed radioactive material for which a written directive is required; or

(2)(a) Has completed 700 hours of training and experience, including a minimum of[~~or~~] 200 hours of classroom and laboratory training, in basic radionuclide handling techniques applicable to the medical use of unsealed radioactive material requiring a written directive. The training and experience shall include:

1. Classroom and laboratory training in the following areas:

a. Radiation physics and instrumentation;

b. Radiation protection;

c. Mathematics pertaining to the use and measurement of radioactivity;

d. Chemistry of radioactive material for medical use; and

e. Radiation biology; and

2. Work experience, under the supervision of an authorized user who meets the requirements in this section, or Section 67[~~of Sections 67 and 70~~] of this administrative regulation, or equivalent U.S. Nuclear Regulatory Commission[~~,~~] or[~~equivalent~~] agreement state requirements. A supervising authorized user, who meets the requirements in ***this subsection***[~~***Section 70(2) of this administrative regulation***~~***]***, shall have experience in administering dosages in the same dosage category or categories (***clause f. of this subparagraph***[~~***Section 70(2)(a)2.f.***~~***]***) of this administrative regulation as the individual requesting authorized user status. The work experience shall involve:

a. Ordering, receiving, and unpacking radioactive materials safely and performing the related radiation surveys;

b. Performing quality control procedures on instruments used to determine the activity of dosages, and performing checks for proper operation of survey meters;

c. Calculating, measuring, and safely preparing patient or human research subject dosages;

d. Using administrative controls to prevent a medical event involving the use of unsealed radioactive material;

e. Using procedures to contain spilled radioactive material safely and using proper decontamination procedures;

f. Administering dosages of radioactive drugs to patients or human research subjects involving a minimum of three (3) cases in each of the following categories for which the individual is requesting authorized user status:

(i) Oral administration of less than or equal to 1.22 Gigabecquerels (33 millicuries) of sodium iodide I-131, for which a written directive is required;

(ii) Oral administration of greater than 1.22 Gigabecquerels (33 millicuries) of sodium iodide I-131;

(iii) Parenteral administration of any beta emitter or a photon-emitting radionuclide with a photon energy less than 150 keV, for which a written directive is required; or

(iv) Parenteral administration of any other radionuclide, for which a written directive is required; and

(b) Has obtained written attestation that the individual has satisfactorily completed the requirements in subsection (1)(a) and (2)(a)2.f or (2)(a) of this section, and has achieved a level of competency sufficient to function independently as an authorized user for the medical uses authorized pursuant to[~~under~~] Section 33 of this administrative regulation. The written attestation shall be signed by a preceptor authorized user who meets the requirements of this section, and section 67 of this administrative regulation, or equivalent U.S. Nuclear Regulatory Commission[~~,~~] or[~~equivalent~~] agreement state requirements. The preceptor authorized user, who meets the requirements in subsection (2) of this section, shall have experience in administering dosages in the same dosage category or categories (Section 70(2)(a)2.f) of this administrative regulation as the individual requesting authorized user status.

Section 71. Training for the oral administration of sodium iodide I-131 requiring a written directive in quantities less than or equal to 1.22 Gigabecquerels (33 millicuries). Except as provided in Section 67 of this administrative regulation, the licensee shall require an authorized user for the oral administration of sodium iodide I-131 requiring a written directive in quantities less than or equal to 1.22 Gigabecquerels (33 millicuries), to be a physician who:

(1) Is certified by a medical specialty board whose certification process includes all of the requirements in subsection (3)(a) and (b) of this section and whose certification process has been recognized by the cabinet, U.S. Nuclear Regulatory Commission, or an[~~equivalent~~] agreement state and who meets the requirements in subsection (3)(c) of this section;

(2) Is an authorized user pursuant to[~~under~~] Section 70 of this administrative regulation for uses listed in Section 70(2)(a)2.f.(i) or (ii), or Section 72 of this administrative regulation, or equivalent U.S. Nuclear Regulatory Commission[~~,~~] or[~~equivalent~~] agreement state requirements; or

(3)(a) Has successfully completed eighty (80) hours of classroom and laboratory training, applicable to the medical use of sodium iodide I–131 for procedures requiring a written directive. The training shall include:

1. Radiation physics and instrumentation;

2. Radiation protection;

3. Mathematics pertaining to the use and measurement of

radioactivity;

4. Chemistry of radioactive material for medical use; and

5. Radiation biology; and

(b) Has work experience, under the supervision of an authorized user who meets the requirements in Section 67, 70, 71,, or 72 of this administrative regulation, or equivalent U.S. Nuclear Regulatory Commission[,] or[equivalent] agreement state requirements. A supervising authorized user who meets the requirements in Section 70 (2)(a) of this administrative regulation shall have experience in administering dosages as specified in Section 70(2)(a)2.f.(i) or (ii) of this administrative regulation. The work experience shall involve:

1. Ordering, receiving, and unpacking radioactive materials safely and performing the related radiation surveys;

2. Performing quality control procedures on instruments used to determine the activity of dosages and performing checks for proper operation for survey meters;

3. Calculating, measuring, and safely preparing patient or human research subject dosages;

4. Using administrative controls to prevent a medical event involving the use of radioactive material;

5. Using procedures to contain spilled radioactive material safely and using proper decontamination procedures; and

6. Administering dosages to patients or human research subjects, that includes at least three (3) cases involving the oral administration of less than or equal to 1.22 Gigabecquerels (33 millicuries) of sodium iodide I-131; and

(c) Has obtained written attestation that the individual has satisfactorily completed the requirements in subsection (3)(a) and (b) of this section and has achieved a level of competency sufficient to function independently as an authorized user for medical uses authorized pursuant to[under] Section 33 of this administrative regulation. The written attestation shall be signed by a preceptor authorized user who meets the requirements in Section 67, 70, 71, or 72 of this administrative regulation, or equivalent U.S. Nuclear Regulatory Commission[,] or[equivalent] agreement state requirements. A preceptor authorized user, who meets the requirement in Section 70(2) of this administrative regulation shall also have experience in administering dosages as specified in Section 70(2)(a)2.f.(i) or (ii) of this administrative regulation.

Section 72. Training for the oral administration of sodium iodide I-131 requiring a written directive in quantities greater than 1.22 Gigabecquerels (33 millicuries). Except as provided in Section 67 of this administrative regulation the licensee shall require an authorized user for the oral administration of sodium iodide I-131 requiring a written directive in quantities greater than 1.22 Gigabecquerels (33 millicuries), to be a physician who:

(1) Is certified by a medical specialty board whose certification process includes all of the requirements in subsection (3)(a) and (b) of this section, and whose certification has been recognized by the cabinet, U.S. Nuclear Regulatory Commission, or an[equivalent] agreement state and who meets the requirements in subsection of (3)(c) of this section; or

(2) Is an authorized user pursuant to[under] Section 70 of this administrative regulation for uses listed in Section 70(2)(a)2.f.(ii) of this administrative regulation, or equivalent U.S. Nuclear Regulatory Commission[,] or[equivalent] agreement state requirements; or

(3)(a) Has successfully completed eighty (80) hours of classroom and laboratory training, applicable to the medical use of sodium iodide I-131 for procedures requiring a written directive. The training shall include:

1. Radiation physics and instrumentation;

2. Radiation protection; and

3. Mathematics pertaining to the use and measurement of radioactivity;

4. Chemistry of radioactive material for medical use; and

5. Radiation biology;

(b) Has work experience, under the supervision of an authorized user who meets the requirements in Section 67, 70, or[and] 72 of this administrative regulation, or equivalent U.S. Nuclear Regulatory Commission[,] or[equivalent] agreement state requirements. A supervising authorized user, who meets the requirements in Section 70(2) of this administrative regulation, shall also have experience in administering dosages as specified in Section 70(2)(a)2.f.(ii) of this administrative regulation. The work experience shall involve:

1. Ordering, receiving, and unpacking radioactive materials safely and performing the related radiation surveys;

2. Performing quality control procedures on instruments used to determine the activity of dosages and performing checks for proper operation for survey meters;

3. Calculating, measuring, and safely preparing patient or human research subject dosages;

4. Using administrative controls to prevent a medical event involving the use of radioactive material;

5. Using procedures to contain spilled radioactive material safely and using proper decontamination procedures; and

6. Administering dosages to patients or human research subjects, that includes at least three (3) cases involving the oral administration of greater than 1.22 Gigabecquerels (33 millicuries) of sodium iodide I-131; and

(c) Has obtained written attestation that the individual has satisfactorily completed the requirements in subsection (3)(a) and (b) of this section and has achieved a level of competency sufficient to function independently as an authorized user for medical uses authorized pursuant to[under] Section 33 of this administrative regulation. The written attestation shall be signed by a preceptor authorized user who meets the requirements in Section 67, 70 or 72 of this administrative regulation, or equivalent U.S. Nuclear Regulatory Commission[,] or[equivalent] agreement state requirements. A preceptor authorized user, who meets the requirements in Section 70(2) of this administrative regulation, shall have experience in administering dosages as specified in Section 70(2)(a)2.f.(ii).

Section 73. Training for the Parenteral Administration of Unsealed Radioactive Material Requiring a Written Directive. Except as provided in Section 67 of this administrative regulation, the licensee shall require an authorized user for the parenteral administration requiring a written directive, to be a physician who:

(1) Is an authorized user pursuant to[under] Section 70 for uses listed in Section 70(2)(a)2.f.(iii) or Section 70(2)(a)2.f.(iv)[or] of this administrative regulation, or equivalent U.S. Nuclear Regulatory Commission[,] or[equivalent] agreement state requirements[regulations]; or

(2)(a)1. Is an authorized user pursuant to[under] Sections 74 or 77 of this administrative regulation, or equivalent U.S. Nuclear Regulatory Commission[,] or[equivalent] agreement state and who meets the requirements in paragraph (b) of this subsection[(4) of this section]; or

2.[(3)] Is certified by a medical specialty board whose certification process has been recognized by the cabinet, U.S. Nuclear Regulatory Commission, or an[equivalent] agreement state pursuant to[under] Sections 74 or 77 of this administrative regulation; and who meets the requirements in paragraph (b) of this subsection[(4) of this section]; and[or]

(b)1.[(4)(a)] Has successfully completed eighty (80) hours of classroom and laboratory training, applicable to parenteral administrations, for which a written directive is required, of a[any] beta emitter or a[any] photon-emitting radionuclide with a photon energy less than[that] 150 keV, or[and/or] parenteral administration of other radionuclides[any other radionuclide] for which a written directive is required. The training shall include:

a.[1.] Radiation physics and instrumentation;

b.[2.] Radiation protection;

c.[3.] Mathematics pertaining to the use and measurement of radioactivity;

d.[4.] Chemistry of radioactive material for medical use; and

e.[5.] Radiation biology;[and]

2.[(b)] Has work experience, under the supervision of an authorized user who meets the requirements in Sections 67, 70, or[and] 73 of this administrative regulation, or equivalent U.S. Nuclear Regulatory Commission[,] or[equivalent] agreement state

requirements, in the parenteral administration, for which a written directive is required, of a[any] beta emitter, or a[any] photon-emitting radionuclide with a photon energy less than 150 keV, or[and/or] parenteral administration of other radionuclides[any other radionuclide] for which a written directive is required. A supervising authorized user who meets the requirements in Section 70 of this administrative regulation shall have experience in administering dosages as specified in Section 70(2)(a)2.f.(iii) or (iv) of this administrative regulation or both [and/or Section 70(2)(a)2.f.(iv)]. The work experience shall involve:

a.[1.] Ordering, receiving, and unpacking radioactive materials safely, and performing the related radiation surveys;

b.[2.] Performing quality control procedures on instruments used to determine the activity of dosages, and performing checks for proper operation of survey meters;

c.[3.] Calculating, measuring, and safely preparing patient or human research subjects dosages;

d.[4.] Using administrative controls to prevent a medical event involving the use of unsealed radioactive material;

e.[5.] Using procedures to contain spilled radioactive material safely, and using proper decontamination procedures; and

f.[6.] Administering dosages to patients or human research subjects, that include at least three (3) cases involving the parenteral administration, for which a written directive is required, of a[any] beta emitter, or photon-emitting radionuclide with a photon energy less than 150 keV, or a minimum of[and/or at least] three (3) cases involving the parenteral administration of other radionuclides[any other radionuclide], for which a written directive is required, or both; and

3.[(c)] Has obtained written attestation that the individual has satisfactorily completed the requirements in paragraph (a)1. or 2. of this subsection[(2) or (3) of this section], and has achieved a level of competency sufficient to function independently as an authorized user for the parenteral administration of unsealed radioactive material requiring a written directive. The written attestation shall be signed by a preceptor authorized user who meets the requirements in Sections 67, 70, or 73 of this administrative regulation, U.S. Nuclear Regulatory Commission, or equivalent agreement state requirements. A preceptor authorized user, who meets the requirements in Section 70 of this administrative regulation, shall have experience in administering dosages as specified in Section 70(2)(a)2.f.(iii) or (iv)[and/or Section 70(2)(a)2.f.(iv)] of this administrative regulation or both.

Section 74. Training for Use of Manual Brachytherapy Sources. Except as provided in Section 67 of this administrative regulation, the licensee shall require an authorized user of a manual brachytherapy source for the uses authorized pursuant to[under] Section 37 of this administrative regulation to be a physician who:

(1) Is certified by a medical specialty board whose certification process has been recognized by the cabinet, U.S. Nuclear Regulatory Commission, or an[equivalent] agreement state and who meets the requirements in (2)(c) of this section. To have its certification process recognized, a specialty board shall require all candidates for certification to:

(a) Successfully complete a minimum or three (3) years of residency training in a radiation oncology program approved by the:

1. Residency Review Committee of the Accreditation Council for Graduate Medical Education; or

2. Royal College of Physicians and Surgeons of Canada; or

3. Committee on Post-Graduate Training of the American Osteopathic Association; and

(b) Pass an examination, administered by diplomats of the specialty board, that tests knowledge and competence in radiation safety, radionuclide handling, treatment planning, quality assurance, and clinical use of manual brachytherapy; or

(2)(a) Has completed a structured educational program in basic radionuclide handling techniques applicable to the use of manual brachytherapy sources that includes:

1. 200 hours of classroom and laboratory training in the following areas:

a. Radiation physics and instrumentation;

b. Radiation protection;

c. Mathematics pertaining to the use and measurement of radioactivity; and

d. Radiation biology; and

2. 500 hours of work experience, under the supervision of an authorized user who meets the requirements in this section, or Section 67[Sections 67 and 74] of this administrative regulation, or equivalent U.S. Nuclear Regulatory Commission[,] or[equivalent] agreement state requirements at a medical institution, involving:

a. Ordering, receiving, and unpacking radioactive materials safely and performing the related radiation surveys;

b. Checking survey meters for proper operation;

c. Preparing, implanting, and removing brachytherapy sources;

d. Maintaining running inventories of material on hand;

e. Using administrative controls to prevent a medical event involving the use of radioactive material;

f. Using emergency procedures to control radioactive material; and

(b) Has completed three (3) years of supervised clinical experience in radiation oncology, under an authorized user who meets the requirements in this section, or Section 67[in sections 67 and 74] of this administrative regulation, or equivalent U.S. Nuclear Regulatory Commission[,] or[equivalent] agreement state requirements, as part of a formal training program approved by the Residency Review Committee for Radiation Oncology of the Accreditation Council for Graduate Medical Education or the Royal College of Physicians and Surgeons of Canada or the Committee on Postdoctoral Training of the American Osteopathic Association. This experience may be obtained concurrently with the supervised work experience required by subsection (2)(a)2. of this section; and

(c) Has obtained written attestation, signed by a preceptor authorized user who meets the requirements in[of] this section, or Section 67[and Sections 67 and 74] of this administrative regulation, or equivalent U.S. Nuclear Regulatory Commission[,] or[equivalent] agreement state requirements, that the individual has satisfactorily completed the requirements in subsection (1)(a) or (2)(a) and (b) of this section and has achieved a level of competency sufficient to function independently as an authorized user of manual brachytherapy sources for the medical uses authorized pursuant to[under] Section 37 of this administrative regulation.

Section 75. Training for Ophthalmic Use of Strontium-90. Except as provided in Section 67 of this administrative regulation the licensee shall require the authorized user of strontium-90 for ophthalmic radiotherapy to be a physician who:

(1) Is an authorized user pursuant to[under] Section 74 of this administrative regulation, or equivalent U.S. Nuclear Regulatory Commission[,] or[equivalent] agreement state requirements; or

(2)(a) Has completed twenty-four (24) hours of classroom and laboratory training applicable to the medical use of strontium-90 for ophthalmic radiotherapy. The training shall include:

1. Radiation physics and instrumentation;

2. Radiation protection;

3. Mathematics pertaining to the use and measurement of radioactivity; and

4. Radiation biology; and

(b) Supervised clinical training in ophthalmic radiotherapy under the supervision of an authorized user at a medical institution, clinic, or private practice that includes the use of strontium-90 for the ophthalmic treatment of five (5) individuals. This supervised clinical training shall involve:

1. Examination of each individual to be treated;

2. Calculation of the dose to be administered;

3. Administration of the dose; and

4. Follow up and review of each individual's case history; and

(c) Has obtained written attestation, signed by a preceptor authorized user who meets the requirements in Sections 67, 74, or[and] 75 of this administrative regulation, or equivalent U.S. Nuclear Regulatory Commission[,] or[equivalent] agreement state requirements, that the individual has satisfactorily completed the

requirements in subsection (2) of this section and has achieved a level of competency sufficient to function independently as an authorized user of strontium-90 for ophthalmic use.

Section 76. Training for use of sealed sources for diagnosis. Except as provided in Section 67 of this administrative regulation, the licensee shall require the authorized user of a diagnostic sealed source for use in a device authorized pursuant to[~~under~~] Section 45 of this administrative regulation to be a physician, dentist, or podiatrist who:

(1)***(a)*** Is certified by a specialty board whose certification process includes all of the requirements in ***paragraph (b) of this subsection and*** subsection (2) ***[~~and (3)~~]***of this section and whose certification has been recognized by the cabinet, U.S. Nuclear Regulatory Commission, or an[~~equivalent~~] agreement state; or

(b)[~~(2)~~] Has completed eight (8) hours of classroom and laboratory training in basic radionuclide handling techniques specifically applicable to the use of the device. The training shall include:

1.[~~(a)~~] Radiation physics and instrumentation;

2.[~~(b)~~] Radiation protection;

3.[~~(c)~~] Mathematics pertaining to the use and measurement of radioactivity; and

4.[~~(d)~~] Radiation biology; and

(2)[~~(3)~~] Has completed training in the use of the device for the uses requested.

Section 77. Training for Use of Remote Afterloader Units, Teletherapy Units, and Gamma Stereotactic Radiosurgery Units. Except as provided in Section 67 of this administrative regulation, the licensee shall require an authorized user of a sealed source for a use authorized pursuant to[~~under~~] Section 46 of this administrative regulation to be a physician who:

(1) Is certified by a medical specialty board whose certification process has been recognized by the cabinet, U.S. Nuclear Regulatory Commission, or an[~~equivalent~~] agreement state and who meets the requirements in (2)(c) and (3) of this section. To have its certification recognized, a specialty board shall require all candidates for certification to:

(a) Successfully complete a minimum of three (3) years of residency training in a radiation therapy program approved by the:

1. Residency Review Committee of the Accreditation Council for Graduate Medical Education;

2. Royal College of Physicians and Surgeons of Canada; or

3. Committee on Post-Graduate Training of the American Osteopathic Association; and

(b) Pass an examination, administered by diplomats of the specialty board, which tests knowledge and competence in radiation safety, radionuclide handling, treatment planning, quality assurance, and clinical use of stereotactic radiosurgery, remote afterloaders and external beam therapy; or

(2)(a) Has completed a structured educational program in basic radionuclide techniques applicable to the use of a sealed source in a therapeutic medical unit that includes:

1. 200 hours of classroom and laboratory training in the following areas:

a. Radiation physics and instrumentation;

b. Radiation protection;

c. Mathematics pertaining to the use and measurement of radioactivity; and

d. Radiation biology; and

2. 500 hours of work experience, under the supervision of an authorized user who meets the requirements in this section, or Section 67[~~Sections 67 and 77~~] of this administrative regulation, or equivalent U.S. Nuclear Regulatory Commission[~~,~~] or[~~equivalent~~] agreement state requirements at a medical institution, involving:

a. Reviewing full calibration measurements and periodic spot-checks;

b. Preparing treatment plans and calculating treatment doses and times;

c. Using administrative controls to prevent a medical event involving the use of radioactive material;

d. Implementing emergency procedures to be followed in the event of the abnormal operation of the medical unit or console;

e. Checking and using survey meters; and

f. Selecting the proper dose and how it is to be administered; and

(b) Has completed three (3) years of supervised clinical experience in radiation therapy, under an authorized user who meets the requirements in this section, or Section 67[~~Sections 67 and 77~~] of this administrative regulation, or equivalent U.S. Nuclear Regulatory Commission[~~,~~] or[~~equivalent~~] agreement state requirements, as part of a formal training program approved by the Residency Review Committee for Radiation Oncology of the Accreditation Council for Graduate Medical Education or the Royal College of Physicians and Surgeons of Canada or the Committee on Postdoctoral Training of the American Osteopathic Association. This experience may be obtained concurrently with the supervised work experience required by subsection (2)(a)2 of this section; and

(c) Has obtained written attestation that the individual has satisfactorily completed the requirements in subsection (1)(a) or (2)(a) and (b), and (3) of this section, and has achieved a level of competency sufficient to function independently as an authorized user of each type of therapeutic medical unit for which the individual is requesting authorized user status. The written attestation shall be signed by a preceptor authorized user who meets the requirements in this section, or Section 67[~~Sections 67 and 77~~] of this administrative regulation, or equivalent U.S. Nuclear Regulatory Commission[~~,~~] or[~~equivalent~~] agreement state requirements for an authorized user for each type of therapeutic medical unit for which the individual is requesting authorized user status; and

(3) Has received training in device operation, safety procedures, and clinical use for the type of use for which authorization is sought, This training requirement may be satisfied by satisfactory completion of a training program provided by the vendor for new users or by receiving training supervised by an authorized user or authorized medical physicist, as appropriate, who is authorized for the type of use for which the individual is seeking authorization.

Section 78. Alternative Training. During a two (2) year period after the effective date of October 24, 2005, alternative training and experience requirements shall be available. Licensees shall have the option of complying with either the training requirements of Section 78 of this administrative regulation or the new requirements in Sections 65 through 77 of this administrative regulation. After October 24, 2007, licensee shall not have the option of using Section 78 of this administrative regulation. Except as provided in Section 67 of this administrative regulation, the licensee shall require for:

(1) A radiation safety officer, an individual fulfilling the responsibilities of the radiation safety officer as provided in Section 10 of this administrative regulation to be an individual who:

(a) Is certified by the:

1. American Board of Health Physics in Comprehensive Health Physics;

2. American Board of Radiology;

3. American Board of Nuclear Medicine;

4. American Board of Science in Nuclear Medicine;

5. Board of Pharmaceutical Specialties in Nuclear Pharmacy;

6. American Board of Medical Physics in radiation oncology physics;

7 Royal College of Physicians and Surgeons of Canada in nuclear medicine;

8. American Osteopathic Board of Radiology; or

9. American Osteopathic Board of Nuclear Medicine;

(b) Has had classroom and laboratory training and experience as follows:

1. 200 hours of classroom and laboratory training that includes:

a. Radiation physics and instrumentation;

b. Radiation protection;

c. Mathematics pertaining to the use and measurement of radioactivity;

d. Radiation biology; and

e. Radiopharmaceutical chemistry; and

2. One (1) year of full time experience as a radiation safety technologist at a medical institution under the supervision of the individual identified as the radiation safety officer on a cabinet, U.S. Nuclear Regulatory Commission, or equivalent agreement state license that authorizes the medical use of radioactive material; or

(c) Is an authorized user identified on the licensee's license.

(2) Authorized user of a radiopharmaceutical for uptake, dilution, and excretion in Section 30(1) of this administrative regulation to be a physician who:

(a) Is certified in:

1. Nuclear medicine by the American Board of Nuclear Medicine;

2. Diagnostic radiology by the American Board of Radiology;

3. Diagnostic radiology or radiology by the American Osteopathic Board of Radiology;

4. Nuclear medicine by the Royal College of Physicians and Surgeons of Canada; or

5. American Osteopathic Board of Nuclear Medicine in nuclear medicine;

(b) Has had classroom and laboratory training in basic radioisotope handling techniques applicable to the use of prepared radiopharmaceuticals, and supervised clinical experience as follows:

1. Forty (40) hours of classroom and laboratory training that includes:

a. Radiation physics and instrumentation;

b. Radiation protection;

c. Mathematics pertaining to the use and measurement of radioactivity;

d. Radiation biology; and

e. Radiopharmaceutical chemistry; and

2. Twenty (20) hours of supervised clinical experience under the supervision of an authorized user and that includes:

a. Examining patients or human research subjects and reviewing their case histories to determine their suitability for radioisotope diagnosis, limitations, or contraindications;

b. Selecting the suitable radiopharmaceuticals and calculating and measuring the dosages;

c. Administering dosages to patients or human research subjects and using syringe radiation shields;

d. Collaborating with the authorized user in the interpretation of radioisotope test results; and

e. Patient or human research subject follow up; or

(c) Has successfully completed a six (6) month training program in nuclear medicine as part of a training program that has been approved by the Accreditation Council for Graduate Medical Education and that included classroom and laboratory training, work experience, and supervised clinical experience in all the topics identified in paragraph (b) of this section.

(3) Authorized user for imaging and localization studies using a radiopharmaceutical, generator, or reagent kit in Section 31(1) of this administrative regulation to be a physician who:

(a) Is certified in:

1. Nuclear medicine by the American Board of Nuclear Medicine;

2. Diagnostic radiology by the American Board of Radiology;

3. Diagnostic radiology or radiology by the American Osteopathic Board of Radiology;

4. Nuclear medicine by the Royal College of Physicians and Surgeons of Canada; or

5. American Osteopathic Board of Nuclear Medicine in nuclear medicine;

(b) Has had classroom and laboratory training in basic radioisotope handling techniques applicable to the use of prepared radiopharmaceuticals, generators, and reagent kits, supervised work experience, and supervised clinical experience as follows:

(c)1. 200 hours of classroom and laboratory training that includes:

a. Radiation physics and instrumentation;

b. Radiation protection;

c. Mathematics pertaining to the use and measurement of radioactivity;

d. Radiopharmaceutical chemistry; and

e. Radiation biology;

2. 500 hours of supervised work experience under the supervision of an authorized user that includes:

a. Ordering, receiving, and unpacking radioactive materials safely and performing the related radiation surveys;

b. Calibrating dose calibrators and diagnostic instruments and performing checks for proper operation of survey meters;

c. Calculating and safely preparing patient or human research subject dosages;

d. Using administrative controls to prevent the medical event of radioactive material;

e. Using procedures to contain spilled radioactive material safely and using proper decontamination procedures; and

f. Eluting technetium-99m from generator systems, measuring and testing the eluate for molybdenum-99 and alumina contamination, and processing the eluate with reagent kits to prepare technetium-99m labeled radiopharmaceuticals; and

3. 500 hours of supervised clinical experience under the supervision of an authorized user that includes:

a. Examining patients or human research subjects and reviewing their case histories to determine their suitability for radioisotope diagnosis, limitations, or contraindications;

b. Selecting the suitable radiopharmaceuticals and calculating and measuring the dosages;

c. Administering dosages to patients or human research subjects and using syringe radiation shields;

d. Collaborating with the authorized user in the interpretation of radioisotope test results; and

e. Patient or human research subject follow up; or

(c) Has successfully completed a six (6) month training program in nuclear medicine that has been approved by the Accreditation Council for Graduate Medical Education and that included classroom and laboratory training, work experience, and supervised clinical experience in all the topics identified in paragraph (b) of this section.

(4) The authorized user of radiopharmaceuticals for therapeutic use in Section 33 of this administrative regulation to be a physician who:

(a) Is certified by:

1. The American Board of Nuclear Medicine;

2. The American Board of Radiology in radiology, therapeutic radiology, or radiation oncology;

3. The Royal College of Physicians and Surgeons of Canada in nuclear medicine; or

4. The American Osteopathic Board of Radiology after 1984; or

(b) Has had classroom and laboratory training in basic radioisotope handling techniques applicable to the use of therapeutic radiopharmaceuticals, and supervised clinical experience as follows:

1. Eighty (80) hours of classroom and laboratory training that includes:

a. Radiation physics and instrumentation;

b. Radiation protection;

c. Mathematics pertaining to the use and measurement of radioactivity; and

d. Radiation biology; and

2. Supervised clinical experience under the supervision of an authorized user at a medical institution that includes:

a. Use of iodine-131 for diagnosis of thyroid function and the treatment of hyperthyroidism or cardiac dysfunction in ten (10) individuals; and

b. Use of iodine-131 for treatment of thyroid carcinoma in three (3) individuals.

(5) The authorized user of only iodine-131 for the treatment of hyperthyroidism to be a physician with special experience in thyroid disease who has had classroom and laboratory training in basic radioisotope handling techniques applicable to the use of iodine-131 for treating hyperthyroidism, and supervised clinical experience as follows:

(a) Eighty (80) hours of classroom and laboratory training that includes:

1. Radiation physics and instrumentation;

2. Radiation protection;

3. Mathematics pertaining to the use and measurement of radioactivity; and

4. Radiation biology; and

(b) Supervised clinical experience under the supervision of an authorized user that includes the use of iodine-131 for diagnosis of thyroid function, and the treatment of hyperthyroidism in ten (10) individuals.

(6) The authorized user of only iodine-131 for the treatment of thyroid carcinoma to be a physician with special experience in thyroid disease who has had classroom and laboratory training in basic radioisotope handling techniques applicable to the use of iodine-131 for treating thyroid carcinoma, and supervised clinical experience as follows:

(a) Eighty (80) hours of classroom and laboratory training that includes:

1. Radiation physics and instrumentation;

2. Radiation protection;

3. Mathematics pertaining to the use and measurement of radioactivity; and

4. Radiation biology; and

(b) Supervised clinical experience under the supervision of an authorized user that includes the use of iodine-131 for the treatment of thyroid carcinoma in three (3) individuals.

(7) The authorized user of a brachytherapy source in Section 36 of this administrative regulation for therapy to be a physician who:

(a) Is certified in:

1. Radiology, therapeutic radiology, or radiation oncology by the American Board of Radiology;

2. Radiation oncology by the American Osteopathic Board of Radiology;

3. Radiology, with specialization in radiotherapy, as a British "Fellow of the Faculty of Radiology" or "Fellow of the Royal College of Radiology"; or

4. Therapeutic radiology by the Canadian Royal College of Physicians and Surgeons; or

(b) Is in the active practice of therapeutic radiology, has had classroom and laboratory training in radioisotope handling techniques applicable to the therapeutic use of brachytherapy sources, supervised work experience, and supervised clinical experience as follows:

1. 200 hours of classroom and laboratory training that includes:

a. Radiation physics and instrumentation;

b. Radiation protection;

c. Mathematics pertaining to the use and measurement of radioactivity; and

d. Radiation biology;

2. 500 hours of supervised work experience under the supervision of an authorized user at a medical institution that includes:

a. Ordering, receiving, and unpacking radioactive materials safely and performing the related radiation surveys;

b. Checking survey meters for proper operation;

c. Preparing, implanting, and removing sealed sources;

d. Maintaining running inventories of material on hand;

e. Using administrative controls to prevent a medical event involving radioactive material; and

f. Using emergency procedures to control radioactive material; and

3. Three (3) years of supervised clinical experience that includes one (1) year in a formal training program approved by the Residency Review Committee for Radiology of the Accreditation Council for Graduate Medical Education or the Committee on Postdoctoral Training of the American Osteopathic Association, and an additional two (2) years of clinical experience in therapeutic radiology under the supervision of an authorized user at a medical institution that includes:

a. Examining individuals and reviewing their case histories to determine their suitability for brachytherapy treatment, and any limitations or contraindications;

b. Selecting the proper brachytherapy sources and dose and method of administration;

c. Calculating the dose; and

d. Post-administration follow-up and review of case histories in collaboration with the authorized user.

(8) The authorized user of only strontium-90 for ophthalmic radiotherapy to be a physician who is in the active practice of therapeutic radiology or ophthalmology, and has had classroom and laboratory training in basic radioisotope handling techniques applicable to the use of strontium-90 for ophthalmic radiotherapy, and a period of supervised clinical training in ophthalmic radiotherapy as follows:

(a) Twenty-four (24) hours of classroom and laboratory training that includes:

1. Radiation physics and instrumentation;

2. Radiation protection;

3. Mathematics pertaining to the use and measurement of radioactivity; and

4. Radiation biology; and

(b) Supervised clinical training in ophthalmic radiotherapy under the supervision of an authorized user at a medical institution that includes the use of strontium-90 for the ophthalmic treatment of five ***(5)*** individuals that includes:

1. Examination of each individual to be treated;

2. Calculation of the dose to be administered;

3. Administration of the dose; and

4. Follow up and review of each individual's case history.

(9) The authorized user of a sealed source for diagnosis in a device listed in Section 45 of this administrative regulation to be a physician, dentist, or podiatrist who:

(a) Is certified in:

1. Radiology, diagnostic radiology, therapeutic radiology, or radiation oncology by the American Board of Radiology;

2. Nuclear medicine by the American Board of Nuclear Medicine;

3. Diagnostic radiology or radiology by the American Osteopathic Board of Radiology; or

4. Nuclear medicine by the Royal College of Physicians and Surgeons of Canada; or

(b) Has had eight (8) hours of classroom and laboratory training in basic radioisotope handling techniques specifically applicable to the use of the device that includes:

1. Radiation physics, mathematics pertaining to the use and measurement of radioactivity, and instrumentation;

2. Radiation biology;

3. Radiation protection; and

4. Training in the use of the device for the uses requested.

(10) The authorized user of a sealed source for therapeutic medical devices listed in Section 46 of this administrative regulation to be a physician who:

(a) Is certified in:

1. Radiology, therapeutic radiology, or radiation oncology by the American Board of Radiology;

2. Radiation oncology by the American Osteopathic Board of Radiology;

3. Radiology, with specialization in radiotherapy, as a British "Fellow of the Faculty of Radiology" or "Fellow of the Royal College of Radiology";

4. Therapeutic radiology by the Canadian Royal College of Physicians and Surgeons; or

(b) Is in the active practice of therapeutic radiology, and has had classroom and laboratory training in basic radioisotope techniques applicable to the use of a sealed source in a therapeutic medical device, supervised work experience, and supervised clinical experience as follows:

1. 200 hours of classroom and laboratory training that includes:

a. Radiation physics and instrumentation;

b. Radiation protection;

c. Mathematics pertaining to the use and measurement of radioactivity; and

d. Radiation biology;

2. 500 hours of supervised work experience under the supervision of an authorized user at a medical institution that includes:

a. Review of the full calibration measurements and periodic

spot-checks;

b. Preparing treatment plans and calculating treatment times;

c. Using administrative controls to prevent medical events;

d. Implementing emergency procedures to be followed in the event of the abnormal operation of the medical device or console; and

e. Checking and using survey meters; and

3. Three (3) years of supervised clinical experience that includes one (1) year in a formal training program approved by the Residency Review Committee for Radiology of the Accreditation Council for Graduate Medical Education or the Committee on Postdoctoral Training of the American Osteopathic Association and an additional two (2) years of clinical experience in therapeutic radiology under the supervision of an authorized user at a medical institution that includes:

a. Examining individuals and reviewing their case histories to determine their suitability for teletherapy, remote afterloader, or gamma stereotactic radiosurgery treatment, and any limitations or contraindications;

b. Selecting the proper dose and how it is to be administered;

c. Calculating the doses and collaborating with the authorized user in the review of patients' or human research subjects' progress and consideration of the need to modify originally prescribed doses as warranted by patients' or human research subjects' reaction to radiation; and

d. Postadministration follow up and review of case histories.

(11) The authorized medical physicist shall be an individual who:

(a) Is certified by the American Board of Radiology in:

1. Therapeutic radiological physics;

2. Roentgen ray and gamma ray physics;

3. X-ray and radium physics; or

4. Radiological physics; or

(b) Is certified by the American Board of Medical Physics in radiation oncology physics; or

(c) Holds a master's or doctor's degree in physics, biophysics, radiological physics, or health physics, and has completed one (1) year of full time training in therapeutic radiological physics and an additional year of full time work experience under the supervision of a medical physicist at a medical institution that includes the tasks listed in Sections 24, 52, 53, 54, 55, 56, 57 and 58 of this administrative regulation as applicable.

(12) The authorized nuclear pharmacist to be a pharmacist who:

(a) Has current board certification as a nuclear pharmacist by the Board of Pharmaceutical Specialties; or

(b)1. Has completed 700 hours in a structured educational program consisting of both:

a. Didactic training in the following areas:

(i) Radiation physics and instrumentation;

(ii) Radiation protection;

(iii) Mathematics pertaining to the use and measurement of radioactivity;

(iv) Chemistry of radioactive material for medical use; and

(v) Radiation biology; and

b. Supervised experience in a nuclear pharmacy involving the following:

(i) Shipping, receiving, and performing related radiation surveys;

(ii) Using and performing checks for proper operation of dose calibrators, survey meters, and, if appropriate, instruments used to measure alpha- or beta-emitting radionuclides;

(iii) Calculating, assaying, and safely preparing dosages for patients or human research subjects;

(iv) Using administrative controls to avoid mistakes in the administration of radioactive material;

(v) Using procedures to prevent or minimize contamination and using proper decontamination procedures; and

2. Has obtained written certification, signed by a preceptor authorized nuclear pharmacist, that the above training has been satisfactorily completed and that the individual has achieved a level of competency sufficient to independently operate a nuclear pharmacy.

(13) An authorized experienced nuclear pharmacist must be a pharmacist who has completed a structured educational program as specified in subsection (12)(b)(1) of this section before December 2, 1994, and who is working in a nuclear pharmacy would qualify as an experienced nuclear pharmacist. An experienced nuclear pharmacist shall not be required to comply with the requirements for a preceptor statement (subsection (12)(b)(2) of this section) and recentness of training (Section 63 of this administrative regulation) to qualify as an authorized nuclear pharmacist.

Section 79. Food and Drug Administration (FDA), Other Federal and State Requirements. Nothing in this administrative regulation relieves the ***licensee[~~license~~]*** from complying with applicable FDA, other federal and state requirements governing radioactive drugs or devices.

STEPHANIE MAYFIELD GIBSON, MD, FCAP, Commissioner
AUDREY TAYSE HAYNES, Secretary

APPROVED BY AGENCY: September 11, 2014

FILED WITH LRC: September 15, 2014 at 11 a.m.

CONTACT PERSON: Tricia Orme, Office of Legal Services, 275 East Main Street 5 W-B, Frankfort, Kentucky 40601, phone 502-564-7905, fax 502-564-7573, tricia.orme@ky.gov.

CABINET FOR HEALTH AND FAMILY SERVICES
Department for Public Health
Division of Public Health Protection and Safety
(As Amended at ARRS, December 9, 2014)

902 KAR 100:100. Industrial radiography.

RELATES TO: KRS 211.842-211.852, 211.990(4), 10 C.F.R. 34, 71, 21 C.F.R. 1020.40

STATUTORY AUTHORITY: KRS 194A.050(1), 211.090(3), 211.844

NECESSITY, FUNCTION, AND CONFORMITY: KRS 211.844 requires the Cabinet for Health and Family Services to ***promulgate[~~provide by~~]*** administrative ***regulations[~~regulation~~]*** for the registration and licensing of the possession or use of sources of ionizing or electronic product radiation and the handling and disposal of radioactive waste. This administrative regulation establishes radiation safety requirements for industrial radiographic operations and shall apply to licensees or registrants who use sources of radiation for industrial radiography.

Section 1. Specific License and Registration Requirements for Industrial Radiography. (1) An Application for Radioactive Material License, incorporated by reference in 902 KAR 100:040, for a specific license or registration for the use of sources of radiation in industrial radiography shall be approved if the applicant meets the following requirements:

(a) Except as provided in subsection (3)(k) of this section, the applicant shall satisfy the general requirements specified in 902 KAR 100:040, Section 4, or 100:110 and 100:145, and any specific requirements contained in this administrative regulation.

(b) The applicant shall submit an adequate program for training a radiographer and a radiographers' assistant that meets the requirements of Section 14 of this administrative regulation.

1. ***[~~After June 30, 2002,~~]***An applicant shall not describe the initial training and examination program for a radiographer in the subjects outlined in Section 14 of this administrative regulation.

2. From June 30, 2000, to June 30, 2002, an applicant shall affirm that an individual acting as an industrial radiographer shall be certified in radiation safety by a certifying entity as described in 10 C.F.R. Part 34, Appendix A, before commencing duty as a radiographer. This affirmation shall substitute for a description of the initial training and examination program for a radiographer in the subjects outlined in Section 14 of this administrative regulation.

(c) The applicant shall submit procedures for verifying and documenting the certification status of a radiographer and for ensuring that the certification of an individual acting as a

radiographer remains valid.

(d) The applicant shall submit written operating and emergency procedures as described in Section 15 of this administrative regulation.

(e) The applicant shall submit a description of a program for inspections of the job performance of a radiographer and a radiographers' assistant at intervals not to exceed six (6) months as described in Section 14 of this administrative regulation.

(f) The applicant shall submit a description of the applicant's overall organization structure as it applies to the radiation safety responsibilities in industrial radiography, including specified delegation of authority and responsibility.

(g) The applicant shall identify and list the qualifications of the individual designated as the radiation safety officer (RSO) and of the potential designees responsible for ensuring that the licensee's radiation safety program is implemented in accordance with ***the procedures that have been submitted to the cabinet and have received approval pursuant to Sections 13 and 15 of this administrative regulation[~~approved procedures~~]***.

(h) If an applicant intends to perform leak testing of sealed sources or exposure devices containing depleted uranium (DU) shielding, the applicant shall describe the procedures for performing and the qualifications of the person authorized to do the leak testing.

(i) If the applicant intends to analyze the applicant's own wipe samples, the application shall include a description of the procedures to be followed, which shall include:

1. Instruments to be used;

2. Methods of performing the analysis; and

3. Pertinent experience of the person analyzing the wipe samples.

(j) If the applicant intends to perform an "in-house" calibration of a survey instrument, the applicant shall describe the method to be used and the relevant experience of the person performing the calibration. A calibration shall be performed according to the procedures and at the intervals prescribed in Section 5 of this administrative regulation.

(k) The applicant shall identify and describe the location of each field station and permanent radiographic installation.

(l) The applicant shall identify the location where records required by this and other administrative regulations in 902 KAR Chapter 100 shall be maintained.

(2) A licensee shall maintain a copy of its license, documents incorporated by reference, and amendments to these items until superseded by new documents approved by the cabinet or until the cabinet terminates the license.

Section 2. Performance Provisions for Radiography Equipment. Equipment used in industrial radiographic operations shall meet the following criteria:

(1)(a) Except as provided in subsection (3)(k) of this section, a radiographic exposure device, source assembly, or sealed source and associated equipment shall meet the provisions specified in American National Standard Institute (ANSI) N432-1980, Radiological Safety for the Design and Construction of Apparatus for Gamma Radiography; and

(b) Engineering analysis shall be submitted by an applicant or licensee to demonstrate the applicability of previously performed testing on similar individual radiography equipment components. If upon review, the cabinet determines that the engineering analysis demonstrates that actual testing of the component is not necessary, the engineering analysis shall be an acceptable alternative.

(2)(a) A radiographic exposure device shall have attached to it by the user, a durable, legible, clearly visible label bearing the:

1. Chemical symbol and mass number of the radionuclide in the device;

2. Activity and date on which this activity was last measured;

3. Model or product code and serial number of the sealed source;

4. Manufacturer of the sealed source; and

5. Name, address, and telephone number of the licensee or registrant.

(b) A radiographic exposure device intended for use as a Type B transport container shall meet the applicable provisions of 10 C.F.R. 71.

(c) Modification of an exposure device, source changer, source assembly, or associated equipment shall be prohibited, unless the design of a replacement component, including source holder, source assembly, control, or guide tube, shall not compromise the design safety features of the system.

(3) In addition to the provisions specified in subsections (1) and (2) of this section, the following provisions shall apply to a radiographic exposure device, source assembly, and associated equipment that allow the source to be moved out of the device for radiographic operation or to a source changer:

(a) The coupling between the source assembly and the control cable shall be designed in a manner so that the source assembly cannot:

1. Become disconnected if cranked outside the guide tube; and

2. Be unintentionally disconnected under normal and reasonably foreseeable abnormal conditions.

(b) The device shall automatically secure the source assembly if it is cranked back into the fully shielded position within the device. The securing system shall be released only by a deliberate operation on the exposure device.

(c) Each outlet fitting, lock box, and drive cable fitting on a radiographic exposure device shall be equipped with a safety plug or cover, which shall be installed during storage and transportation to protect the source assembly from water, mud, sand, or other foreign matter.

(d) A sealed source or source assembly shall have attached to it or engraved on it, a durable, legible, visible label with the words: "DANGER-RADIOACTIVE." The label shall not interfere with the safe operation of the exposure device or associated equipment.

(e) The guide tube shall have passed:

1. A crushing test that closely approximates the crushing forces likely to be encountered during use; and

2. A kinking resistance test that closely approximates the kinking forces likely to be encountered during use.

(f) Guide tubes shall be used if moving the source out of the device.

(g) An exposure head or similar device designed to prevent the source assembly from passing out the end of the guide tube shall be attached to the outermost end of the guide tube during a radiographic operation.

(h) The guide tube exposure head connection shall withstand the tensile test for control units specified in ANSI N432-1980.

(i) A source changer shall provide a system for assuring that the source cannot be accidentally withdrawn from the changer if connecting or disconnecting the drive cable to or from a source assembly.

(j) A radiographic exposure device and associated equipment in use after January 10, 1996, shall comply with the provisions of this section.

(k) Equipment used in industrial radiography operations need not comply with paragraph 8.9.2(c) of the Endurance Test in American National Standards Institute N432-1980, if the prototype equipment has been tested using a torque value representative of the torque that an individual using the radiographic equipment can realistically exert on the lever or crankshaft of the drive mechanism.

Section 3. Limits on External Levels of Radiation for Radiographic Exposure Devices and Storage Containers. The maximum exposure rate limits for storage containers and source changers shall be:

(1) 200 millirems (2 millisieverts) per hour at any exterior surface; and

(2) Ten (10) millirems (0.1 millisieverts) per hour at one (1) meter from any exterior surface, with the sealed source in the shielded position.

Section 4. Locking of Radiographic Exposure Devices, Storage Containers, and Source Containers. (1) A radiographic exposure device shall have a lock or outer locked container designed to

prevent unauthorized or accidental production of radiation or removal or exposure of a sealed source from its shielded position.

(a) An exposure device or its container shall be kept locked, and if a keyed lock, with the key removed at all times except:

1. If under the direct surveillance of a radiographer or radiographer's assistant; or

2. As authorized by Section 19 of this administrative regulation.

(b) During radiographic operation the sealed source assembly shall be secured in the shielded position each time the source is returned to that position.

(c) A sealed source storage container and source changer shall be:

1. Provided with a lock or outer locked container designed to prevent unauthorized or accidental removal of the sealed source from its shielded position; and

2. Kept locked, and if a keyed lock, with the key removed at all times if containing sealed sources, except if under the direct surveillance of a radiographer or radiographer's assistant.

(2) The control panel of a radiation machine shall be:

(a) Equipped with a lock that prevents the unauthorized use of an x-ray system or the accidental production of radiation; and

(b) Kept locked and the key removed at all times, except if under the direct visual surveillance of a radiographer or radiographer's assistant.

Section 5. Radiation Survey Instruments. (1) A licensee or registrant shall maintain sufficient calibrated and operable radiation survey instruments at a location where a source of radiation is present in order to perform radiation surveys as required by this administrative regulation and 902 KAR 100:019, Section 12(1).

(2) A radiation survey instrument shall be calibrated:

(a) At intervals not to exceed six (6) months;

(b) After an instrument servicing, except for battery changes;

(c)1. At two (2) points located approximately one-third (1/3) and two-thirds (2/3) of full-scale for linear scale instruments;

2. Midrange of each decade, and at two (2) points of at least one (1) decade for logarithmic scale instruments;

3. At three (3) points between two (2) and 1,000 millirems (90.02 and ten (10) millisieverts) per hour for digital instruments; and

(d) So that an accuracy within plus or minus twenty (20) percent of the calibration source can be demonstrated at the points checked.

(3) A record of each calibration shall be maintained for three (3) years after the calibration date for inspection by the cabinet.

(4) Instrumentation required by this section shall have a range so that two (2) millirems (0.02 millisieverts) per hour through one (1) rem (0.01 sievert) per hour may be measured.

Section 6. Leak Testing and Replacement of Sealed Sources. (1) The replacement of a sealed source fastened to or contained in a radiographic exposure device, and leak testing, repairing, opening, or modification of a sealed source shall be performed by a person specifically authorized by the cabinet, the U.S. Nuclear Regulatory Commission, or an agreement state.

(2) A sealed source shall be tested for leakage:

(a) At intervals not to exceed six (6) months;

(b) Using a method approved by the cabinet, the U.S. Nuclear Regulatory Commission, or an agreement state; and

(c)1. By taking a wipe sample from the nearest accessible point to the sealed source where contamination might accumulate.

2. The wipe sample shall be analyzed for radioactive contamination.

3. The analysis shall be capable of detecting the presence of 0.005 microcuries (185 Bq) of radioactive material on the test sample; and

4. The analysis shall be performed by a person specifically authorized by the cabinet, the U.S. Nuclear Regulatory Commission, or an agreement state to perform the analysis.

(3) A sealed source shall not be used by the licensee until tested for leakage, except if:

(a) The source is accompanied by a certificate from the transferor showing it to have been leak-tested within six (6) months preceding the transfer; or

(b) The source has been in storage and not in use for six (6) months or less.

(4)(a) A test conducted in accordance with subsections (1) and (2) of this section that reveals the presence of 0.005 microcuries (185 Bq) or more of removable radioactive material shall be considered evidence that the sealed source is leaking.

(b) The licensee shall immediately withdraw the equipment involved from use and shall have it decontaminated and repaired or disposed of in accordance with 902 KAR 100:021.

(c) The licensee shall file a report with the Manager, Radiation Health Branch, Department of Public Health, 275 East Main Street, Frankfort, Kentucky 40621, within five (5) days of a test with results that exceed the threshold in this subsection.

(d) The report shall describe the equipment involved, the test results, and the corrective action taken.

(5) An exposure device using depleted uranium (DU) shielding and an "S" tube configuration shall be tested for DU contamination at intervals not to exceed twelve (12) months.

(a) The analysis shall be:

1. Capable of detecting the presence of 0.005 microcuries (185 Bq) of radioactive material on the test sample; and

2. Performed by a person specifically authorized by the cabinet, the U.S. Nuclear Regulatory Commission, or an agreement state to perform the analysis.

(b) If testing reveals the presence of 0.005 microcuries (185 Bq) or more of removable DU contamination, the exposure device shall be removed from use until an evaluation of the wear on the S-tube has been made.

(c) If the evaluation reveals that the S-tube is worn through, the device shall not be used again.

(d) A DU shielded device shall:

1. Not require testing for DU contamination while in storage and not in use; and

2. Require testing before use or transfer if the interval of storage exceeded twelve (12) months.

(6)(a) A licensee shall maintain records of leak test results for each sealed source or device containing DU.

(b) The results shall be stated in units of microcuries (becquerels).

(c) The licensee shall retain a record for three (3) years after it is made or until the source in storage is removed.

Section 7. Quarterly Inventory. (1) A licensee or registrant shall conduct a quarterly physical inventory to account for each source of radiation and each device containing depleted uranium received or possessed in accordance with the license.

(2) Records of the inventories shall be maintained for three (3) years from the date of the inventory for inspection by the cabinet. The records of inventories shall include:

(a) Radionuclide;

(b) Number of curies (becquerels) or mass (for DU) in a device;

(c) Location of sealed sources and devices;

(d) Date of the inventory;

(e) Name of the individual making the inventory; and

(f) Manufacturer, model number, and serial number of each sealed source or device, as appropriate.

Section 8. Utilization Logs. A licensee or registrant shall maintain utilization logs, which shall be kept available for inspection by the cabinet for three (3) years from the date of the recorded event, at the address specified in the license or on the registration, showing for a source of radiation the following information:

(1) A description including make, model, and serial number of the exposure device, radiation machine, or transport or storage container in which a sealed source is located;

(2) Identity and signature of the radiographer to whom assigned;

(3) Site or plant where used and dates of use;

(4) Date a source of radiation is removed from storage and returned to storage; and

(5) For permanent radiographic installations, the dates a

radiation machine is energized.

Section 9. Inspection and Maintenance of Radiographic Exposure Devices, Radiation Machines, Transport and Storage Containers, Associated Equipment, Source Changes, and Survey Instruments. (1) A licensee or registrant shall perform:

(a) Visual and operability checks on survey meters, radiographic exposure devices, radiation machines, transport and storage containers, associated equipment, and source changers before use on a day the equipment is to be used to ensure that the:

1. Equipment is in good working condition;

2. Source is adequately shielded; and

3. Required labeling is present; and

(b) An operability check of survey instruments using check sources or other appropriate means.

(2) If an equipment problem is found, the equipment shall be removed from service until repaired.

(3) A licensee or registrant shall have written procedures for:

(a) Inspection and routine maintenance of radiographic exposure devices, radiation machines, source changers, associated equipment, transport and storage containers, and survey instruments at intervals not to exceed three (3) months, or before the first use in order to ensure the proper functioning of components important to safety;

(b) Inspection and maintenance necessary to maintain the Type B packaging used to transport radioactive materials; and

(c) Inspection and maintenance program to assure that a Type B package is shipped and maintained in accordance with the certificate of compliance, or other approval.

(4) A replacement component shall meet design specifications.

(5) If an equipment problem is found, the equipment shall be removed from service until repaired.

(6)(a) A record of equipment problems found in daily checks and quarterly inspections of radiographic exposure devices, transport and storage containers, associated equipment, source changers, and survey instruments and of any maintenance performed in accordance with subsections (1) through (3) of this section shall be kept for three (3) years for inspection by the cabinet.

(b) The record shall include:

1. The date of check or inspection;

2. Name of the inspector;

3. Equipment involved;

4. Problems found; and

5. What repair and maintenance was done.

Section 10. Permanent Radiographic Installations. (1) Permanent radiographic installations with an entrance used for personnel access to a high radiation area shall have:

(a) Entrance controls of the type described in 902 KAR 100:019, Section 14(1)(b) and (c) and Section 14(2) that reduce the radiation level upon entry into the area; or:

(b) Both visible and audible warning signals to warn of the presence of radiation.

1. The visible signal shall be activated by radiation if the source is exposed or the machine is energized.

2. The audible signal shall be activated if an attempt is made to enter the installation while the source is exposed or the machine is energized.

(2)(a) The alarm system shall be tested for proper operation with a radiation source at the beginning of each day before the installation is used for radiographic operations.

(b) The test shall include a check of the visible and audible signals.

(c) Each entrance control device that reduces the radiation level upon entry, as designated in subsection (1) of this section, shall be tested monthly.

(3)(a) If an entrance device or alarm system is operating improperly, it shall be immediately labeled as defective and repaired within seven (7) calendar days.

(b) The facility may continue to be used during the seven (7) day repair period if the licensee:

1. Implements the continuous surveillance requirements of Section 19 of this administrative regulation; and

2. Uses an alarming ratemeter.

(4) Records of tests for entrance control and audible and visual alarms shall be maintained for inspection by the cabinet for three (3) years from the date of the test.

Section 11. Labeling, Storage, and Transportation. (1) A licensee shall not use a source changer or a container to store radioactive material unless the source changer or the storage container has securely attached to it a durable, legible, and clearly visible label bearing the standard trefoil radiation caution symbol conventional colors (magenta, purple or black on a yellow background, having a minimum diameter of twenty-five (25) millimeters), and the following words:

(a)1. CAUTION*; or

2. DANGER;

(b) RADIOACTIVE MATERIAL; and

(c) NOTIFY:

1. CIVIL AUTHORITIES; or

2. NAME OF COMPANY.

(2) The licensee shall not transport radioactive material unless the material is packaged, and the package is labeled, marked, and accompanied with appropriate shipping papers in accordance with 10 C.F.R. Part 71.

(3) A locked radiographic exposure device, radiation machine, or storage container shall be physically secured to prevent tampering or removal by unauthorized personnel. The licensee shall store radioactive material in a manner that minimizes danger from explosion or fire.

(4) The licensee shall lock and physically secure the transport package containing radioactive material in the transporting vehicle to prevent accidental loss, tampering, or unauthorized removal of the radioactive material from the vehicle.

Section 12. Conducting Industrial Radiographic Operations. (1)(a) If radiography is performed at a location other than a permanent radiographic installation, the radiographer shall be accompanied by at least one (1) other qualified radiographer or an individual who has met the requirements of Section 14 of this administrative regulation. The additional qualified individual shall observe the operations and be capable of providing immediate assistance to prevent unauthorized entry.

(b) Radiography shall not be performed unless more than one (1) qualified individual is present.

(2) A radiographic operation conducted at a location of use authorized on the license shall be conducted in a permanent radiographic installation, unless specifically authorized by the cabinet.

(3) A licensee shall have one (1) year from the effective date of June 27, 1998 to meet the requirement for having two (2) qualified individuals present at a location other than a permanent radiographic installation, as specified in subsection (1) of this section.

Section 13. Radiation Safety Officer for Industrial Radiography. The radiation safety officer (RSO) shall ensure that radiation safety is being performed in the daily operation of the licensee's program in accordance with approved procedures and regulatory requirements. (1) The minimum qualifications, training, and experience for RSOs for industrial radiography is as follows:

(a) Completion of the training and testing requirements of Section 14 of this administrative regulation;

(b) 2,000 hours of hands-on experience as a qualified radiographer in industrial radiographic operations; and

(c) Formal training in the establishment and maintenance of a radiation protection program.

(2) The cabinet shall consider alternatives if the RSO has:

(a) Appropriate training or experience in the field of ionizing radiation; and

(b) Adequate formal training in establishing and maintaining a radiation safety protection program.

(3) The specific duties and authorities of the RSO shall include:

(a) Establishing and overseeing operating, emergency and

ALARA procedures as required by 902 KAR 100:019, and reviewing them regularly to ensure that the procedures in use conform to current 902 KAR 100:019 procedures, and conform to other requirements in 902 KAR Chapter 100 and to the license conditions.

(b) Overseeing and approving all phases of the training program for radiographic personnel, ensuring that appropriate and effective radiation protection is taught;

(c) Ensuring that:

1. Required radiation surveys and leak tests are performed and documented in accordance with 902 KAR Chapter 100, including corrective measures if levels of radiation exceed established limits;

2. Personnel monitoring devices are calibrated and used properly by occupationally-exposed personnel;

3. Records are kept of the monitoring results;

4. Timely notifications are made as required by 902 KAR 100:019, Section 40; and

5. Operations are conducted safely; and

(d) Assuming control for instituting corrective actions including stopping of operations, if necessary.

(4) A licensee or registrant shall have two (2) years from the effective date of June 27, 1999 to meet the requirements of subsections (1) and (2) of this section.

Section 14. Training. (1) A licensee or registrant:

(a) Shall not permit an individual to act as a radiographer as defined in 902 KAR 100:010 until the individual has received:

1. Formal training in the subjects identified in subsection (4) of this section;

2. At least two (2) months of on-the-job training; and

3. Is certified through a radiographer certification program in accordance with the criteria specified in Section 1 of this administrative regulation; or

(b) May, until two (2) years from the effective date of June 27, 1999, allow an individual who has not met the requirements of this section, to act as a radiographer if the individual has:

1. Received training in the subjects identified in subsection (4) of this section; and

2. Demonstrated an understanding of the subjects by successful completion of a written examination previously submitted to and approved by the cabinet;

(c) Shall not permit an individual to act as a radiographer until the individual has:

1. Received copies of and instructions in the following:

a. Provisions contained in this administrative regulation;

b. Provisions of 902 KAR 100:019, 100:040, 100:070, and 100:165;

c. Conditions of the license or registration certificate issued by the cabinet; and

d. The licensee's or registrant's approved operating and emergency procedures;

2. Demonstrated understanding of the licensee's license and operating and emergency procedures by successful completion of a written or oral examination covering this material;

3. Received training in the:

a. Use of the licensee's sources of radiation, the registrant's radiation machine, and other radiation exposure devices;

b. Daily inspection of devices and associated equipment; and

c. Use of radiation survey instruments; and

4. Demonstrated an understanding of the use of radiographic exposure devices, sources, survey instruments, and associated equipment described in paragraphs (a) and (c) of this subsection, by successful completion of a practical examination covering the material;

(d) Shall not permit an individual to act as a radiographer's assistant as defined in 902 KAR 100:010 until the individual has:

1. Received copies of and instructions in the following:

a. Provisions contained in this administrative regulation;

b. Requirements of 902 KAR 100:019, 100:040, 100:070, and 100:165;

c. Conditions of the license or registration certificate issued by the cabinet; and

d. The licensee's or registrant's operating and emergency procedures;

2. Demonstrated competence to use, under the personal supervision of the radiographer, the sources of radiation, radiographic exposure devices, radiation machines, associated equipment, and radiation survey instruments that the assistant uses; and

3. Demonstrated:

a. Understanding of the instructions provided in paragraph (a) of this subsection by successfully completing a written test on the subjects covered; and

b. Competence in the use of hardware described in paragraph (b) of this subsection by successfully completing a practical examination on the use of the hardware; and

(e) Shall provide annual refresher safety training for a radiographer and radiographer's assistant at intervals not to exceed twelve (12) months.

(2)(a) Except in those operations in which a single individual shall serve as both radiographer and RSO and shall perform all radiography operations, the RSO or designee shall conduct an inspection program of the job performance of a radiographer and radiographer's assistant to ensure that 902 KAR Chapter 100, license requirements, and the applicant's operating and emergency procedures are followed.

(b) The inspection program shall include observation of the performance of the radiographer and radiographer's assistant during an actual industrial radiographic operation, at intervals not to exceed six (6) months;

(c) If a radiographer or a radiographer's assistant has not participated in an industrial radiographic operation for more than six (6) months since the last inspection, the radiographer shall demonstrate knowledge of the training requirements of subsection (3) of this section and the radiographer's assistant shall demonstrate knowledge of the training requirements of subsection (1)(d)2 of this section by a practical examination before either person may next participate in a radiographic operation; and

(d) The cabinet shall consider alternatives in those situations in which the individual serves as both radiographer and RSO.

(3) Records of training specified in subsection (1)(c) of this section shall be maintained by a licensee or registrant for inspection by the cabinet for three (3) years after the record is made.

(a) Records shall include:

1. Radiographer certification documents;

2. Verification of certification status;

3. Copies ***of***~~[or]~~ written tests;

4. Dates of oral tests and practical examinations;

5. Names of individuals conducting and receiving the oral and practical examinations; and

6. Documentation of annual refresher safety training and semi-annual inspections of job performance for a radiographer and a radiographer's assistant, which shall include:

a. Topics discussed during the refresher safety training;

b Dates the annual refresher safety training was conducted; and

c. Names of the instructors and attendees.

(b) For inspections of job performance, the records shall also include a list showing the items checked and all noncompliances observed by the RSO.

(4) The licensee or registrant shall include the following subjects required in subsection (1)(b) of this section:

(a) Fundamentals of radiation safety including:

1. Characteristics of gamma radiation;

2. Units of radiation dose and quantity of radioactivity;

3. Hazards of exposure to radiation;

4. Levels of radiation from radioactive material; and

5. Methods of controlling radiation dose by time, distance, and shielding;

(b) Radiation detection instruments including:

1. Use, operation, calibration, and limitations of radiation survey instruments;

2. Survey techniques; and

3. Use of personnel monitoring equipment;

(c) Equipment to be used including:

1. Operation and control of radiographic exposure equipment, remote handling equipment, and storage containers, including pictures or models of source assemblies (pigtails);

2. Storage, control, and disposal of radioactive material;

3. Inspection and maintenance of equipment; and

4. Operation and control of radiation machines;

(d) The requirements of 902 KAR Chapter 100, as applicable; and

(e) Case histories of accidents in radiography.

(5) A licensee or registrant shall have one (1) year from June 27, 1998 to comply with the additional training requirements specified in subsections (1)(c) and (d) of this section.

(6) Licensees and registrants shall have one (1) year from June 27, 1999, to comply with the certification requirements specified in subsection (1) of this section. Records of radiographer certification maintained in accordance with subsection (3) of this section shall provide appropriate affirmation of certification requirements specified in subsection (1) of this section.

Section 15. Operating and Emergency Procedures. (1) A licensee's or registrant's operating and emergency procedures shall include instructions in at least the following:

(a) The handling and use of sources of radiation to be employed so an individual is not likely to be exposed to radiation doses in excess of the limits established in 902 KAR 100:019, Section 3;

(b) Methods and occasions for conducting radiation surveys;

(c) Methods for controlling access to radiographic areas;

(d) Methods and occasions for locking and securing a source of radiation, radiographic exposure device, or transport and storage container;

(e) Personnel monitoring and the use of personnel monitoring equipment, including steps that shall be taken immediately by radiography personnel if a pocket dosimeter is found to be off-scale or an alarm ratemeter alarms unexpectedly;

(f) Transportation of sources of radiation to field locations, including:

1. Packing of a radiographic exposure device and storage container in a vehicle;

2. Placarding of a vehicle if needed; and

3. Control of sources of radiation during transportation;

(g) Minimizing exposure of individuals if an accident occurs;

(h) The procedure for notifying proper personnel if an accident occurs;

(i) Maintenance of records; and

(j) The inspection, maintenance, and operability checks of radiographic exposure devices, radiation machines, storage containers, survey instruments, and transport containers.

(2) The licensee or registrant shall maintain copies of current operating and emergency procedures until the cabinet terminates the license.

(3) Superseded material shall be retained for three (3) years after the change is made.

Section 16. Personnel Monitoring. (1) A licensee or registrant shall not permit an individual to act as a radiographer or radiographer's assistant unless, at all times during radiographic operations, the individual wears on the trunk of the body a direct reading pocket dosimeter, an operating alarm ratemeter, and a personal dosimeter that is processed and evaluated by an accredited National Voluntary Laboratory Accreditation Program (NVLAP) processor.

(2) The wearing of an alarm ratemeter shall not be required for permanent radiography facilities in which another ***[appropriate]***alarming or warning device is in routine use or during radiographic operations using radiation machines.

(3) Pocket dosimeters shall have a range from zero to at least 200 milliroentgens (two (2) millisieverts) and shall be recharged daily or at the start of a shift. Electronic personal dosimeters may be used in place of ion-chamber pocket dosimeters only.

(4) A personal dosimeter shall be assigned to, and worn by, only one (1) individual.

(5) A film badge shall be replaced each month, and other personal dosimeters processed and evaluated by an accredited NVLAP processor shall be replaced at intervals not to exceed three (3) months.

(6) After replacement, each personal dosimeter shall be processed as soon as possible.

(7) Direct reading dosimeters, such as pocket dosimeters or electronic personal dosimeters, shall be read and exposures recorded at the beginning and end of a shift.

(a) If an individual's pocket dosimeter is found to be off scale, or if the electronic personal dosimeter reads greater than 200 millirems (two (2) millisieverts), and the possibility of radiation exposure cannot be ruled out as the cause:

1. The individual's personal dosimeter shall be sent for processing within twenty-four (24) hours;

2. Radiographic operations by the individual shall cease; and

3. The individual shall not return to work with sources of radiation until a determination of the radiation exposure has been made by the RSO or the RSO's designee. The results shall be included in the records maintained in accordance with paragraph (b) of this subsection and subsection (10)(b)[~~(9)(b)~~] of this section.

(b) A licensee or registrant shall maintain the following exposure records:

1. Direct reading dosimeter readings and yearly operability checks for three (3) years after the record is made;

2. Reports received from the NVLAP processor of personal dosimeter results until the cabinet terminates the license; and

3. Records of estimates of exposures as a result of off-scale personal direct reading dosimeters, or lost or damaged personal dosimeters, until the cabinet terminates the license.

(8) If a personal dosimeter is lost or damaged, the worker shall cease work immediately until:

(a) A replacement personal dosimeter meeting the requirements of subsection (1) of this section is provided; and

(b) The exposure is calculated for the time period from issuance to loss or damage of the personal dosimeter. The results of the calculated exposure and the time period for which the personal dosimeter was lost or damaged shall be included in the records maintained in accordance with subsection (7) of this section.

(9)(a) Pocket dosimeters, or electronic personal dosimeters, shall be checked for correct response to radiation at periods not to exceed twelve (12) months.

(b) Acceptable dosimeters shall read within plus or minus twenty (20) percent of the true radiation exposure.

(10)(a) An alarm ratemeter shall:

1. Be checked to ensure that the audible alarm functions properly prior to use at the start of a shift;

2. Be set to give an alarm signal at a preset dose rate of 500 mR/hr (5mSv/hr);

3. Require special means to change the preset alarm functions;

4. Be calibrated at periods not to exceed twelve (12) months for correct response to radiation; and

5. Alarm within plus or minus twenty (20) percent of the true radiation dose rate.

(b) Records of alarm ratemeter calibrations shall be maintained for three (3) years after the record is made.

Section 17. Documents Required at Field Stations and Temporary Job Sites. A licensee or registrant shall have the following records available for inspection by the cabinet at each field station, if applicable, and at each job site:

(1) A copy of the operating and emergency procedures;

(2) A current copy of the radioactive material license or registration certificate;

(3) A copy of 902 KAR 100:019, 100:100, and 100:165;

(4) Latest survey records required by Section 22 of this administrative regulation;

(5) Records of direct reading dosimeters, such as pocket dosimeters or electronic personal dosimeters readings, as required by Section 16 of this administrative regulation;

(6) Evidence of The latest instrument calibration of the radiation survey instrumentation in use at the site, as required by

Section 5 of this administrative regulation;

(7) Utilization records for each radiographic exposure device dispatched from that location, as required by Section 8 of this administrative regulation;

(8) Records of equipment problems identified in daily checks of equipment required by Section 9 of this administrative regulation;

(9) Records of alarm system and entrance control checks required by Section 10 of this administrative regulation, if applicable;

(10) Evidence of the latest calibrations of alarm ratemeters and operability checks of pocket dosimeters and electronic personal dosimeters, as required by Section 16 of this administrative regulation;

(11) The shipping papers for the transportation of radioactive materials required by 902 KAR 100:070; and

(12) If operating in accordance with reciprocity pursuant to 902 KAR 100:065, a copy of the agreement state or U.S. Nuclear Regulatory Commission license authorizing the use of radioactive materials.

Section 18. Specific Provisions for Radiographic Personnel Performing Industrial Radiography. (1) At a job site, the following shall be supplied by a licensee or registrant:

(a) At least one (1) operable, calibrated survey instrument for every exposure device or radiation machine in use;

(b) A current whole body personnel monitor (TLD or film badge) for an individual performing radiographic operations;

(c) An operable, calibrated pocket dosimeter with a range of zero to 200 milliroentgens for a worker performing radiographic operations;

(d) Appropriate barrier ropes and signs; and

(e) An operable, calibrated, alarming ratemeter for every person performing radiographic operations using a radiographic exposure device.

(2) A radiographer at a job site shall have on the radiographer's person a valid certificate ID card issued by a certifying entity.

(3) An industrial radiographic operation shall not be performed if the items in subsections (1) and (2) of this section are not available at the job site or they are inoperable.

(4) During an inspection by the cabinet, the cabinet shall terminate an operation if items in subsections (1) and (2) of this section are not available or not operable, or if the required number of radiographic personnel are not present. Operations shall not be resumed until required conditions are met.

Section 19. Surveillance. During a radiographic operation, a radiographer or the other individual present, as required by Section 12 of this administrative regulation, shall maintain direct visual surveillance of the operation to protect against unauthorized entry into a high radiation area, except at a permanent radiographic installation where:

(1) Entryways are locked; and

(2) The requirements of Section 10 of this administrative regulation are met.

Section 20. Posting. (1) An area in which radiography is being performed shall be conspicuously posted, as required in 902 KAR 100:019, Section 24(1) and (2).

(2) Exceptions listed in 902 KAR 100:019 do not apply to an industrial radiographic operation.

Section 21. Special Provisions and Exemptions for Cabinet X-ray Systems. (1) The use of a certified or certifiable cabinet x-ray system shall be exempt from the requirements of this administrative regulation, except for the following:

(a) For certified and certifiable cabinet x-ray systems, including those designed to allow admittance of individuals:

1. A registrant shall not permit an individual to operate a cabinet x-ray system until the individual has received a copy of and instruction in the operating procedures for the unit.

2. A test for proper operation of interlocks shall be conducted and recorded at intervals not to exceed six (6) months.

3. A registrant shall perform an evaluation of the radiation dose limits to determine compliance with 902 KAR 100:019, Section 10, and 21 C.F.R. 1020.40, Cabinet X-ray Systems, at intervals not to exceed one (1) year.

4. Records shall be maintained demonstrating compliance with subsections (1)(a)1 and 2 of this section until disposal is authorized by the cabinet.

5. Records of the evaluation required by subparagraph 3 of this paragraph shall be maintained for two (2) years after the evaluation is performed.

(b)1. Certified cabinet x-ray systems shall be maintained in compliance with 21 C.F.R. 1020.40, Cabinet X-ray Systems.

2. A modification shall not be made to the system unless prior cabinet approval has been granted.

(2) An industrial use of a hand-held light intensified imaging device shall be exempt from the requirements of this administrative regulation if the dose rate eighteen (18) inches from the source of radiation to any individual does not exceed two (2) millirem per hour. A device exceeding this limit shall meet the applicable requirements of this administrative regulation and the licensing or registration requirements of 902 KAR 100:040 and 100:110, as applicable.

Section 22. Radiation Surveys and Survey Records. (1) A radiographic operation shall not be conducted unless calibrated and operable radiation survey instrumentation, as described in Section 5 of this administrative regulation, is available and used at a location of radiographic operations.

(2) A survey with a radiation survey instrument shall be made after a radiographic exposure of the radiographic exposure device and the guide tube if approaching the device or guide tube to determine that the sealed source has been returned to its shielded position before exchanging films, repositioning the exposure head, or dismantling equipment.

(3) A survey shall be conducted of the radiographic exposure device with a calibrated radiation survey instrument if the source is exchanged and if a radiographic exposure device is placed in a storage area, to ensure that the source is in its shielded position.

(4) A physical radiation survey shall be made after a radiographic exposure using radiographic machines to determine that the machine is "off."

(5) Records shall be kept of the exposure device survey conducted before the device is placed in storage as specified in subsection (3) of this section if that survey is the last one performed in the workday. The records shall be maintained for inspection by the cabinet for three (3) years after it is made.

Section 23. Supervision of Radiographer's Assistant. (1) If a radiographer's assistant uses radiographic exposure devices, associated equipment, sealed sources, or conducts radiation surveys required by Section 22 of this administrative regulation to determine that the sealed source has returned to the shielded position after an exposure or the radiation machine is off, the radiographer's assistant shall be under the personal supervision of a radiographer.

(2) The radiographer shall:

(a) Be physically present at the site where a source of radiation and associated equipment is being used;

(b) Watch, by direct visual observation, the performance of the operations performed by the radiographer's assistant referred to in this section; and

(c) Be in close proximity so that immediate assistance shall be given if required.

Section 24. Reporting Requirements. (1) In addition to the reporting requirements specified in 902 KAR 100:040, Section 15, and in accordance with other sections of this administrative regulation, a licensee or registrant shall provide a written report to the

Cabinet for Health and Family Services, Radiation Health Branch within thirty (30) days of the occurrence of the following incidents involving radiographic equipment:

(a) Unintentional disconnection of the source assembly from

the control cable;

(b) Inability to retract the source assembly to its fully shielded position and secure it in this position;

(c) Failure of a component, critical to safe operation of the device, to properly perform its intended function;

(d) Failure of an indicator on a radiation machine to show that radiation is being produced;

(e) Failure of an exposure switch to terminate production of radiation if turned to the off position; or

(f) Failure of a safety interlock to terminate x-ray production.

(2) The licensee or registrant shall include the following information in a report submitted in accordance with subsection (1) of this section:

(a) A description of the equipment problem;

(b) Cause of an incident, if known;

(c) Manufacturer and model number of equipment involved in the incident;

(d) Place, time, and date of the incident;

(e) Actions taken to establish normal operations;

(f) Corrective actions taken or planned to prevent recurrence; and

(g) Qualifications of personnel involved in the incident.

(3) A report of an overexposure submitted under 902 KAR 100:019, Section 40, involving failure of a safety component of radiography equipment shall include the information specified in subsection (2) of this section.

(4) A licensee shall notify the cabinet if conducting radiographic operations or storing radioactive material at a location not listed on the license for a period in excess of 180 days in a calendar year.

Section 25. Incorporation by Reference. (1) The American National Standard Institute (ANSI) N432-1980, "Radiological Safety for the Design and Construction of Apparatus for Gamma Radiography", published in NBS Handbook 136, issued January 1981, is incorporated by reference.

(2) This material may be inspected, copied, or obtained, subject to applicable copyright law, at the Department for Public Health, Office of the Commissioner, 275 East Main Street, Frankfort, Kentucky 40621, Monday through Friday, 8 a.m. until 4:30 p.m.

STEPHANIE MAYFIELD GIBSON, MD, FCAP, Commissioner
AUDREY TAYSE HAYNES, Secretary

APPROVED BY AGENCY: September 11, 2014

FILED WITH LRC: September 15, 2014 at 11 a.m.

CONTACT PERSON: Tricia Orme, Office of Legal Services, 275 East Main Street 5 W-B, Frankfort, Kentucky 40601, phone 502-564-7905, fax 502-564-7573, email tricia.orme@ky.gov.

CABINET FOR HEALTH AND FAMILY SERVICES
Department for Public Health
Division of Public Health Protection and Safety
(As Amended at ARRS, December 9, 2014)

902 KAR 100:142. Wire line service operations.

RELATES TO: KRS 211.842-211.852, 211.990(4), 10 C.F.R. 39

STATUTORY AUTHORITY: KRS 194.050, 211.090, 211.844, 10 C.F.R. 39

NECESSITY, FUNCTION, AND CONFORMITY: KRS 211.844 requires the Cabinet for Health and Family Services to ***promulgate[provide by]*** administrative ***regulations[regulation]*** for the registration and licensing of the possession or use of sources of ionizing or electronic product radiation and the handling and disposal of radioactive waste. This administrative regulation provides radiation safety requirements for persons using sources of radiation for wire line service operations including radioactive markers, mineral exploration, and subsurface tracer studies.

Section 1. Agreement with Well Owner or Operator. (1) A licensee shall not perform a wire line service operation with a sealed source in a well or well-bore unless, prior to commencement of the operation, the licensee has a written agreement with the well operator or[,] well or land owner[,or drilling contractor] that:

(a) If a sealed source is lodged downhole, a reasonable effort at recovery shall be made;

(b) If a decision is made to abandon the sealed source downhole, the requirements of this administrative regulation shall be met;

(c) A person shall not attempt to recover a sealed source in a manner, which, in the licensee's opinion, may result in its rupture;

(d) The radiation monitoring required in Section 24[14] of this administrative regulation shall be performed;

(e) If the environment, equipment, or personnel are contaminated with radioactive material, decontamination shall be performed prior to release from the site or for unrestricted use; and

(f) If the sealed source is classified as not retrievable after reasonable efforts at recovery have been expended, the requirements of Section 27[23] of this administrative regulation shall be met.

(2) The licensee shall retain a copy of the written agreement with the well operator or[,] well or land owner[, or drilling contractor] for three (3) years after completion of the well logging operations.

Section 2. Limits on Levels of Radiation. Radioactive materials shall be used, stored, and transported in a manner that the requirements of 902 KAR 100:019 and 100:070 shall be met.

Section 3. Storage Precautions. (1) Sources of radiation, except accelerators, shall be provided with a lockable storage or transport container.

(2) The container shall be provided with a lock (or tamper seal for calibration sources) to prevent unauthorized removal of, or exposure to, the source of radiation.

(3) Sources of radiation shall be stored in a manner that shall minimize the danger from explosion or fire.

Section 4. Transport Precautions. Transport containers shall be physically secured to the transporting vehicle to prevent accidental loss, tampering, or unauthorized removal.

Section 5. Radiation Survey Instruments. (1) The licensee or registrant shall maintain sufficient calibrated and operable radiation survey instruments, capable of detecting beta and gamma radiation, at each field station and temporary jobsite to make physical radiation surveys as required by this administrative regulation and by 902 KAR 100:019.

(2)(a) Instrumentation required by this section shall be capable of measuring one-tenth (0.1) millirem (.001 mSv) per hour through at least fifty (50) millirem (0.5 mSv) per hour.

(b) The licensee shall have available additional calibrated and operable radiation detection instruments sensitive enough to detect the low radiation and contamination levels that could be encountered if a sealed source ruptured. The licensee shall own the instruments or have a procedure to obtain them ***as soon as possible[quickly]*** from a second party.

(3) The licensee shall have each[A] radiation survey instrument required by subsection (1) and (2) of this section[shall be] calibrated:

(a) At intervals not to exceed six (6) months and after each instrument servicing;

(b) At energies and exposure levels appropriate for use; and

(c) So that accuracy within plus or minus twenty (20) percent of the true radiation level shall be demonstrated on each scale.

(4) Records of calibration shall be maintained for a period of at least three (3)[two (2)] years after the date of calibration for inspection by the cabinet.

Section 6. Leak Testing of Sealed Sources. (1) A licensee who uses a sealed source of radioactive material shall have the source tested for leakage as specified in this section. The licensee shall keep a record of leak test results in units of microcuries and retain the record for inspection by the cabinet.

(2) Method of Testing.

(a) The wipe of a sealed source shall be performed using a leak test kit or method approved by the cabinet, U.S. Nuclear Regulatory Commission, or an agreement state;

(b) The wipe sample shall be taken from the nearest accessible point to the sealed source where contamination might accumulate;

(c) The wipe sample shall be analyzed for radioactive contamination; and

(d) The analysis shall be capable of detecting the presence of 0.005 microcuries (185 Bq) of radioactive material on the test sample and shall be performed by a person approved by the cabinet, U.S. Nuclear Regulatory Commission, or an agreement state, as established in 10 C.F.R. Part 39.35.

(3) Test Frequency.

(a) Each sealed source, except an Energy Compensation Source (ECS), shall be tested at intervals not to exceed six (6) months;

(b) In the absence of a certificate from a transferor that a test has been made within the six (6) months before the transfer, the sealed source shall not be used until tested.

(4)(a) Each ECS, not exempted by subsection (7) of this section, shall be tested at intervals not to exceed three (3) years. In the absence of a certificate from a transferor that a test has been made with the three (3) years before the transfer, the ECS shall not be used until tested.

(5) Removal from service:

(a) If the test conducted under subsections (1) and (2) of this section reveals the presence of 0.005 microcuries (185 Bq) or more of removable radioactive material, the licensee shall remove the sealed source from service immediately and have it decontaminated, repaired, or disposed by a cabinet, U.S. Nuclear Regulatory Commission, or agreement state licensee authorized to perform these functions;

(b) The licensee shall check the equipment associated with the leaking source for radioactive contamination and, if contaminated, have it decontaminated or disposed of by a cabinet, U.S. Nuclear Regulatory Commission, or agreement state licensee that is authorized to perform these functions.

(6) The licensee shall submit a report to the cabinet within five (5) days of receiving the test results, and the report shall describe the equipment involved in the leak, the test results, contamination that resulted from the leaking source, and the corrective actions taken up to the time that report is made.

(7) The following sealed sources shall be exempt from the periodic leak test requirements in subsections (1) through (5) of this section:

(a) Hydrogen – 3 (tritium) sources;

(b) Sources containing radioactive material with a half-life of thirty (30) days or less;

(c) Sealed sources containing radioactive material in gaseous form;

(d) Sources of beta- or gamma-emitting radioactive material with an activity of ten (10) microcuries (0.37 Bq) or less; and

(e) Sources of alpha- or neutron-emitting radioactive material with an activity of ten (10) microcuries (0.37 Bq) or less.

Section 7. Quarterly Inventory. (1) A licensee or registrant shall conduct a quarterly physical inventory to account for sources of radiation received or possessed by the licensee or registrant.

(2) Records of inventories shall be maintained for at least two (2) years from the date of the inventory for inspection by the cabinet and shall include:

(a) The quantities and kinds of sources of radiation;

(b) The location where sources of radiation are assigned;

(c) The date of the inventory; and

(d) The name of the individual conducting the inventory.

Section 8. Utilization Records. A licensee or registrant shall maintain current records, which shall be kept available for inspection by the cabinet for at least two (2) years from the date of the recorded event showing the following information for each source of radiation:

(1) A description (or make and model number or serial number) of each source of radiation used;

(2) The identity of the logging supervisor responsible for the radioactive material and identity of logging assistant present;

(3) Locations where used and dates of use; and

(4) In the case of tracer materials and radioactive markers, the utilization record shall also indicate the radionuclide and activity used at a particular well site.

Section 9. Design and Performance Criteria for Sealed Sources used in Downhole Operations. (1) A sealed source, except those containing radioactive material in gaseous form, used in downhole operations shall, as a minimum, meet the following criteria:

(a) Be of double encapsulated construction;

(b) Contain radioactive material whose chemical and physical form shall be as insoluble and nondispersible as practicable; and

(c) Meets the requirements of paragraphs (2), (3), and (4) of this section.

(2) For a sealed source manufactured on or before July 14, 1989, a licensee may use the sealed source in well logging applications if it meets the requirements of USASI N5.10-1968, Classification of Sealed Radioactive Sources, or the requirements in subsections (3) or (4) of this section.

(3) For a sealed source manufactured after July 14, 1989, a licensee may use the sealed source for use in well logging applications if it meets the oil-well logging requirements of ANSI/HPS N43.6-1997, Sealed Radioactive Sources – Classification.

(4) For a sealed source manufactured after July 14, 1989, a licensee may use the sealed source for use in well logging applications if the sealed source's prototype has been tested and found to maintain its integrity after each of the following tests:

(a) Temperature. The test source shall be held at minus forty (40) degrees Centigrade for twenty (20) minutes, 600 degrees Centigrade for one (1) hour, and then be subject to a thermal shock test with a temperature drop from 600 degrees Centigrade to twenty (20) degrees Centigrade within fifteen (15) seconds;

(b) Impact test. A five (5) kilogram steel hammer, two and five-tenths (2.5) centimeters in diameter, shall be dropped from a height of one (1) meter onto the test source;

(c) Vibration test. The test source shall be subject to a vibration from twenty-five (25) Hz to 500 Hz at five (5) g amplitude for thirty (30) minutes;

(d) Puncture test. A one (1) gram hammer and pin, three-tenths (0.3) centimeter in diameter, shall be dropped from a height of one (1) meter unto the test source.

(e) Pressure Test. The test source shall be subject to an external pressure of 1.695×10^7 pascals (24,600 pounds per square inch absolute).

(5) The requirements in subsections (1) through (4) of this section shall not apply to sealed sources that contain radioactive material in gaseous form.

(6) The requirements in subsections (1) through (4) of this section shall not apply to ECS sources, which shall be registered with the cabinet, U.S. Nuclear Regulatory Commission, or an agreement state.

(7) Certification documents shall be maintained for inspection by the cabinet for a period of at least two (2) years after source disposal.

(8) For sources abandoned downhole, certification documents shall be maintained until their disposal is authorized by the cabinet.

Section 10. Labeling. (1) A source, source holder, or logging tool containing radioactive material shall bear a durable, legible, and clearly visible marking or label that has, as a minimum, the standard radiation symbol without color requirement and the following wording: DANGER (or CAUTION) RADIOACTIVE.

(2) This labeling shall be on the smallest component, for example, source, source holder, or logging tool, that is transported as a separate piece of equipment.

(3) A transport container shall have permanently attached to it a durable legible and clearly visible label that has, at a minimum,

the standard radiation symbol and the following wording: DANGER (or CAUTION) RADIOACTIVE. Notify civil authorities (or name of company) if found.

Section 11. Inspection and Maintenance. (1) A licensee or registrant shall conduct, at intervals not to exceed six (6) months, a program of inspection of sealed sources and inspection and maintenance of source holders, logging tools, source handling tools, storage containers, transport containers, uranium sinker bars, and injection tools to assure proper labeling, operation, and physical condition.

(2) Records of inspection and maintenance shall be maintained for a period of at least two (2) years for inspection by the cabinet.

(3) If an inspection conducted pursuant to this section reveals damage to labeling or components critical to radiation safety, the device shall be removed from service until repairs have been made.

(4) The repair, opening, or other modification of a sealed source shall be performed only by persons specifically authorized to do so by the cabinet, the U. S. Nuclear Regulatory Commission, or an Agreement State.

(5) If a sealed source is stuck in the source holder, the licensee shall not perform any operation, for example drilling, cutting, or chiseling on the source holder unless the licensee is specifically licensed by the cabinet, U.S. Nuclear Regulatory Commission, or an agreement state to perform the operation.

Section 12. Training Requirements. (1) A licensee or registrant shall not permit an individual to act as a logging supervisor until the individual has:

(a) Completed a course recognized by the cabinet, an Agreement State, or the U. S. Nuclear Regulatory Commission covering the subjects outlined in Section 28 of this administrative regulation and shall have demonstrated an understanding of the subjects;

(b) Received copies of and demonstrated an understanding of the following:

1. The requirements contained in this administrative regulation;

2. Provisions of 902 KAR Chapter 100;

3. The conditions of the license or registration certificate issued by the cabinet; and

4. The licensee's or registrant's approved operating and emergency procedures;

(c) Completed on-the-job training and demonstrated competence in the use of sources of radiation, related handling tools, and radiation survey instruments that shall be employed in his assignment; and

(d) Demonstrated an understanding of the requirements in paragraphs (a) and (b) of this subsection by successfully completing a written test.

(2) A licensee or registrant shall not permit an individual to act as a logging assistant until the individual has:

(a) Read and received instruction in the licensee's or registrant's operating and emergency procedures, the requirements contained in this administrative regulation and other applicable provisions of 902 KAR Chapter 100 and shall have demonstrated understanding of the subjects;

(b) Demonstrated competence to use, under the personal supervision of the logging supervisor, the sources of radiation, related handling tools, and radiation survey instruments that will be employed in his assignment; and

(c) Demonstrated understanding of the requirements in paragraphs (a) and (b) of this subsection by successfully completing a written or oral test.

(3) A licensee or registrant shall maintain employee training records for inspection by the cabinet for at least two (2) years following termination of employment.

Section 13. Operating and Emergency Procedures. The licensee's or registrant's operating and emergency procedures shall include instructions in at least the following:

(1) The handling and use of sources of radiation to be employed so that an individual is not likely to be exposed to radiation doses in excess of the limits established in 902 KAR 100:019, Section 3;

(2) The handling and use of radioactive material including the use of sealed sources in wells without surface casing for protecting fresh water aquifers, if appropriate;

(3) The use of remote handling tools for handling sealed source and radioactive tracer material except low-activity calibration sources;

(4) Methods and occasions for conducting radiation surveys, including surveys for detecting contamination;

(5) Methods and occasions for locking and securing sources of radiation;

(6) Personnel monitoring and the use of personnel monitoring equipment;

(7) Transportation to temporary job sites and field stations, including:

(a) Packaging of sources of radiation in the vehicles;

(b) Placarding of vehicles, if needed; and

(c) Physically securing sources of radiation during transportation to prevent accidental loss, tampering, or unauthorized removal;

(8) Minimizing exposures of individuals from inhalation and ingestion of radioactive tracer material;

(9) The procedure for notifying proper personnel ***if an accident occurs[~~in the event of an accident~~]***;

(10) Maintenance of records, including records generated by logging personnel at temporary jobsites;

(11) The inspection of sealed sources;

(12) The inspection and maintenance of source holders, logging tools, source handling tools, storage containers, transport containers, uranium sinker bars, and injection tools;

(13) The procedures that shall be followed ***if[~~in the event~~]*** a sealed source is lodged downhole;

(14) Picking up, receiving, and opening packages containing radioactive material;

(15) Decontamination of the environment, equipment, and personnel if tracers are used; and

(16) Actions to be taken if a sealed source is ruptured or a sealed source is lodged in a well, including steps to:

(a) Prevent the spread of contamination;

(b) Minimize inhalation and ingestion of radioactive material; and

(c) Obtain suitable radiation survey instruments as required by Section 5 of this administrative regulation.

Section 14. Personnel Monitoring. (1) A licensee or registrant shall not permit an individual to act as a logging supervisor or logging assistant unless the individual wears, at all times during well service operations utilizing sources of radiation, a personal dosimeter that is processed and evaluated by an accredited NVLAP processor.

(2) A personal dosimeter shall be assigned to and worn by only one (1) individual.

(3) Film badges shall be replaced monthly and other personal dosimeters replaced at least quarterly.

(4) After replacement, a personal dosimeter shall be promptly processed.

(5) Personnel monitoring records shall be maintained for inspection by the cabinet until it authorizes disposal.

Section 15. Security. During logging or tracer applications, the logging supervisor or other designated employee shall maintain direct surveillance of the operation to protect against unauthorized or unnecessary entry into a restricted area.

Section 16. Handling Tools. The licensee shall provide and require the use of tools that shall assure remote handling of sealed sources other than low activity calibration sources.

Section 17. Tracer Studies. (1) Protective gloves and other ***[~~appropriate~~]***protective clothing shall be used by personnel handling radioactive tracer material.

(2) Care shall be taken to avoid ingestion or inhalation of

radioactive material.

(3) A licensee shall not permit injection of radioactive material into potable aquifers without prior written authorization from the cabinet.

Section 18. Uranium Sinker Bars. The licensee may use a uranium sinker bar in well logging applications only if it is legibly impressed with the words "CAUTION – RADIOACTIVE – DEPLETED URANIUM" and "NOTIFY CIVIL AUTHORITIES (or COMPANY NAME) IF FOUND."

Section 19. Energy Compensation Source (ECS). (1) The licensee may use an energy compensation source which is contained within a logging tool, or other tool components, only if the ECS contains quantities of radioactive material not exceeding 100 microcuries (3.7 MBq).

(2) For well logging applications with a surface casing for protecting fresh water aquifers, use of the ECS is only subject to the requirements of Sections 6, 7, and 8.

(3) For well logging applications without a surface casing for protecting fresh water aquifers, use of the energy compensation source is only subject to the requirements of Sections 1, 6, 7, 8, 20, and 27[~~25~~].

Section 20. Use of a Sealed Source in a Well Without a Surface Casing. A licensee may use a sealed source in a well without a surface casing for protecting fresh water aquifers only if the licensee follows a procedure, approved by the Cabinet, for reducing the probability of the source becoming lodged in the well.

Section 21. Particle Accelerators. A licensee or registrant shall not permit above ground testing of particle accelerators if the testing will result in the production of radiation except in areas or facilities controlled or shielded so that the requirements of 902 KAR 100:019 shall be met.

Section 22. Tritium Neutron Generator Target Source. (1) Use of a tritium neutron generator target source, containing quantities not exceeding thirty (30) curies (1,110 GBq) and in a well with a surface casing to protect fresh water aquifers shall be ***as*** established in this administrative regulation, except Sections 1, 9, and 27 ***of this administrative regulation***.

(2) Use of a tritium neutron generator target source, containing quantities exceeding thirty (30) curies (1,110 GBq) or in a well without a surface casing to protect fresh water aquifers shall be ***as*** established in this administrative regulation, except Section 9 of this administrative regulation.

Section 23. Radiation Surveys. (1) A radiation survey shall be made and recorded for each area where radioactive materials are stored and used.

(2) A radiation survey shall be made and recorded of the radiation levels in occupied positions and on the exterior of each vehicle used to transport radioactive materials.

(3) Each survey shall include each source of radiation and combination of sources of radiation transported in the vehicle.

(4) After removal of the sealed source from the logging tool and before departing the job site, the logging tool detector shall be energized, or a survey meter used, to assure that the logging tool is free of contamination.

(5) A radiation survey shall be made and recorded at the job site or well head for tracer operations, except for those using hydrogen-3, carbon-14, and sulfur-35.

(6) Each survey shall include radiation levels prior to and after the operation.

(7) Records required pursuant to this section shall include:

(a) The dates;

(b) The identification of the individual making the survey;

(c) Identification of survey instrument used; and

(d) An exact description of the location of the survey.

(8) Each survey record shall be maintained for inspection by the cabinet for at least two (2) years after completion of the survey.

Section 24. Radioactive Contamination Control. (1) If the licensee has reason to believe that, as a result of an operation involving a sealed source, the encapsulation of the sealed source may be damaged by the operation, the licensee shall conduct a radiation survey, including a contamination survey, during and after the operation.

(2) If the licensee detects evidence that a sealed source has ruptured or radioactive materials have caused contamination, the licensee shall initiate immediately the emergency procedures required by Section 13 of this administrative regulation.

(3) If contamination results from the use of radioactive material in well logging, the licensee shall decontaminate work areas, equipment, and unrestricted areas.

(4) During efforts to recover a sealed source lodged in the well, the licensee shall continuously monitor, with ***a radiation detector capable of detecting the radioactive material[~~an appropriate radiation detection instrument or a logging tool with a radiation detector~~]***, the circulating fluids from the well, if present, to check for contamination resulting from damage to the sealed source.

Section 25. Records Required at Field Stations. A licensee or registrant maintaining field stations from which well service operations are conducted shall have copies of the following records available at each station for inspection by the cabinet:

(1) Appropriate license or certificate of registration;

(2) Operating and emergency procedures;

(3) A copy of 902 KAR 100:019, 100:142, and 100:165;

(4) Survey records required pursuant to Section 23 of this administrative regulation;

(5) Quarterly inventories required pursuant to Section 7 of this administrative regulation;

(6) Utilization records required pursuant to Section 8 of this administrative regulation;

(7) Records of inspection and maintenance required pursuant to Section 11 of this administrative regulation;

(8) Records of the latest survey instrument calibration pursuant to Section 5 of this administrative regulation;

(9) Records of the latest leak test results pursuant to Section 6 of this administrative regulation; and

(10) Training records required by Section 12 of this administrative regulation.

Section 26. Records Required at Temporary Job Sites. (1) A licensee or registrant conducting a well service operation at a temporary job site shall have the following records available at that site for inspection by the cabinet:

(a) Operating and emergency procedures;

(b) Survey records required pursuant to Section 23 of this administrative regulation for the period of operation at the site;

(c) Evidence of current calibration for the radiation survey instruments in use at the site; and

(d) The shipping papers for the transportation of radioactive materials.

(2) In addition to the record requirements of this section, at each temporary job site where a well service operation is conducted under cabinet authorization granted pursuant to 902 KAR 100:065, a licensee or registrant shall have the following records available for inspection by the cabinet:

(a) Current leak test records for the sealed sources in use at the site;

(b) The appropriate license and certification of registration or equivalent document; and

(c) Shipping papers for the transport of radioactive material.

Section 27. Notification of Incidents and Lost Sources. (1) If the licensee knows or has reason to believe that a sealed source has been ruptured, the licensee shall:

(a) Immediately notify by telephone the Cabinet for Health and Family Services, Radiation Health Branch at (502) 564-3700 from 8 a.m.-4:30 p.m. Monday through Friday or at (800) 255-2587 at other hours; and

(b) Within thirty (30) days, notify by confirmatory letter to the

Manager, Radiation Health Branch, 275 East Main Street, Frankfort, Kentucky 40621. The letter shall:

1. Designate the well or other location;

2. Describe the magnitude and extent of the escape of radioactive materials;

3. Assess the consequences of the rupture; and

4. Explain efforts planned or being taken to mitigate these consequences.

(2) The licensee shall notify the Cabinet for Health and Family Services, Radiation Health Branch of the theft or loss of radioactive materials, radiation overexposures, excessive levels and concentrations of radiation, and certain other accidents as required by 902 KAR 100:019, Sections 38, 39, and 40 and 100:040, Section 15.

(3) If a sealed source or device containing radioactive material is lodged in a well and it becomes apparent that efforts to recover the sealed source will not be successful, the licensee shall:

(a) Notify the Cabinet for Health and Family Services, Radiation Health Branch, immediately by telephone at (502) 564-3700 from 8 a.m. - 4:30 p.m., Monday through Friday or at (800) 255-2587 at other hours of the circumstances that resulted in the inability to retrieve the source and obtain cabinet approval to implement abandonment procedures; or

(b) That the licensee implemented abandonment before receiving cabinet approval because the licensee believed there was an immediate threat to public health and safety.

(4) If it becomes apparent that efforts to recover the radioactive source shall not be successful, the licensee shall:

(a) Advise the well owner or well-operator of the requirements of this administrative regulation regarding abandonment and an appropriate method of abandonment, which shall include:

1. The immobilization and sealing in place of the radioactive source with a cement plug;

2. A means to prevent inadvertent intrusion on the source, unless the source is not accessible to any subsequent drilling operations; and

3. The mounting of a permanent identification plaque, containing information required by this section, at the surface of the well, unless the mounting of the plaque is not practical;

(b) Either ensure that abandonment procedures are implemented within thirty (30) days after the sealed source has been classified as irretrievable or request an extension of time if unable to complete the abandonment procedures; and

(c) File a written report on the abandonment with the Manager, Radiation Health Branch, 275 East Main Street, Frankfort, Kentucky 40621 within thirty (30) days after a sealed source has been classified as irretrievable. The report shall be sent to each appropriate state or federal agency that issued permits or approved of the drilling operation and shall include the following information:

1. Date of occurrence and a brief description of attempts to recover the source;

2. Description of the radioactive source involved, including radionuclide, quantity, and chemical and physical form;

3. Surface location and identification of well;

4. Results of efforts to immobilize and seal the source in place;

5. A brief description of the attempted recovery effort;

6. Depth of the radioactive source;

7. Depth of the top of the cement plug;

8. Depth of the well;

9. The immediate threat to public health and safety justification for implementing abandonment if prior cabinet approval was not obtained in accordance with subsection (6) of this section;

10. Information such as a warning statement, contained on the permanent identification plaque; and

11. State and federal agencies receiving a copy of this report.

(5) If a sealed source containing radioactive material is abandoned downhole, the licensee shall provide a permanent plaque mounted at the surface of the well. This plaque shall:

(a) Be constructed of long-lasting material, such as stainless steel, brass, bronze, or Monel. The size of the plaque shall be at least seven (7) inch, seventeen (17) cm square and one-eighth (1/8) inch (3mm) thick. Letter size of the word "Caution" shall be approximately twice the letter size of the rest of the information, for example, one-half (1/2) inch and one-fourth (1/4) inch letter size, respectively; and

(b) Contain the following engraved information on its face:

1. The word "Caution;"

2. The radiation symbol (color not required);

3. The date of abandonment;

4. The name of the well operator or well owner;

5. The well name and well identification number or other designation;

6. The sealed source by radionuclide and quantity of activity;

7. The source depth and the depth to the top of the plug;

8. An appropriate warning, depending on the specific circumstances of an abandonment, for example, "Do not drill below plug depth;" or "Do not enlarge casing;" and

9. The words "Do not reenter hole before contacting Radiation Health Branch, Kentucky Cabinet for Health and Family Services."

(6) If the licensee knows or has reason to believe that radioactive material has been lost in or to an underground potable water source, the licensee shall:

(a) Immediately notify the Cabinet for Health and Family Services, Radiation Health Branch by telephone at (502) 564-3700 from 8 a.m. - 4:30 p.m. Monday through Friday or at (800) 255-2587 at other hours; and

(b) Confirm by letter, within thirty (30) days, to the Manager, Radiation Health Branch, 275 East Main Street, Frankfort, Kentucky 40621.

(7) The notice shall designate the well location and shall describe the magnitude and extent of loss of radioactive material, assess the consequences of the loss, and explain efforts planned or being taken to mitigate consequences.

Section 28. Minimum Training Requirements for Logging Supervisors. Logging supervisors shall receive minimum training in the following areas:

(1) Fundamentals of radiation safety:

(a) Characteristics of gamma, neutron, and x-radiation;

(b) Units of radiation dose (mrem);

(c) Quantity of radioactivity (curie);

(d) Significance of radiation dose:

1. Radiation protection standards; and

2. Biological effects of radiation dose;

(e) Levels of radiation from sources of radiation;

(f) Methods of controlling radiation dose:

1. Working time;

2. Working distance; and

3. Shielding; and

(g) Radiation safety practices including prevention of contamination and methods of decontamination;

(2) Radiation detection instrumentation to be used:

(a) Use of radiation survey instruments:

1. Operation;

2. Calibration; and

3. Limitations;

(b) Survey techniques; and

(c) Use of personnel monitoring equipment;

(3) Equipment to be used:

(a) Remote handling equipment;

(b) Sources of radiation;

(c) Storage and transport containers; and

(d) Operation and control of equipment;

(4) The requirements of 10 C.F.R. Part 39 and 902 KAR Chapter 100;

(5) The licensee's or registrant's written operating and emergency procedures;

(6) The licensee's or registrant's recordkeeping procedures; and

(7) Case histories of well logging accidents.

Section 29. ***Incorporation***[~~***Material Incorporated***~~] by Reference. (1) The following material is incorporated by reference:

(a) "USASI N5.10-1968, Classification of Sealed Radioactive Sources",[~~edition~~] 1968; and

(b) "ANSI/HPS N43.6-1997, "Sealed Radioactive Sources – Classification",[~~edition~~] 1997.

(2) This material may be inspected, copied, or obtained, subject to applicable copyright law, at the Office of the Commissioner of Public Health, 275 East Main Street, Frankfort, Kentucky 40621, Monday through Friday, 8:00 a.m. to 4:30 p.m.

STEPHANIE MAYFIELD GIBSON, MD, FCAP, Commissioner
AUDREY TAYSE HAYNES, Secretary

APPROVED BY AGENCY: September 11, 2014

FILED WITH LRC: September 15, 2014 at 11 a.m.

CONTACT PERSON: Tricia Orme, Office of Legal Services, 275 East Main Street 5 W-B, Frankfort, Kentucky 40601, phone 502-564-7905, fax 502-564-7573, email tricia.orme@ky.gov.

CABINET FOR HEALTH AND FAMILY SERVICES
Department for Medicaid Services
Commissioner's Office
(As Amended at ARRS, December 9, 2014)

907 KAR 15:005. Definitions for 907 KAR Chapter 15.

RELATES TO: ***KRS*** 194A.025(3)

STATUTORY AUTHORITY: KRS 194A.010(1), 194A.030(2), 194A.050(1), 205.520(3), 42 U.S.C. 1396a

NECESSITY, FUNCTION, AND CONFORMITY: The Cabinet for Health and Family Services, Department for Medicaid Services, has responsibility to administer the Medicaid Program. KRS 205.520(3) authorizes the cabinet, by administrative regulation, to comply with a requirement that may be imposed or opportunity presented by federal law to qualify for federal Medicaid funds. This administrative regulation establishes the definitions for 907 KAR Chapter 15.

Section 1. Definitions. (1) "Advanced practice registered nurse" or "APRN" is defined by KRS 314.011(7).

(2) "Approved behavioral health services provider" means a provider that is:

(a) A physician;
(b) A psychiatrist;
(c) An advanced practice registered nurse;
(d) A physician assistant;
(e) A licensed psychologist;
(f) A licensed psychological practitioner;
(g) A licensed clinical social worker;
(h) A licensed professional clinical counselor;
(i) A licensed marriage and family therapist;
(j) A licensed psychological associate;
(k) A marriage and family therapy associate;
(l) A certified social worker;
(m) A licensed professional counselor associate;
(n) A licensed professional art therapist; or
(o) A licensed professional art therapist associate.

(3) **"Behavioral health practitioner" means*:***
(a) *An approved behavioral health services provider; or*
(b)[A physician;
(b) A psychiatrist;
(c) An advanced practice registered nurse;
(d) A physician assistant;
(e) A licensed psychologist;
(f) A licensed psychological practitioner;
(g) A licensed clinical social worker;
(h) A licensed professional clinical counselor;
(i) A licensed marriage and family therapist;
(j) A licensed psychological associate;
(k) A marriage and family therapy associate;
(l) A certified social worker;
(m) A licensed professional counselor associate;
(n) A licensed professional art therapist;
(o) A licensed professional art therapist associate; or
***(p)]* A certified alcohol and drug counselor.**

(4) "Behavioral health practitioner under supervision" means an individual who is:

(a)1. A licensed psychological associate;
2. A licensed professional counselor associate;
3. A certified social worker;
4. A marriage and family therapy associate;
5. A licensed professional art therapist associate;
6. A licensed assistant behavior analyst;
7. A physician assistant; or
8. A certified alcohol and drug counselor; and

(b) Employed by or under contract with the same billing provider as the billing supervisor.

(5) "Behavioral health *services[~~service~~]* organization" means an entity that is licensed as a behavioral health *services[~~service~~]* organization pursuant to 902 KAR *20:430[~~40:230~~]*.

(6)[~~(4)~~] "Billing provider" means the individual who,[~~or~~] group of individual providers that, or organization that:

(a) Is authorized to bill the department or a managed care organization for a service; and

(b) Is eligible to be reimbursed by the department or a managed care organization for a service.

(7)[~~(5)~~] "Billing supervisor" means an individual who is:

(a)1. A physician;
2. A psychiatrist;
3. An advanced practice registered nurse;
4. A licensed psychologist;
5. A licensed clinical social worker;
6. A licensed professional clinical counselor;
7. A licensed psychological practitioner;
8. A licensed marriage and family therapist;
9. A licensed professional art therapist; or
10. A licensed behavior analyst; and

(b) Employed by or under contract with the same billing provider as the behavioral health practitioner under supervision who renders services under the supervision of the billing supervisor.

(8)[~~(6)~~] "Certified alcohol and drug counselor" means an individual who meets the requirements established in KRS 309.083.

(9)[~~(7)~~][~~(4)~~] "Certified social worker" means an individual who meets the requirements established in KRS 335.080.

(10) "Community support associate" means a paraprofessional who meets the application, training, and supervision requirements of 908 KAR 2:250.

(11)[~~(8)~~][~~(5)~~] "Department" means the Department for Medicaid Services or its designee.

(12)[~~(9)~~][~~(6)~~] "Electronic signature" is defined by KRS 369.102(8).

(13)[~~(10)~~][~~(7)~~] "Enrollee" means a recipient who is enrolled with a managed care organization.

(14)[~~(11)~~][~~(8)~~] "Face-to-face" means occurring:

(a) In person; or

(b) **If authorized by 907 KAR 3:170,** via a real-time, electronic communication that involves two (2) way interactive video and audio communication.

(15)[~~(12)~~][~~(9)~~] "Family peer support specialist" means an individual who meets the requirements for a Kentucky family peer support specialist established in 908 KAR 2:230.

(16)[~~(13)~~][~~(10)~~] "Federal financial participation" is defined by 42 C.F.R. 400.203.

(17)[~~(14)~~] "Healthcare common procedure coding system" or "HCPCS" means a collection of codes acknowledged by the Centers for Medicare and Medicaid Services (CMS) that represents procedures or items.

(18)[~~(15)~~][~~(11)~~] "Licensed assistant behavior analyst" is defined by KRS 319C.010(7).

(19)[~~(16)~~][~~(12)~~] "Licensed behavior analyst" is defined by KRS 319C.010(6).

(20)[~~(17)~~][~~(13)~~] "Licensed clinical social worker" means an individual who meets the licensed clinical social worker requirements established in KRS 335.100.

(21)[~~(18)~~][~~(14)~~] "Licensed marriage and family therapist" is defined by KRS 335.300(2).

(22)[~~(19)~~][~~(15)~~] "Licensed professional art therapist" is defined by KRS 309.130(2).

(23)[~~(20)~~][~~(16)~~] "Licensed professional art therapist associate" is defined by KRS 309.130(3).

(24)[~~(21)~~][~~(17)~~] "Licensed professional clinical counselor" is defined by KRS 335.500(3).

(25)[~~(22)~~][~~(18)~~] "Licensed professional counselor associate" is defined by KRS 335.500(4).

(26)[~~(23)~~][~~(19)~~] "Licensed psychological associate" means an individual who:

(a)1. Currently possesses a licensed psychological associate license in accordance with KRS 319.010(6); and

2. Meets the licensed psychological associate requirements established in 201 KAR Chapter 26; or

(b) Is a certified psychologist.

(27)[~~(24)~~][~~(20)~~] "Licensed psychological practitioner" means an individual who:

(a) Meets the requirements established in KRS 319.053; or

(b) Is a certified psychologist with autonomous functioning.

(28)[~~(25)~~][~~(21)~~] "Licensed psychologist" means an individual who:

(a) Currently possesses a licensed psychologist license in accordance with KRS 319.010(6); and

(b) Meets the licensed psychologist requirements established in 201 KAR Chapter 26.

(29)[~~(26)~~][~~(22)~~] "Managed care organization" means an entity for which the Department for Medicaid Services has contracted to serve as a managed care organization as defined in 42 C.F.R. 438.2.

(30)[~~(27)~~][~~(23)~~] "Marriage and family therapy associate" is defined by KRS 335.300(3).

(31)[~~(28)~~][~~(24)~~] "Medically necessary" or "medical necessity" means that a covered benefit is determined to be needed in accordance with 907 KAR 3:130.

(32)[~~(29)~~][~~(25)~~] "Peer support specialist" means an individual who meets the peer specialist qualifications established in 908 KAR 2:220.

(33)[~~(30)~~][~~(26)~~] "Person-centered service plan" means a plan of services for a recipient that meets the requirements established in 42 C.F.R. 441.540.

(34)[~~(31)~~][~~(27)~~] "Physician" is defined by KRS 205.510(11).

(35)[~~(32)~~][~~(28)~~] "Physician assistant" is defined by KRS 311.840(3).

(36)[~~(33)~~][~~(29)~~] "Provider" is defined by KRS 205.8451(7).

(37)[~~(34)~~][~~(30)~~] "Provider abuse" is defined by KRS 205.8451(8).

(38)[~~(35)~~][~~(31)~~] "Provider group" means a group of more than one (1) individually licensed practitioners who form a business entity to:

(a) Render health services; and

(b) Bill the Medicaid Program for services rendered to Medicaid recipients.

(39)[~~(36)~~][~~(32)~~] "Recipient" is defined by KRS 205.8451(9).

(40)[~~(37)~~][~~(32)~~] "Recipient abuse" is defined by KRS 205.8451(10).

(41)[~~(38)~~][~~(33)~~] "Registered nurse" is defined by KRS 314.011(5).

(42) "Residential crisis stabilization unit" means an entity that is licensed as a residential crisis stabilization unit pursuant to 902 KAR 20:440.

(43) "Section 504 plan" means a plan developed to ensure that a child who has a disability identified under the law and is attending an elementary or secondary educational institution receives accommodations to ensure the child's academic success and access to the learning environment.

(44)[~~(39)~~][~~(34)~~] "Youth peer support specialist" means an individual who meets the requirements established for a Kentucky youth peer support specialist established in 908 KAR 2:240.

LAWRENCE KISSNER, Commissioner
AUDREY TAYSE HAYNES, Secretary

APPROVED BY AGENCY: November 12, 2014

FILED WITH LRC: November 13, 2014 at 2 p.m.

CONTACT PERSON: Tricia Orme, tricia.orme@ky.gov, Office of Legal Services, 275 East Main Street 5 W-B, Frankfort, Kentucky 40601, phone (502) 564-7905, fax (502) 564-7573.

CABINET FOR HEALTH AND FAMILY SERVICES
Department for Medicaid Services
Division of Policy and Operations
(As Amended at ARRS, December 9, 2014)

907 KAR 15:020. Coverage provisions and requirements regarding services provided by behavioral health *services[~~service~~]* organizations.

RELATES TO: KRS 205.520, 42 U.S.C. 1396a(a)(10)(B), 42 U.S.C. 1396a(a)(23)

STATUTORY AUTHORITY: KRS 194A.030(2), 194A.050(1), 205.520(3)

NECESSITY, FUNCTION, AND CONFORMITY: The Cabinet for Health and Family Services, Department for Medicaid Services, has a responsibility to administer the Medicaid Program. KRS 205.520(3) authorizes the cabinet, by administrative regulation, to comply with any requirement that may be imposed or opportunity presented by federal law to qualify for federal Medicaid funds. This administrative regulation establishes the coverage provisions and requirements regarding Medicaid Program behavioral health services provided by behavioral health services organizations.

Section 1. General Coverage Requirements. (1) For the department to reimburse for a service covered under this administrative regulation, the service shall be:

(a) Medically necessary; and

(b) Provided:

1. To a recipient; and

2. By a behavioral health services organization that meets the provider participation requirements established in Section 2 of this administrative regulation.

(2)(a) Direct contact between a practitioner and a recipient shall be required for each service except for**[a]** collateral **outpatient therapy[~~service~~]** for a child under the age of twenty-one (21) years if the collateral **outpatient therapy[~~service~~]** is in the child's plan of care.

(b) A service that does not meet the requirement in paragraph (a) of this subsection shall not be covered.

(3) A billable unit of service shall be actual time spent delivering a service in a face-to-face encounter.

(4) A service shall be:

(a) Stated in the recipient's**[~~treatment~~]** plan **of care**; and

(b) Provided in accordance with the recipient's**[~~treatment~~]** plan **of care**.

(5)(a) A behavioral health services organization shall establish a plan of care for each recipient receiving services from the behavioral health services organization.

(b) A plan of care shall meet the plan of care requirements established in 902 KAR 20:430.

Section 2. Provider Participation. (1) To be eligible to provide services under this administrative regulation, a behavioral health services organization shall:

(a) Be currently enrolled in the Kentucky Medicaid Program in accordance with 907 KAR 1:672;

(b) Except as established in subsection (2) of this section, be currently participating in the Kentucky Medicaid Program in accordance with 907 KAR 1:671; ***and***

(c) ***[~~Be licensed as a behavioral health services organization in accordance with 902 KAR 20:430; and~~***

~~(d)~~] Have:

1. For each service it provides, the capacity to provide the full range of the service as established in this administrative regulation;

2. Demonstrated experience in serving individuals with behavioral health disorders;

3. The administrative capacity to ensure quality of services;

4. A financial management system that provides

documentation of services and costs; and

5. The capacity to document and maintain individual case records.

(2) In accordance with 907 KAR 17:015, Section 3(3), a behavioral health services organization which provides a service to an enrollee shall not be required to be currently participating in the fee-for-service Medicaid Program.

(3) A behavioral health services organization shall:

(a) Agree to provide services in compliance with federal and state laws regardless of age, sex, race, creed, religion, national origin, handicap, or disability; and

(b) Comply with the Americans with Disabilities Act (42 U.S.C. 12101 et seq.) and any amendments to the Act.

Section 3. Covered Services. (1) Except as specified in the requirements stated for a given service, the services covered may be provided for a:

(a) Mental health disorder;

(b) Substance use disorder; or

(c) Co-occurring mental health and substance use disorders.

(2) The following services shall be covered under this administrative regulation in accordance with the corresponding following requirements:

(a) A screening, crisis intervention, or intensive outpatient program **service**[~~services~~] provided by:

1. A licensed psychologist;
2. A licensed psychological practitioner;
3. A licensed clinical social worker;
4. A licensed professional clinical counselor;
5. A licensed professional art therapist;
6. A licensed marriage and family therapist;
7. A physician;
8. A psychiatrist;
9. An advanced practice registered nurse; or
10. A behavioral health practitioner under supervision except for a licensed assistant behavior analyst;

(b) An assessment provided by:

1. A licensed psychologist;
2. A licensed psychological practitioner;
3. A licensed clinical social worker;
4. A licensed professional clinical counselor;
5. A licensed professional art therapist;
6. A licensed marriage and family therapist;
7. A physician;
8. A psychiatrist;
9. An advanced practice registered nurse;
10. A licensed behavior analyst; or
11. A behavioral health practitioner under supervision[~~except for a certified alcohol and drug counselor~~];

(c) Psychological testing provided by:

1. A licensed psychologist;
2. A licensed psychological associate working under the supervision of a licensed psychologist; or
3. A licensed psychological practitioner;

(d) Day treatment, mobile crisis services, or residential services for substance use disorders provided by:

1. A licensed psychologist;
2. A licensed psychological practitioner;
3. A licensed clinical social worker;
4. A licensed professional clinical counselor;
5. A licensed professional art therapist;
6. A licensed marriage and family therapist;
7. A physician;
8. A psychiatrist;
9. An advanced practice registered nurse;
10. A behavioral health practitioner under supervision except for a licensed assistant behavior analyst; or
11. A peer support specialist working under the supervision of**:**

a. An approved behavioral health services provider; **or**

b. A certified alcohol and drug counselor;

(e) Peer support provided by a peer support specialist working under the supervision of**:**

1. An approved behavioral health ***services[~~service~~]*** provider; **or**

2. A certified alcohol and drug counselor;

(f) Individual outpatient therapy, group outpatient therapy, or collateral outpatient therapy provided by:

1. A licensed psychologist;
2. A licensed psychological practitioner;
3. A licensed clinical social worker;
4. A licensed professional clinical counselor;
5. A licensed professional art therapist;
6. A licensed marriage and family therapist;
7. A physician;
8. A psychiatrist;
9. An advanced practice registered nurse;
10. A licensed behavior analyst; or
11. A behavioral health practitioner under supervision[~~except for a certified alcohol and drug counselor~~];

(g) Family outpatient therapy provided by:

1. A licensed psychologist;
2. A licensed psychological practitioner;
3. A licensed clinical social worker;
4. A licensed professional clinical counselor;
5. A licensed professional art therapist;
6. A licensed marriage and family therapist;
7. A physician;
8. A psychiatrist;
9. An advanced practice registered nurse; or
10. A behavioral health practitioner under supervision except for a[~~:~~

[~~a.~~] licensed assistant behavior analyst[~~; or~~

[~~b. Certified alcohol and drug counselor~~];

(h) Service planning provided by:

1. A licensed psychologist;
2. A licensed psychological practitioner;
3. A licensed clinical social worker;
4. A licensed professional clinical counselor;
5. A licensed professional art therapist;
6. A licensed marriage and family therapist;
7. A physician;
8. A psychiatrist;
9. An advanced practice registered nurse;
10. A licensed behavior analyst; or
11. A behavioral health practitioner under supervision except for a certified alcohol and drug counselor;

(i) A screening, brief intervention, and referral to treatment for a substance use disorder ***or SBIRT*** provided by:

1. A licensed psychologist;
2. A licensed psychological practitioner;
3. A licensed clinical social worker;
4. A licensed professional clinical counselor;
5. A licensed professional art therapist;
6. A licensed marriage and family therapist;
7. A physician;
8. A psychiatrist;
9. An advanced practice registered nurse; or
10. A behavioral health practitioner under supervision except for a licensed assistant behavior analyst;

(j) Assertive community treatment provided by:

1. A licensed psychologist;
2. A licensed psychological practitioner;
3. A licensed clinical social worker;
4. A licensed professional clinical counselor;
5. A licensed professional art therapist;
6. A licensed marriage and family therapist;
7. A physician;
8. A psychiatrist;
9. An advanced practice registered nurse;
10. A behavioral health practitioner under supervision except for a:

a. Licensed assistant behavior analyst; or

b. Certified alcohol and drug counselor;

11. A peer support specialist working under the supervision of an approved behavioral health ***services[~~service~~]*** provider; or

12. A community support associate;

(k) Comprehensive community support services provided by:
1. A licensed psychologist;
2. A licensed psychological practitioner;
3. A licensed clinical social worker;
4. A licensed professional clinical counselor;
5. A licensed professional art therapist;
6. A licensed marriage and family therapist;
7. A physician;
8. A psychiatrist;
9. An advanced practice registered nurse;
10. A licensed behavior analyst;
11. A behavioral health practitioner under supervision except for a certified alcohol and drug counselor; or
12. A community support associate; or
(l) Therapeutic rehabilitation program services provided by:
1. A licensed psychologist;
2. A licensed psychological practitioner;
3. A licensed clinical social worker;
4. A licensed professional clinical counselor;
5. A licensed professional art therapist;
6. A licensed marriage and family therapist;
7. A physician;
8. A psychiatrist;
9. An advanced practice registered nurse;
10. A behavioral health practitioner under supervision except for a:
a. Licensed assistant behavior analyst; or
b. Certified alcohol and drug counselor; or
11. A peer support specialist working under the supervision of an approved behavioral health services provider.
(3)(a) A screening shall:
1. Be the determination of the likelihood that an individual has a mental health disorder, substance use disorder, or co-occurring disorders;
2. Not establish the presence or specific type of disorder; and
3. Establish the need for an in-depth assessment.
(b) An assessment shall:
1. Include gathering information and engaging in a process with the individual that enables the practitioner to:
a. Establish the presence or absence of a mental health disorder, substance use disorder, or co-occurring disorders;
b. Determine the individual's readiness for change;
c. Identify the individual's strengths or problem areas that may affect the treatment and recovery processes; and
d. Engage the individual in developing an appropriate treatment relationship;
2. Establish or rule out the existence of a clinical disorder or service need;
3. Include working with the individual to develop a***[~~treatment and service~~]*** plan ***of care***; and
4. Not include psychological or psychiatric evaluations or assessments.
(c) Psychological testing shall include:
1. A psychodiagnostic assessment of personality, psychopathology, emotionality, or intellectual disabilities; and
2. Interpretation and a written report of testing results.
(d) Crisis intervention:
1. Shall be a therapeutic intervention for the purpose of immediately reducing or eliminating the risk of physical or emotional harm to:
a. The recipient; or
b. Another individual;
2. Shall consist of clinical intervention and support services necessary to provide integrated crisis response, crisis stabilization interventions, or crisis prevention activities for individuals;
3. Shall be provided:
a. On-site at the behavioral health services organization's office;
b. As an immediate relief to the presenting problem or threat; and
c. In a face-to-face, one (1) on one (1) encounter between the provider and the recipient;
4. Shall be followed by a referral to non-crisis services if applicable; and
5. May include:
a. Further service prevention planning including:
(i) Lethal means reduction for suicide risk; or
(ii) Substance use disorder relapse prevention; or
b. Verbal de-escalation, risk assessment, or cognitive therapy.
(e) Mobile crisis services shall:
1. Be available twenty-four (24) hours a day, seven (7) days a week, every day of the year;
2. Be provided for a duration of less than twenty-four (24) hours;
3. Not be an overnight service;**[~~and~~]**
4. Be a **multi-disciplinary team based intervention[~~crisis response~~]** in a home or community setting **that ensures[~~to provide an immediate evaluation, triage, and~~]** access to **mental health and substance use disorder[~~behavioral health~~]** services **[~~including treatment~~]** and supports to:
(i) Reduce symptoms or harm; or
(ii) Safely transition an individual in an acute crisis to the appropriate least restrictive level of care**;**
5. Involve all services and supports necessary to provide:
a. Integrated crisis prevention;
b. Assessment and disposition;
c. Intervention;
d. Continuity of care recommendations; and
e. Follow-up services; and
6. Be provided face-to-face in a home or community setting.
(f)1. Day treatment shall be a non-residential, intensive treatment program for a child under the age of twenty-one (21) years who has:
a. A mental health disorder, substance use disorder, or co-occurring mental health and substance use disorders; and
b. A high risk of out-of-home placement due to a behavioral health issue.
2. Day treatment shall:
a. Consist of an organized, behavioral health program of treatment and rehabilitative services**[~~for an individual with a substance use disorder, mental health disorder, or co-occurring mental health and substance use disorders~~]**;
b. Include:
(i) Individual outpatient therapy, family outpatient therapy, or group outpatient therapy;
(ii) Behavior management and social skills training;
(iii) Independent living skills that correlate to the age and **developmental[~~development~~]** stage of the recipient; or
(iv) Services designed to explore and link with community resources before discharge and to assist the recipient and family with transition to community services after discharge; and
c. Be provided:
(i) In collaboration with the education services of the local education authority including those provided through 20 U.S.C. 1400 et seq. (Individuals with Disabilities Education Act) or 29 U.S.C. 701 et seq. (Section 504 of the Rehabilitation Act);
(ii) On school days and during scheduled school breaks;
(iii) In coordination with the recipient's individualized educational plan **or Section 504 plan** if the recipient has an individualized educational plan **or Section 504 plan**;
(iv) Under the supervision of a licensed or certified behavioral health practitioner or a behavioral health practitioner working under clinical supervision; and
(v) With a linkage agreement with the local education authority that specifies the responsibilities of the local education authority and the day treatment provider.
3. To provide day treatment services, a behavioral health services organization shall have:
a. The capacity to employ staff authorized to provide day treatment services in accordance with this section and to coordinate the provision of services among team members; and
b. Knowledge of substance use disorders.
4. Day treatment shall not include a therapeutic clinical service that is included in a child's individualized education plan ***or Section 504 plan***.

(g)1. Peer support services shall:

a. Be**[~~social and~~]** emotional support that is provided by**:**

(i) An individual who **has been trained and certified in accordance with 908 KAR 2:220 and who** is experiencing **or has experienced** a mental health disorder, substance use disorder, or co-occurring mental health and substance use disorders to a recipient by sharing a similar mental health disorder, substance use disorder, or co-occurring mental health and substance use disorders in order to bring about a desired social or personal change;

(ii) A parent, who has been trained and certified in accordance with 908 KAR 2:230, of a child having or who has had a mental health, substance use, or co-occurring mental health and substance use *disorders[~~disorder~~]* to a parent or family member of a child sharing a similar mental health, substance use, or co-occurring mental health and substance use *disorders[~~disorder~~]* in order to bring about a desired social or personal change; or

(iii) A family member, who has been trained and certified in accordance with 908 KAR 2:230, of a child having or who has had a mental health, substance use, or co-occurring mental health and substance use *disorders[~~disorder~~]* to a parent or family member of a child sharing a similar mental health, substance use, or co-occurring mental health and substance use *disorders[~~disorder~~]* in order to bring about a desired social or personal change;

b. Be an evidence-based practice;

c. Be structured and scheduled non-clinical therapeutic activities with an individual recipient or a group of recipients;

d.**[~~Be provided by a self-identified consumer, parent, or family member:~~**

~~(i) Of a child consumer of mental health disorder services, substance use disorder services, or co-occurring mental health disorder services and substance use disorder services; and~~

~~(ii) Who has been trained and certified in accordance with 908 KAR 2:220, 908 KAR 2:230, or 908 KAR 2:240;~~

~~e.~~] Promote socialization, recovery, self-advocacy, preservation, and enhancement of community living skills for the recipient;

e.[~~f.~~] Be coordinated within the context of a comprehensive, individualized**[~~treatment~~]** plan **of care** developed through a person-centered planning process;

f.[~~g.~~] Be identified in each recipient's**[~~treatment~~]** plan **of care**; and

g.[~~h.~~] Be designed to directly contribute to the recipient's individualized goals as specified in the recipient's**[~~treatment~~]** plan **of care**.

2. To provide peer support services, a behavioral health services organization shall:

a. Have demonstrated:

(i) The capacity to provide peer support services for the behavioral health population being served including the age range of the population being served; and

(ii) Experience in serving individuals with behavioral health disorders;

b. Employ peer support specialists who are qualified to provide peer support services in accordance with 908 KAR 2:220, 908 **KAR** 2:230, or 908 **KAR** 2:240;

c. Use an approved behavioral health services provider **or certified alcohol and drug counselor** to supervise peer support specialists;

d. Have the capacity to coordinate the provision of services among team members; and

e. Have the capacity to provide on-going continuing education and technical assistance to peer support specialists.

(h)1. Intensive outpatient program services shall:

a. Be an alternative to or transition from inpatient hospitalization or partial hospitalization for a mental health disorder, substance use disorder, or co-occurring disorders;

b. Offer a multi-modal, multi-disciplinary structured outpatient treatment program that is significantly more intensive than individual outpatient therapy, group outpatient therapy, or family outpatient therapy;

c. Be provided at least three (3) hours per day at least three (3) days per week; and

d. Include:

(i) Individual outpatient therapy, group outpatient therapy, or family outpatient therapy unless contraindicated;

(ii) Crisis intervention; or

(iii) Psycho-education.

2. During psycho-education**,** the recipient or recipient's family member shall be:

a. Provided with knowledge regarding the recipient's diagnosis, the causes of the condition, and the reasons why a particular treatment might be effective for reducing symptoms; and

b. Taught how to cope with the recipient's diagnosis or condition in a successful manner.

3. An intensive outpatient program services treatment plan shall:

a. Be individualized; and

b. Focus on stabilization and transition to a lesser level of care.

4. To provide intensive outpatient program services, a behavioral health services organization shall have:

a. Access to a board-certified or board-eligible psychiatrist for consultation;

b. Access to a psychiatrist, ***[~~other~~]***physician, or advanced practiced registered nurse for medication prescribing and monitoring;

c. Adequate staffing to ensure a minimum recipient-to-staff ratio of ten (10) recipients to one (1) staff person;

d. The capacity to provide services utilizing a recognized intervention protocol based on nationally accepted treatment principles; and

e. The capacity to employ staff authorized to provide intensive outpatient program services in accordance with this section and to coordinate the provision of services among team members.

(i) Individual outpatient therapy shall:

1. Be provided to promote the:

a. Health and wellbeing of the individual; and

b. Recovery from a substance use disorder, mental health disorder, or co-occurring mental health and substance use disorders;

2. Consist of:

a. A face-to-face, one (1) on one (1) encounter between the provider and recipient; and

b. A behavioral health therapeutic intervention provided in accordance with the recipient's identified**[~~treatment~~]** plan **of care**;

3. Be aimed at:

a. Reducing adverse symptoms;

b. Reducing or eliminating the presenting problem of the recipient; and

c. Improving functioning; and

4. Not exceed three (3) hours per day unless additional time is medically necessary.

(j)1. Group outpatient therapy shall:

a. Be a behavioral health therapeutic intervention provided in accordance with a recipient's identified**[~~treatment~~]** plan **of care**;

b. Be provided to promote the:

(i) Health and wellbeing of the individual; and

(ii) Recovery from a substance use disorder, mental health disorder, or co-occurring mental health and substance use disorders;

c. Consist of a face-to-face behavioral health therapeutic intervention provided in accordance with the recipient's identified**[~~treatment~~]** plan **of care**;

d. Be provided to a recipient in a group setting:

(i) Of nonrelated individuals **except for multi-family group therapy**; and

(ii) Not to exceed twelve (12) individuals in size;

e. Focus on the psychological needs of the recipients as evidenced in each recipient's**[~~treatment~~]** plan **of care**;

f. Center on goals including building and maintaining healthy relationships, personal goals setting, and the exercise of personal judgment;

g. Not include physical exercise, a recreational activity, an

educational activity, or a social activity; and

h. Not exceed three (3) hours per day per recipient unless additional time is medically necessary.

2. The group shall have a:

a. Deliberate focus; and

b. Defined course of treatment.

3. The subject of group outpatient therapy shall relate to each recipient participating in the group.

4. The provider shall keep individual notes regarding each recipient within the group and within each recipient's health record.

(k)1. Family outpatient therapy shall consist of a face-to-face behavioral health therapeutic intervention provided:

a. Through scheduled therapeutic visits between the therapist and the recipient and at least one (1) member of the recipient's family; and

b. To address issues interfering with the relational functioning of the family and to improve interpersonal relationships within the recipient's home environment.

2. A family outpatient therapy session shall be billed as one (1) service regardless of the number of individuals (including multiple members from one (1) family) who participate in the session.

3. Family outpatient therapy shall:

a. Be provided to promote the:

(i) Health and wellbeing of the individual; or

(ii) Recovery from a substance use disorder, mental health disorder, or co-occurring mental health and substance use disorders; and

b. Not exceed three (3) hours per day per individual unless additional time is medically necessary.

(l)1. Collateral outpatient therapy shall:

a. Consist of a face-to-face behavioral health consultation:

(i) With a parent or caregiver of a recipient, household member of a recipient, legal representative of a recipient, school personnel, treating professional, or other person with custodial control or supervision of the recipient; and

(ii) That is provided in accordance with the recipient's**[~~treatment~~]** plan **of care**;

b. Not be reimbursable if the therapy is for a recipient who is at least twenty-one (21) years of age; and

c. Not exceed three (3) hours per day per individual unless additional time is medically necessary.

2. Consent to discuss a recipient's treatment with any person other than a parent or legal guardian shall be signed and filed in the recipient's health record.

(m)1. Service planning shall:

a. Involve assisting a recipient in creating an individualized plan for services needed for maximum reduction of **the effects of** a mental health **disorder[~~disability~~]**;

b. Involve restoring a recipient's functional level to the recipient's best possible functional level; and

c. Be performed using a person-centered planning process.

2. A service plan:

a. Shall be directed by the recipient;

b. Shall include practitioners of the recipient's choosing; and

c. May include:

(i) A mental health advance directive being filed with a local hospital;

(ii) A crisis plan; or

(iii) A relapse prevention strategy or plan.

(n)1. Residential services for substance use disorders shall:

a. Be provided in a twenty-four (24) hour per day unit that is a live-in facility that offers a planned and structured regimen of care aimed to treat individuals with addiction or co-occurring mental health and substance use disorders;

b. Be short or long-term to provide intensive treatment and skills building in a structured and supportive environment;

c. Assist an individual in abstaining from alcohol or substance use and in entering alcohol or drug addiction recovery;

d. Assist a recipient in making necessary changes in the recipient's life to enable the recipient to live drug- or alcohol-free;

e. Be provided under the medical direction of a physician;

f. Provide continuous nursing services **in which a registered nurse shall be:**

(i) On-site during traditional first shift hours, Monday through Friday;

(ii) Continuously available by phone after hours; and

(iii) On-site as needed in follow-up to telephone consultation after hours;

g. Be based on individual need and may include:

(i) A screening;

(ii) An assessment;

(iii) Service planning;

(iv) Individual outpatient therapy;

(v) Group outpatient therapy;

(vi) Family outpatient therapy; or

(vii) Peer support; and

h. Be provided in accordance with 908 KAR 1:370.

2.**a. Except as established in clause b of this subparagraph,** the physical structure in which residential services for substance use disorders is provided shall:

(i)[~~a.~~] Have ***between nine (9) and sixteen (16)[~~more than eight (8) but sixteen (16) or fewer~~]*****[~~less than seventeen (17)~~]** beds; and

(ii)[~~b.~~] Not be part of multiple units comprising one (1) facility with more than sixteen (16) beds in aggregate.

b. If every recipient receiving services in the physical structure is under the age of twenty-one (21) years or over the age of sixty-five (65) years, the limit of sixteen (16) beds established in clause a of this subparagraph shall not apply.

3. A short-term length-of-stay for residential services for substance use disorders:

a. Shall be less than thirty (30) days in duration;

b. Shall include planned clinical program activities constituting at least fifteen (15) hours per week of structured professionally-directed treatment activities to:

(i) Stabilize a recipient's substance use disorder; and

(ii) Help the recipient develop and apply recovery skills; and

c. May include the services listed in subparagraph ***1.g.[~~1.gh.~~]*** of this paragraph.

4. A long-term length-of-stay for residential services for substance use disorders:

a. Shall be between thirty (30) days and ninety (90) days in duration;

b. Shall include planned clinical program activities constituting at least forty (40) hours per week of structured professionally-directed treatment activities to:

(i) Stabilize a recipient's substance use disorder; and

(ii) Help the recipient develop and apply recovery skills; and

c. May include the services listed in subparagraph 1.g. of this paragraph.

5. Residential services for substance use disorders shall not include:

a. Room and board;

b. Educational services;

c. Vocational services;

d. Job training services;

e. Habilitation services;

f. Services to an inmate in a public institution pursuant to 42 C.F.R. 435.1010;

g. Services to an individual residing in an institution for mental diseases pursuant to 42 C.F.R. 435.1010;

h. Recreational activities;

i. Social activities; or

j. Services required to be covered elsewhere in the Medicaid state plan.

6. To provide residential services for substance use disorders, a behavioral health services organization shall:

a. Have the capacity to employ staff authorized to provide services in accordance with this section and to coordinate the provision of services among team members; and

b. Be licensed as a non-medical and non-hospital based alcohol and other drug abuse treatment program in accordance with 908 KAR 1:370.

(o) Screening, brief intervention, and referral to treatment for a substance use disorder shall:

1. Be an evidence-based early intervention approach for an

individual with non-dependent substance use to provide an effective strategy for intervention prior to the need for more extensive or specialized treatment; and

2. Consist of:

a. Using a standardized screening tool to assess an individual for risky substance use behavior;

b. Engaging a recipient, who demonstrates risky substance use behavior, in a short conversation and providing feedback and advice; and

c. Referring a recipient to additional mental health disorder, substance use disorder, or co-occurring disorders services if the recipient is determined to need additional services to address substance use.

(p)1. Assertive community treatment shall:

a. Be an evidence-based psychiatric rehabilitation practice which provides a comprehensive approach to service delivery for individuals with a serious mental illness; and

b. Include:

(i) Assessment;

(ii) Treatment planning;

(iii) Case management;

(iv) Psychiatric services;

(v) Medication prescribing and monitoring;

(vi) Individual outpatient therapy;

(vii) Family outpatient therapy;

(viii) Group outpatient therapy;

(ix) Mobile crisis services;

(x) Crisis intervention;

(xi) Mental health consultation; or

(xii) Family support and basic living skills.

2.a. Mental health consultation shall involve brief, collateral interactions with other treating professionals who may have information for the purpose of treatment planning and service delivery.

b. Family support shall involve the assertive community treatment team's working with the recipient's natural support systems to improve family relations in order to:

(i) Reduce conflict; and

(ii) Increase the recipient's autonomy and independent functioning.

c. Basic living skills shall be rehabilitative services focused on teaching activities of daily living necessary to maintain independent functioning and community living.

3. To provide assertive community treatment services, a behavioral health services organization shall:

a. Employ at least one (1) team of multidisciplinary professionals:

(i) Led by **an approved behavioral health services provider[a qualified mental health professional]**; and

(ii) Comprised of at least four (4) full-time equivalents including a prescriber, a nurse, an approved behavioral health services provider, a case manager, or a co-occurring disorder specialist;

b. Have adequate staffing to ensure that no team's caseload size exceeds ten (10) participants per team member (for example, if the team includes five (5) individuals, the caseload for the team shall not exceed fifty (50) recipients);

c. Have the capacity to:

(i) Employ staff authorized to provide assertive community treatment services in accordance with this paragraph;

(ii) Coordinate the provision of services among team members;

(iii) Provide the full range of assertive community treatment services as stated in this paragraph; and

(iv) Document and maintain individual case records; and

d. Demonstrate experience in serving individuals with persistent and serious mental illness who have difficulty living independently in the community.

(q)1. Comprehensive community support services shall:

a. Be activities necessary to allow an individual to live with maximum independence in the community;

b. Be intended to ensure successful community living through the utilization of skills training as identified in the recipient's**[treatment]** plan **of care**; and

c. Consist of using a variety of psychiatric rehabilitation techniques to:

(i) Improve daily living skills;

(ii) Improve self-monitoring of symptoms and side effects;

(iii) Improve emotional regulation skills;

(iv) Improve crisis coping skills; and

(v) Develop and enhance interpersonal skills.

2. To provide comprehensive community support services, a behavioral health services organization shall:

a. Have the capacity to employ staff authorized pursuant to 908 KAR 2:250 to provide comprehensive community support services in accordance with subsection (2)(k) of this section and to coordinate the provision of services among team members; and

b. Meet the requirements for comprehensive community support services established in 908 KAR 2:250.

(r)1. Therapeutic rehabilitation program services shall be:

a. A rehabilitative service for an:

(i) Adult with a serious mental illness; or

(ii) Individual under the age of twenty-one (21) years who has a serious emotional disability; and

b. Designed to maximize the reduction of **the effects of** a mental health **disorder[disability]** and the restoration of the individual's functional level to the individual's best possible functional level.

2. A recipient in a therapeutic rehabilitation program shall establish the recipient's own rehabilitation goals within the person-centered service plan.

3. A therapeutic rehabilitation program shall:

a. Be delivered using a variety of psychiatric rehabilitation techniques;

b. Focus on:

(i) Improving daily living skills;

(ii) Self-monitoring of symptoms and side effects;

(iii) Emotional regulation skills;

(iv) Crisis coping skill; and

(v) Interpersonal skills; and

c. Be delivered individually or in a group.

(4)**[~~(a) The requirements established in 908 KAR 1:370 shall apply to any provider of a service to a recipient for a substance use disorder or co-occurring mental health disorder and substance use disorder.~~**

~~(b) The detoxification program requirements established in 908 KAR 1:370 shall apply to a provider of a detoxification service.~~

~~(5)~~] The extent and type of a screening shall depend upon the problem of the individual seeking or being referred for services.

(5)[~~(6)~~] A diagnosis or clinical impression shall be made using terminology established in the most current edition of the American Psychiatric Association Diagnostic and Statistical Manual of Mental Disorders.

(6)[~~(7)~~] The department shall not reimburse for a service billed by or on behalf of an entity or individual who is not a billing provider.

Section 4. Additional Limits and Non-covered Services or Activities. (1)(a) Except as established in paragraph (b) of this subsection, unless a diagnosis is made and documented in the recipient's medical record within three (3) visits, the service shall not be covered.

(b) The requirement established in paragraph (a) of this subsection shall not apply to:

1. Mobile crisis services;

2. Crisis intervention;

3. A screening; or

4. An assessment.

(2) For a recipient who is receiving residential services for substance use disorders, the following shall not be billed or reimbursed for the same date of service for the recipient:

(a) A screening;

(b) An assessment;

(c) Service planning;

(d) A psychiatric service;

(e) Individual outpatient therapy;

(f) Group outpatient therapy;

(g) Family outpatient therapy; or
(h) Peer support services.
(3) For a recipient who is receiving assertive community treatment, the following shall not be billed or reimbursed for the same date of service for the recipient:
(a) An assessment;
(b) Case management;
(c) Individual outpatient therapy;
(d) Group outpatient therapy;
(e) Peer support services; or
(f) Mobile crisis services.
(4) The department shall not reimburse for both a screening and ***an SBIRT[~~a screening, brief intervention, and referral to treatment for a substance use disorder~~]*** provided to a recipient on the same date of service.
(5) The following services or activities shall not be covered under this administrative regulation:
(a) A service provided to:
1. A resident of:
a. A nursing facility; or
b. An intermediate care facility for individuals with an intellectual disability;
2. An inmate of a federal, local, or state:
a. Jail;
b. Detention center; or
c. Prison; or
3. An individual with an intellectual disability without documentation of an additional psychiatric diagnosis;
(b) Psychiatric or psychological testing for another agency, including a court or school, that does not result in the individual receiving psychiatric intervention or behavioral health therapy from the behavioral health services organization;
(c) A consultation or educational service provided to a recipient or to others;
(d) A telephone call, an email, a text message, or other electronic contact that does not meet the requirements stated in the definition of "face-to-face" ***established in 907 KAR 15:005, Section 1(14)***;
(e) Travel time;
(f) A field trip;
(g) A recreational activity;
(h) A social activity; or
(i) A physical exercise activity group.
(6)(a) A consultation by one (1) provider or professional with another shall not be covered under this administrative regulation **except as established in Section 3(3)(l)1 of this administrative regulation**.
(b) A third party contract shall not be covered under this administrative regulation.
(7) A billing supervisor arrangement between a billing supervisor and a behavioral health practitioner under supervision shall not violate the supervision rules or policies of the respective professional licensure boards governing the billing supervisor and the behavioral health practitioner under supervision.

Section 5. No Duplication of Service. (1) The department shall not reimburse for a service provided to a recipient by more than one (1) provider, of any program in which the service is covered, during the same time period.
(2) For example, if a recipient is receiving a behavioral health service from an independent behavioral health provider, the department shall not reimburse for the same service provided to the same recipient during the same time period by a behavioral health services organization.

Section 6. Records Maintenance, Documentation, Protection, and Security. (1) A behavioral health services organization shall maintain a current health record for each recipient.
(2)(a) A health record shall document each service provided to the recipient including the date of the service and the signature of the individual who provided the service.
(b) The individual who provided the service shall date and sign the health record on the date that the individual provided the service **except as established in subsection (5)(a) of this section**.
(3) A health record shall:
(a) Include:
1. An identification and intake record including:
a. Name;
b. Social Security number;
c. Date of intake;
d. Home (legal) address;
e. Health insurance or Medicaid information;
f. Referral source and address of referral source;
g. Primary care physician and address;
h. The reason the individual is seeking help including the presenting problem and diagnosis;
i. Any physical health diagnosis, if a physical health diagnosis exists for the individual, and information regarding:
(i) Where the individual is receiving treatment for the physical health diagnosis; and
(ii) The physical health provider; and
j. The name of the informant and any other information deemed necessary by the behavioral health services organization to comply with the requirements of:
(i) This administrative regulation;
(ii) The behavioral health services organization's licensure board;
(iii) State law; or
(iv) Federal law;
2. Documentation of the:
a. Screening;
b. Assessment if an assessment was performed; **and**
c. Disposition if a disposition was performed;**[~~and~~**
~~d. Six (6) month review of a recipient's treatment plan each time a six (6) month review occurs;~~]
3. A complete history including mental status and previous treatment;
4. An identification sheet;
5. A consent for treatment sheet that is accurately signed and dated; and
6. The individual's stated purpose for seeking services; and
(b) Be:
1. Maintained in an organized central file;
2. Furnished to the:
a. Cabinet for Health and Family Services upon request; or
b. Managed care organization in which the recipient is enrolled upon request if the recipient is enrolled with a managed care organization;
3. Made available for inspection and copying by:
a. Cabinet for Health and Family Services' personnel; or
b. Personnel of the managed care organization in which the recipient is enrolled if the recipient is enrolled with a managed care organization;
4. Readily accessible; and
5. Adequate for the purpose of establishing the current treatment modality and progress of the recipient if the recipient received services beyond a screening.
(4) Documentation of a screening shall include:
(a) Information relative to the individual's stated request for services; and
(b) Other stated personal or health concerns if other concerns are stated.
(5)(a) A behavioral health services organization's notes regarding a recipient shall:
1. Be made within forty-eight (48) hours of each service visit; and
2. Describe the:
a. Recipient's symptoms or behavior, reaction to treatment, and attitude;
b. Therapist's intervention;
c. Changes in the**[~~treatment~~]** plan **of care** if changes are made; and
d. Need for continued treatment if continued treatment is needed.
(b)1. Any edit to notes shall:

a. Clearly display the changes; and

b. Be initialed and dated by the person who edited the notes.

2. Notes shall not be erased or illegibly marked out.

(c)1. Notes recorded by a ***behavioral health*** practitioner working under supervision shall be co-signed and dated by the supervising professional **within thirty (30) days**.

2. If services are provided by a ***behavioral health*** practitioner working under supervision, there shall be a monthly supervisory note recorded by the supervising professional reflecting consultations with the ***behavioral health*** practitioner working under supervision concerning the:

a. Case; and

b. Supervising professional's evaluation of the services being provided to the recipient.

(6) Immediately following a screening of a recipient, the practitioner shall perform a disposition related to:

(a) A provisional diagnosis;

(b) A referral for further consultation and disposition, if applicable; or

(c)1. If applicable, termination of services and referral to an outside source for further services; or

2. If applicable, termination of services without a referral to further services.

(7)**[~~(a) The treatment plan of a recipient who continues to receive services shall be reviewed at least once every six (6) months.~~**

~~(b)~~] Any change to a recipient's**[~~treatment~~]** plan **of care** shall be documented, signed, and dated by the rendering practitioner **and by the recipient or recipient's representative**.

(8)(a) Notes regarding services to a recipient shall:

1. Be organized in chronological order;

2. Be dated;

3. Be titled to indicate the service rendered;

4. State a starting and ending time for the service; and

5. Be recorded and signed by the rendering practitioner and include the professional title (for example, licensed clinical social worker) of the provider.

(b) Initials, typed signatures, or stamped signatures shall not be accepted.

(c) Telephone contacts, family collateral contacts not covered under this administrative regulation, or other non-reimbursable contacts shall:

1. Be recorded in the notes; and

2. Not be reimbursable.

(9)(a) A termination summary shall:

1. Be required, upon termination of services, for each recipient who received at least three (3) service visits; and

2. Contain a summary of the significant findings and events during the course of treatment including the:

a. Final assessment regarding the progress of the individual toward reaching goals and objectives established in the individual's**[~~treatment~~]** plan **of care**;

b. Final diagnosis of clinical impression; and

c. Individual's condition upon termination and disposition.

(b) A health record relating to an individual who terminated from receiving services shall be fully completed within ten (10) days following termination.

(10) If an individual's case is reopened within ninety (90) days of terminating services for the same or related issue, a reference to the prior case history with a note regarding the interval period shall be acceptable.

(11)**(a) Except as established in paragraph (b) of this subsection,** if a recipient is transferred or referred to a health care facility or other provider for care or treatment, the transferring behavioral health services organization shall, within ten (10) business days of the transfer or referral, transfer the recipient's records in a manner that complies with the records' use and disclosure requirements as established in or required by:

1.a.[~~(a)1.~~] The Health Insurance Portability and Accountability Act;

b.[~~2.~~] 42 U.S.C. 1320d-2 to 1320d-8; and

c.[~~3.~~] 45 C.F.R. Parts 160 and 164; or

2.a.[~~(b)1.~~] 42 U.S.C. 290 ee-3; and

b.[~~2.~~] 42 C.F.R. Part 2.

(b) If a recipient is transferred or referred to a residential crisis stabilization unit, a psychiatric hospital, a psychiatric distinct part unit in an acute care hospital, or an acute care hospital for care or treatment, the transferring behavioral health services organization shall, within forty-eight (48) hours of the transfer or referral, transfer the recipient's records in a manner that complies with the records' use and disclosure requirements as established in or required by:

1.a. The Health Insurance Portability and Accountability Act;

b. 42 U.S.C. 1320d-2 to 1320d-8; and

c. 45 C.F.R. Parts 160 and 164; or

2.a. 42 U.S.C. 290 ee-3; and

b. 42 C.F.R Part 2.

(12)(a) If a behavioral health services organization's Medicaid Program participation status changes as a result of voluntarily terminating from the Medicaid Program, involuntarily terminating from the Medicaid Program, a licensure suspension, or death of an owner or deaths of owners, the health records of the behavioral health services organization shall:

1. Remain the property of the behavioral health services organization; and

2. Be subject to the retention requirements established in subsection (13) of this section.

(b) A behavioral health services organization shall have a written plan addressing how to maintain health records in the event of death of an owner or deaths of owners.

(13)(a) Except as established in paragraph (b) or (c) of this subsection, a **behavioral health[~~targeted case management~~]** ***services[~~service~~]*** **organization** shall maintain a case record regarding a recipient for at least six (6) years from the date of the service or until any audit dispute or issue is resolved beyond six (6) years.

(b) After a recipient's death or discharge from services, a provider shall maintain the recipient's record for the longest of the following periods:

1. Six (6) years unless the recipient is a minor; or

2. If the recipient is a minor, three (3) years after the recipient reaches the age of majority under state law.

(c) If the Secretary of the United States Department of Health and Human Services requires a longer document retention period than the period referenced in paragraph (a) of this section, pursuant to 42 C.F.R. 431.17, the period established by the secretary shall be the required period.

(14)(a) A behavioral health services organization shall comply with 45 C.F.R. ***Part[~~Chapter~~]*** 164.

(b) All information contained in a health record shall:

1. Be treated as confidential;

2. Not be disclosed to an unauthorized individual; and

3. Be disclosed to an authorized representative of:

a. The department; or

b. Federal government.

(c)1. Upon request, a behavioral health services organization shall provide to an authorized representative of the department or federal government information requested to substantiate:

a. Staff notes detailing a service that was rendered;

b. The professional who rendered a service; and

c. The type of service rendered and any other requested information necessary to determine, on an individual basis, whether the service is reimbursable by the department.

2. Failure to provide information ***required by[~~referenced in~~]*** subparagraph 1 of this paragraph shall result in denial of payment for any service associated with the requested information.

Section 7. Medicaid Program Participation Compliance. (1) A behavioral health services organization shall comply with:

(a) 907 KAR 1:671;

(b) 907 KAR 1:672; and

(c) All applicable state and federal laws.

(2)(a) If a behavioral health services organization receives any duplicate payment or overpayment from the department, regardless of reason, the behavioral health services organization

shall return the payment to the department.

(b) Failure to return a payment to the department in accordance with paragraph (a) of this section may be:

1. Interpreted to be fraud or abuse; and

2. Prosecuted in accordance with applicable federal or state law.

(3)(a) When the department makes payment for a covered service and the behavioral health services organization accepts the payment:

1. The payment shall be considered payment in full;

2. A bill for the same service shall not be given to the recipient; and

3. Payment from the recipient for the same service shall not be accepted by the behavioral health services organization.

(b)1. A behavioral health services organization may bill a recipient for a service that is not covered by the Kentucky Medicaid Program if the:

a. Recipient requests the service; and

b. Behavioral health services organization makes the recipient aware in advance of providing the service that the:

(i) Recipient is liable for the payment; and

(ii) Department is not covering the service.

2. If a recipient makes payment for a service in accordance with subparagraph 1 of this paragraph, the:

a. Behavioral health services organization shall not bill the department for the service; and

b. Department shall not:

(i) Be liable for any part of the payment associated with the service; and

(ii) Make any payment to the behavioral health services organization regarding the service.

(4)(a) A behavioral health services organization shall attest by the behavioral health services organization's staff's or representative's signature that any claim associated with a service is valid and submitted in good faith.

(b) Any claim and substantiating record associated with a service shall be subject to audit by the:

1. Department or its designee;

2. Cabinet for Health and Family Services, Office of Inspector General, or its designee;

3. Kentucky Office of Attorney General or its designee;

4. Kentucky Office of the Auditor for Public Accounts or its designee; or

5. United States General Accounting Office or its designee.

(c) If a behavioral health services organization receives a request from the department to provide a claim, related information, related documentation, or record for auditing purposes, the behavioral health services organization shall provide the requested information to the department within the timeframe requested by the department.

(d)1. All services provided shall be subject to review for recipient or provider abuse.

2. Willful abuse by a behavioral health services organization shall result in the suspension or termination of the behavioral health services organization from Medicaid Program participation.

Section 8. Third Party Liability. A behavioral health services organization shall comply with KRS 205.622.

Section 9. Use of Electronic Signatures. (1) The creation, transmission, storage, and other use of electronic signatures and documents shall comply with the requirements established in KRS 369.101 to 369.120.

(2) A behavioral health services organization that chooses to use electronic signatures shall:

(a) Develop and implement a written security policy that shall:

1. Be adhered to by each of the behavioral health services organization's employees, officers, agents, or contractors;

2. Identify each electronic signature for which an individual has access; and

3. Ensure that each electronic signature is created, transmitted, and stored in a secure fashion;

(b) Develop a consent form that shall:

1. Be completed and executed by each individual using an electronic signature;

2. Attest to the signature's authenticity; and

3. Include a statement indicating that the individual has been notified of his or her responsibility in allowing the use of the electronic signature; and

(c) Provide the department, immediately upon request, with:

1. A copy of the behavioral health services organization's electronic signature policy;

2. The signed consent form; and

3. The original filed signature.

Section 10. Auditing Authority. The department shall have the authority to audit any:

(1) Claim;

(2) Medical record; or

(3) Documentation associated with any claim or medical record.

Section 11. Federal Approval and Federal Financial Participation. The department's coverage of services pursuant to this administrative regulation shall be contingent upon:

(1) Receipt of federal financial participation for the coverage; and

(2) Centers for Medicare and Medicaid Services' approval for the coverage.

Section 12. Appeals. (1) An appeal of an adverse action by the department regarding a service and a recipient who is not enrolled with a managed care organization shall be in accordance with 907 KAR 1:563.

(2) An appeal of an adverse action by a managed care organization regarding a service and an enrollee shall be in accordance with 907 KAR 17:010.

LAWRENCE KISSNER, Commissioner
AUDREY TAYSE HAYNES, Secretary

APPROVED BY AGENCY: November 12, 2014

FILED WITH LRC: November 13, 2014 at 2 p.m.

CONTACT PERSON: Tricia Orme, tricia.orme@ky.gov, Office of Legal Services, 275 East Main Street 5 W-B, Frankfort, Kentucky 40601, phone (502) 564-7905, fax (502) 564-7573.

CABINET FOR HEALTH AND FAMILY SERVICES
Department for Medicaid Services
Division of Policy and Operations
(As Amended at ARRS, December 9, 2014)

907 KAR 15:025. Reimbursement provisions and requirements regarding behavioral health services provided by behavioral health *services[~~service~~]* organizations.

RELATES TO: KRS 205.520, 42 U.S.C. 1396a(a)(10)(B), 42 U.S.C. 1396a(a)(23)

STATUTORY AUTHORITY: KRS 194A.030(2), 194A.050(1), 205.520(3)

NECESSITY, FUNCTION, AND CONFORMITY: The Cabinet for Health and Family Services, Department for Medicaid Services, has a responsibility to administer the Medicaid Program. KRS 205.520(3) authorizes the cabinet, by administrative regulation, to comply with any requirement that may be imposed or opportunity presented by federal law to qualify for federal Medicaid funds. This administrative regulation establishes the reimbursement provisions and requirements regarding Medicaid Program behavioral health services provided by behavioral health ***services[~~service~~]*** organizations to Medicaid recipients who are not enrolled with a managed care organization.

Section 1. General Requirements. For the department to reimburse for a service covered under this administrative regulation, the service shall***[~~be~~]***:

(1) ***Meet the requirements established in 907 KAR 15:020;***

and

(2) Be[medically necessary;

(2) Provided:

(a) To a recipient;

(b) By a behavioral health service organization that meets the provider participation requirements established in 907 KAR 15:020; and

(c) In accordance with the requirements established in 907 KAR 15:020; and

(3)] covered in accordance with 907 KAR 15:020.

Section 2. Reimbursement. (1) One (1) unit of service shall be:

(a) Fifteen (15) minutes in length; or

(b) The unit amount identified in the corresponding:

1. Current procedural terminology code; or

2. Healthcare common procedure coding system code.

(2) The rate per unit for a screening or for crisis intervention shall be:

(a) Seventy-five (75) percent of the rate on the Kentucky-specific Medicare Physician Fee Schedule for the service if provided by a:

1. Physician; or

2. Psychiatrist;

(b) 63.75 percent of the rate on the Kentucky-specific Medicare Physician Fee Schedule for the service if provided by:

1. An advanced practice registered nurse; or

2. A licensed psychologist;

(c) Sixty (60) percent of the rate on the Kentucky-specific Medicare Physician Fee Schedule for the service if provided by a:

1. Licensed professional clinical counselor;

2. Licensed clinical social worker;

3. Licensed psychological practitioner;

4. Licensed marriage and family therapist; or

5. Licensed professional art therapist; or

(d) Fifty-two and five-tenths (52.5) percent of the rate on the Kentucky-specific Medicare Physician Fee Schedule for the service if provided by a:

1. Marriage and family therapy associate working under the supervision of a billing supervisor;

2. Licensed professional counselor associate working under the supervision of a billing supervisor;

3. Licensed psychological associate working under the supervision of a billing supervisor;

4. Certified social worker working under the supervision of a billing supervisor;

5. Physician assistant working under the supervision of a billing supervisor;

6. Licensed professional art therapist associate working under the supervision of a billing supervisor; or

7. Certified alcohol and drug counselor working under the supervision of a billing supervisor.

(3) The rate per unit for an assessment shall be:

(a) Seventy-five (75) percent of the rate on the Kentucky-specific Medicare Physician Fee Schedule for the service if provided by a:

1. Physician; or

2. Psychiatrist;

(b) 63.75 percent of the rate on the Kentucky-specific Medicare Physician Fee Schedule for the service if provided by:

1. An advanced practice registered nurse; or

2. A licensed psychologist;

(c) Sixty (60) percent of the rate on the Kentucky-specific Medicare Physician Fee Schedule for the service if provided by a:

1. Licensed professional clinical counselor;

2. Licensed clinical social worker;

3. Licensed psychological practitioner;

4. Licensed marriage and family therapist;

5. Licensed professional art therapist; or

6. Licensed behavior analyst; or

(d) Fifty-two and five-tenths (52.5) percent of the rate on the Kentucky-specific Medicare Physician Fee Schedule for the service if provided by a:

1. Marriage and family therapy associate working under the supervision of a billing supervisor;

2. Licensed professional counselor associate working under the supervision of a billing supervisor;

3. Licensed psychological associate working under the supervision of a billing supervisor;

4. Certified social worker working under the supervision of a billing supervisor;

5. Physician assistant working under the supervision of a billing supervisor;

6. Licensed professional art therapist associate working under the supervision of a billing supervisor;**[~~or~~]**

7. Licensed assistant behavior analyst working under the supervision of a billing supervisor**; or**

8. Certified alcohol and drug counselor working under the supervision of a billing supervisor.

(4) The rate per unit for psychological testing shall be:

(a) 63.75 percent of the rate on the Kentucky-specific Medicare Physician Fee Schedule for the service if provided by a licensed psychologist;

(b) Sixty (60) percent of the rate on the Kentucky-specific Medicare Physician Fee Schedule for the service if provided by a licensed psychological practitioner; or

(c) Fifty-two and five-tenths (52.5) percent of the rate on the Kentucky-specific Medicare Physician Fee Schedule for the service if provided by a licensed psychological associate working under the supervision of a licensed psychologist.

(5) The rate per unit for individual outpatient therapy, group outpatient therapy, or collateral outpatient therapy shall be:

(a) Seventy-five (75) percent of the rate on the Kentucky-specific Medicare Physician Fee Schedule for the service if provided by a:

1. Physician; or

2. Psychiatrist;

(b) 63.75 percent of the rate on the Kentucky-specific Medicare Physician Fee Schedule for the service if provided by:

1. An advanced practice registered nurse; or

2. A licensed psychologist;

(c) Sixty (60) percent of the rate on the Kentucky-specific Medicare Physician Fee Schedule for the service if provided by a:

1. Licensed professional clinical counselor;

2. Licensed clinical social worker;

3. Licensed psychological practitioner;

4. Licensed marriage and family therapist;

5. Licensed professional art therapist; or

6. Licensed behavior analyst; or

(d) Fifty-two and five-tenths (52.5) percent of the rate on the Kentucky-specific Medicare Physician Fee Schedule for the service if provided by a:

1. Marriage and family therapy associate working under the supervision of a billing supervisor;

2. Licensed professional counselor associate working under the supervision of a billing supervisor;

3. Licensed psychological associate working under the supervision of a billing supervisor;

4. Certified social worker working under the supervision of a billing supervisor;

5. Physician assistant working under the supervision of a billing supervisor;

6. Licensed professional art therapist associate working under the supervision of a billing supervisor;**[~~or~~]**

7. Licensed assistant behavior analyst working under the supervision of a billing supervisor**; or**

8. Certified alcohol and drug counselor working under the supervision of a billing supervisor.

(6) The rate per unit for family outpatient therapy shall be:

(a) Seventy-five (75) percent of the rate on the Kentucky-specific Medicare Physician Fee Schedule for the service if provided by a:

1. Physician; or

2. Psychiatrist;

(b) 63.75 percent of the rate on the Kentucky-specific Medicare Physician Fee Schedule for the service if provided by:

1. An advanced practice registered nurse; or

2. A licensed psychologist;

(c) Sixty (60) percent of the rate on the Kentucky-specific Medicare Physician Fee Schedule for the service if provided by a:

1. Licensed professional clinical counselor;

2. Licensed clinical social worker;

3. Licensed psychological practitioner;

4. Licensed marriage and family therapist; or

5. Licensed professional art therapist; or

(d) Fifty-two and five-tenths (52.5) percent of the rate on the Kentucky-specific Medicare Physician Fee Schedule for the service if provided by a:

1. Marriage and family therapy associate working under the supervision of a billing supervisor;

2. Licensed professional counselor associate working under the supervision of a billing supervisor;

3. Licensed psychological associate working under the supervision of a billing supervisor;

4. Certified social worker working under the supervision of a billing supervisor;

5. Physician assistant working under the supervision of a billing supervisor;**[~~or~~]**

6. Licensed professional art therapist associate working under the supervision of a billing supervisor**; or**

7. Certified alcohol and drug counselor working under the supervision of a billing supervisor.

(7) Reimbursement for the following services shall be as established on the BHSO Non-Medicare Services Fee Schedule:

(a) Mobile crisis services;

(b) Day treatment;

(c) Peer support services;

(d) Parent or family peer support services;

(e) Intensive outpatient program services;

(f) Service planning;

(g) Residential services for substance use disorders;

(h) Screening, brief intervention, and referral to treatment;

(i) Assertive community treatment;

(j) Comprehensive community support services; or

(k) Therapeutic rehabilitation services.

(8)(a) The department shall use the current version of the Kentucky-specific Medicare Physician Fee Schedule for reimbursement purposes.

(b) For example, if the Kentucky-specific Medicare Physician Fee Schedule currently published and used by the Centers for Medicare and Medicaid Services for the Medicare Program is:

1. An interim version, the department shall use the interim version until the final version has been published; or

2. A final version, the department shall use the final version.

(9) The department shall not reimburse for a service billed by or on behalf of an entity or individual that is not a billing provider.

Section 3. No Duplication of Service. (1) The department shall not reimburse for a service provided to a recipient by more than one (1) provider of any program in which the service is covered during the same time period.

(2) For example, if a recipient is receiving a behavioral health service from an independent behavioral health provider, the department shall not reimburse for the same service provided to the same recipient during the same time period by a behavioral health services organization.

Section 4. Not Applicable to Managed Care Organizations. A managed care organization shall not be required to reimburse in accordance with this administrative regulation for a service covered pursuant to:

(1) 907 KAR 15:020; and

(2) This administrative regulation.

Section 5. Federal Approval and Federal Financial Participation. The department's reimbursement for services pursuant to this administrative regulation shall be contingent upon:

(1) Receipt of federal financial participation for the reimbursement; and

(2) Centers for Medicare and Medicaid Services' approval for the reimbursement.

Section 6. Incorporation by Reference. (1) "BHSO Non-Medicare Services Fee Schedule", July 2014, is incorporated by reference.

(2) This material may be inspected, copied, or obtained, subject to applicable copyright law, at:

(a) The Department for Medicaid Services, 275 East Main Street, Frankfort, Kentucky, Monday through Friday, 8:00 a.m. to 4:30 p.m.; or

(b) Online at the department's Web site at http://www.chfs.ky.gov/dms/incorporated.htm.

LAWRENCE KISSNER, Commissioner
AUDREY TAYSE HAYNES, Secretary

APPROVED BY AGENCY: November 12, 2014

FILED WITH LRC: November 13, 2014 at 2 p.m.

CONTACT PERSON: Tricia Orme, tricia.orme@ky.gov, Office of Legal Services, 275 East Main Street 5 W-B, Frankfort, Kentucky 40601, phone (502) 564-7905, fax (502) 564-7573.

CABINET FOR HEALTH AND FAMILY SERVICES
Commission for Children with Special Health Care Needs
Division of Clinical and Augmentative Services
(As Amended at ARRS, December 9, 2014)

911 KAR 1:085. Early Hearing Detection and Intervention Program.

RELATES TO: KRS ***13B.050,*** 194A.030(5), 200.460-200.499, ***211.645(5),*** 211.647, 213.046(16), 216.2970***, 334A***

STATUTORY AUTHORITY: KRS 194A.030(5), 194A.050(1), 211.647(3),***[211.647(4),]*** 216.2970(1)

NECESSITY, FUNCTION, AND CONFORMITY: ***KRS 194A.050(1) requires the secretary of the Cabinet for Health and Family Services to promulgate administrative regulations necessary to operate the programs and fulfill the responsibilities vested in the cabinet, to implement programs mandated by federal law, or to qualify for federal funds.*** KRS 211.647***(3)*** requires the Commission for Children with Special Health Care Needs to identify and refer for treatment infants at risk for hearing loss and establish standards for infant audiological assessment and diagnostic centers. KRS 216.2970(1) requires the ***commission to promulgate administrative regulations establishing approved[Commission for Children with Special Health Care Needs to approve]*** methods for auditory screening for all infants born in hospitals offering obstetric services and alternative birthing centers with at least forty (40) births per year. This administrative regulation establishes standards, eligibility criteria, application processes, reporting requirements, and appeal rights for entities seeking designation as approved infant audiological assessment and diagnostic centers, and identifies approved methods for auditory screening for newborn infants in hospitals and alternative birthing centers.

Section 1. Definitions. (1) "AAA Guidelines" means the "Audiologic Guidelines for the Assessment of Infants and Young Children" published by the American Academy of Audiology.

(2) "ASHA Guidelines" means the "Guidelines for the Audiologic Assessment of Children From Birth to 5 Years of Age", published by the American Speech-Language-Hearing Association[~~, and incorporated by reference~~].

(3)[~~(2)~~] "Audiologist" is defined by KRS 334A.020(5).

(4)[~~(3)~~] "Audiology extern" means a student engaged in the clinical experience component of an audiology doctoral degree program.

(5)[~~(4)~~] "Auditory brainstem response" or "ABR" means an objective electrophysiologic measurement of the brainstem's response to the ear when stimulated with a click sound or tone burst.

(6)[~~(5)~~] "Automated auditory brainstem response" or "AABR" means an automatic ABR resulting in a pass/refer outcome.

(7)[~~(6)~~] "Commission" is defined by KRS 211.645(2).

(8)[~~(7)~~] "JCIH Guidelines" means the "Year 2007 Position Statement: Principles and Guidelines for Early Hearing Detection and Intervention Programs", published by the Joint Committee on Infant Hearing[~~, and incorporated by reference~~].

(9)[~~(8)~~] "Otoacoustic emissions" means an objective physiological test method for measuring responses elicited directly from the cochlea.

Section 2. Eligibility Criteria for Centers. (1) In order to be eligible for designation as a Level 1 infant audiological assessment and diagnostic center, an entity located in Kentucky shall:

(a) Employ at least one (1) audiologist who:

1. Is currently licensed pursuant to KRS Chapter 334A;

2. Has experience testing children in the age range newborn to three (3) years; and

3.a. Performs all evaluations; or

b. Directly supervises audiology externs performing evaluations;

(b) Possess the capacity to complete the following tests:

1. Otoscopic examination;

2. Tympanometry;

3. Ipsilateral acoustic reflex measurement;

4. Contralateral acoustic reflex measurement;

5. Ear-specific behavioral observation audiometry;

6. Speech awareness threshold;

7. Speech recognition or reception threshold;

8. Play audiometry; and

9. Either:

a. Otoacoustic emissions with diagnostic or screening capabilities; or

b. ABR screening[~~with threshold information~~];

(c) Annually calibrate all measuring and testing equipment; and

(d) Submit a complete application and assurance packet in accordance with Section 3 of this administrative regulation.

(2) In order to be eligible for designation as a Level 2 infant audiological assessment and diagnostic center, an entity located in Kentucky shall:

(a) Meet the requirements specified in subsection (1) of this section; and

(b) Possess the capacity to complete:

1. Otoacoustic emissions with diagnostic or screening capabilities;

2. Frequency-specific ABR;

3. Bone conduction ABR; and

4. Real ear measures.

Section 3. Application Process. (1) An entity seeking designation as an infant audiological assessment and diagnostic center shall submit to the commission a completed application packet containing:

(a) Completed and signed form CCSHCN-E106, Potential Infant Audiological Assessment and Diagnostic Center Questionnaire;

(b) Copies of current professional licenses for audiologists performing evaluations;

(c) Copies of current calibration certificates for audiological testing equipment; and

(d) Copies of policies and procedures for tests and measures requested on the CCSHCN-E106, Potential Infant Audiological Assessment and Diagnostic Center Questionnaire.

(2) The commission shall review an entity's application within thirty (30) calendar days of receiving a complete packet submitted in accordance with subsection (1) of this section.

(3) Upon review of an entity's application packet, the commission's executive director or designee shall approve the entity as a Level 1 Infant Audiological Assessment and Diagnostic Center if:

(a) The entity meets the requirements specified in Section 2(1) of this administrative regulation; and

(b) The commission determines that the entity's policies and procedures conform to best practice standards as described in[~~ASHA Guidelines and~~] JCIH Guidelines***[;]*** and***:***

1. AAA Guidelines; or

2. ASHA Guidelines.

(4) Upon review of an entity's application packet, the commission's executive director or designee shall approve the entity as a Level 2 Infant Audiological Assessment and Diagnostic Center if:

(a) The entity meets the requirements specified in Section 2(2) of this administrative regulation; and

(b) The commission determines that the entity's policies and procedures conform to best practice standards as described in[~~ASHA Guidelines and~~] JCIH Guidelines***[;]*** and***:***

1. AAA Guidelines; or

2. ASHA Guidelines.

(5) If the commission's executive director or designee determines that the entity does not meet the requirements specified in Section 2 of this administrative regulation, the Commission shall:

(a) Advise the entity and request clarifying information; or

(b) Deny the designation as an Infant Audiological Assessment and Diagnostic Center and notify the entity of appeal rights pursuant to Section 8 of this administrative regulation.

(6) Approvals shall expire on December 31 of odd-numbered years. All entities seeking continued approval shall re-apply by December 1 of that year in accordance with this section.

Section 4. Publication of Approved List. (1) ***In accordance with KRS 211.647,*** the Commission shall maintain a current listing of all approved Infant Audiological Assessment and Diagnostic Centers, with contact information.

(2) The Commission shall make the listing public through the following methods:

(a) Posting on its agency Web site***, http://chfs.ky.gov/ccshcn***;

(b) Providing to the Cabinet for Health and Family Services, Office of Administrative and Technology Services, for inclusion on the KY-CHILD electronic information system used by birthing hospitals and centers;

(c) Enclosing as an attachment to correspondence with parents; and

(d) Mailing a listing to birthing hospitals and centers upon request.

Section 5. Removal from Approved List and Updates Required. (1) The commission shall remove an entity from the approved list and notify the entity of the removal if the entity requests removal.

(2) If the commission receives a complaint that an entity no longer meets the requirements of Section 2 of this administrative regulation, the commission shall:

(a) Advise the entity of the complaint;

(b) Request clarifying information from the entity;

(c) Review any information received; and

(d) Determine whether the entity meets the eligibility requirements of Section 2 of this administrative regulation.

(3) If the commission determines that the entity no longer meets the eligibility requirements, the commission shall:

(a) Notify the entity of appeal rights pursuant to Section 8 of this administrative regulation; and

(b) Remove the entity from the approved list.

(4) Following approval, an Infant Audiological Assessment and Diagnostic Center shall provide documentation via form CCSHCN-E107, Infant Audiological Assessment and Diagnostic Center Program Modification, if the following changes in circumstances occur:

(a) Employment or termination of employment of an audiologist;

(b) Change in licensure status of an audiologist;

(c) Relocation of agency or addition of a location; or

(d) Modification to policy or procedure with regard to evaluations described in Section 2 of this administrative regulation.

Section 6. Reporting Requirements. (1) Upon completion of diagnostic testing of an infant or child aged birth to three (3) years described in KRS 211.647(5), an approved Infant Audiological

Assessment and Diagnostic Center shall report to the commission:

(a) Identifying and demographic information;

(b)[~~Results of the newborn hearing screening;(c)~~] Results of the follow-up audiological evaluation; and

(c)[~~(d)~~] Documentation of the referral required by KRS 211.647(5).

(2) An approved Infant Audiological Assessment and Diagnostic Center shall[~~may~~] submit information specified in subsection (1) of this section[~~by one (1) of the following methods: (a)~~] electronically via the KY-CHILD electronic information system within seven (7) calendar days of evaluation.

(3) Scheduled appointments which are not kept by families shall be marked in the KY-CHILD electronic information system as no-show within four (4) calendar days if not rescheduled[~~; or~~

~~(b) Mailing or faxing the completed form CCSHCN-E3, Audiology Update Form~~].

Section 7. Resource and Informational Materials. The commission shall make available to families of all newborns and children ages birth to three (3) years identified as having permanent hearing loss information provided by the Kentucky Commission on the Deaf and Hard of Hearing.

Section 8. Appeal Rights. An entity denied designation as an Infant Audiological Assessment and Diagnostic Center or which has been removed from the approved list may request an administrative hearing in accordance with KRS 13B.050.

Section 9. Approved Methods of Auditory Screening for Newborn Infants and Children Ages Birth to Three (3) Years. (1) Auditory screenings pursuant to KRS 216.2970(1) shall include at least one (1) of the following physiological tests:

(a)[~~ABR;~~

~~(b)~~] AABR; or

(b)[~~(c)~~] Otoacoustic emissions.

(2) Auditory screening reports shall:

(a) Document the results of physiological tests conducted;

(b) Document the presence of any risk factors pursuant to KRS 211.645(5); and

(c) Be submitted via the KY-CHILD electronic information system.

Section 10. Incorporation by Reference. (1) The following material is incorporated by reference:

(a) "Audiologic Guidelines for the Assessment of Infants and Young Children", American Academy of Audiology, August 2012[~~CCSHCN-E3, Audiology Update Form, edition 2009~~];

(b) "CCSHCN-E106, Potential Infant Audiological Assessment and Diagnostic Center Questionnaire", [~~edition~~] 2009;

(c) "CCSHCN-E107, Infant Audiological Assessment and Diagnostic Center Program Modification", [~~edition~~] 2009;

(d) "Guidelines for the Audiologic Assessment of Children From Birth to 5 Years of Age", ***2004*** American Speech-Language-Hearing Association; and

(e) "Year 2007 Position Statement: Principles and Guidelines for Early Hearing Detection and Intervention Programs", ***2007*** Joint Committee on Infant Hearing.

(2) This material may be inspected, copied, or obtained, subject to applicable copyright law, at the Commission for Children with Special Health Care Needs, 310 Whittington Parkway, Suite 200, Louisville, Kentucky 40222, Monday through Friday, 8 a.m. to 4:30 p.m.

JACKIE RICHARDSON, Executive Director
AUDREY TAYSE HAYNES, Secretary

APPROVED BY AGENCY: October 8, 2014

FILED WITH LRC: October 9, 2014 at 1 p.m.

CONTACT PERSON: Tricia Orme, Office of Legal Services, 275 East Main Street 5 W-B, Frankfort, Kentucky 40621, phone 502-564-7905, fax 502-564-7573, email tricia.orme@ky.gov

CABINET FOR HEALTH AND FAMILY SERVICES
Department for Community Based Services
Division of Protection and Permanency
(As Amended at ARRS, December 9, 2014)

922 KAR 1:360. Private child care placement, levels of care, and payment.

RELATES TO: KRS***[Chapter]*** 13B, 199.011, 199.640-199.680, 199.801, 600.020(24)[~~(23)~~], 605.090(1)(b), (d), 610.110, 2014 Ky. Acts ch. 117 Part 1, G. 9(7)[~~2008 Acts ch. 127 Part 1, H.10(3)~~], 42 U.S.C. 622, 672

STATUTORY AUTHORITY: KRS 194A.050(1), 199.641(4), 605.090(1)(d), 605.150(1)

NECESSITY, FUNCTION, AND CONFORMITY: KRS 194A.050(1) requires the secretary of the Cabinet for Health and Family Services to promulgate administrative regulations necessary to operate programs and fulfill the responsibilities vested in the cabinet. KRS 199.641(4) requires the cabinet to establish the rate setting methodology and the rate of payment for nonprofit child-caring facilities, consistent with the level and quality of service provided. KRS 605.090(1)(d) authorizes the cabinet to ***promulgate administrative regulations prescribing conditions under which the cabinet may*** place a child committed to the Department of Juvenile Justice, or the cabinet, in a child-caring facility operated by a local governmental unit or private organization willing to receive the child, upon such conditions as the cabinet may prescribe. KRS 605.150(1) authorizes the cabinet to promulgate administrative regulations to implement the provisions of KRS Chapter 605. This administrative regulation establishes: (a) five (5) levels of care based upon the needs of a child for whom the cabinet has legal responsibility; (b) a payment rate for each level; (c) gatekeeper responsibilities; (d) provider requirements; (e) procedures for classification at the appropriate level of care; and (f) procedures for determination of components of the model program cost analysis.

Section 1. Definitions. (1) "Cabinet" is defined by KRS 199.011(2).

(2) "Child-caring facility" or "facility" is defined by KRS 199.641(1)(b).

(3) "Department" means the Department for Community Based Services or the department's agent.

(4) "District placement coordinator" means an individual whose responsibilities are described in KRS 199.801.

(5) "Emergency shelter" is defined by KRS 600.020(24)[~~(23)~~].

(6) "Gatekeeper" means the department or agent responsible for:

(a) Making a clinical determination of the level of care necessary to meet a child's treatment and service needs; and

(b) Other administrative duties in the areas of:

1. Assessment;
2. Placement;
3. Performance measurement; and
4. Consultation regarding children and their needs.

(7) "Index factor" means a specific number derived from time-study data, used to determine payment for each level of care.

(8) "Initial level of care" means a level of care:

(a) Assigned by the gatekeeper to a child at the point of entry into the level of care system; and

(b) That is time-limited and effective for the first six (6) months of a child's placement.

(9) "Level of care" means one (1) of five (5) standards representing the treatment and service needs of a child placed by the cabinet in out-of-home care.

(10) "Level of care packet" means an assessment conducted by designated cabinet staff***[,]*** and a collection of forms required for submission to the gatekeeper for the purpose of determining the appropriate level of care in accordance with Section 2(2) of this administrative regulation[~~, which includes the following:~~

~~(a) DPP-886, Private Child Care Client Inter-agency Referral Form;~~

~~(b) DPP-886A, Application for Referral and Needs~~

~~Assessment; and~~

~~(c) If a child has an IQ of seventy (70) or above:~~

~~1. Child Behavior Checklist For Ages 1 1/2-5 (Achenbach); or~~

~~2. Child Behavior Checklist For Ages 6-18; (Achenbach)~~].

(11) "Model program cost analysis" is defined by KRS 199.641(1)(d).

(12) "Reassigned level of care" means a level of care that is:

(a) Determined by the gatekeeper after a child's level of care expires; and

(b) Authorized for a specific period of time.

(13) "Time study" is defined by KRS 199.641(1)(e).

(14) "Utilization review" means a gatekeeper's examination, during a child's placement in a child-caring facility or child-placing agency, of the child's case record and existing documentation for the purpose of:

(a) Identifying the child's current level of functioning; and

(b) Assigning the appropriate level of care.

Section 2. Referral Process for Level of Care System Placement. (1) A level of care packet shall be completed by a cabinet staff person and submitted to the gatekeeper for a child at least forty-eight (48) months of age ***when[~~at the time that~~]***:

(a) The child enters the level of care system;

(b) A child currently placed in a child-caring facility or a child-placing agency reaches forty-eight (48) months of age; or

(c) A child's level of care expires and assignment of a new level is necessary.

(2) A level of care packet shall include the DPP-886, Private Child Care Client Inter-agency Referral Form, and the following child-specific information:

(a) Identifying data;

(b) Individual strengths and limitations;

(c) Daily living skills;

(d) Physical health needs;

(e) Mental health needs including:

1. Behavioral health; and

2. Diagnosis and treatment;

(f) Medications;

(g) History of substance abuse, high risk, or other significant behavior including:

1. Sexual acting out; ***and***

2. Legal history, status, or delinquency behavior patterns;

(h) Out of home care placement information including:

1. Reason for entering out of home care;

2. History of abuse, neglect, or dependency;

3. Current custody status;

4. Current and previous placements; and

5. Permanency goal;

(i) Social supports;

(j) **Educational functioning, grade level, and any special educational need[~~Education~~]**;

(k) Religious background and practices; and

(l) If a child has an IQ of seventy (70) or above:

1. Child Behavior Checklist For Ages 1 1/2-5 (Achenbach);

2. Child Behavior Checklist For Ages 6-18 (Achenbach); or

3. Another tool identified and piloted pursuant to the Promoting Wellbeing and Adoption after Trauma Grant in accordance with 42 U.S.C. 622(b)(15)(A).

(3)(a) **If a child needs placement within the level of care system[~~Upon assignment of an initial level of care by the gatekeeper~~]**, a cabinet staff person shall submit a copy of the completed level of care packet, including level assignment, to the district placement coordinator.

(b) The district placement coordinator shall forward the level of care packet to potential child-caring facilities or child-placing agencies.

(4)[~~(3)~~] If a child-caring facility or child-placing agency accepts a child for out-of-home placement and the cabinet approves the placement, a cabinet staff person shall:

(a) Complete the DPP-114, Level of Care Schedule, with the level of care payment rate:

1. As assigned by the gatekeeper within the previous six (6) months; or

2. ***If there is[~~In the event of~~]*** an emergency placement, within two (2) business days of the placement **or receipt of the assigned level of care**;**[~~and~~]**

(b) Arrange transportation for the child to the placement**; and**

(c) Notify the district placement coordinator of the selected placement.

(5) If a child-caring facility or child-placing agency accepts an emergency placement requested by the cabinet outside of the gatekeeper's regular working hours, a cabinet staff person shall:

(a) Submit a level of care packet to the gatekeeper for a child who does not have a current level of care assignment; and

(b) Inform the district placement coordinator of the location and date of placement.

(6) The district placement coordinator shall notify a child-caring facility or child-placing agency that was not chosen for placement upon provision of notification in accordance with subsection (4)(c) of this section.

Section 3. Gatekeeper Responsibilities. The gatekeeper shall:

(1) Evaluate a child forty-eight (48) months of age or older:

(a) Who is referred by the department or currently placed in a child-caring facility or child-placing agency; and

(b) For an initial or reassigned level of care;

(2) Within three (3) working days of receipt of the level of care packet:

(a) Determine the appropriate level of care according to a needs assessment consistent with one (1) of the five (5) levels of care; and

(b) Return the completed**:**

1. DPP-886, Private Child Care Client Inter-agency Referral Form, to the department; **or**

2. CRP-6, Children's Review Program Notice of Level of Care Payment Authorization Reassignment, to the department and the child-caring facility or the child-placing agency;

(3) **Conduct a utilization review for a child[~~Reassess a child utilization review~~]**:

(a) Six (6) months from the initial placement or reassignment and placement in a child-caring facility and child-placing agency; and

(b)1. Every three (3) months thereafter if the child is in a private child care residential placement; or

2. Every six (6) months thereafter if the child is in a foster care placement or therapeutic foster care;

(4) Reassign a child's level of care after the previous level has expired;

(5) Monitor each child-caring facility and child-placing agency; **[~~and~~]**

(6) Maintain a confidential information system for each child served that shall include:

(a) Placement history;

(b) Level of care assignments;

(c) Length of treatment; and

(d) Discharge outcomes**; and**

(7) For a utilization review, return the completed CRP-2, Children's Review Program Notice of Level of Care Payment Authorization, to the private child-caring facility or private child-placing agency and the cabinet after a level is conducted or reassigned.

Section 4. Levels of Care. A level of care shall be assigned in accordance with ***this section.[~~the following standards:~~]***

(1) A Level I child ***shall be a child who*** requires a routine home environment that:

(a) Provides maintenance;

(b) Provides guidance;

(c) Provides supervision to meet the needs of the child; and

(d) Ensures the emotional and physical well-being of the child.

(2) A Level II child ***shall be a child who***:

(a) May engage in nonviolent antisocial acts, but be capable of meaningful interpersonal relationships; and

(b) Requires supervision in a structured supportive setting with:

1. Counseling available from professional or paraprofessional staff;

2. Educational support; and

3. Services designed to improve development of normalized social skills.

(3) A Level III child ***shall be a child who***:

(a) May engage in an occasional violent act;

(b) May have superficial or fragile interpersonal relationships;

(c) Requires supervision in a structured, supportive environment where the level of supervision and support may vary from low to moderate, proportional to the child's ability to handle reduced structure;

(d) May occasionally require intense levels of intervention to maintain the least restrictive environment; and

(e) Requires a program flexible enough to allow:

1. Extended trials of independence ***if[~~when~~]*** the child is capable;

2. A period of corrective and protective structure during relapse; and

3. Counseling available from professional or paraprofessional staff.

(4) A Level IV child ***shall be a child who***:

(a) Has behavioral and physical, mental, or social needs that may present a moderate risk of causing harm to himself or others; and

(b) Requires a structured supportive setting with:

1. Therapeutic counseling available by professional staff; and

2. A physical, environmental, and treatment program designed to improve social, emotional, and educational adaptive behavior.

(5) A Level V child ***shall be a child who***:

(a) Has a severe impairment, disability, or need;

(b) Is consistently unable or unwilling to cooperate in his own care;

(c) Presents a severe risk of causing harm to himself or others; and

(d) Requires Level IV services and a:

1. Highly structured program with twenty-four (24) hour supervision; or

2. Specialized setting that provides safe and effective care for a severe, chronic medical condition, behavioral disorder, or emotional disturbance.

Section 5. Payment Methodology and Rates. (1) Payment Methodology.

(a) The cabinet shall base a per diem rate for the care of a child placed by the cabinet in a private child-caring facility, upon the model program cost analysis defined at KRS 199.641(1)(d).

(b) Each private, nonprofit child caring facility shall report to the cabinet annually, on the[~~Form~~] DPP-888, Cost Report and Time Study and Instructions.

(2) The cabinet shall establish an index factor for payment on behalf of a child for whom a level of care has been determined.

(a) The factor shall be determined as follows:

1. Based on the amount of treatment provided at each level of care; and

2. By determining the median of:

a. Number of daily treatment hours, derived from time study data, provided to children served by private, nonprofit child-caring facilities; and

b. Level of care of children served by private, nonprofit child-caring facilities that contract with the cabinet***.[;]***

(b)1. For children whose level is determined, the median level of care shall be represented by an index factor of one[.] (1).

2. For children whose level is not determined, the median level of care shall be represented by an index factor that is proportionate to the amount of treatment provided to the children in the median level pursuant to subparagraph 1 of this paragraph.

(3) A statewide median cost, including board, care, and treatment components, for each level of care shall be calculated by using a utilization factor of ninety (90) percent for residential treatment and seventy-five (75) percent for a group home.

(4) The payment rate for each level of care shall be calculated by multiplying the median cost by the index factor specific to that level of care. The rate for each level of care shall be adjusted by the Consumer Price Index during each intervening period between the fiscal year used for the cost analysis and calculation of the rate.

(5) Statewide median cost shall be calculated:

(a) Using a utilization factor of eighty (80) percent:

1. For an emergency shelter with a treatment license:

a. Board;

b. Care; and

c. Treatment components; or

2. For an emergency shelter without a treatment license:

a. Board; and

b. Care components; and

(b) Adjusting for each level of care by the Consumer Price Index during each intervening period between the fiscal year used for the cost analysis and calculation of the rate.

(6)(a) To the extent funds are available, an incentive payment for a private child-caring facility that participates in a per diem rate contract with the cabinet shall be determined by evaluating the performance of the child-caring facility, in accordance with KRS 199.641(2)(a). Measurable performance outcomes shall include:

1. Child safety while in the care of a private child-caring facility or child-placing agency;

2. Child safety after reunification with the child's family;

3. Adequate educational support;

4. Reduced time spent in out-of-home care without an increase in the rate of out-of-home care reentry;

5. Increased placement stability during the service period;

6. Increased achievement of permanency goals; and

7. Increased stability in permanency placement following planned discharge.

(b) The cabinet's contract with a private child-caring facility shall specify the:

1. Indicators used to measure the performance outcomes described in paragraph (a) of this subsection***[~~of this section~~]***; and

2. Target percentages used as performance goals.

(c) Each child in the custody of the cabinet who is placed in a private child-caring facility during the contract period shall be included in the percentage of children for whom the cabinet expects achievement of an outcome.

(d) ***When[~~At the time~~]*** the contract period expires, each private child-caring facility shall be ranked based on the percentage of children for whom the facility achieved an outcome. To the extent funds are available, a payment incentive shall be distributed to a private child-caring facility that performed in the top one-third (1/3) of the facilities.

(e) The amount of a payment incentive shall be determined according to the funding appropriated for this purpose in the biennial budget.

(7) In addition to services provided on a per diem rate, the cabinet shall solicit proposals from private child-caring facilities or child-placing agencies to provide alternative services to children and their families. To the extent funds are available, the alternative services:

(a) Shall be geared toward improved performance outcomes; and

(b) May include case management responsibilities shared between the cabinet and the child-caring facility or child-placing agency.

(8) Payment to child-caring facilities or child-placing agencies that provide alternative services according to subsection (7) of this section shall be based upon expectations agreed upon between the cabinet and the child-caring facility or child-placing agency such as:

(a) Reduced length of stay in out-of-home placement;

(b) Increased safety from child abuse or neglect;

(c) Increased number of children moving into and remaining in permanent placement;

(d) Increased number of children and their families cared for in close proximity to their home communities;

(e) Increased number of children reunified with their families;

(f) Increased accountability for success in after care; or

(g) Decreased reentry into state custody.

Section 6. Residential Care. (1) A child-caring facility in the levels of care **system[~~reimbursement plan~~]** shall be licensed under 922 KAR 1:305 and shall meet the standards for child-caring facilities established in 922 KAR 1:300.

(2) The facility shall comply with 922 KAR 1:390, Section 4, Residential Treatment Program, if providing treatment oriented services.

(3) The daily rate for residential care to a child-caring facility shall be:

(a) Level I - fifty-one (51) dollars and nineteen (19) cents;

(b) Level II - sixty-one (61) dollars and fifty-two (52) cents;

(c) Level III - $109.71;

(d) Level IV:

1.[-] $151.03; or

2. $175.87 on or after August 4, 2014; and

(e) Level V:

1.[~~–~~] $210.64; or

2. $218.99 on or after August 4, 2014.

Section 7. Emergency Shelter Care. (1) An emergency shelter child-caring facility shall meet the requirements of 922 KAR 1:380. The rate for emergency shelter care shall be:

(a) $115.31 per day for a child-caring facility with a treatment license; or

(b) $101.41 per day for a child-caring facility without a treatment license.

(2) If a child's treatment placement is disrupted and the child enters an emergency shelter child-caring facility with a treatment license, the emergency shelter child-caring facility shall:

(a) Receive a rate consistent with the child's assigned level of care for residential care during the previous placement, pending results of the next-scheduled utilization review;[~~or~~]

(b) If the child is Level II or lower, receive a rate not less than the rate for emergency shelter care in accordance with subsection (1) of this section per day; and

(c) Adhere to the child's individual treatment plan.

(3)(a) If the department determines that a child without an assigned level of care shall remain in an emergency shelter child-caring facility longer than thirty (30) days, the department shall make a referral to the gatekeeper, by the 20th day of placement, for assignment to an appropriate level of care.

(b) If a child remains in an emergency shelter longer than thirty (30) days, the emergency shelter child-caring facility with a treatment license shall:

1. Receive the residential rate consistent with the assigned level of care for each day the child is in the facility beyond the 30th day;

2. If the child is Level II or lower, receive a rate not less than the rate for emergency shelter care in accordance with subsection (1) of this section per day; and

3. Adhere to the child's individual treatment plan.

Section 8. Foster Care and Therapeutic Foster Care for a Child-Placing Agency. (1) The basic daily rate for foster care shall be:

(a) Forty-three (43) dollars; or

(b) Forty-four (44) dollars and eighty-two (82) cents on or after August 4, 2014.

(2) The daily rates for therapeutic foster care shall be as follows:

(a) Levels I and II, if the child is stepped down from Level III or higher:

1.[-] Seventy-three (73) dollars; or

2. Seventy-six (76) dollars and ten (10) cents on or after August 4, 2014.

(b) Level III:[-]

1. Seventy nine (79) dollars and seventy-eight (78) cents; or

2. Eighty-three (83) dollars and sixteen (16) cents on or after August 4, 2014.

(c) Level IV:[-]

1. Ninety-seven (97) dollars and eleven (11) cents; or

2. $101.23 on or after August 4, 2014.

(d) Level V:

1.[-] $134.26; or

2. $139.96 on or after August 4, 2014.

Section 9. Pregnant and Parenting Teen Programs. A child-caring facility with a pregnant and parenting teen program shall receive:

(1) A rate consistent with the assigned level of care for the adolescent parent; and

(2) Inclusive of child care cost, the amount specified in Section 8(1) of this administrative regulation[~~forty-three (43) dollars per day,~~] for the committed child of an adolescent parent who is committed to the cabinet.

Section 10. Provider Requirements. (1) A child-caring facility or child-placing agency shall:

(a) Inform the department of the levels of care the facility or agency has the ability to serve;

(b) Demonstrate its ability to provide services, either directly or by contract, appropriate to the assigned level for each child, including:

1. Room, board, and other activity contributing to housing, food, clothing, school supplies, or personal incidentals;

2. Clinical services including:

a. The evaluation and treatment of an emotional disorder, mental illness, or substance abuse problem; and

b. Identification and alleviation of related disability or distress, experienced by a child who follows a specific individual treatment plan targeted to identify a problem; and

3. Support services that:

a. Identify necessary resources and coordinate services provided by a range of agencies or professionals;

b. Allow a child to cope with the disability or distress;

c. Provide access to improving the educational or vocational status of the child; and

d. Provide essential elements of daily living;

(c) Submit the following reports to the gatekeeper in time for the reports to be received by the gatekeeper within thirty (30) days prior to the utilization review due date:

1. For a child who has an IQ[~~above~~] seventy (70) or above, a behavior inventory appropriate to the child's developmental level consisting of completed forms specified in Section 2(2)(l) of this administrative regulation[~~:~~

~~a. Child Behavior Checklist for Ages one and one-half (1 1/2) - five (5) (Achenbach); or~~

~~b. Child Behavior Checklist for Ages six (6) - eighteen (18) (Achenbach), every six (6) months~~]; and

2. For a child who has an IQ below seventy (70), a behavioral inventory appropriate to the child's development level:

a. Consisting of:

(i) A completed Reiss Scales for Children's Dual Diagnosis (Mental Retardation and Psychopathology); or

(ii) Another completed tool identified and piloted pursuant to the Promoting Wellbeing and Adoption after Trauma Grant in accordance with 42 U.S.C. 622(b)(15)(A); and

b. By the first utilization review due date and every twelve (12) months thereafter; and

3. To the gatekeeper and designated cabinet staff, a copy of the CRP-7, Children's Review Program Application for Level of Care Payment (ALP)[~~following completed forms~~]:

a. On a quarterly basis, for a private child care residential placement[~~, CRP-001, Children's Review Program Residential Application for Level of Care Payment~~]; or

b. On a semiannual basis for a foster care placement[~~, CRP-003, Children's Review Program Foster Care Application for Level of Care Payment~~];

(d) Provide outcomes data and information as requested by the gatekeeper; and

(e) Obtain accreditation within two (2) years of initial licensure or within two (2) years of acquiring an agreement with the cabinet, whichever is later, from a nationally-recognized accreditation organization, such as:

1. The Council on Accreditation; or

2. The Joint Commission on Accreditation for Healthcare

Organizations.

(2) Emergency shelters without a treatment license shall be exempt from the accreditation requirements specified in subsection (1)(e) of this section.

Section 11. Utilization Review and Authorization of Payment. (1) The child-caring facility or child-placing agency shall submit to the gatekeeper the reports specified in Section 10(1)(c) of this administrative regulation for the utilization review in time for the reports to be received by the gatekeeper within thirty (30) days prior to the utilization review due date.

(2) If the child-caring facility or child-placing agency fails to submit the reports as specified in Section 10(1)(c) of this administrative regulation in time for the reports to be received by the gatekeeper within thirty (30) days prior to the utilization review due date, the cabinet shall:

(a) Suspend payments until the necessary information has been submitted to the gatekeeper;

(b) If a child's level is reduced after untimely reports are received by the gatekeeper, make an adjustment for overpayment retroactive to the first utilization review due date that was missed; or

(c) If a child's level is increased as a result of delinquent reports, apply a higher rate beginning the day after the untimely reports are received by the gatekeeper.

(3) If the child-caring facility makes timely submission of the reports, and if the:

(a) Level of care remains unchanged, payments shall continue unchanged;

(b) Level of care is reduced, and the:

1. Child remains in the same placement, the lower level of care shall be effective on the 31st day following the utilization review due date; or

2. Child is placed in another child-caring facility or child-placing agency after the utilization review due date, the rate for the lower level shall be effective on the day the child is placed; or

(c) Level of care is increased, the rate for the higher level of care shall be effective the day after the utilization review due date.

(4) If a child-caring facility, child-placing agency, or the department determines it to be in the best interest of a child to be transitioned from a residential program to another program and the required reports specified in Section 10(1)(c) of this administrative regulation have been submitted on time, and if:

(a) The program is not therapeutic foster care, the rate for the level resulting from the utilization review shall remain in effect until the next scheduled utilization review; or

(b) The new program is therapeutic foster care, the residential rate for the level resulting from the utilization review shall remain in effect for thirty (30) days after the change in placement. On the 31st day**,** the therapeutic foster care rate for the assigned level shall apply.

(5) If the child-caring facility, child-placing agency, or cabinet staff disagrees with the level of care assigned by the gatekeeper, the child-caring facility, child-placing agency, or cabinet staff may request a redetermination as specified in Section 12 of this administrative regulation.

Section 12. Redetermination. (1) If the child-caring facility, child-placing agency, or cabinet staff disagrees with the level of care assigned by the gatekeeper, the child-caring facility, child-placing agency, or cabinet staff may request a redetermination of the assigned level by providing to the gatekeeper:

(a) New information which supports the request for a new level; and

(b) Completion of the "request for redetermination" section of one (1) of the following forms:

1. DPP-886, Private Child Care Client Inter-agency Referral Form**,** for an initial or reassigned level;

2. CRP-2[~~CRP-002~~], Children's Review Program**[~~Private Child Care~~]** Notice of Level of Care Payment Authorization**,** [~~form~~] for a utilization review;

3. **CRP-4, Children's Review Program Notice of Level of Care Redetermination;**

4. CRP-5[~~CRP-005~~], Children's Review Program DCBS Foster Care Utilization Review Notice of Level Assignment**,**[~~form~~] for a utilization review; or

5.[~~4.~~] CRP-6[~~CRP-006~~], Children's Review Program**[~~Private Child Care~~]** Notice of Level of Care Payment Authorization Reassignment,[~~form~~] for a reassignment.

(2) If the request for a redetermination is received by the gatekeeper within thirty (30) days after the most recent utilization review or admission, and if the gatekeeper assigns a higher level with a CRP-4[~~CRP-004~~], Children's Review Program Notice of Level of Care Redetermination, the increased payment shall be retroactive to the most recent of the following:

(a) The date of the most recent utilization review due date; or

(b) The date of admission.

(3) If the request for redetermination is received by the gatekeeper more than thirty (30) days after the most recent utilization review or admission, and if a:

(a) Higher level is assigned by the gatekeeper with a CRP-4[~~CRP-004~~], the increased payment shall be effective the day after the request is received by the gatekeeper; or

(b) Lower level is assigned by the gatekeeper with a CRP-4[~~CRP-004~~], the lower payment shall be effective thirty (30) days after the request is received by the gatekeeper.

(4) If the child-caring facility, child-placing agency, or cabinet staff does not agree with the redetermination as provided by the CRP-4[~~CRP-004~~], an appeal may be requested in accordance with Section 14 or 15 of this administrative regulation.

Section 13. Reassignment. (1) If the level of care expires and the child is moved to a different **child-caring facility or child-placing agency** placement, a reassigned level of care shall be obtained by the:

(a) Department completing a level of care packet for a level assignment; or

(b) New child-caring facility or child-placing agency submitting the following within thirty (30) days of the placement:

1. A cover letter requesting a reassignment;

2. An assessment of the child;

3. Documentation to support the level of care assignment, such as the level of care packet or discharge summary; and

4. Material as specified in Section 2(2)(l) of this administrative regulation[~~If the child has an IQ of seventy (70) or above:~~

~~a. Child Behavior Checklist For Ages one and one-half (1 1/2) - five (5) (Achenbach); or~~

~~b. Child Behavior Checklist for Ages six (6) - eighteen (18)~~].

(2) The reassigned level of care rate shall be effective on the date of admission to the new placement.

(3) If the child-caring facility or child-placing agency disagrees with the level of care assigned by the gatekeeper, the child-caring facility or child-placing agency may request a redetermination as specified in Section 12 of this administrative regulation.

Section 14. Informal Dispute Resolution. (1) A contract agent dissatisfied by a decision of the cabinet or a gatekeeper may seek informal resolution by filing a request with the secretary of the cabinet, or designee, within ten (10) days following notice of the decision.

(2) Upon receipt of a request for informal resolution, the cabinet shall:

(a) Review the request; and

(b) Render a written decision on the issue raised **within thirty (30) calendar days unless an extension is granted by the secretary or designee:**

1. Due to extenuating circumstances that prolong the review; and

2. With notice provided to the contract agent.

(3) If the dispute relates to a decrease or denial of payment, the contract agent may request an administrative hearing in accordance with Section 15 of this administrative regulation.

Section 15. Administrative Hearing Process. A child-caring facility or child-placing agency may request an administrative hearing in accordance with 922 KAR 1:320.

Section 16. Incorporation by Reference. (1) The following material is incorporated by reference:

(a) "Child Behavior Checklist for Ages 1 1/2 - 5 (Achenbach)",[~~edition~~] 7/00;

(b) "Child Behavior Checklist for Ages 6-18 (Achenbach)",[~~edition~~] 6/01;

(c) "CRP-2[~~"CRP-001, Children's Review Program Residential Application for Level of Care Payment", edition 11/04;~~

~~(d) "CRP-002~~], Children's Review Program**[~~Private Child Care~~]** Notice of Level of Care Payment Authorization", **11/14**[~~**8/14**~~][~~edition 11/04~~];

(d) "CRP-4[~~(e) "CRP-003, Children's Review Program Foster Care Application for Level of Care Payment", edition 7/07;~~

~~(f) "CRP-004~~], Children's Review Program Notice of Level of Care Redetermination", **11/14**[~~**8/14**~~][~~edition 11/04~~];

(e)[~~(g)~~] "CRP-5[~~CRP-005~~], Children's Review Program DCBS Foster Care Utilization Review Notice of Level Assignment", **11/14**[~~**8/14**~~][~~edition 11/04~~];

(f)[~~(h)~~] "CRP-6[~~CRP-006~~], Children's Review Program**[~~Private Child Care~~]** Notice of Level of Care Payment Authorization Reassignment", **11/14**[~~**8/14**~~][~~edition 7/07~~];

(g) "CRP-7, Children's Review Program Application of Level of Care Payment (ALP)", **11/14**[~~**8/14**~~];

(h)[~~(i)~~] "DPP-114, Level of Care Schedule", 8/14[~~edition 6/08~~];

(i)[~~(j)~~] "DPP-886, Private Child Care Client Inter-agency Referral Form",[~~edition~~] 10/04;

(j)[~~(k) "DPP-886A, Application for Referral and Needs Assessment", edition 07/07;~~

~~(l)~~] "DPP-888, Kentucky Cabinet for Health and Family Services Annual Audited Cost Report and Time Study and Instructions for Completing the Cost Report Time Study Codes and Definitions, and Instructions for the Time Study, for Child-Caring and Child-Placing Programs and Facilities",[~~edition~~] 10/04; and

(k)[~~(m)~~] "Reiss Scales for Children's Dual Diagnosis (Mental Retardation and Psychopathology)",[~~edition~~] 1990.

(2) This material may be inspected, copied, or obtained, subject to applicable copyright law, at the Department for Community Based Services, 275 East Main Street, Frankfort, Kentucky 40621, Monday through Friday, 8 a.m. to 4:30 p.m.

TERESA C. JAMES, LCSW, Commissioner
AUDREY TAYSE HAYNES, Secretary

APPROVED BY AGENCY: November 12, 2014

FILED WITH LRC: November 13, 2014 at 2 p.m.

CONTACT PERSON: Tricia Orme, Office of Legal Services, 275 East Main Street 5 W-B, Frankfort, Kentucky 40601, phone 502-564-7905, fax 502-564-7573, tricia.orme@ky.gov.

CABINET FOR HEALTH AND FAMILY SERVICES
Department for Community Based Services
Division of Protection and Permanency
(As Amended at ARRS, December 9, 2014)

922 KAR 5:070. Adult protective services.

RELATES TO: KRS***[~~Chapter~~]*** 13B, 61.872, 194A.010,***[~~Chapter 209~~]***[~~209.005 -209.200~~], 202A.051, 202B.100, ***209,*** 387.540(1), 42.U.S.C. 1397

STATUTORY AUTHORITY: KRS 194A.050(1), 209.030(1)

NECESSITY, FUNCTION, AND CONFORMITY: KRS 194A.050(1) requires the secretary to adopt all administrative regulations necessary under applicable state laws to protect, develop, and maintain the health, personal dignity, integrity, and sufficiency of the individual citizens of the Commonwealth and necessary to operate the programs and fulfill the responsibilities vested in the cabinet. KRS 209.030(1) authorizes the secretary to promulgate administrative regulations necessary for the implementation of adult protective services. This administrative regulation establishes the procedures for investigation and protection of adults who are suffering or at risk of abuse, neglect, or exploitation.

Section 1. Definitions. (1) "Abuse" is defined by KRS 209.020(8).

(2) "Adult" is defined by KRS 209.020(4).

(3) "Authorized agency" is defined by KRS 209.020(17).

(4) "Caretaker" is defined by KRS 209.020(6).

(5) "Emergency" is defined by KRS 209.020(11).

(6) "Employee" is defined by KRS 209.032(1)(a).

(7) "Exploitation" is defined by KRS 209.020(9).

(8)[~~(7)~~] "Investigation" is defined by KRS 209.020(10).

(9)[~~(8)~~] "Neglect" is defined by KRS 209.020(16).

(10)[~~(9)~~] "Protective services" is defined by KRS 209.020(5).

(11)[~~(10)~~] "Records" is defined by KRS 209.020(15).

(12) "Validated substantiated finding of adult abuse, neglect, or exploitation" is defined by KRS 209.032(1)(b).

(13) "Vulnerable adult services provider" is defined by KRS 209.032(1)(c).

Section 2. Receiving a Report of Adult Abuse, Neglect, or Exploitation. (1) An individual suspecting that an adult has suffered abuse, neglect, or exploitation shall:

(a) Report to the cabinet in accordance with KRS 209.030(2) and (3); and

(b) Provide the information specified in KRS 209.030(4).

(2) The identity of the reporting individual shall remain confidential in accordance with KRS 209.140.

(3) The cabinet shall make available a twenty-four (24) hour on-call response system for emergency reporting after normal office hours.

(4) The cabinet shall investigate an anonymous report that provides sufficient information regarding the alleged abuse, neglect, or exploitation of an adult.

(5) If a report does not meet criteria for investigation, the cabinet may refer the reporting source to:

(a) Community resources;

(b) General adult services in accordance with 922 KAR 5:090; or

(c) Domestic violence protective services in accordance with 922 KAR 5:102.

(6) Upon accepting a report for investigation of alleged adult abuse, neglect, or exploitation, the cabinet shall:

(a) Conduct an initial assessment and initiate an investigation in accordance with KRS 209.030(5); and

(b) Take into consideration the safety of the adult when proceeding with the actions necessary to initiate an investigation.

(7) The cabinet shall initiate an investigation upon acceptance of a report of:

(a) Abuse, as defined in KRS 209.020(8), if the report alleges:

1. Marks that are or have been observed on an adult that another individual allegedly inflicted;

2. Physical abuse inflicted upon the adult resulting in pain or injury, including a mental injury;

3. An adult being hit in a critical area of the body, such as the head, face, neck, genitals, abdomen, and kidney areas; or

4. An act of sexual abuse;

(b) Neglect, as defined in KRS 209.020(16), of an adult that may result in harm to the health and safety of the adult in the following areas:

1. Hygiene neglect, if the adult has physical symptoms that require treatment due to poor care as a result of:

a. An act or omission by a caretaker; or

b. The absence of a caretaker;

2. Supervision neglect, if the reporting source has observed a physical health and safety risk to an adult resulting from a lack of necessary and appropriate supervision;

3. Food neglect, if an adult shows symptoms of:

a. Malnutrition;

b. Dehydration;

c. Food poisoning; or

d. Lack of adequate food for a period of time that:

(i) Results in physical symptoms; or

(ii) Requires treatment;

4. Environmental neglect, if a serious health and safety hazard is present, and the adult or the adult's caretaker is not taking

appropriate action to eliminate the problem; or

5. Medical neglect, if the adult is not receiving treatment for an injury, illness, or disability that:

a. Results in an observable decline in the adult's health and welfare;

b. May be life threatening; or

c. May result in permanent impairment;

(c) Exploitation of an adult, as defined in KRS 209.020(9), if the report alleges:

1. Isolation from friends, relatives, or important information, such as:

a. Screening telephone calls;

b. Denying visitors; or

c. Intercepting mail;

2. Physical or emotional dependency;

3. Manipulation;

4. Acquiescence; and

5. Loss of resources; or

(d) An adult in need of protective services as defined in KRS 209.020(5).

(8) If a report alleging the exploitation of an adult does not meet criteria established in subsection (7)(c) of this section, the report may be referred to an appropriate authorized agency or community resource.

(9) The following criteria shall be used in identifying a report of adult abuse, neglect, or exploitation not requiring an adult protective service investigation:

(a) The report does not meet the statutory definitions of:

1. Adult; and

2.a. Abuse;

b. Neglect; or

c. Exploitation; or

(b) There is insufficient information to:

1. Identify or locate the adult; or

2. Explore leads to identify or locate the adult.

(10) For a report accepted for investigation of alleged adult abuse, neglect, or exploitation, designated regional cabinet staff shall provide the information specified in KRS 209.030(4):

(a)[~~Prepare an intake report on the "DPP-115, Confidential Suspected Abuse/Neglect, Dependency or Exploitation Reporting Form"; and~~

~~(b) Submit the DPP-115:~~

~~1.~~] For a determination of investigation assignment by cabinet supervisory staff;

(b)[~~2.~~] To the local guardianship office, if the adult is a state guardianship client; and

(c)[~~3.~~] To appropriate authorized agencies, as specified in KRS 209.030(5).

Section 3. Adult Protective Service Investigations. (1) The cabinet shall coordinate its investigation in accordance with KRS 209.030(6).

(2) An adult protective service investigation may include contact with the alleged perpetrator and collaterals, if the contact does not pose a safety concern for the adult or cabinet staff.

(3) Information obtained as a result of a protective service investigation shall be kept confidential in accordance with KRS 209.140.

(4) Requests for written information of the protective service investigation, except for court ordered releases, shall be handled through the open records process in accordance with KRS 61.872 and 922 KAR 1:510.

(5) Designated regional cabinet staff shall initiate the investigation of a report of adult abuse, neglect, or exploitation. If the accepted report of adult abuse, neglect, or exploitation with the expressed permission of the adult indicates:

(a) An emergency[~~, as defined in KRS 209.020(11)~~], the investigation shall be initiated within one (1) hour; or

(b) A nonemergency, the investigation shall be initiated within forty-eight (48) hours.

(6) If permission is granted by the adult, designated regional cabinet staff may take photographs, audio, or video recordings.

(7)(a) The cabinet shall obtain a written voluntary statement of adult abuse, neglect, or exploitation if the adult, witness, or alleged perpetrator is willing to provide the written statement; and

(b) The cabinet shall inform the adult, witness, or alleged perpetrator that the:

1. Statement may be shared with appropriate authorized agencies; and

2. Individual may be required to testify in a court of law.

(8) If investigating reports of alleged abuse or neglect of an adult resulting in death, designated regional cabinet staff shall:

(a) Examine the coroner's or doctor's report;

(b) Obtain a copy of the death certificate for the case record, if possible;

(c) Notify the commissioner or designee;

(d) Consult with appropriate law enforcement, in accordance with KRS 209.030(6)(a) in completing the investigation, if an adult died allegedly as a result of abuse or neglect; and

(e) Determine if another resident in an alternate care facility is at risk of abuse or neglect, if the findings of an investigation suggest that an adult in the alternate care facility died allegedly as a result of abuse or neglect.

(9) Unless the legal representative is alleged to have abused, neglected, or exploited the adult, a legal representative may act on behalf of an adult for purposes of this administrative regulation.

Section 4. Results of the Investigation. (1) Designated regional cabinet staff shall address the following when evaluating the results of the investigation:

(a) The adult's account of the situation, if possible;

(b) The alleged perpetrator's account of the situation, if available;

(c) The information supplied by collateral contact;

(d) Records and documents;

(e) The assessment information;

(f) Previous reports involving the adult or alleged perpetrator; and

(g) Other information relevant to the protection of an adult.

(2) The findings of the adult protective service investigation shall be:

(a) Shared with appropriate authorized agencies in accordance with KRS 209.030(5); and

(b) Documented on the cabinet's database.

(3) Designated regional cabinet staff shall maintain a written record, as specified in KRS 209.030(5), to include:

(a) Information reported in accordance with KRS 209.030(4)[~~The DPP-115~~]; and

(b) A narrative documenting:

1. The investigation; and

2. Findings of the investigation.

(4) If an issue or concern identified by the cabinet does not require a protective service case being opened, the cabinet may work with the adult to develop an aftercare plan:

(a) At the consent of the adult; and

(b) In an effort to prevent a recurrence of adult abuse, neglect, or exploitation.

Section 5. Substantiation Criteria and Submission of Findings.

(1) In determining if an allegation is substantiated, the cabinet shall use the statutory definitions of:

(a) Adult; and

(b)1. Abuse;

2. Neglect; or

3. Exploitation.

(2) If preponderance of evidence exists, designated regional cabinet staff may make a finding of and substantiate abuse, neglect, or exploitation.

(3) A finding made by cabinet staff shall not be a judicial finding.

(4) Cabinet supervisory staff shall review and approve a finding of an investigation prior to its finalization.

Section 6. Reports of Adult Abuse, Neglect, or Exploitation Involving an Employee or Compensated Person. If the cabinet receives a report involving an employee or a person acting with the

expectation of compensation, cabinet staff shall provide the alleged perpetrator during the investigative interview:

(1) Notice of the basic allegations, which shall be void of any specifics that may compromise the investigation;

(2) Notice that the alleged perpetrator will be provided notification of the findings upon completion of the investigation;

(3) Due process requirements in accordance with KRS Chapter 13B and KRS 209.032; and

(4) A statement that a validated substantiated finding shall be reported on the caregiver misconduct registry governed by 922 KAR 5:120.

Section 7. Opening a Case. (1) A case may be opened:

(a) As a result of a protective service investigation; or

(b) Upon identification of an adult through a general adult services assessment as being at risk of abuse, neglect, or exploitation.

(2) The decision to open a case shall be based on the:

(a) Voluntary request for, or acceptance of, services by an adult who needs adult protection or general adult services; or

(b) Need for involuntary emergency protective services.

(3) If it has been determined that an adult is incapable of giving consent to receive protective services, the court may assume jurisdiction and issue an ex parte order in accordance with KRS 209.130.

(4) Emergency protective services shall be provided in accordance with KRS 209.110.

(5) The cabinet shall develop an adult's case plan with the adult and, upon consent of the adult, may include consideration of the following:

(a) Designated regional cabinet staff;

(b) Family members;

(c) Family friends;

(d) Community partners; or

(e) Other individuals requested by the adult.

(6) Within thirty (30) calendar days of opening a case, designated regional cabinet staff shall:

(a) Initiate a case plan with the adult; and

(b) Submit the plan to supervisory staff for approval.

Section 8.[~~7.~~] Referrals for Criminal Prosecution. The cabinet shall refer substantiated reports of adult abuse, neglect, or exploitation to Commonwealth attorneys and county attorneys for consideration of criminal prosecution in accordance with KRS 209.180.

Section 9.[~~8.~~] Restraining Order or Injunctive Relief. If necessary, designated regional cabinet staff shall contact the cabinet's Office of Legal Services for advice and assistance in obtaining restraining orders or other forms of injunctive relief that may be issued for protection of an adult, in accordance with KRS 209.040.

Section 10.[~~9.~~] Guardianship or Conservatorship of Disabled Persons. (1) In an attempt to provide appropriate protective services, designated regional cabinet staff shall assess the need for guardianship if an individual appears unable to make an informed choice to:

(a) Manage personal affairs;

(b) Manage financial affairs; or

(c) Carry out the activities of daily living.

(2) Designated regional cabinet staff may assist in protective service situations in seeking out family, friends, or other interested and qualified individuals who are willing and capable to become guardians.

(3) Upon an order of the court, the cabinet shall file an interdisciplinary evaluation report in accordance with KRS 387.540(1).

Section 11.[~~10.~~] Involuntary Hospitalization. (1) Designated regional cabinet staff shall encourage the voluntary hospitalization of an adult who needs to secure mental health treatment to avoid serious physical injury or death.

(2) Designated regional cabinet staff may file a petition for involuntary hospitalization in accordance with KRS 202A.051 and 202B.100 if:

(a) The adult lacks the capacity to consent or refuses mental health treatment;

(b) Other resources are not available;

(c) Another petitioner is absent or unavailable; and

(d) Prior cabinet supervisory approval is obtained.

Section 12.[~~11.~~].Reporting. (1) Reports of adult abuse, neglect, or exploitation shall be maintained in the cabinet's database for:

(a) Use in future investigations; and

(b) Annual reporting requirements as specified in KRS 209.030(12).

(2) The cabinet shall submit a report annually to the Governor and Legislative Research Commission in accordance with KRS 209.030(12)(b).

(a) In addition to the information required by KRS 209.030(12)(b), the summary of reports received by the cabinet shall include for each individual who is the subject of a report:

1. Age;

2. Demographics;

3. Type of abuse;

4. The number of:

a. Accepted reports; and

b. Substantiated reports; and

5. Other information relevant to the protection of an adult.

(b) The information required in paragraph (a) of this subsection shall only be provided if it does not identify an individual.

Section 13.[~~12.~~] Case Closure and Aftercare Planning. (1) The cabinet's decision to close an adult protective service case shall be based upon:

(a) Evidence that the factors resulting in adult abuse, neglect, or exploitation are resolved to the extent that the adult's needs have been met;

(b) The request of the adult; or

(c) A lack of legal authority to obtain court ordered cooperation from the adult.

(2) An adult shall be:

(a) Notified in writing of the decision to close the protective service case; and

(b) Advised of the right to request a service appeal in accordance with Section 14[~~13~~] of this administrative regulation.

(3) If an adult protective service case is appropriate for closure, the cabinet may work with the adult to develop an aftercare plan:

(a) At the consent of the adult; and

(b) In an effort to prevent a recurrence of adult abuse, neglect, or exploitation.

(4) If the cabinet closes the protective service case in accordance with this section, aftercare planning may link the adult to community resources for the purpose of continuing preventive measures.

Section 14.[~~13.~~] Appeal Rights. (1) A victim of adult abuse, neglect, or exploitation may request a service appeal in accordance with 922 KAR 1:320, Section 2.

(2) If the cabinet makes a finding that an individual providing care to an adult as an employee or with the expectation of compensation has committed adult abuse, neglect, or exploitation, the **individual[~~employee~~]** shall receive appeals in accordance with 922 KAR 5:120[~~Section 14. Incorporation by Reference. (1) "DPP-115, Confidential Suspected Abuse/Neglect, Dependency, or Exploitation Reporting Form", edition 9/05, is incorporated by reference.~~

~~(2) This material may be inspected, copied, or obtained, subject to applicable copyright law, at the Department for Community-Based Services, 275 East Main Street, Frankfort, Kentucky 40621, Monday through Friday, 8 a.m. to 4:30 p.m~~].

TERESA C. JAMES, LCSW, Commissioner

AUDREY TAYSE HAYNES, Secretary

APPROVED BY AGENCY: November 12, 2014

FILED WITH LRC: November 13, 2014 at 2 p.m.

CONTACT PERSON: Tricia Orme, Office of Legal Services, 275 East Main Street 5 W-B, Frankfort, Kentucky 40601, phone 502-564-7905, fax 502-564-7573, tricia.orme@ky.gov.

CABINET FOR HEALTH AND FAMILY SERVICES
Department for Community Based Services
Division of Protection and Permanency
(As Amended at ARRS, December 9, 2014)

922 KAR 5:120. Caregiver misconduct registry and appeals.

RELATES TO: KRS Chapter 13B, 209

STATUTORY AUTHORITY: KRS 194A.050(1), 209.032(5)

NECESSITY, FUNCTION, AND CONFORMITY: KRS 194A.050(1) requires the secretary to adopt all administrative regulations necessary under applicable state laws to protect, develop, and maintain the health, personal dignity, integrity, and sufficiency of the individual citizens of the Commonwealth and necessary to operate the programs and fulfill the responsibilities vested in the cabinet. KRS 209.032(5) requires the cabinet to promulgate administrative regulations necessary to implement a central registry of substantiated findings. This administrative regulation establishes the caregiver misconduct registry, due process prior to the addition of an individual to the registry, and error resolution for correction of the cabinet's records.

Section 1. Definitions. (1) "Abuse" is defined by KRS 209.020(8).

(2) "Adult" is defined by KRS 209.020(4).

(3) "Cabinet" means the Cabinet for Health and Family Services.

(4) "Employee" is defined by KRS 209.032(1)(a).

(5) "Exploitation" is defined by KRS 209.020(9).

(6) "Investigation" is defined by KRS 209.020(10).

(7) "Near fatality" means an injury or condition, as certified by a physician, that places an adult in serious or critical condition.

(8) "Neglect" is defined by KRS 209.020(16).

(9) "Records" is defined by KRS 209.020(15).

(10) "Secure methodology" means the deployment of technology to protect the application's authenticity and to keep user communications, browsing, and identity private in accordance with KRS 209.032.

(11) "Validated substantiated finding of adult abuse, neglect, or exploitation" is defined by KRS 209.032(1)(b).

(12) "Vulnerable adult services provider" is defined by KRS 209.032(1)(c).

Section 2. Caregiver Misconduct Registry. (1) The cabinet shall establish a caregiver misconduct registry that contains an individual**[~~who was~~]**:

(a) **Who was** providing care to an adult as an employee or **a person acting[~~otherwise~~]** with the expectation of compensation;

(b) **Who was** the perpetrator of adult abuse, neglect, or exploitation:

1. Pursuant to 922 KAR 5:070; and

2. Substantiated on or after July 15, 2014; and

(c) **With[~~Subject to~~]** a validated substantiated finding of adult abuse, neglect, or exploitation.

(2) An individual **with[~~subject to~~]** a validated substantiated finding of adult abuse, neglect, or exploitation shall:

(a) Remain on the caregiver misconduct registry for a period of at least seven (7) years; and

(b) Be removed from the caregiver misconduct registry:

1. In accordance with the error resolution process described in Section 5 of this administrative regulation if an error is confirmed; or

2. After a period of seven (7) years if:

a. No additional validated substantiated finding of adult abuse, neglect, or exploitation has occurred since the last finding for which the individual's name was placed on the caregiver misconduct registry; and

b. Cabinet records indicate that the incident for which the individual's name was placed on the caregiver misconduct registry did not relate to:

(i) An adult fatality or near fatality related to adult abuse or neglect;

(ii) A criminal conviction related to the incident for which the individual's name was placed on the caregiver misconduct registry; or

(iii) A civil judicial determination related to adult abuse, neglect, or exploitation.

(3) The caregiver misconduct registry shall be available for a web-based query using a secure methodology by:

(a) A vulnerable adult services provider in accordance with KRS 209.032(2); and

(b) An individual in accordance with KRS 209.032(3).

(4) The caregiver misconduct registry shall be accessible through:

(a) The department's main webpage; or

(b) Another cabinet system, such as the Kentucky Applicant Registry and Employment Screening (KARES) Program established in accordance with 906 KAR 1:190.

(5) If an individual or a vulnerable adult service provider described in KRS 209.032(1)(c)11 does not have access to the internet, the individual or provider shall submit a signed and completed DPP-246, Caregiver Misconduct Registry Self-Query, to conduct a self-query in accordance with KRS 209.032(2) or (3).

Section 3. Notification of Finding. (1) If the cabinet finds that an employee or a person acting with the expectation of compensation has committed adult abuse, neglect, or exploitation in accordance with 922 KAR 5:070, the cabinet shall:

(a) Send notice of the finding to the perpetrator by **certified[~~regular~~]** mail; or

(b) Give**[~~the~~]** notice of the finding to the perpetrator, in person, with a witness signature to document that the perpetrator received the notice.

(2) The cabinet's notice of a finding of adult abuse, neglect, or exploitation to an employee or a person acting with the expectation of compensation shall include:

(a) The factual basis for the finding of adult abuse, neglect, or exploitation;

(b) The results of the investigation;

(c) Due process requirements in accordance with KRS Chapter 13B and KRS 209.032;

(d) A statement that a finding shall become a validated substantiated finding of adult abuse, neglect, or exploitation in accordance with KRS 209.032; and

(e) A statement that the individual subject to a validated substantiated finding of adult abuse, neglect, or exploitation shall be added to the caregiver misconduct registry.

Section 4. Appeals. (1) In accordance with KRS 209.032, if the cabinet makes a finding that an individual providing care to an adult as an employee or with the expectation of compensation has committed adult abuse, neglect, or exploitation, the individual shall be afforded an opportunity for an administrative hearing.

(2) An administrative hearing conducted by the cabinet or its designee shall be in accordance with KRS Chapter 13B and 209.032.

(3) The secretary or designee shall issue the final order in accordance with KRS 13B.120 and 209.032.

(4) A party aggrieved by the secretary's decision shall have the right to pursue judicial review in accordance with KRS 13B.140, 13B.150, and 209.032(1)(b).

(5) The proceedings of the administrative hearing shall be disclosed only by the authority of state or federal law.

(6) If the matter is not subject to the requirements of this section, the cabinet shall inform the person that the matter may be pursued through:

(a) A service complaint process described in 920 KAR 1:030 or 922 KAR 1:320; or

(b) The error resolution process in accordance with Section 5

of this administrative regulation.

Section 5. Error Resolution. (1) In accordance with KRS 209.032(5)(a), an individual seeking error resolution shall:

(a) Submit a written request for record correction to the Commissioner of the Department for Community Based Services, 275 East Main Street (3W-A), Frankfort, Kentucky 40621;

(b) Specify the:

1. Date of the caregiver misconduct registry query which resulted in the error being identified; and

2. Error contained in the caregiver misconduct registry query results; and

(c) Provide documentation that verifies the error, if available.

(2) Within thirty (30) days of receipt of a request in accordance with subsection (1) of this section, the commissioner or designee shall:

(a) Determine whether an error exists; and

(b)1. If the cabinet confirms an error:

a. Correct the records; and

b. Notify the requesting individual that the records have been corrected; or

2. If the cabinet cannot confirm an error:

a. Notify the individual that an error cannot be confirmed based upon the information and documentation submitted with the request; and

b. Outline information or documentation that may verify an error pursuant to the individual's request, if any.

Section 6. Incorporation by Reference. (1) The "DPP-246, Caregiver Misconduct Registry Self-Query", ***11/14****[~~7/14~~]*, is incorporated by reference.

(2) This material may be inspected, copied, or obtained, subject to applicable copyright law, at the Department for Community Based Services, 275 East Main Street, Frankfort, Kentucky 40621; Monday through Friday, 8 a.m. to 4:30 p.m.

TERESA C. JAMES, LCSW, Commissioner
AUDREY TAYSE HAYNES, Secretary

APPROVED BY AGENCY: November 12, 2014

FILED WITH LRC: November 13, 2014 at 2 p.m.

CONTACT PERSON: Tricia Orme, Office of Legal Services, 275 East Main Street 5 W-B, Frankfort, Kentucky 40601, phone 502-564-7905, fax 502-564-7573, tricia.orme@ky.gov.

ADMINISTRATIVE REGULATIONS AMENDED AFTER PUBLIC HEARING OR RECEIPT OF WRITTEN COMMENTS

GENERAL GOVERNMENT CABINET
Kentucky Board of Medical Licensure
(Amended After Comments)

201 KAR 9:270. Professional standards for prescribing or dispensing Buprenorphine-Mono-Product or Buprenorphine-Combined-with-Naloxone.

RELATES TO: KRS 311.530-311.620, 311.990
STATUTORY AUTHORITY: KRS 311.565(1)(a)
NECESSITY, FUNCTION, AND CONFORMITY: KRS 311.565(1)(a) authorizes the board to promulgate administrative regulations to regulate the conduct of its licensees. This administrative regulation establishes the professional standards for physicians practicing in Kentucky who prescribe or dispense Buprenorphine-Mono-Product or Buprenorphine-Combined-with-Naloxone.

Section 1. Minimum Qualifications for Prescribing or Dispensing Buprenorphine-Mono-Product or Buprenorphine-Combined-with-Naloxone. A licensed physician shall not prescribe or dispense Buprenorphine-Mono-Product or Buprenorphine-Combined-with-Naloxone unless that physician possesses the minimum qualifications established in this section. (1) The physician shall obtain and maintain in good standing a waiver and license as issued by the Drug Enforcement Administration (DEA) to prescribe Buprenorphine-Mono-Product or Buprenorphine-Combined-with-Naloxone for the treatment of opioid dependence in the Commonwealth of Kentucky.

(2) The physician shall successfully complete the approved educational programs required by this subsection.

(a)1. If the prescribing physician was a DEA-licensed prescriber of Buprenorphine-Mono-Product or Buprenorphine-Combined-with-Naloxone prior to July 1, 2015, the physician shall have obtained Buprenorphine certification through completion of a Substance Abuse and Mental Health Services Administration ("SAMHSA") certified course or through personal attendance and completion of a review course approved by the American Society of Addiction Medicine ("ASAM") prior to July 1, 2015.

2. If the prescribing physician becomes a DEA-licensed prescriber of Buprenorphine-Mono-Product or Buprenorphine-Combined-with-Naloxone on or after July 1, 2015, the physician shall obtain Buprenorphine certification through personal attendance and completion of a review course approved by the American Society of Addiction Medicine ("ASAM") before the physician prescribes or dispenses Buprenorphine-Mono-Product or Buprenorphine-Combined-with-Naloxone.

(b) For each three (3) year continuing education cycle, each DEA-licensed prescriber of Buprenorphine-Mono-Product or Buprenorphine-Combined-with-Naloxone shall complete at least twelve (12) hours of continuing medical education specific to addiction medicine as part of the required continuing medical education hours set forth in 201 KAR 9:310.

(3) The physician shall enroll and participate in the Kentucky Health Information Exchange.

Section 2. Professional Standards for Prescribing or Dispensing Buprenorphine-Mono-Product or Buprenorphine-Combined-with-Naloxone for Medically-Supervised Withdrawal or the Treatment of Opioid Dependency. (1)(a) Except as provided in paragraph (b) of this subsection, Buprenorphine-Mono-Product or Buprenorphine-Combined-with-Naloxone shall only be prescribed or dispensed for medically-supervised withdrawal or as a maintenance treatment for a patient diagnosed with opioid dependence.

(b) Transdermal delivery of Buprenorphine-Mono-Product may be used for treatment of pain.

(2) Buprenorphine-Mono-Product shall not be prescribed or dispensed, except:

(a) To a pregnant patient;

(b) To a patient with demonstrated hypersensitivity to naloxone; or

(c) As an injectable treatment in a physician's office or other healthcare facility.

(3)**(a) Except as provided in paragraph (b) of this section,** Buprenorphine-Mono-Product or Buprenorphine-Combined-with-Naloxone shall not be prescribed or dispensed to a patient who is also being prescribed benzodiazepines, other sedative hypnotics, stimulants or other opioids, without consultation of a physician who is certified by the American Board of Addiction Medicine, the American Board of Medical Specialties (ABMS) in psychiatry, or an American Osteopathic Association (AOA) certifying board in addiction medicine or psychiatry.

(b) A physician may prescribe or dispense Buprenorphine-Mono-Product or Buprenorphine-Combined-with-Naloxone to a patient who is also being prescribed benzodiazepines, other sedative hypnotics, stimulants, or other opioids, without consultation in order to address an extraordinary and acute medical need not to exceed a combined period of thirty (30) days.

(4) Each licensed physician who prescribes or dispenses Buprenorphine-Mono-Product or Buprenorphine-Combined-with-Naloxone for medically-supervised withdrawal or for the treatment of Opioid dependence shall fully comply with the professional standards established in this subsection.

(a) Prior to initiating treatment, the physician shall:

1. Obtain and record a complete and appropriate evaluation of the patient which shall at a minimum include:

a. The patient's history of present illness;

b. The patient's history of substance use;

c. The patient's social and family history;

d. The patient's past medical and psychiatric histories;

e. A physical examination of the patient;

f. The patient's injection use history, which shall include screening for HIV and hepatitis serology; and

g. Appropriate laboratory tests, which shall include a CBC, a drug screen, and a CMP;

2. Obtain the patient's consent and authorizations in order to obtain the patient's prior medical records.

a. Upon receipt of the medical records, the physician shall review and incorporate the information from the records into the evaluation and treatment of the patient.

b. If the physician is unable, despite best efforts, to obtain the patient's prior medical records, the physician shall document those efforts in the patients chart;

3. Obtain and review a KASPER report for that patient for the twelve (12) month period immediately preceding the initial patient encounter and appropriately utilize that information in the evaluation and treatment of the patient;

4. Explain treatment alternatives and the risks and the benefits of treatment with Buprenorphine-Mono-Product or Buprenorphine-Combined-with-Naloxone to the patient;

5. Obtain written informed consent from the patient in a manner that meets professional standards; and

6. If the patient is a female of child-bearing age and ability, meet the requirements of paragraph (b) of this subsection.

(b) The requirements of this paragraph shall apply to the treatment of a female of child-bearing age and ability.

1. Prior to initiating treatment, the physician shall require that the patient first submit to a pregnancy test and the physician shall provide counseling as to the risk of neonatal abstinence syndrome which shall be consistent with patient education material on neonatal abstinence syndrome from the American Congress of Obstetricians and Gynecologists, American Academy of Pediatrics, American Society of Addiction Medicine and the Kentucky Department for Public Health, and offer means to prevent pregnancy.

2.a. A physician shall not prescribe or dispense Buprenorphine-Mono-Product or Buprenorphine-Combined-with-Naloxone to a patient who is pregnant or breastfeeding unless the

prescribing physician first obtains and documents consultation with another physician for an opinion as to whether the potential benefit of Buprenorphine-Mono-Product or Buprenorphine-Combined-with-Naloxone use outweighs the potential risk of use.

b. The consultation shall be obtained from a physician who is certified by the American Board of Addiction Medicine, the American Board of Medical Specialties (ABMS) in psychiatry, or an American Osteopathic Association (AOA) certifying board in addiction medicine or psychiatry or from an obstetrician or maternal-fetal medicine specialist who is also qualified to prescribe buprenorphine.

(c) While initiating treatment with Buprenorphine-Mono-Product or Buprenorphine-Combined-with-Naloxone, the physician shall comply with the requirements of this paragraph.

1. The physician shall recommend to the patient an in-office observed induction protocol.

a. Except as provided in clause b. of this subparagraph, the physician shall conduct the in-office observed induction protocol.

b. If an in-office observed induction does not occur, the physician shall appropriately record the circumstances in the patient chart and shall implement a SAMHSA-recognized or ASAM-recognized home-based induction protocol.

2. The physician shall document the presence of opioid withdrawal before the first dose is given by using a standardized instrument, such as the clinic opioid withdrawal scale (COWS) or other similarly recognized instrument. **If the patient is transferred from another treatment provider and has previously experienced withdrawal without a relapse, the physician shall document that fact and educate the patient about the potential for precipitated withdrawal.**

3. The physician shall initiate treatment with up to four (4) milligrams, which:

a. May be followed by subsequent doses if withdrawal persists and is not improving; and

b. Shall not exceed a total of sixteen (16) milligrams on the first day of treatment.

(d) After initial induction of Buprenorphine-Mono-Product or Buprenorphine-Combined-with-Naloxone, a physician shall meet the requirements established in this paragraph.

1. If the physician prescribes or dispenses Buprenorphine-Mono-Product or Buprenorphine-Combined-with-Naloxone medication, the physician shall implement a treatment plan that requires objective behavioral modification by the patient. The behavioral modification shall include the patient's participation in a behavioral modification program that may include counseling or a twelve (12) step facilitation.

2. The physician shall prescribe or dispense to the patient an amount of Buprenorphine-Mono-Product or Buprenorphine-Combined-with-Naloxone that:

a. Is necessary to minimize craving and opiate withdrawal;

b. Does not produce opiate sedation;

c. Is to be taken no more frequently than once daily; and

d. Is able only to supply the patient until the next physician visit, which shall be scheduled as required by subparagraph 3. of this paragraph.

3.a. The patient shall be seen by the physician:

(i) No later than ten (10) days after induction and then at intervals of no more than ten (10) days for the first month after induction; and

(ii) At intervals of no more than fourteen (14) days for the second month after induction.

b.(i) If the patient demonstrates objective signs of positive treatment progress, the patient shall be seen by a physician or a qualified physician extender at least once monthly thereafter.

(ii) A physician shall see the patient in shorter intervals if the patient demonstrates any noncompliance with the treatment plan.

c. If extenuating circumstances arise that require a patient to unexpectedly reschedule a physician visit, the prescribing physician shall make best efforts to see the patient as soon as possible and document the circumstances in the patient chart.

4. Every three (3) months after initiation of treatment, the prescribing physician shall evaluate the patient to determine whether the patient's dosage should be continued or modified and shall appropriately document that evaluation and clinical reasoning in the patient's chart.

5. At least once every three (3) months, the prescribing physician shall obtain KASPER reports to help guide the treatment plan.

a. If the KASPER indicates any abnormal findings, the physician shall incorporate those findings into appropriate clinical reasoning to support the continuation or modification of treatment and shall accurately document the same in the patient record.

b. Appropriate clinical reasoning may include adjustment of dose strength or frequency of visits, increased screening, a consultation with a specialist, or an alternative treatment.

c. Every twelve (12) months following initiation of treatment, if a patient's prescribed daily dosage includes more than sixteen (16) milligrams of buprenorphine per day, then the prescribing physician shall refer the patient for consultation by a physician who is certified by the American Board of Addiction Medicine, the American Board of Medical Specialties (ABMS) in psychiatry, or an American Osteopathic Association (AOA) certifying board in addiction medicine or psychiatry for an opinion as to whether continued treatment and dosage is appropriate and shall accurately document the results of that consultation in the patient chart.

d. The physician shall adjust dosages according to the individual patient's condition and within acceptable and prevailing medical standards, with the goal of improving the patient's quality of life and ability to function in the community.

e. Every twelve (12) months following initiation of treatment, the prescribing physician shall evaluate for and document the medical necessity for continued treatment at the established dose.

f. The physician shall obtain at least eight (8) drug screens from the patient within each twelve (12) month period of treatment in order to help guide the treatment plan.

(i) At least two (2) of the drug screens shall be random and shall be coupled with a pill count.

(ii) Each drug screen shall at a minimum screen for buprenorphine, methadone, oxycodone, other opioids, THC, benzodiazepines, amphetamines, and cocaine.

(iii) If a drug screen indicates any abnormal findings, the physician shall incorporate those findings into appropriate clinical reasoning to support the continuation or modification of treatment and shall accurately document the same in the patient record.

(iv) Appropriate clinical reasoning may include adjustment of dose strength or frequency of visits, increased screening, a consultation with a specialist, or an alternative treatment.

6. The physician shall document a plan for handling any lost or stolen medication, which:

a. Shall not provide for the automatic replacement of medication prior to the specified interval date; and

b. Shall require the patient to first report the lost or stolen medications to police or other law enforcement agencies.

Section 3. Violations. Failure to comply with or a violation of the professional standards established in Section 2 of this administrative regulation shall constitute a "departure from, or failure to conform to the standards of acceptable and prevailing medical practice within the Commonwealth of Kentucky," in violation of KRS 311.595(12) and (9), as illustrated by KRS 311.597(4) and may constitute a violation of KRS 311.595(9), as illustrated by KRS 311.597(3), subjecting the licensed physician to sanctions authorized by KRS 311.595.

PRESTON P. NUNNELLEY, M.D., President

APPROVED BY AGENCY: December 12, 2014

FILED WITH LRC: December 15, 2014 at 9 a.m.

CONTACT PERSON: Leanne K. Diakov, General Counsel, Kentucky Board of Medical Licensure, 310 Whittington Parkway, Suite 1B, Louisville, Kentucky 40222, phone (502) 429-7150, fax (502) 429-7118.

REGULATORY IMPACT ANALYSIS AND TIERING STATEMENT

Contact Person: Leanne K. Diakov

(1) Provide a brief summary of:

(a) What this administrative regulation does: This administrative regulation establishes the requirements for prescribing or dispensing Buprenorphine-Mono-Product or Buprenorphine-Combined-with-Naloxone in the Commonwealth of Kentucky.

(b) The necessity of this administrative regulation: It is necessary to promulgate this regulation to establish the requirements for prescribing or dispensing Buprenorphine-Mono-Product or Buprenorphine-Combined-with-Naloxone in the Commonwealth of Kentucky.

(c) How this administrative regulation conforms to the content of the authorizing statutes: This administrative regulation acts specifically to establish the requirements for prescribing or dispensing Buprenorphine-Mono-Product or Buprenorphine-Combined-with-Naloxone in the Commonwealth of Kentucky.

(d) How this administrative regulation currently assists or will assist in the effective administration of the statutes: This administrative regulation acts specifically to establish the requirements for prescribing or dispensing Buprenorphine-Mono-Product or Buprenorphine-Combined-with-Naloxone in the Commonwealth of Kentucky.

(2) If this is an amendment to an existing regulation, provide a brief summary of:

(a) How the amendment will change this existing administrative regulation; Not applicable.

(b) The necessity of the amendment to this administrative regulation; Not applicable.

(c) How the amendment conforms to the content of the authorizing statutes: Not applicable.

(d) How the amendment will assist in the effective administration of the statutes. Not applicable.

(3) List the type and number of individuals, businesses, organizations, or state and local governments affected by this administrative regulation: This amendment will affect all physicians licensed in Kentucky who prescribe or dispense Buprenorphine-Mono-Product or Buprenorphine-Combined-with-Naloxone in the Commonwealth of Kentucky.

(4) Provide an analysis of how the entities identified in question (3) will be impacted by either the implementation of this regulation, if new, or by the change, if it is an amendment, including:

(a) List the actions that each of the regulated entities identified in question (3) will have to take to comply with this administrative regulation or amendment: Physicians will be required to follow the professional standards for prescribing or dispensing Buprenorphine-Mono-Product or Buprenorphine-Combined-with-Naloxone in the Commonwealth of Kentucky.

(b) In complying with this administrative regulation or amendment, how much will it cost each of the entities identified in question (3): There is no cost associated with the requirements of this administrative regulation known to the board.

(c) As a result of compliance, what benefits will accrue to the entities identified in question (3): Benefits to the physician include having professional standards for prescribing or dispensing Buprenorphine-Mono-Product or Buprenorphine-Combined-with-Naloxone which will help curb the prescription drug epidemic in the Commonwealth of Kentucky.

(5) Provide an estimate of how much it will cost the administrative body to implement this administrative regulation:

(a) Initially: None

(b) On a continuing basis: None

(6) What is the source of funding to be used for the implementation and enforcement of this administration regulation: None.

(7) Provide an assessment of whether an increase in fees or funding will be necessary to implement this administrative regulation, if new, or by the change if it is an amendment: No increase of fees or funding will be necessary.

(8) State whether or not this administrative regulation establishes any fees or directly or indirectly increases any fees: This administrative regulation does not establish any fees nor does it directly or indirectly increase any fees.

(9) TIERING: Is tiering applied? Tiering was not appropriate in this administrative regulation because the administrative regulation applies equally to all those individuals regulated by it.

FISCAL NOTE ON STATE OR LOCAL GOVERNMENT

(1) What units, parts or divisions of state or local government (including cities, counties, fire departments, or school districts) will be impacted by this administrative regulation? The Kentucky Board of Medical Licensure will be impacted by this administrative regulation.

(2) Identify each state or federal statute or federal regulation that requires or authorizes the action taken by the administrative regulation. KRS 311.565(1)(a)

(3) Estimate the effect of this administrative regulation on the expenditures and revenues of a state or local government agency (including cities, counties, fire departments, or school districts) for the first full year the administrative regulation is to be in effect. None

(a) How much revenue will this administrative regulation generate for the state or local government (including cities, counties, fire departments, or school districts) for the first year? None

(b) How much revenue will this administrative regulation generate for the state or local government (including cities, counties, fire departments, or school districts) for subsequent years? None

(c) How much will it cost to administer this program for the first year? None

(d) How much will it cost to administer this program for subsequent years? None

Note: If specific dollar estimates cannot be determined, provide a brief narrative to explain the fiscal impact of the administrative regulation.

Revenues (+/-):

Expenditures (+/-):

Other Explanation:

EDUCATION AND WORKFORCE DEVELOPMENT CABINET
Kentucky Board of Education
Department of Education
(Amended After Comments)

705 KAR 4:250. Energy technology engineering career pathway.

RELATES TO: KRS 158.808, 158.810

STATUTORY AUTHORITY: KRS 156.070, 158.808

NECESSITY, FUNCTION, AND CONFORMITY: KRS 158.808 requires the[~~Kentucky~~] Department of Education (department) to establish and administer an energy technology engineering career pathway, approve grant recipients, and distribute funds to local school districts. The Kentucky Board of Education is authorized by KRS 158.808 to promulgate administrative regulations for the administration of that program. This administrative regulation establishes a process for the department[~~Kentucky Board of Education~~] to administer the energy technology engineering career track program, approve grant recipients, and distribute funds to local school districts.

Section 1. Definitions.[~~Definition.~~] (1) "Career pathway **program of study**" is defined in KRS 158.810**(7)[(6)]**[~~means a coherent, articulated sequence of rigorous academic and career and technical courses, including dual credit opportunities, leading to a postsecondary degree or industry-recognized certification or licensure, that is developed, implemented, and maintained in partnership with secondary and postsecondary institutions, businesses, and employers~~].

(2) "Secondary area center" is defined in KRS 158.810(11).

Section 2. Application Process. (1) A Kentucky public school district shall be eligible to apply for a grant through a request for proposal process.

(2) A local school district superintendent shall submit the application and have the approval of participating schools' school-based decision making councils and local board of education.

(3) A grant application shall indicate the fiscal agent as:

(a) A local board of education for all district comprehensive secondary schools and locally-operated secondary area centers; or

(b) The department's Office of Career and Technical Education for all state-operated secondary area centers.

(4) To be eligible for funding, an applicant school shall provide an energy career pathway which includes the following components:

(a) Energy-related applications, including energy and power technology, engineering design and development, and energy-related research and applications as developed by the department in consultation with representatives from the energy technology industry, the University of Kentucky Center for Applied Energy Research, the Council on Postsecondary Education, the Kentucky Community and Technical College System, the Kentucky Department for Energy Development and Independence, and local school districts[~~The Project Lead the Way middle school program Gateway to Technology, with content to include energy-related activities and the following Project Lead the Way pre-engineering courses at the high school level:~~

~~1. Introduction to Engineering Design;~~

~~2. Principles of Engineering;~~

~~3. Digital Electronics;~~

~~4. A specialized course in Energy and Power Technology, or integration of energy-related content and applications in each of the Project Lead the way courses. The content shall include energy-related applications as developed by the Kentucky Department of Education, in consultation with representatives from the energy technology industry, the University of Kentucky Center for Applied Energy Research, the Council on Postsecondary Education, the Kentucky Community and Technical College System, Governor's Office of Energy Policy, local school districts, and Project Lead the Way; and~~

~~5. Engineering Design and Development, with content to include energy-related research and applications~~];

(b) **A curriculum that has been reviewed and is supported by representatives from the energy technology industry and by an institution of higher education as a curriculum that will prepare students for success in either college or career within the energy industry;**

(c) The opportunity for students to participate in energy related internships or cooperative education with energy-related industries or postsecondary education;

(d)[~~(c)~~] Matching funds that shall be allocated to directly support the implementation of the program, which may include other state, federal, local, or nonpublic sources, within the uses and conditions set forth by the source of those funds. Previously awarded energy and engineering initiative[~~Project Lead the Way~~] state grants and local matches shall not be considered as matching funds for this program; and

(e)[~~(d)~~] [~~Status as a registered Project Lead The Way site prior to disbursement of funds; and~~

~~(e)~~] Submission of seven (7) complete copies of the application plus an electronic copy.

Section 3. Selection of Grants. (1) The criteria for selection of applications for funding shall be based on the appropriateness and quality of the following:

(a) Process for identifying potential students and estimated enrollment in the Energy Technology Engineering Career Pathway;

(b) An implementation plan, which includes:

1. Computer availability, including hardware and software commonly used in related fields;

2. Teacher availability and certification;

3. Elementary school integration;

4. Middle school and high school program;

5. Measures of student progress to be utilized;

6. Instructional space;

7. Student Recruitment Plan, including recruitment of traditionally underserved populations;

8. Business and postsecondary partners and other education partnerships; and

9. Narrative of budget and timeline, including the efficient and effective use of proposed grant funds and matching funds;

(c) Program evaluation to include annual graduate follow-up surveys; and

(d) Level of individual school and district commitment for teacher professional development[~~; and~~

~~(e) Narrative of budget and timeline, including the efficient and effective use of proposed grant funds and matching funds~~].

(2) An application shall be reviewed as follows:

(a) A team of evaluators shall review the application; and

(b)[~~1.~~] The department[~~Kentucky Department of Education~~] shall approve funding based upon the results of the review.

(3)[~~2.~~] Consideration may be given to provide for geographic diversity and the number of students to be served in order to maximize the benefits of the program.

Section 4. Grant Allocations and Requirements. (1) The award size or range of grants shall be determined by the department[~~Kentucky Department of Education~~].

(2) Allowable expenditures include:

(a) Laboratory equipment and instructional materials necessary for[~~Project Lead the Way~~] instruction;

(b) Computers and computer upgrades;

(c) Computer software required by the curriculum[~~Project Lead the Way~~];

(d) A laptop computer for the instructor;

(e) Travel expenses and registration fees for teachers and school administrators, including school counselors, to attend[~~the~~] required conferences and trainings[~~Project Lead the Way counselors conference~~];

(f)[~~Travel expenses and registration fees for teachers to attend the required Project Lead the Way summer teacher institutes;~~

~~(g)~~] Resources and professional learning[~~development~~] for integrating energy activities in the curriculum; and

(g)[~~(h)~~] Energy related instructional materials and equipment.

(3) State grant funds shall not be used to maintain, renovate, or build facilities or pay teacher salaries, but local district expenditures for these purposes may be included as matching funds.

(4) Monitoring of awarded grants shall include the following:

(a) Fiscal reports submitted semi-annually[~~quarterly~~] to the department[~~of Education~~]; and

(b) Annual program evaluation report on the implementation plan that outlines the project accomplishments related to the project need, objectives, and outcomes.

This is to certify that the chief state school officer has reviewed and recommended this administrative regulation prior to its adoption by the Kentucky Board of Education, as required by KRS 156.070(5).

TERRY HOLLIDAY, Ph.D., Commissioner
ROGER L. MARCUM, Chairperson

APPROVED BY AGENCY: December 15, 2014

FILED WITH LRC: December 15, 2014 at 10 a.m.

CONTACT PERSON: Kevin C. Brown, Associate Commissioner and General Counsel, Kentucky Department of Education, 500 Mero Street, First Floor, Capital Plaza Tower, Frankfort, Kentucky 40601, phone 502-564-4474, fax 502-564-9321.

REGULATORY IMPACT ANALYSIS AND TIERING STATEMENT

Contact Person: Kevin C. Brown

(1) Provide a brief summary of:

(a) What this administrative regulation does: This administrative regulation establishes the processes to be followed by the agency when administering the energy technology engineering career track program, approving grant recipients, and

distributing the funds to local districts.

(b) The necessity of this administrative regulation: This administrative regulation was necessary to implement provisions of KRS 158.808 that required the agency to establish an energy and engineering technology career track program and distribute funds to local school districts that wish to implement such career pathways.

(c) How this administrative regulation conforms to the content of the authorizing statute: This administrative regulation provides criteria for the grant application process, as well as guidance surrounding proper implementation plans and data reporting procedures.

(d) How this administrative regulation currently assists or will assist in the effective administration of the statutes: This administrative regulation provides specifics on how to apply for the implementation and sustainability funds outlined in KRS 158.808 that are available to districts that offer these pathways at the middle and high school levels.

(2) If this is an amendment to an existing administrative regulation, provide a brief summary of:

(a) How the amendment will change this existing administrative regulation: The amendments would ensure equitable access to the grant funds, regardless of the district's chosen pathway curriculum. Vendor-specific language within the original form of the administrative regulation has been removed, as this decision should be made based upon the needs of the specific school and the local industry.

(b) The necessity of the amendment to this administrative regulation: As new and emerging secondary programs are developed around the STEM (Science, Technology, Engineer and Technology) fields, and these programs continue to grow in popularity and demand, the need has become evident to provide greater accessibility to these grant funds.

(c) How the amendment conforms to the content of the authorizing statute: The amendments maintain the integrity of the grant application process, as well as the implementation and data reporting procedures.

(d) How the amendment will assist in the effective administration of the statutes: The amendments seek to promote and increase participation in these career pathways through the financial support of the grant funds.

(3) List the type and number of individuals, businesses, organizations, or state and local governments affected by this administrative regulation: All public school districts and state-operated area technology centers in Kentucky that offer energy and engineering technology career pathways.

(4) Provide an analysis of how the entities identified in question (3) will be impacted by either the implementation of this administrative regulation, if new, or by the change, if it is an amendment, including: The administrative regulation will impact identified schools and districts by providing the detail necessary to apply for the grant funding outlined in KRS 158.808.

(a) List the actions that each of the regulated entities identified in question (3) will have to take to comply with this administrative regulation or amendment: School districts wishing to apply for such funds must submit a formal application that adheres to the requirements outlined in the administrative regulation. They must also comply with the implementation and sustainability plans, as well as accurate and timely data reporting requirements.

(b) In complying with this administrative regulation or amendment, how much will it cost each of the entities identified in question (3): The chosen school districts to be awarded the grant funds are required to find matching funds, allocated directly to support the implementation of the program. The number of awardees and the award amounts are determined each year by the agency.

(c) As a result of compliance, what benefits will accrue to the entities identified in question (3): This administrative regulation will benefit school districts by ensuring that all who desire to offer such pathways have the same access and opportunity to apply for these implementation and sustainability funds, regardless of what program or curriculum vendor they choose.

(5) Provide an estimate of how much it will cost the administrative body to implement this administrative regulation:

(a) Initially: No additional costs

(b) On a continuing basis: No additional costs

(6) What is the source of the funding to be used for the implementation and enforcement of this administrative regulation: General funds

(7) Provide an assessment of whether an increase in fees or funding will be necessary to implement this administrative regulation, if new, or by the change if it is an amendment: No increase will be necessary.

(8) State whether or not this administrative regulation establishes any fees or directly or indirectly increases any fees: This administrative regulation does not establish fees or directly or indirectly increase any fees.

(9) TIERING: Is tiering applied? Tiering was not appropriate in this administrative regulation because the administrative regulation applies equally to all school districts that offer these pathways.

FISCAL NOTE ON STATE OR LOCAL GOVERNMENT

(1) What units, parts, or divisions of state or local government (including cities, counties, fire departments, or school districts) will be impacted by this administrative regulation? All Kentucky school districts

(2) Identify each state or federal statute or federal regulation that requires or authorizes the action taken by the administrative regulation. KRS 158.808, KRS 158.810

(3) Estimate the effect of this administrative regulation on the expenditures and revenues of a state or local government agency (including cities, counties, fire departments, or school districts) for the first full year the administrative regulation is to be in effect.

(a) How much revenue will this administrative regulation generate for the state or local government (including cities, counties, fire departments, or school districts) for the first year? N/A

(b) How much revenue will this administrative regulation generate for the state or local government (including cities, counties, fire departments, or school districts) for subsequent years? N/A

(c) How much will it cost to administer this program for the first year? No additional costs from previous years.

(d) How much will it cost to administer this program for subsequent years? No additional costs for subsequent years.

Note: If specific dollar estimates cannot be determined, provide a brief narrative to explain the fiscal impact of the administrative regulation.

Revenues (+/-):

Expenditures (+/-):

Other Explanation:

CABINET FOR HEALTH AND FAMILY SERVICES
Department for Public Health
Division of Epidemiology and Health Planning
(Amended After Comments)

902 KAR 2:020. Reportable disease surveillance.

RELATES TO: KRS 211.180(1), 214.010, 214.645, 333.130

STATUTORY AUTHORITY: KRS 194A.050, 211.090(3), 211.180(1)**, 214.010**[~~EO 2004-726~~]

NECESSITY, FUNCTION, AND CONFORMITY:[~~EO 2004-726, effective July 9, 2004, reorganized the Cabinet for Health and Family Services and placed the Department for Public Health under the Cabinet for Health and Family Services.~~] KRS 211.180(1) requires the cabinet to implement a statewide program for the detection, prevention, and control of communicable diseases, chronic and degenerative diseases, dental diseases and abnormalities, occupational diseases and health hazards peculiar to industry, home accidents and health hazards, animal diseases which are transmissible to man, and other diseases and health hazards that may be controlled. KRS 214.010 requires every physician, advanced practice registered nurse, and every head of

family to notify the local health department of the existence of diseases and conditions designated by administrative regulation of the cabinet[~~of public health importance, known to him or her~~]. This administrative regulation establishes notification standards and specifies the diseases requiring immediate, urgent, priority, [~~or~~] routine, or general notification, in order to facilitate rapid public health action to control diseases, and to permit an accurate assessment of the health status of the Commonwealth.

Section 1. Definitions. (1) "Authorize" means to confer rights to the Kentucky Department for Public Health in the NHSN database at the healthcare facility level.

(2)[~~**"HAI outbreak" means:**~~

~~**(a) The occurrence of two (2) or more HAIs that are epidemiologically linked or connected by person, place, or time; or**~~

~~**(b) A single case of an HAI not commonly diagnosed such as a postsurgical group A Streptococcus infection or healthcare-associated Legionella infection.**~~

~~**(3)**~~] "Health facility" **is defined by KRS 216B.015(13)**[~~**means:**~~

~~**(a) A facility licensed under 902 KAR Chapter 20 and required by the Centers for Medicare and Medicaid Services (CMS) to report an HAI event or healthcare personnel influenza vaccination information to CMS using the National Healthcare Safety Network; or**~~

~~**(b) A facility licensed under KRS Chapter 216B**~~]**.**

(3)[~~**(4)**~~] "Health professional" means a professional licensed under KRS Chapters 311 through 314.

(4)[~~**(5)**~~] "Healthcare-associated infection" or "HAI" means an infection acquired by a person while receiving treatment for a separate condition in a health care setting.

(5)[~~**(6)**~~] "HIV case report" means an HIV infection or AIDS diagnosis which:

(a) Has been confirmed by laboratory test results; or

(b) Meets the definition of AIDS established within the Centers for Disease Control and Prevention (CDC) guidelines.

(6)[~~**(7)**~~] "Kentucky Department for Public Health Advisory" means a notification to health professionals, health facilities, and laboratories subject to this administrative regulation identifying a new health threat that warrants reporting through the procedures of this administrative regulation.

(7)[~~**(8)**~~] "Medical laboratory" is defined by KRS 333.020**(3)**[~~**(2)**~~]**.**

(8)[~~**(9)**~~] "National Healthcare Safety Network" or "NHSN" means the nation's most widely used healthcare-associated infection (HAI) tracking system as provided to medical facilities by the Centers for Disease Control and Prevention.

(9)[~~**(10)**~~] "National reference laboratory" means a laboratory located outside of Kentucky which has been contracted by a Kentucky health professional, laboratory, or healthcare facility to provide laboratory testing.

(10)[~~**(11)**~~] "Outbreak" means**:**

(a) Two (2) or more cases**, including HAIs,** that are epidemiologically linked or connected by person, place, or time**; or**

(b) A single case of an HAI not commonly diagnosed.

(11)[~~**(12)**~~] "Pharmacist" means a professional licensed under KRS 315.010.

(12)[~~**(13)**~~] "Select agent" means a biological agent or toxin that could pose a severe threat to public health, plant health, animal product, or plant product as determined by the National Select Agent Registry (NSAR) at www.selectagents.gov.

(13)[~~**(14)**~~] "Veterinarian" means a professional licensed under KRS 321.181.

Section 2. Notification Standards. (1) Health Professionals and Facilities. A health professional and a health facility shall give notification if:

(a) The health professional makes a probable diagnosis of a disease specified in Section 3, 5, 6, 7, 8, 10, 13, 14, 15, or 16 of this administrative regulation; and

(b) The diagnosis is supported by:

1.a. Clinical or laboratory criteria; and

b. Case classifications published by the Centers for Disease Control and Prevention at wwwn.cdc.gov/nndss; or

2. A health professional's medical opinion that the disease is present.

(2) A single report by a health facility of a condition diagnosed by a test result from the health facility's laboratory shall constitute notification on behalf of the health facility and its laboratory.

(3) A health facility may designate an individual to report on behalf of the health facility's laboratory, pharmacy, and the health facility's other clinical entities.

(4) Notification shall be given to the local health department serving the jurisdiction in which the patient resides.

(5) If the local health department cannot be reached, notification shall be given to the Kentucky Department for Public Health.

(6) The reporting health professional shall furnish:

(a) Information required in Section 4(16) of this administrative regulation; and

(b) Clinical, epidemiologic, and laboratory information pertinent to the disease including sources of specimens submitted for laboratory testing.

(7) Medical Laboratories. Upon a laboratory test result which indicates infection with an agent associated with one (1) or more of the diseases or conditions specified in Section 3, 5, 6, 7, 8, 10, 13, 14 15, or 16 of this administrative regulation, the laboratory shall report the result to the local health department serving the county in which the patient resides.

(8) If the local health department cannot be reached, notification shall be given to the Kentucky Department for Public Health.

(9) The reporting laboratory shall furnish the information required in Section 4(16) of this administrative regulation.

(10) National Reference Laboratories. Upon a test result performed by a national reference laboratory which indicates infection with an agent associated with one (1) or more of the diseases or conditions specified in Section 3, 5, 6, 7, 8, 10, 13, 14, 15, or 16 of this administrative regulation, the director of a medical laboratory, a health facility, or the health professional that referred the test to the national reference laboratory shall[~~**be responsible to**~~] ensure that the result is reported **by the national reference laboratory** to the local health department serving the jurisdiction in which the patient resides.

(11) If the local health department cannot be reached, notification shall be given to the Kentucky Department for Public Health.

(12) The report shall include the information required by Section 4(16) of this administrative regulation.

Section 3. Submission of Specimens to the Kentucky Department for Public Health Division of Laboratory Services. (1) A medical laboratory and a national reference laboratory in receipt of diagnostic specimens originating from the Commonwealth of Kentucky shall send specimens or clinical isolates for diseases outlined in subsection (5) of this section to the Division of Laboratory Services for primary or confirmatory testing and related studies.

(2) A medical laboratory or national reference laboratory using non-culture techniques to identify bacterial agents of diarrheal disease, such as enzyme immunoassays (EIAs) or molecular assays, shall attempt isolation of the etiologic agent identified. Clinical isolates shall be submitted to the Division of Laboratory Services.

(3) If the culture attempts do not produce a clinical isolate, the direct specimen, submitted in the appropriate preservative, shall be sent to the Division of Laboratory Services. A submitting laboratory shall **provide**[~~**be responsible for providing**~~] the name of the etiologic agent detected by the non-culture technique at the time of specimen submission.

(4) A medical laboratory performing this test shall continue to follow the state's requirement for the submission of appropriate materials to the state public health laboratory.

(5) A medical or national reference laboratory shall submit clinical isolates or, if not available, the direct specimen from the following diseases to the Division of Laboratory Services:

(a) Botulism;

(b) Brucellosis;
(c) Campylobacteriosis;
(d) Cholera and diseases caused by other Vibrio species;
(e) Diphtheria;
(f) Escherichia coli O157:H7;
(g) Hemolytic Uremic Syndrome (HUS) – Post Diarrheal;
(h) Listeriosis;
(i) Measles;
(j) Meningococcal infections;
(k) Rabies animal;
(l) Rubella;
(m) Salmonellosis;
(n) Shiga toxin-producing E. coli (STEC);
(o) Shigellosis;
(p) Tuberculosis;
(q) Tularemia; and
(r) Typhoid fever.

Section 4. Reporting Classifications and Methods. (1) Immediate reporting. A report required by Section 10**(1) and (2)** of this administrative regulation to be made immediately shall be:
(a) Made by telephone to the local health department serving the county in which the patient resides; and
(b) Followed up by electronic or fax submission to the local health department serving the county in which the patient resides within one (1) business day.
(2) Upon receipt of a report for a disease requiring immediate reporting, the local health department shall:
(a) Notify the Kentucky Department for Public Health by telephone; and
(b) Assist the department in carrying out a public health response.
(3) Weekend, evening, or holiday immediate notification. If local health department personnel cannot be contacted directly, notification shall be made by telephone using an emergency number provided by the local health department or the Kentucky Department for Public Health.
(4) For the protection of patient confidentiality, a report using the emergency number shall include:
(a) The name of the condition being reported; and
(b) A telephone number that can be used by the department to contact the reporting health professional or health facility.
(5) Urgent Reporting. A report made within twenty-four (24) hours as required by Section 5 of this administrative regulation shall be:
(a) Submitted electronically, by fax, or by telephone to the local health department serving the county in which the patient resides; and
(b) If submitted by telephone, followed up by electronic or fax submission to the local health department serving the county in which the patient resides within one (1) business day.
(6) Upon receipt of a report for a disease requiring urgent reporting, the local health department shall:
(a) Notify the Kentucky Department for Public Health; and
(b) Assist the department in carrying out a public health response.
(7) Weekend, evening, or holiday urgent notification. If local health department personnel cannot be contacted directly, notification shall be made by telephone using an emergency number provided by the local health department or the Kentucky Department for Public Health.
(8) For the protection of patient confidentiality, notification using the emergency number shall include:
(a) The name of the condition being reported; and
(b) A telephone number that can be used by the department to contact the reporting health professional or health facility.
(9) Priority Reporting. A report made within one (1) business day as required by Sections 6, 14(4), and 15 of this administrative regulation shall be:
(a) Submitted electronically, by fax, or by telephone to the local health department serving the county in which the patient resides; and
(b) If submitted by telephone, followed up by electronic or fax submission of a report to the local health department serving the county in which the patient resides within one (1) business day.
(10) Upon receipt of a report for a disease requiring priority reporting, a local health department shall:
(a) Investigate the report and carry out public health protection measures; and
(b) Notify the Kentucky Department for Public Health of the case by electronic or fax submission within one (1) business day.
(11) The reporting health department may seek assistance in carrying out public health measures from the Kentucky Department for Public Health.
(12) Routine Reporting. A report made within five (5) business days, as required by Sections 7, 8, 9, **11(1),** 13, 14(7), and 17 of this administrative regulation, shall be made electronically, by fax, or by mail to the local health department serving the county in which the patient resides.
(13) Upon receipt of a report of a disease or condition requiring routine reporting, a local health department shall:
(a) Make a record of the report;
(b) Answer inquiries or render assistance regarding the report if requested by the reporting entity; and
(c) Forward the report to the Kentucky Department for Public Health by electronic or fax submission of a report, or in writing within five (5) business days.
(14) General Reporting. A report made within three (3) months, as required by Section 16 of this administrative regulation, shall be made electronically, by fax, or by mail.
(15) A report submitted by fax or by mail shall be made using one (1) of the following reporting forms:
(a) EPID 200, Kentucky Reportable Disease Form;
(b) EPID 250, Kentucky Reportable MDRO Form**, until electronic reporting is available pursuant to Section 9(1) of this administrative regulation**;
(c) EPID 394, Kentucky Reportable Disease Form, Hepatitis Infection in Pregnant Women or Child (under the age of five);
(d) EPID 399, Perinatal Hepatitis B Prevention Form for Infants;
(e) Adult HIV/AIDS Confidential Case Report form; or
(f) Pediatric HIV/AIDS Confidential Case Report form.
(16) Information to be reported. Except as provided in subsections (3) and (7) of this section, a report required by this administrative regulation shall include:
(a) Patient name;
(b) Date of birth;
(c) Gender;
(d) Race;
(e) Ethnicity;
(f) Patient address;
(g) County of residence;
(h) Patient telephone number;
(i) Name of the reporting medical provider or facility;
(j) Address of the reporting medical provider or facility; and
(k) Telephone number of the reporting medical provider or facility**.**
(17) A reporting health professional shall furnish the information listed in subsection (16) of this section and Section 2(6)(b) of this administrative regulation.[;]

Section 5. Notifiable Infectious Conditions Requiring Urgent Notification. Notification of the following diseases shall be considered urgent and shall be made within twenty-four (24) hours:
(1) Anthrax;
(2) Botulism;
(3) Brucellosis (multiple cases, temporally or spatially clustered);
(4) Diphtheria;
(5) Hepatitis A, acute;
(6) Measles;
(7) Meningococcal infections;
(8) Novel influenza A virus infections;
(9) Plague;
(10) Poliomyelitis;
(11) Rabies, animal;

(12) Rabies, human;
(13) Rubella;
(14) Severe Acute Respiratory Syndrome-associated Coronavirus (SARS-CoV) disease;
(15) Smallpox;
(16) Tularemia;
(17) Yellow fever; and
(18) Viral hemorrhagic fevers due to:
(a) Crimean-Congo Hemorrhagic Fever virus;
(b) Ebola virus;
(c) Lassa virus;
(d) Lujo virus;
(e) Marburg virus; or
(f) New world arenaviruses including:
1. Guanarito virus;
2. Junin virus,
3. Machupo virus; and
4. Sabia virus.

Section 6. Notifiable Infectious Conditions and Notifiable Non-Infectious Conditions Requiring Priority Notification. Notification of the following diseases shall be considered priority and shall be made within one (1) business day:
(1) Arboviral diseases, neuroinvasive and non-neuroinvasive, including:
(a) California serogroup virus diseases, including diseases caused by:
1. California encephalitis virus;
2. Jamestown Canyon virus;
3. Keystone virus;
4. La Crosse virus;
5. Snowshoe hare virus; and
6. Trivittatus viruses;
(b) Chikungunya virus disease;
(c) Eastern equine encephalitis virus disease;
(d) Powassan virus disease;
(e) St. Louis encephalitis virus disease;
(f) Venezuelan equine encephalitis disease;
(g) West Nile virus disease; and
(h) Western equine encephalitis virus disease;
(2) Brucellosis (cases not temporally or spatially clustered);
(3) Campylobacteriosis;
(4) Cholera;
(5) Cryptosporidiosis;
(6) Dengue virus infections;
(7) Escherichia coli O157:H7;
(8) Foodborne disease outbreak;
(9) Haemophilus influenzae invasive disease;
(10) Hansen's disease (leprosy);
(11) Hantavirus infections;
(12) Hemolytic uremic syndrome (HUS), post-diarrheal;
(13) Hepatitis B, acute;
(14) Hepatitis B infection in a pregnant woman;
(15) Hepatitis B infection in an infant or a child aged five years or less;
(16) Newborns born to Hepatitis B positive mothers at the time of delivery;
(17) Influenza-associated mortality in a pregnant woman;
(18) Influenza-associated pediatric mortality;
(19) Listeriosis;
(20) Mumps;
(21) Norovirus outbreak;
(22) Pertussis;
(23) Pesticide-related illness, acute;
(24) Psittacosis;
(25) Q fever;
(26) Rabies post exposure prophylaxis;
(27) Rubella, congenital syndrome;
(28) Salmonellosis;
(29) Shiga toxin-producing E. coli (STEC);
(30) Shigellosis;
(31) Streptococcal toxic-shock syndrome;
(32) Streptococcus pneumoniae, invasive disease;
(33) Tetanus;
(34) Toxic-shock syndrome (other than Streptococcal);
(35) Tuberculosis;
(36) Typhoid fever;
(37) Varicella-associated mortality;
(38) Vibriosis; and
(39) Waterborne disease outbreak.

Section 7. Notifiable Infectious Conditions and Notifiable Non-Infectious Conditions Requiring Routine Notification. Notification of the following diseases shall be considered routine and shall be made within five (5) business days:
(1) Babesiosis;
(2) Coccidioidomycosis;
(3) Creutzfeldt-Jakob disease;
(4) Ehrlichiosis/Anaplasmosis;
(5) Hepatitis C, acute;
(6) Hepatitis C infection in a pregnant woman;
(7) Hepatitis C infection in an infant or a child aged five years or less;
(8) Newborns born to Hepatitis C positive mothers at the time of delivery;
(9) Histoplasmosis;
(10) Lead poisoning;
(11) Legionellosis;
(12) Lyme Disease;
(13) Malaria;
(14) Spotted Fever Rickettsiosis (Rocky Mountain Spotted Fever);
(15) Toxoplasmosis; and
(16) Trichinellosis (Trichinosis).

Section 8. Notifiable Infectious Conditions Requiring Routine Notification by Electronic Laboratory Reporting. (1) Beginning October 1, 2016, notification of the following diseases shall be considered routine and shall be electronically reported to the Kentucky Department for Public Health through the Kentucky Health Information Exchange within five (5) business days:
(a) Cyclosporiasis;
(b) Giardiasis;
(c) Hepatitis B laboratory test results whether reported as positive or negative;
(d) Hepatitis C laboratory test results whether reported as positive or negative; and
(e) Varicella laboratory test results reported as positive for:
1. Isolation of varicella virus from a clinical specimen;
2. Varicella antigen detected by direct fluorescent antibody test;
3. Varicella-specific nucleic acid detected by polymerase chain reaction (PCR); or
4. A significant rise in serum anti-varicella immunoglobulin G (IgG) antibody level by a standard serologic assay.
(2) Reports made pursuant to this section shall include a diagnosis.

Section 9. Multi-Drug Resistant Organisms and Other Organisms Requiring Routine Notification by Electronic Laboratory Reporting.
(1) Beginning October 1, 2016, notification of the following diseases shall be considered routine and shall be electronically reported to the Kentucky Department for Public Health through the Kentucky Health Information Exchange within five (5) business days:
(a) Vancomycin-intermediate Staphylococcus aureus (VISA), which includes S. aureus cultured from any specimen that the results show a minimum inhibitory concentration (MIC) of 4-8 μg/mL per standard laboratory methods;
(b) Vancomycin-resistant Staphylococcus aureus (VRSA), which includes S. aureus cultured from any specimen that the results show a minimum inhibitory concentration (MIC) of greater than or equal to 16 μg/mL per standard laboratory methods;
(c) Methicillin-resistant Staphylococcus aureus (MRSA), which includes S. aureus cultured from any specimen that tests oxacillin-

resistant, cefoxitin-resistant, or methicillin-resistant by standard susceptibility testing methods, or by a laboratory test that is FDA-approved for MRSA detection from isolated colonies. These methods may also include a positive result by any FDA-approved test for MRSA detection;

(d) Vancomycin-resistant Enterococcus species (VRE), regardless of whether identified to the species level, that is resistant to Vancomycin by standard susceptibility testing methods or by results from any FDA-approved test for VRE detection from specific specimen sources;

(e) Clostridium difficile (C. difficile) identified from a positive laboratory test result for a C. difficile toxin A or B (includes molecular assays {PCR} or toxin assays) or a toxin-producing organism detected by culture or other laboratory means performed on a stool sample;

(f) Carbapenem-resistant Enterobacteriaceae (CRE) or any Enterobacteriaceae species testing non-susceptible (resistant or intermediate) to imipenem, meropenem, or doripenem, by standard susceptibility testing methods and resistant to all third-generation cephalosporins tested;

(g) Extended–spectrum beta-lactamase Gram negative organisms (ESBL) Enterobacteriaceae species non-susceptible (resistant or intermediate) to ceftazidime, cefepime, ceftriaxone, or cefotaxime;

(h) Multidrug-resistant – Acinetobacter - Non-susceptibility (resistant or intermediate) to at least one (1) agent in at least three (3) antimicrobial classes of the following six (6) classes:

1. Ampicillin-sulbactam;
2. Cephalosporins (cefepime, ceftazidime);
3. β-lactam-β-lactamase inhibitor combination (piperacillin, piperacillin-tazobactam);
4. Carbapenems (imipenem, meropenem, doripenem);
5. Fluoroquinolones (ciprofloxacin or levofloxacin); **and**
6. Aminoglycosides (gentamicin, tobramycin, or amikacin); **and**

(i) Multidrug-resistant Pseudomonas - Non-susceptibility, resistant or intermediate, to at least one (1) agent in at least three (3) antimicrobial classes of the following five (5) classes:

1. Cephalosporins (cefepime, ceftazidime);
2. β-lactam-β-lactam β-lactamase inhibitor combination (piperacillin, piperacillin-tazobactam);
3. Carbapenems (imipenem, meropenem, doripenem);
4. Fluoroquinolones (ciprofloxacin or levofloxacin);
5. Aminoglycosides (gentamicin, tobramycin, or amikacin).

(2) The report of an organism under this section shall include the following:

(a) Date of specimen collection;
(b) Source of specimen;
(c) Susceptibility pattern; and
(d) Name of the ordering health professional.

(3) Upon a test result performed by a medical laboratory which indicates infection with an agent associated with one (1) or more of the diseases or conditions or a multi-drug resistant organism specified in this section, the director of the medical laboratory shall electronically report the result to the Kentucky Department for Public Health through the Kentucky Health Information Exchange **within five (5) days**.

(4) The report shall include a diagnosis.

Section 10. Newly Recognized Infectious Agents, HAI Outbreaks, Emerging Pathogens, and Pathogens of Public Health Importance.

(1)The following shall be reported immediately by telephone to the Kentucky Department for Public Health:

(a) A suspected incidence of bioterrorism caused by a biological agent;
(b) Submission of a specimen to the Kentucky Division of Laboratory Services for select agent identification or select agent confirmation testing; or
(c) An outbreak of a disease or condition that resulted in multiple hospitalizations or death.

(2) An unexpected pattern of cases, suspected cases, or deaths which may indicate the following shall be reported immediately by telephone to the local health department in the county where the health professional is practicing or where the facility is located:

(a) A newly-recognized infectious agent;
(b) An outbreak;
(c) An emerging pathogen which may pose a danger to the health of the public;
(d) An epidemic; or
(e) A non-infectious chemical, biological, or radiological agent.

(3) A report of the following shall be considered priority and shall be reported to the local health department in the county where the health professional is practicing or where the facility is located within one (1) business day:

(a) Suspected Staphylococcal or other foodborne intoxication; or
(b) Salmonellosis or other foodborne or waterborne infection.

(4) The local health department shall:

(a) Investigate the outbreak or occurrence;
(b) Carry out public health protection measures to address the disease or condition involved; and
(c) Make medical and environmental recommendations to prevent future similar outbreaks or occurrences.

(5) The local health department may seek assistance from the Kentucky Department for Public Health.

Section 11. Laboratory Surveillance. (1) Medical or national reference laboratory results for the following shall be **considered routine**[~~**reported weekly**~~]:

(a) Influenza virus isolates;
(b) PCR-positive test results for influenza virus; and
(c) DNA molecular assays for influenza virus.

(2) The report shall include specific laboratory information pertinent to the result.

(3) Upon request by the Kentucky Department for Public Health, a health facility laboratory or a medical laboratory shall report the number of clinical isolates and information regarding the antimicrobial resistance patterns of the clinical isolates at intervals no less frequently than three (3) months for the following:

(a) Staphylococcus aureus;
(b) Enterococcus species; or
(c) An organism specified in a request that includes a justification of its public health importance.

Section 12. Healthcare-Associated Infection Surveillance. (1) A healthcare facility in Kentucky that participates in CMS reporting programs shall authorize the CDC to allow the Kentucky Department for Public Health to access health care-associated infection data reported to NHSN.

(2) The Kentucky Department for Public Health shall preserve patient confidentiality and shall not disclose to the public any patient-level data obtained from any health care facility.

(3) The Kentucky Department for Public Health may issue reports to the public regarding healthcare-associated infections in aggregate data form which:

(a) May identify individual health care facilities; and
(b) Shall comply with methodology developed by the CDC and CMS for national reporting of health care-associated infections.

(4) The Kentucky Department for Public Health may evaluate healthcare-associated infection data for accuracy and completeness.

Section 13. Human Immunodeficiency Virus (HIV) and Acquired Immunodeficiency Syndrome (AIDS) Surveillance. (1) A report of an HIV infection or AIDS diagnosis shall be considered routine and shall be reported within five (5) business days of diagnosis on one (1) of the following forms:

(a) Adult HIV/AIDS Confidential Case Report form; or
(b) Pediatric HIV/AIDS Confidential Case Report form.

(2) Health professionals and medical laboratories shall report:

(a) A positive test result for HIV infection including a result from:

1. 3rd generation immunoassay;
2. 4th generation immunoassay;
3. Western Blot;

4. PCR;
5. HIV-1 or HIV-2 differentiating such as Multispot;
6. HIV antigen;
7. HIV antibody;
8. CD4+ assay including absolute CD4+ cell counts and CD4+%;
9. HIV Viral Load Assay including detectable and undetectable values; or
10. A positive confirmatory serologic test result for HIV infection; or
(b) A diagnosis of AIDS that meets the definition of AIDS established within the CDC guidelines.
(3) A case report for a resident of Jefferson, Henry, Oldham, Bullitt, Shelby, Spencer, or Trimble County shall be submitted to the HIV/AIDS Surveillance Program of the Louisville-Metro Health Department.
(4) A case report for a resident of the remaining Kentucky counties shall be submitted to the HIV/AIDS Surveillance Program of the Kentucky Department for Public Health, Division of Epidemiology and Health Planning.
(5) A case report for a person with an HIV infection without a diagnosis of AIDS shall include the following information:
(a) The patient's full name;
(b) The patient's complete address;
(c) Date of birth using the format MMDDYYYY;
(d) Gender;
(e) Race;
(f) Ethnicity;
(g) Risk factor as identified by CDC;
(h) County of residence;
(i) Name of provider and facility submitting report including contact information;
(j) Specimen collected;
(k) Date and type of HIV test performed using the format MMDDYYYY;
(l) Results of CD4+ cell counts and CD4+%;
(m) Results of viral load testing;
(n) Results of PCR, HIV culture, HIV antigen, and HIV antibody, if performed;
(o) Results of TB testing, if available; and
(p) HIV status of the person's partner, spouse, or children, as applicable.
(6) A reports of an AIDS case shall include:
(a) Information in subsections (2) through (5) of this section;
(b) Opportunistic infections diagnosed; and
(c) Date of onset of illness.
(7) A report of AIDS shall be made whether or not the patient has been previously reported as having an HIV infection.
(8) If the patient has not been previously reported as having an HIV infection, the AIDS report shall also serve as the report of HIV infection as required by subsection (2) through (5) of this section.

Section 14. Sexually Transmitted Disease (STD). (1)**[~~A health professional or a health facility shall give~~]** Notification **of[if]** a probable diagnosis of an STD **as** specified in subsection (4) or (7) of this section **shall be[~~is~~]** made.
(2) The report shall provide the following information:
(a) Pregnancy status; and
(b) Clinical, epidemiologic, laboratory, and treatment information pertinent to the disease.
(3) Upon a laboratory test result which indicates infection with an agent associated with one (1) or more of the diseases or conditions specified in subsection (4) and (7) of this section, a medical laboratory shall report to the Kentucky Department for Public Health information required by Section 4(16) of this administrative regulation.
(4) Sexually Transmitted Diseases Requiring Priority Notification. A report of the following shall be considered priority and shall be made within one (1) business day:
(a) Congenital syphilis; or
(b) Syphilis - primary, secondary, or early latent.
(5) Upon receipt of a report for a disease or condition specified in subsection (4) of this section, a local health department shall:
(a) Investigate the report;
(b) Carry out public health protection measures to address the disease or condition; and
(c) Forward the report to the Kentucky Department for Public Health within one (1) business day.
(6) The local health department may seek assistance from the Kentucky Department for Public Health.
(7) Sexually Transmitted Diseases Requiring Routine Notification. A report of the following shall be considered routine and shall be made**[~~by a health professional or medical laboratory~~]** within five (5) business days**[~~to the local health department serving the county in which the patient resides~~]**:
(a) Chancroid;
(b) Chlamydia trachomatis infection;
(c) Gonorrhea;
(d) Granuloma inguinale;
(e) Lymphogranuloma venereum; or
(f) Syphilis, other than primary, secondary, early latent, or congenital.
(8) Upon receipt of a report for a disease or condition specified in subsection (7) of this section, a local health department shall:
(a) Make a record of the report using Form EPID 200, Kentucky Reportable Disease Form;
(b) Forward the report to the Kentucky Department for Public Health within five (5) business days; and
(c) Render assistance if requested by the reporting entity or the Kentucky Department for Public Health.

Section 15. Tuberculosis. (1) A pharmacist shall give notice if two (2) or more of the following medications used for the initial treatment of active tuberculosis are dispensed to an inpatient in a health facility or to an ambulatory patient in a health facility or a pharmacy:
(a) Rifampin or rifabutin;
(b) Isoniazid;
(c) Pyrazinamide; and
(d) Ethambutol.
(2) A report of tuberculosis shall be considered priority and shall be reported to the local health department serving the county in which the patient resides.
(3) If the local health department cannot be reached, notification shall be given to the Kentucky Department for Public Health.
(4) The report shall include:
(a) Information required in Section 4(16) of this administrative regulation; and
(b) Names of the medications dispensed.

Section 16. Asbestosis, Coal Worker's Pneumoconiosis, and Silicosis. (1) A health professional shall report a diagnosis of the following to the Kentucky Department for Public Health within three (3) months of diagnosis:
(a) Asbestosis;
(b) Coal worker's pneumoconiosis; or
(c) Silicosis.
(2) A report required under this section shall include the following information regarding the patient:
(a) Name;
(b) Address;
(c) Date of birth; and
(d) County of residence.

Section 17. Reporting of Communicable Diseases in Animals. (1) A diagnosis in an animal of a condition known to be communicable to humans, except for rabies, shall require routine notification.
(2) A veterinarian shall report the diagnosis within five (5) business days to the local health department serving the county in which the animal is located.
(3) If a laboratory test indicates infection of an animal with an agent associated with a condition known to be communicable to humans, the director of a medical laboratory shall report the result to the local health department serving the county in which the

animal is located within five (5) business days.

(4) The local health department receiving the report shall:

(a) Investigate the report;

(b) Carry out public health protection measures for the control of communicable diseases; and

(c) Forward the report to the Kentucky Department for Public Health within five (5) business days.

(5) The local health department may seek assistance from the Kentucky Department for Public Health.

Section 18. Kentucky Department for Public Health Advisory. (1) If the Secretary of the Cabinet for Health and Family Services or the Commissioner of the Department for Public Health determines that a disease not presently listed in this administrative regulation requires reporting, the secretary or commissioner may issue a Kentucky Public Health Advisory.

(2) The Kentucky Public Health Advisory shall include:

(a) Date and time the advisory is issued;

(b) A unique number to identify the advisory;

(c) Names for the disease or condition;

(d) A description of the disease or condition;

(e) Recommendations for health professionals, health facilities, and laboratories; and

(f) Notification requirements including:

1. The notification time interval;

2. Methods for notification; and

3. Forms to be completed and submitted with the notification.

(3) The duty to report by health professionals, health facilities, and laboratories pursuant to a Kentucky Public Health Advisory shall begin upon receipt of the advisory and shall remain in effect until the advisory is rescinded by order of the secretary or the commissioner.

Section 19. Incorporation by Reference. (1) The following material is incorporated by reference:

(a) Form "EPID 200, Kentucky Reportable Disease Form", 9/2014;

(b) Form "EPID 250, Kentucky Reportable MDRO Form", 6/2014;

(c) Form "EPID 394, Kentucky Reportable Disease Form, Hepatitis Infection in Pregnant Women or Child (under the age of five)", 11/2013;

(d) Form "EPID 399, Perinatal Hepatitis B Prevention Form for Infants", 4/2012;

(e) Form "Adult HIV Confidential Case Report Form", 3/2013; and

(f) Form "Pediatric HIV Confidential Case Report Form", 3/2013.

(2) This material may be inspected, copied, or obtained, subject to applicable copyright law, at the Department for Public Health, 275 East Main Street, Frankfort, Kentucky 40621, Monday through Friday, 8 a.m. to 4:30 p.m.[~~Notification Standards. (1) A health professional licensed under KRS Chapters 311 through 314, and a health facility licensed under KRS Chapter 216B, shall give notification pursuant to subsection (3) of this section, if:~~

~~(a) The health professional makes a probable diagnosis of a disease specified in Section 2, 3, or 4 of this administrative regulation; and~~

~~(b) The diagnosis is supported by:~~

~~1. "Case Definitions for Infectious Conditions under Public Health Surveillance"; or~~

~~2. A reasonable belief that the disease is present.~~

~~(2)(a) A single report by a hospital of a condition diagnosed by a test result from the hospital laboratory shall constitute notification on behalf of the hospital and its laboratory.~~

~~(b) A hospital may designate an individual to report on behalf of the hospital's laboratory and the hospital's clinical facilities.~~

~~(3) The notification shall be given to the:~~

~~(a) Local health department serving the jurisdiction in which the patient resides; or~~

~~(b) Department for Public Health.~~

~~(4) The reporting professional shall furnish the:~~

~~(a) Name, birthdate, address, county of residence, and telephone number of the patient; and~~

~~(b) Clinical, epidemiologic, and laboratory information pertinent to the disease.~~

~~(5) Upon the confirmation of a laboratory test result which indicates infection with an agent associated with one (1) or more of the diseases or conditions specified in Section 2, 3, or 4 of this administrative regulation, the director of a clinical laboratory licensed under KRS Chapter 333 shall:~~

~~(a) Report the result to the:~~

~~1. Local health department serving the jurisdiction in which the patient resides; or~~

~~2. Department for Public Health; and~~

~~(b) Report the patient's name, birthdate, address, and county of residence; and~~

~~Section 2. Diseases Requiring Urgent Notification. (1) Notification pursuant to Section 1(3) of this administrative regulation of the following diseases shall be made within twenty-four (24) hours:~~

~~(a) Anthrax;~~

~~(b) Botulism;~~

~~(c) Brucellosis;~~

~~(d) Campylobacteriosis;~~

~~(e) Cryptosporidiosis;~~

~~(f) Cholera;~~

~~(g) Diphtheria;~~

~~(h) Escherichia coli O157:H7;~~

~~(i) Escherichia coli, shiga toxin positive;~~

~~(j) Encephalitis, California group;~~

~~(k) Encephalitis, Eastern equine;~~

~~(l) Encephalitis, St. Louis;~~

~~(m) Encephalitis, Venezuelan equine;~~

~~(n) Encephalitis, Western;~~

~~(o) Encephalitis, West Nile Virus;~~

~~(p) Hansen's Disease;~~

~~(q) Hantavirus infection;~~

~~(r) Hemophilus influenzae invasive disease;~~

~~(s) Hepatitis A;~~

~~(t) Listeriosis;~~

~~(u) Measles;~~

~~(v) Meningococcal infections;~~

~~(w) Pertussis;~~

~~(x) Plague;~~

~~(y) Poliomyelitis;~~

~~(z) Psittacosis;~~

~~(aa) Q fever;~~

~~(bb) Rabies, animal;~~

~~(cc) Rabies, human;~~

~~(dd) Rubella;~~

~~(ee) Rubella syndrome, congenital;~~

~~(ff) Salmonellosis;~~

~~(gg) Shigellosis;~~

~~(hh) Syphilis, primary, secondary, early latent or congenital;~~

~~(ii) Tetanus;~~

~~(jj) Tularemia;~~

~~(kk) Typhoid fever;~~

~~(ll) Vibrio parahaemolyticus;~~

~~(mm) Vibrio vulnificus;~~

~~(nn) Yellow fever.~~

~~(2) Weekend or evening urgent notification.~~

~~(a) If health department personnel cannot be contacted directly, notification shall be made by electronic submission or by telephone to an emergency number provided by the local health department or the Department for Public Health.~~

~~(b) For the protection of patient confidentiality, this notification shall include:~~

~~1. The name of the condition being reported; and~~

~~2. A telephone number that can be used by the department to contact the reporting professional.~~

~~(3) Upon receipt of a report for a disease specified in subsection (1) of this section, the local health department shall:~~

~~(a) Immediately notify the Department for Public Health; and~~

~~(b) Assist the department in carrying out a public health~~

~~response as instructed.~~

~~Section 3. Diseases Requiring Priority Notification. (1) Notification pursuant to Section 1(3) of this administrative regulation of the following diseases shall be made within one (1) business day:~~

~~(a) Group A streptococcal infection, invasive;~~

~~(b) Hepatitis B, acute;~~

~~(c) Hepatitis B infection in a pregnant woman or a child born in or after 1992;~~

~~(d) Mumps;~~

~~(e) Toxic shock syndrome;~~

~~(f) Tuberculosis.~~

~~(2) Upon receipt of a report for a disease or condition specified in subsection (1) of this section, a local health department:~~

~~(a) Shall investigate the report and carry out public health measures appropriate to the disease or condition;~~

~~(b) Shall notify the Department for Public Health of the case, in writing, within five (5) business days; and~~

~~(c) May seek assistance from the Department for Public Health.~~

~~Section 4. Diseases Requiring Routine Notification. (1) Notification pursuant to Section 1(3) of this administrative regulation of the following diseases shall be made within five (5) business days:~~

~~(a) Chancroid;~~

~~(b) Chlamydia trachomatis infection;~~

~~(c) Ehrlichiosis;~~

~~(d) Gonorrhea;~~

~~(e) Granuloma inguinale;~~

~~(f) Hepatitis C, acute;~~

~~(g) Histoplasmosis;~~

~~(h) Lead poisoning;~~

~~(i) Legionellosis;~~

~~(j) Lyme Disease;~~

~~(k) Lymphogranuloma venereum;~~

~~(l) Malaria;~~

~~(m) Rabies postexposure prophylaxis;~~

~~(n) Rocky Mountain Spotted Fever;~~

~~(o) Streptococcus pneumoniae, drug-resistant invasive disease;~~

~~(p) Syphilis, other than primary, secondary, early latent or congenital; and~~

~~(q) Toxoplasmosis.~~

~~(2) Upon receipt of a report for a disease or condition specified in subsection (1) of this section, a local health department shall:~~

~~(a) Make a record of the report;~~

~~(b) Answer inquiries or render assistance regarding the report if requested by the reporting entity; and~~

~~(c) Forward the report to the Department for Public Health within three (3) business days.~~

~~Section 5. Outbreaks or Unusual Public Health Occurrences. (1) If, in the judgment of a health professional licensed under KRS Chapters 311 through 314, or a health facility licensed under KRS Chapter 216B, an unexpected pattern of cases, suspected cases, or deaths which may indicate a newly-recognized infectious agent, an outbreak, epidemic, related public health hazard or an act of bioterrorism, such as smallpox, appears, a report shall be made immediately by telephone to the:~~

~~(a) Local health department where the professional is practicing or where the facility is located; or~~

~~(b) Department for Public Health.~~

~~(2) An instance of suspected staphylococcal or other foodborne intoxication or an instance of salmonellosis or other foodborne or waterborne infection shall be reported within one (1) business day, and shall include all known information about the persons affected.~~

~~(3) The local health department:~~

~~(a) Shall investigate the outbreak or occurrence;~~

~~(b) Shall carry out public health measures appropriate to the disease or condition involved;~~

~~(c) Shall make medical and environmental recommendations appropriate to prevent future similar outbreaks or occurrences; and~~

~~(d) May seek assistance from the Department for Public Health.~~

~~Section 6. Laboratory Surveillance. (1)(a) In addition to the reports required by Sections 1 through 4 of this administrative regulation, laboratory results shall be reported weekly for influenza virus isolates.~~

~~(b) The report shall include the:~~

~~1. Name, birthdate, address, and county of residence of the person with the disease; and~~

~~2. Specific laboratory information pertinent to the result.~~

~~(c) The format of the report shall be an alphabetical listing of each person for whom a report is submitted.~~

~~(2) Upon request by the Department for Public Health, a clinical laboratory within a hospital licensed under KRS Chapter 216B, or a laboratory licensed under KRS Chapter 333, shall report:~~

~~(a) The numbers of isolates and information regarding the antimicrobial resistance patterns of the isolates;~~

~~(b) At intervals agreed upon between the laboratory and the department, not less frequently than three (3) months, for the following:~~

~~1. Staphylococcus aureus;~~

~~2. Enterococcus species; or~~

~~3. Other organism specified in a request that includes a justification of the public health importance of the organism.~~

~~Section 7. Human Immunodeficiency Virus (HIV) and Acquired Immunodeficiency Syndrome (AIDS) Surveillance. (1) Physicians and Medical Laboratories shall report:~~

~~(a)1. A positive test result for HIV infection including a result from:~~

~~a. Elisa;~~

~~b. Western Blot;~~

~~c. PCR;~~

~~d. HIV antigen; or~~

~~e. HIV culture;~~

~~2. CD4+ assay including absolute CD4+ cell counts and CD4+%;~~

~~3. HIV detectable Viral Load Assay; and~~

~~4. A positive serologic test result for HIV infection; or~~

~~(b) A diagnosis of AIDS that meets the definition of AIDS established within the Centers for Disease Control and Prevention (CDC) guidelines and reported in the:~~

~~1. "Adult HIV/AIDS Confidential Case Report Form," or~~

~~2. "Pediatric HIV/AIDS Confidential Case Report Form."~~

~~(2) An HIV infection or AIDS diagnosis shall be reported within five (5) business days and, if possible, on the "Adult HIV/AIDS Confidential Case Report form" or the "Pediatric HIV/AIDS Confidential Case Report form."~~

~~(a) A report for a resident of Jefferson, Henry, Oldham, Bullitt, Shelby, Spencer, and Trimble Counties shall be submitted to the HIV/AIDS Surveillance Program of the Louisville-Metro Health Department.~~

~~(b) A report for a resident of the remaining Kentucky counties shall be submitted to the HIV/AIDS Surveillance Program of the Kentucky Department for Public Health, or as directed by the HIV/AIDS project coordinator.~~

~~(3) A report for a person with HIV infection without a diagnosis of AIDS shall include the following information:~~

~~(a) The patient's full name;~~

~~(b) Date of birth, using the format MMDDYY;~~

~~(c) Gender;~~

~~(d) Race;~~

~~(e) Risk factor, as identified by CDC;~~

~~(f) County of residence;~~

~~(g) Name of facility submitting report;~~

~~(h) Date and type of HIV test performed;~~

~~(i) Results of CD4+ cell counts and CD4+%;~~

~~(j) Results of viral load testing;~~

~~(k) PCR, HIV culture, HIV antigen, if performed;~~

~~(l) Results of TB testing, if available; and~~

~~(m) HIV status of the person's partner, spouse or children.~~

~~(4) Reports of AIDS cases shall include the information in subsections (1) through (3) of this section; and~~

~~(a) The patient's complete address;~~

~~(b) Opportunistic infections diagnosed; and~~

~~(c) Date of onset of illness.~~

~~(5) (a) Reports of AIDS shall be made whether or not the patient has been previously reported as having HIV infection.~~

~~(b) If the patient has not been previously reported as having HIV infection, the AIDS report shall also serve as the report of HIV infection.~~

~~Section 8. Reporting of Communicable Diseases in Animals. (1) Upon arriving at a probable diagnosis in an animal of a condition known to be communicable to humans, a veterinarian licensed under the provisions of KRS Chapter 321 shall report the occurrence within one (1) business day to:~~

~~(a) The local health department in which the animal is located; or~~

~~(b) If the local health department cannot be reached, the Department for Public Health.~~

~~(2) Upon the confirmation of a laboratory test result which indicates infection of an animal with an agent associated with a condition known to be communicable to humans, the director of a clinical laboratory licensed under KRS Chapter 333 shall, within one (1) business day, report the result to the:~~

~~(a) Local health department serving the jurisdiction in which the animal is located; or~~

~~(b) Department for Public Health.~~

~~(3) The local health department:~~

~~(a) Shall investigate the report and carry out public measures for the control of communicable diseases appropriate to the condition;~~

~~(b) Shall notify the Department for Public Health of the occurrence, in writing, within five (5) business days; and~~

~~(c) May seek assistance from the Department for Public Health.~~

~~Section 9. Asbestosis, Coal Worker's Pneumoconiosis, and Silicosis. (1) A reporting provider shall submit the following information relating to a person diagnosed with asbestosis, coal worker's pneumoconiosis, or silicosis:~~

~~(a) Name;~~

~~(b) Address;~~

~~(c) Birthdate; and~~

~~(d) County of residence.~~

~~(2) A reporting provider shall submit the required information to the department within three (3) months following the diagnosis.~~

~~Section 10. Incorporation by Reference. (1) The following material is incorporated by reference:~~

~~(a) "Case Definitions for Infectious Conditions under Public Health Surveillance, MMWR, May 2, 1997, Volume 46, Number RR-10", published by the Epidemiology Program Office, Centers for Disease Control and Prevention, Public Health Service, U.S. Department of Health and Human Services, Atlanta, Georgia;~~

~~(b) "Adult HIV/AIDS Confidential Case Report (CDC 50.42A, Revised January, 2003)"; and~~

~~(c) "Pediatric HIV/AIDS Confidential Case Report form (CDC 50.42B, Revised January, 2003)"; and~~

~~(d) "Control of Communicable Diseases Manual 17th Edition, An Official Report of the American Public Health Association, American Public Health Association, Washington, D.C., 2000".~~

~~(2) This material may be inspected, copied, or obtained, subject to applicable copyright law, at the Department for Public Health, 275 East Main Street, Frankfort, Kentucky 40621, Monday through Friday, 8 a.m. to 4:30 p.m.~~]

STEPHANIE MAYFIELD GIBSON, MD, FCAP, Commissioner
AUDREY TAYSE HAYNES, Secretary

APPROVED BY AGENCY: December 12, 2014

FILED WITH LRC: December 15, 2014 at 9 a.m.

CONTACT PERSON: Tricia Orme, Office of Legal Services, 275 East Main Street 5 W-B, Frankfort, Kentucky 40601, Phone: 502-564-7905, Fax: 502-564-7573, Tricia.Orme@ky.gov.

REGULATORY IMPACT ANALYSIS AND TIERING STATEMENT

Contact Person: Sandy Kelly

(1) Provide a brief summary of:

(a) What this administrative regulation does: This administrative regulation establishes notification standards and specifies the diseases requiring immediate, urgent, priority, routine, or general notification, in order to facilitate rapid public health action to control diseases, and to permit an accurate assessment of the health status of the Commonwealth.

(b) The necessity of this administrative regulation: KRS 211.180 requires the cabinet to implement a statewide program for the detection, prevention and control of diseases. This regulation outlines the process and methods of reporting and surveillance of diseases of concern for the public's health.

(c) How this administrative regulation conforms to the content of the authorizing statutes: KRS 211.180 requires the cabinet to collect disease data and KRS 214.010 requires every physician, Advanced Practice Registered Nurse or household to notify the local health department of the existence of diseases and conditions of public health importance. This regulation outlines the appropriate way to report and collect this information including what should be reported.

(d) How this administrative regulation currently assists or will assist in the effective administration of the statutes: This administrative regulation will assist in the effective administration of the statutes that require the cabinet to collect disease data and protect the health of the public. The process for what things to report when, how and where are outlined to give clear guidance to those entities required to report.

(2) If this is an amendment to an existing administrative regulation, provide a brief summary of:

(a) How the amendment will change this existing administrative regulation: This administrative regulation was amended in response to comments received primarily to clarify the requirements. References to other sections within the regulation were made, a few definitions were amended to delete repetitive language, and amendments were made to comply with KRS 13A.

(b) The necessity of the amendment to this administrative regulation: This administrative regulation was amended in response to comments received to make it easier to understand and find requirements. Amendments were also required to comply with KRS 13A.

(c) How the amendment conforms to the content of the authorizing statutes: These amendments clarify what is required by the authorizing statutes.

(d) How the amendment will assist in the effective administration of the statutes: This amendment assists in effective administration of the statutes as it clarifies definitions and requirements and makes the administrative regulation easier to read and comply with.

(3) List the type and number of individuals, businesses, organizations, or state and local governments affected by this administrative regulation: Kentucky hospitals and healthcare facilities, Kentucky physicians, state and national laboratories, local health departments, the Kentucky Department for Public Health and any Kentucky citizen exposed to or potentially exposed to a reportable disease will be affected by this regulation.

(4) Provide an analysis of how the entities identified in question (3) will be impacted by either the implementation of this administrative regulation, if new, or by the change, if it is an amendment, including

(a) List the actions that each of the regulated entities identified in question (3) will have to take to comply with this administrative regulation or amendment: The amendments made to this administrative regulation in response to comments: No additional actions are required as a result of the amendments made to this administrative regulation in response to comments.

(b) In complying with this administrative regulation or

amendment, how much will it cost each of the entities identified in question (3): No additional costs are required as a result of the amendments made to this administrative regulation in response to comments.

(c) As a result of compliance, what benefits will accrue to the entities identified in question (3): No additional actions are required as a result of the amendments made to this administrative regulation in response to comments. The amendments only make this administrative regulation easier to read and comply with.

(5) Provide an estimate of how much it will cost the administrative body to implement this administrative regulation:

(a) Initially: There will be no fiscal impact to the administrative body from implementation of this amendment.

(b) On a continuing basis: There will be no fiscal impact to the administrative body from implementation of this amendment.

(6) What is the source of the funding to be used for the implementation and enforcement of this administrative regulation: The department currently operates the disease surveillance program using state general funds. No additional funding will be necessary to implement this amended regulation.

(7) Provide an assessment of whether an increase in fees or funding will be necessary to implement this administrative regulation, if new, or by the change if it is an amendment: There will be no new fees nor increase to existing fees due to this amendment.

(8) State whether or not this administrative regulation established any fees or directly or indirectly increased any fees: No fees are established either directly or indirectly by this amendment.

(9) TIERING: Is tiering applied? Tiering was not appropriate in this administrative regulation because the regulation applies equally to all those individuals or entities regulated by it.

FISCAL NOTE ON STATE OR LOCAL GOVERNMENT

1. What units, parts or divisions of state or local government (including cities, counties, fire departments, or school districts) will be impacted by this administrative regulation? Local health departments and the Kentucky Department for Public Health will be impacted by this administrative regulation.

2. Identify each state or federal statute or federal regulation that requires or authorizes the action taken by the administrative regulation. KRS 211.180, 214.010, 214.645, and 333.130

3. Estimate the effect of this administrative regulation on the expenditures and revenues of a state or local government agency (including cities, counties, fire departments, or school districts) for the first full year the administrative regulation is to be in effect.

(a) How much revenue will this administrative regulation generate for the state or local government (including cities, counties, fire departments, or school districts) for the first year? No revenue will be generated by this amendment in the first year.

(b) How much revenue will this administrative regulation generate for the state or local government (including cities, counties, fire departments, or school districts) for subsequent years? No revenue will be generated by this amendment for subsequent years.

(c) How much will it cost to administer this program for the first year? Reporting and data surveillance is occurring. Therefore, there will be no additional costs in the first year to administer this program due to this amendment.

(d) How much will it cost to administer this program for subsequent years? The amendment to this regulation will create no additional costs in subsequent years.

Note: If specific dollar estimates cannot be determined, provide a brief narrative to explain the fiscal impact of the administrative regulation.

Revenues (+/-):

Expenditures (+/-):

Other Explanation:

CABINET FOR HEALTH AND FAMILY SERVICES
Department for Public Health
Division of Public Health Protection and Safety
(Amended After Comments)

902 KAR 100:012. Fee schedule.

RELATES TO: KRS 211.840-211.852, 211.990(4)

STATUTORY AUTHORITY: KRS 194A.050(1), 211.844**, 211.848(1)**[~~, EO 2004-726~~]

NECESSITY, FUNCTION, AND CONFORMITY:[~~EO 2004-726, effective July 9, 2004, reorganized the Cabinet for Health and Family Services and placed the Department for Public Health under the Cabinet for Health and Family Services.~~] KRS 211.848(1) requires the cabinet to establish a reasonable schedule of fees and charges by administrative regulation. This administrative regulation establishes a schedule of fees and charges for radioactive material licensees;[~~licenses and~~] radiation producing machines registrants; others who may receive, possess, use, transfer, or dispose of sources of radiation; and vendors, service providers, and qualified experts providing services in Kentucky[~~and couriers or organizations responsible for the shipment of radioactive material, spent nuclear fuel, transuranic waste, or other radioactive material requiring escort through Kentucky~~].

Section 1. Radiation Producing Machine Schedule of Annual Fees and Charges. The following schedule, established in subsections (1) through (4) of this section, of annual fees shall apply to radiation producing machine registrants. An application for registration or annual renewal shall be accompanied by the appropriate fee established below:

(1) A diagnostic x-ray tube; therapeutic x-ray tube capable of operating up to 150 kVp - $125;[~~or industrial x-ray tube – fifty (50) dollars.~~]

(2) A therapeutic x-ray tube capable of operating at 150 kVp or above including particle accelerators – $500;[~~fifty (50) dollars.~~]

(3) Industrial, dental, and other x-ray tubes not specified above – eighty-five (85)[~~fifty (50)~~] dollars; and[~~.~~]

(4) Shielding evaluation, per room:[~~.~~]

(a) Diagnostic facilities - $600; and[~~$200.~~]

(b) Linear accelerator - $1,500[~~$1,000~~].

Section 2. Radioactive Material License Schedule of Annual Fees and Charges. The following schedule, established in subsections (1) through **(5)[(4)]** of this section, shall apply to radioactive material licenses. An initial and renewal application shall be accompanied by the fee established in this section.

(1) A specific radioactive material license initial and annual fee.

(a) Human use.

1. Nuclear medicine, Imaging - $2,100;[~~$790.~~]

2. Nuclear medicine, Radiopharmaceutical therapy - $2,100;

3. Nuclear medicine, Permanent implant - $2,700;

4. Nuclear medicine, Temporary implant - $1,500;

5. Nuclear medicine, Mobile imaging - $2,500;

6. Teletherapy or Gamma Stereotactic Radiosurgery - $4,000;[~~$790.~~]

7. Broad Scope, Medical - $7,500; and

8.[~~3. Mobile scanning - $450.~~

~~4.~~] Other - $1,250;[~~$375.~~]

(b) Industrial radiography - $4,000;[~~$790.~~]

(c) Wireline service - $2,500;[~~$790.~~]

(d) Broad scope, Academic - $3,500;[~~$1,050.~~]

(e) Nuclear laundry - $7,500;[~~$1,580.~~]

(f) Irradiator.

1. Self-contained - $1,750; and[~~$390.~~]

2. Unshielded during irradiation - $4,200;[~~$1,580.~~]

(g) Manufacturing,[~~/~~] processing, or[~~/~~] distribution.

1. Industrial gauging devices - $4,500;[~~$1,310.~~]

2. In vitro-[~~/~~]In vivo kits - $3,600;[~~$1,050.~~]

3. Radiopharmaceuticals - $5,200; and[~~$1,580.~~]

4. Other - $3,600;[~~$900.~~]

(h) Industrial gauging devices:

1. Fixed - $1,100; and

2. Portable - $1,300;[~~- $390.~~]

(i) In vitro, academic, environmental, or[~~and~~] clinical laboratory - $1,250;[~~$225.~~]

(j) Veterinary use - $2,100;[~~$375.~~]

(k) Services, such as leak testing - $1,200;[~~$260.~~]

(l) An application for review of a:

1. New sealed source or device; or

2. Custom device - $4,600[~~$1,050~~] plus the applicable fee in paragraphs (a) through (k)[~~(l)~~] of this subsection;[~~.~~]

(n) An amendment for review of a sealed source or device - $1,500;[~~$500.~~]

(o) A byproduct, source, or special nuclear material license **or other license[~~and other approval~~]** authorizing decommissioning, decontamination, reclamation, or site restoration - $7,500;[~~$1,500.~~]

(p) A license specifically authorizing the receipt of prepackaged byproduct, source material, or special nuclear material from other persons. The license authorizes the disposal of the material by transfer to a person authorized to receive or dispose of the material - $10,000; and[~~$3,700.~~]

(q) A license specifically authorizing the receipt of waste byproduct material, source material, or special nuclear material from a person for the purpose of storage, treatment, and packaging for transfer to a person authorized to receive or dispose of radioactive material - $25,000;[~~$10,000.~~]

(2) A general radioactive material license initial and annual fee.

(a) In vitro or medical use specified in 902 KAR 100:050, Sections 4 and 5 – $1,250; and[~~Seventy-five (75) dollars.~~]

(b) Measuring, gauging, or a controlling device except emergency exit signs – $300 per device not to exceed $1,200 per use location;[~~Seventy-five (75) dollars.~~]

(3) An application to amend an existing specific license – $200;**[~~and~~]**[~~Seventy-five (75) dollars.~~]

(4) An application for initial reciprocal recognition of an out-of-state license as established by 902 KAR 100:065 – Equal to the applicable fee for an in-state licensee**; and**

(5) A licensee required to pay an annual fee pursuant to this administrative regulation may qualify as a small entity pursuant to Form RPS-526, Certification of Small Entity Status. If a licensee qualifies as a small entity and completes and submits Form RPS-526, the licensee shall pay the reduced annual fee[~~licensee~~][~~$300~~].

Section 3. Inspection Fee. (1) The cost of a routine interval inspection shall be covered in the annual licensing renewal fee.

(2) One (1) or more additional inspections shall be conducted to ensure ongoing public health and safety if any of the following conditions established in paragraphs (a) through (d) exist:

(a) Willful neglect or careless disregard that has, or could lead to, a threat to public health and safety;

(b) Failure to take appropriate and timely action to correct documented violations of statutes, regulations, or conditions of the license or permit;

(c) A substantiated violation that indicates a lack of management oversight or that the radiation safety officer is not adequately performing duties; or

(d) Repeated violations from the previous inspection.

(3) The fee for each additional inspection shall be $500.

Section 4. Shipment of Radioactive Material and Waste. The shipper or carrier shall provide full cost reimbursement within thirty (30) days of receipt of the invoice, for all escorts of shipments[~~escort prior to the shipment~~] of radioactive material, spent nuclear fuel, transuranic waste, radioactive waste, and other radioactive material or waste through Kentucky.

Section 5. Site Investigations, Remediation Projects, and Scoping Surveys. The licensee, remediation contractor, or other responsible party shall provide full cost reimbursement for review and oversight of site investigations, remediation projects, and scoping surveys to include project evaluation and planning, sample collection, analysis, and independent validation as applicable.

Section 6. Qualified Experts, Vendors and Service Providers. The following schedule, established in subsections (1) and (2) of this section, shall apply to any entity or individual seeking or maintaining a designation as a qualified expert, vendor, or service provider as defined in 902 KAR 100:010:

(1) Qualified Experts:

(a) Initial application - $100; and

(b) Annual fee - fifty (50) dollars; and

(2) Vendors and service providers - $300.

Section 7.[~~4.~~] General Requirements. (1) A general radioactive material license shall expire on July 31 following the date of issuance.

(2) A radiation producing machine registration certificate shall expire on the last day of the month, one (1) year after the date of issuance.

(3) A general radioactive material license fee shall be paid on or before July 31.

(4) A specific radioactive material license shall be renewed annually based on the expiration date stated in the license.

(5) A renewal[~~radiation producing machine registration~~] fee shall be paid within forty-five (45) days of the bill date. A payment postmarked more than forty-five (45) days of the bill date shall be subject to a $100 late payment penalty per license, device, or x-ray tube in addition to the renewal[~~registration~~] fee.

(6) Payment of a fee or other charge shall be submitted to the Radiation Health[~~and Toxic Agents~~] Branch, Cabinet for Health and Family Services, 275 East Main Street, Mailstop HS1C A[~~HS2E-D~~], Frankfort, Kentucky 40621-0001, in the form of a check or money order payable to the Kentucky State Treasurer **or paid online at https://prd.chfs.ky.gov/rad_epay/**.

(7) If a check issued for payment of the fee established in this administrative regulation is returned to the state treasurer due to insufficient funds, the payor shall resubmit payment by money order or cashier's check.

(8) A registration and licensing application fee shall be nonrefundable.

(9) Failure to submit an applicable fee established in this administrative regulation shall be deemed a violation and subject to the provisions of 902 KAR 100:170.

Section 8. Incorporation by Reference. (1) "RPS-526, Certification of Small Entity Status," edition 12/2014, is incorporated by reference.

(2) This material may be inspected, copied, or obtained, subject to applicable copyright law, at the Cabinet for Health and Family Services, Department for Public Health, Division of Public Health Protection and Safety, Radiation Health Branch, 275 East Main Street, Frankfort, Kentucky 40621, Monday through Friday, 8:00 a.m. to 4:30 p.m.

STEPHANIE MAYFIELD GIBSON, MD FCAP, Commissioner
AUDREY TAYSE HAYNES, Secretary

APPROVED BY AGENCY: December 10, 2014

FILED WITH LRC: December 11, 2014 at 3 p.m.

CONTACT PERSON: Tricia Orme, Office of Legal Services, 275 East Main Street 5W-B, Frankfort, Kentucky 40601, phone 502/564-7905, fax 502/564-7573, tricia.orme@ky.gov.

REGULATORY IMPACT ANALYSIS AND TIERING STATEMENT

Contact person: Matt McKinley

(1) Provide a brief summary of:

(a) What this administrative regulation does: This regulation establishes a fee
schedule for use by licensees, registrants, or others who may receive, possess, use, transfer, or dispose of sources of radiation, and vendors, service providers, and qualified experts providing services in Kentucky.

(b) The necessity of this administrative regulation: To establish a reasonable schedule of fees to be paid by the regulated community to offset the costs of providing statutory and regulatory oversight in accordance with the requirements of KRS 211.848(1).

(c) How this administrative regulation conforms to the content of the authorizing statutes: The statutory authority for the promulgation of an administrative regulation relating to the establishment of a fee schedule for licensees and registrants is KRS 211.848(1). The administrative regulation also establishes fees and charges for others, who may receive, possess, use, transfer, or dispose of sources of radiation, and vendors, service providers, and qualified experts providing services in Kentucky.

(d) How this administrative regulation currently assists or will assist in the effective administration of the statutes: This proposed amended regulation will help to provide the necessary funds to cover the administrative costs of carrying out the statutory and regulatory requirements associated with the Kentucky Radiation Control Act of 1978.

(2) If this is an amendment to an existing administrative regulation, provide a brief summary of:

(a) How the amendment will change this existing administrative regulation: An amendment has been made to this administrative regulation to include reduced fees for small entities, in response to comments received during the public comment period. Small entities include small businesses, small manufacturing industries, small organizations, small governmental jurisdictions, and small educational institutions not state or publicly supported. Although fees have not been increased since 2004 and these fees are less than those of surrounding states and those administered by the U.S. Nuclear Regulatory Commission, the Cabinet does not wish to cause undue burden to small businesses in the Commonwealth. Also, an amendment has been made to clarify that the Cabinet does accept electronic payments, also in response to comment received during the public comment period.

(b) The necessity of the amendment to this administrative regulation: The Cabinet does not wish to cause undue burden to small entities in the Commonwealth or cause a small entity to go out of business, therefore the administrative regulation has been amended to include reduced fees for small entities. An amendment regarding the acceptance of electronic payments was also necessary to remove ambiguity.

(c) How the amendment conforms to the content of the authorizing statutes: KRS 211.848(1) states that the Secretary for the Cabinet for Health and Family Services shall fix a reasonable schedule of fees and charges, by regulation, to be paid by applicants for registration of radiation producing machines and radioactive material licenses and for the renewal of the certificates and licenses. The secretary shall also prescribe, by regulation, a reasonable schedule of fees to be paid by registrants and licensees for inspections and environmental surveillance activities conducted by the cabinet. The reduced fees for small entities are more reasonable.

(d) How the amendment will assist in the effective administration of the statutes: The amendment helps assure that the schedule of fees and charges authorized by KRS 211.848(1) remain reasonable.

(3) List the type and number of individuals, businesses, organizations, or state and local governments affected by this administrative regulation: This administrative regulation adjusts or establishes fees and charges for approximately 430 radioactive material licensees, 4,144 radiation producing machine registrants, and 490 vendors, service providers, and qualified experts.

(4) Provide an analysis of how the entities identified in question (3) will be impacted by either the implementation of this administrative regulation, if new, or by the change, if it is an amendment, including:

(a) Small business entities affected by this amendment will have to complete and submit Form RPS-526, Certification of Small Entity Status, to the Cabinet along with their reduced fee payment. The completion and submittal of one form is the only new requirement in order to reduce the required payment.

(b) In complying with this administrative regulation or amendment, how much will it cost each of the entities in question (3): There is no increased cost; in fact the amendment allows a small business entity to save money.

(c) As a result of compliance, what benefits will accrue to the entities identified in question (3): They will have reduced fees and may save hundreds or thousands of dollars.

(5) Provide an estimate of how much it will cost to implement this administrative regulation:

(a) Initially: There will be no additional cost to administer this program initially.

(b) On a continuing basis: No additional costs are anticipated on a continuing basis.

(6) What is the source of the funding to be used for the implementation and enforcement of this administrative regulation: Agency fees and general funds support the operation of this program. It is anticipated that the proposed fee increases will generate between $600,000 and $750,000, depending on usage and number of entities seeking licensing. This fee increase amendment will help to reduce the department's dependence on general funds, which has been necessary to supplement agency funds that have been insufficient to cover the cost of operating this program. In FY14, the cost to administer the program was $2.4 million; fees raised revenues of approximately $1.4 million, requiring the use of about $1 million in general funds. This fee increase, while not making the program self-sustaining, will help to lessen the reliance on general fund dollars.

(7) Provide an assessment of whether an increase in fees or funding will be necessary to implement this administrative regulation, if new, or by the change if it is an amendment: This administrative regulation amendment has been proposed in order to raise existing fees to better support the operational costs of the program and offset the current dependence on general funds. In FY14, the cost to administer the program $2.4 million; fees raised revenues of approximately $1.4 million, requiring the use of about $1 million in general funds. This fee increase, while not making the program self-sustaining, will help to lessen the reliance on general fund dollars. A further amendment has been made to reduce the fees for small business entities from what was originally proposed.

(8) State whether or not this administrative regulation establishes any fees or directly or indirectly increases any fees: This amendment increases existing licensing, registration, and annual fees charged to entities using and holding radioactive materials. It also creates/establishes additional categories of fees and better defines or categorizes the users of radioactive materials and machines. It puts in place an administrative fee for tracking vendors, service providers, and experts in this field. A further amendment has been made to reduce the fees for small business entities from what was originally proposed.

(9) TIERING: Is tiering applied? Yes. This administrative regulation was amended to include tiering so that small business entities would have reduced fees. The Cabinet doesn't wish to cause undue burden to small entities or cause them to go out of business. This amendment was made in response to comments received during the public comment period.

FISCAL NOTE ON STATE OR LOCAL GOVERNMENT

1. What units, parts, or divisions of state or local government (including cities, counties, fire departments, or school districts) will be impacted by this administrative regulation? This amendment will impact the Energy and Environment Cabinet, Transportation Cabinet, Cabinet for Health and Family Services, state and local bomb squads, Louisville Metro Police Department, Lexington Police Department, local health departments, the Justice Cabinet, state colleges and universities, and local judicial centers.

2. Identify each state or federal statute or federal regulation that requires or authorizes the action taken by this administrative regulation. KRS 211.848(1).

3. Estimate the effect of this administrative regulation on the expenditures and revenues of a state or local government agency (including cities, counties, fire departments, or school districts) for the first full year the administrative regulation is to be in effect.

(a) How much revenue will this administrative regulation generate for the state or local government (including cities, counties, fire departments, or school districts) for the first year? The Department for Public Health will realize a revenue increase of approximately $600,000 to $750,000 in the first full year. Currently, fees are not sufficient to cover the cost to operate this program. In

FY14, the cost to administer the program was $2.4 million; fees raised revenues of approximately $1.4 million, requiring the use of about $1 million in general funds. This fee increase, while not making the program self-sustaining, will help to lessen the reliance on general fund dollars.

(b) How much revenue will this administrative regulation generate for the state or local government (including cities, counties, fire departments, or school districts) for subsequent years? In subsequent years, the Department for Public Health will realize a revenue increase of approximately $600,000 to $750,000. In FY14, the cost to administer the program was $2.4 million; fees raised revenues of approximately $1.4 million, requiring the use of about $1 million in general funds. This fee increase, while not making the program self-sustaining, will help to lessen the reliance on general fund dollars.

(c) How much will it cost to administer this program for the first year? There will be no additional cost to administer this program in the first year as it is currently in existence. In FY14, the cost to administer the program was $2.4 million while fees raised revenues of approximately $1.4 million, requiring the use of about $1 million in general funds. This fee increase, while not making the program self-sustaining, will help to lessen the reliance on general fund dollars.

(d) How much will it cost to administer this program for subsequent years? There will be no additional cost to administer this program in subsequent years as it is currently in existence. In FY14, the cost to administer the program was $2.4 million while fees raised revenues of approximately $1.4 million, requiring the use of about $1 million in general funds. This fee increase, while not making the program self-sustaining, will help to lessen the reliance on general fund dollars.

Note: If specific dollar estimates cannot be determined, provide a brief narrative to explain the fiscal impact of the administrative regulation.

Revenues (+/-):

Expenditures (+/-):

Other Explanation:

FEDERAL MANDATE ANALYSIS COMPARISON

1. Federal statute or regulation constituting the federal mandate. There is no federal statute or regulation constituting a federal mandate.

2. State compliance standards. This standard sets fees for licensees possessing radioactive materials and for registrants using radiation producing machines.

3. Minimum or uniform standards contained in the federal mandate. There are no minimum or uniform standards.

4. Will this administrative regulation impose stricter requirements, or additional or different responsibilities or requirements, than those required by the federal mandate? There is no federal mandate.

5. Justification for the imposition of the stricter standard, or additional or different responsibilities or requirements. There is no federal mandate.

CABINET FOR HEALTH AND FAMILY SERVICES
Department for Medicaid Services
Division of Policy and Operations
(Amended After Comments)

907 KAR 3:005. Coverage of physicians' services.

RELATES TO: KRS 205.520, 205.560, 42 C.F.R. 415.152, 415.174, 415.184, 440.50, 447.26, 45 C.F.R. 160, 164, 42 U.S.C. 1320 - 1320d-8, 1396a(a)(19), (30)

STATUTORY AUTHORITY: KRS 194A.030(2), 194A.050(1), 205.520(3), 205.560(1)

NECESSITY, FUNCTION, AND CONFORMITY: The Cabinet for Health and Family Services, Department for Medicaid Services, has responsibility to administer the Medicaid Program. KRS 205.520(3) authorizes the cabinet, by administrative regulation, to comply with any requirement that may be imposed or opportunity presented by federal law to qualify for federal Medicaid funds. This administrative regulation establishes the Medicaid Program coverage provisions and requirements relating to physicians' services.

Section 1. Definitions. (1) "Advanced practice registered nurse" or "APRN" is defined by KRS 314.011(7).

(2) "Behavioral health practitioner under supervision" means an individual who is:

(a) A licensed psychological associate;

(b) A licensed professional counselor associate;

(c) A certified social worker;

(d) A marriage and family therapy associate;

(e) A licensed professional art therapist associate;

(f) A licensed assistant behavior analyst;

(g) A physician assistant **working under the supervision of a physician**; or

(h) A certified alcohol and drug counselor.

(3) "Common practice" means an arrangement through which a physician assistant **or advanced practice registered nurse** administers health care services under the supervision of a physician via a supervisory relationship that has been approved by the Kentucky Board of Medical Licensure.

(4)[~~(3)~~] "CPT code" means a code used for reporting procedures and services performed by medical practitioners and published annually by the American Medical Association in Current Procedural Terminology.

(5)[~~(4)~~] "Department" means the Department for Medicaid Services or its designee.

(6)[~~(5)~~] "Designated controlled substance provider" means the provider designated as a lock-in recipient's controlled substance prescriber:

(a) Pursuant to 907 KAR 1:677, if the recipient is not an enrollee; or

(b) As established by the managed care organization in which the lock-in recipient is enrolled, if the lock-in recipient is an enrollee.

(7)[~~(6)~~] "Designated primary care provider" means the provider designated as a lock-in recipient's primary care provider:

(a) Pursuant to 907 KAR 1:677, if the recipient is not an enrollee; or

(b) As established by the managed care organization in which the lock-in recipient is enrolled, if the lock-in recipient is an enrollee.

(8)[~~(7)~~] "Direct physician contact" means that the billing physician is physically present with and evaluates, examines, treats, or diagnoses the recipient.

(9)[~~(8)~~] "Early and periodic screening and diagnosis and treatment" or "EPSDT" is defined by 42 C.F.R. 440.40(b).

(10)[~~(9)~~] "Emergency care" means:

(a) Covered inpatient or outpatient services furnished by a qualified provider that are needed to evaluate or stabilize an emergency medical condition that is found to exist using the prudent layperson standard; or

(b) Emergency ambulance transport.

(11)[~~(10)~~] "Enrollee" means a recipient who is enrolled with a managed care organization.

(12)[~~(11)~~] "Federal financial participation" is defined by 42 C.F.R. 400.203.

(13)[~~(12)~~] "Global period" means the period of time in which related preoperative, intraoperative, and postoperative services and follow-up care for a surgical procedure are customarily provided.

(14)[~~(13)~~] "Graduate medical education program" or "GME Program" means:

(a) A residency program approved by:

1. The Accreditation Council for Graduate Medical Education of the American Medical Association;

2. The Committee on Hospitals of the Bureau of Professional Education of the American Osteopathic Association;

3. The Commission on Dental Accreditation of the American Dental Association; or

4. The Council on Podiatric Medicine Education of the American Podiatric Medical Association; or

(b) An approved medical residency program as defined in 42 C.F.R. 413.75(b).

(15)[~~(14)~~] "Incidental" means that a medical procedure:

(a) Is performed at the same time as a primary procedure; and

(b)1. Requires little additional resources; or

2. Is clinically integral to the performance of the primary procedure.

(16)[~~(15)~~] "Integral" means that a medical procedure represents a component of a more complex procedure performed at the same time.

(17)[~~(16)~~] "Lock-in recipient" means:

(a) A recipient enrolled in the lock-in program in accordance with 907 KAR 1:677; or

(b) An enrollee enrolled in a managed care organization's lock-in program pursuant to 907 KAR 17:020, Section 8.

(18)[~~(17)~~] "Locum tenens APRN" means an APRN:

(a) Who temporarily assumes responsibility for the professional practice of a physician participating in the Kentucky Medicaid Program; and

(b) Whose services are billed under the APRN's provider number.

(19)[~~(18)~~] "Locum tenens physician" means a substitute physician:

(a) Who temporarily assumes responsibility for the professional practice of a physician participating in the Kentucky Medicaid Program; and

(b) Whose services are paid under the participating physician's provider number.

(20)[~~(19)~~] "Managed care organization" means an entity for which the Department for Medicaid Services has contracted to serve as a managed care organization as defined in 42 C.F.R. 438.2.

(21)[~~(20)~~] "Medicaid basis" means a scenario in which:

(a) A provider provides a service to a recipient as a Medicaid-participating provider in accordance with:

1. 907 KAR 1:671; and

2. 907 KAR 1:672;

(b) The Medicaid Program is the payer for the service; and

(c) The recipient is not liable for payment to the provider for the service other than any cost sharing obligation owed by the recipient to the provider.

(22)[~~(21)~~] "Medical necessity" or "medically necessary" means that a covered benefit is determined to be needed in accordance with 907 KAR 3:130.

(23)[~~(22)~~] "Medical resident" means:

(a) An individual who participates in an approved graduate medical education (GME) program in medicine or osteopathy; or

(b) A physician who is not in an approved GME program, but who is authorized to practice only in a hospital, including:

1. An individual with a:

a. Temporary license;

b. Resident training license; or

c. Restricted license; or

2. An unlicensed graduate of a foreign medical school.

(24)[~~(23)~~] "Mutually exclusive" means that two (2) procedures:

(a) Are not reasonably performed in conjunction with one another during the same patient encounter on the same date of service;

(b) Represent two (2) methods of performing the same procedure;

(c) Represent medically impossible or improbable use of CPT codes; or

(d) Are described in Current Procedural Terminology as inappropriate coding of procedure combinations.

(25)[~~(24)~~] "Non-Medicaid basis" means a scenario in which:

(a) A provider provides a service to a recipient;

(b) The Medicaid Program is not the payer for the service; and

(c) The recipient is liable for payment to the provider for the service.

(26)[~~(25)~~] "Other licensed medical professional" means a health care provider:

(a) Other than a physician, physician assistant, advanced practice registered nurse, certified registered nurse anesthetist, nurse midwife, or registered nurse; and

(b) Who has been approved to practice a medical specialty by the appropriate licensure board.

(27)[~~(26)~~] "Other provider preventable condition" is defined in 42 C.F.R. 447.26(b).

(28)[~~(27)~~] "Physician assistant" is defined in KRS 311.840(3).

(29)[~~(28)~~] "Physician injectable drug" means an injectable, infused, or inhaled drug or biological that:

(a) Is not typically self-administered;

(b) Is not excluded as a noncovered immunization or vaccine;

(c) Requires special handling, storage, shipping, dosing, or administration; and

(d) Is a rebatable drug.

(30)[~~(29)~~] "Podiatrist" is defined by KRS 205.510(12).

(31) "**Provider group" means a group of at least:**

(a) Two (2) individually licensed physicians who:

1. Are enrolled with the Medicaid Program individually and as a group; and

2. Share the same Medicaid provider number; or

(b) At least one (1) APRN and at least one (1) physician who:

1. Are enrolled with the Medicaid Program individually and as a group; and

2. Share the same Medicaid provider number.

(32)[~~(30)~~] "Rebatable drug" means a drug for which the drug's manufacturer has entered into or complied with a rebate agreement in accordance with 42 U.S.C. 1396r-8(a).

(33)[~~(32)~~][~~(31)~~] "Recipient" is defined by KRS 205.8451(9).

(34)[~~(33)~~][~~(32)~~] "Screening" means the evaluation of a recipient by a physician to determine:

(a) If a disease or medical condition is present; and

(b) If further evaluation, diagnostic testing, or treatment is needed.

(35)[~~(34)~~][~~(33)~~] "Supervising physician" is defined in KRS 311.840(4).

(36)[~~(35)~~][~~(34)~~] "Supervision" is defined in KRS 311.840(6).

(37)[~~(36)~~][~~(35)~~] "Timely filing" means receipt of a Medicaid claim by the department:

(a) Within twelve (12) months of the date the service was provided;

(b) Within twelve (12) months of the date retroactive eligibility was established; or

(c) Within six (6) months of the Medicare adjudication date if the service was billed to Medicare.

(38)[~~(37)~~][~~(36)~~] "Unlisted procedure or service" means a procedure or service:

(a) For which there is not a specific CPT code; and

(b) Which is billed using a CPT code designated for reporting unlisted procedures or services.

Section 2. Conditions of Participation. (1)(a) A participating physician shall:

1. Be licensed as a physician in the state in which the medical practice is located;

2. Comply with the:

a. Terms and conditions established in 907 KAR 1:005, 907 KAR 1:671, and 907 KAR 1:672;

b. Requirements regarding the confidentiality of personal records pursuant to 42 U.S.C. 1320d to 1320d-8 and 45 C.F.R. Parts 160 and 164;

3. Have the freedom to choose whether to provide services to a recipient; and

4. Notify the recipient referenced in paragraph (b) of this subsection of the provider's decision to accept or not accept the recipient on a Medicaid basis prior to providing any service to the recipient.

(b) A provider may provide a service to a recipient on a non-Medicaid basis:

1. If the recipient agrees to receive the service on a non-Medicaid basis before the service begins; and

2.[~~Whether or not~~] The[~~:~~

~~a. Provider is a Medicaid-participating provider; or~~

~~b.~~] service is not a Medicaid-covered service.

(c)1. If a provider renders a Medicaid-covered service to a recipient, regardless of if the service is billed through the provider's Medicaid provider number or any other entity including a non-Medicaid provider, the recipient shall not be billed for the service.

2. The department shall terminate from Medicaid Program participation a provider who participates in an arrangement where an entity bills a recipient for a Medicaid-covered service rendered by the provider.

(2) If a provider agrees to provide services to a recipient, the provider:

(a) Shall bill the department rather than the recipient for a covered service;

(b) May bill the recipient for a service not covered by Medicaid if the physician informed the recipient of noncoverage prior to providing the service; and

(c) Shall not bill the recipient for a service that is denied by the department on the basis of:

1. The service being incidental, integral, or mutually exclusive to a covered service or within the global period for a covered service;

2. Incorrect billing procedures, including incorrect bundling of services;

3. Failure to obtain prior authorization for the service; or

4. Failure to meet timely filing requirements.

(3)(a) If a provider receives any duplicate payment or overpayment from the department, regardless of reason, the provider shall return the payment to the department.

(b) Failure to return a payment to the department in accordance with paragraph (a) of this subsection may be:

1. Interpreted to be fraud or abuse; and

2. Prosecuted in accordance with applicable federal or state law.

(4)(a) A provider shall maintain a current health record for each recipient.

(b)1. A health record shall document each service provided to the recipient including the date of the service and the signature of the individual who provided the service.

2. The individual who provided the service shall date and sign the health record on the date that the individual provided the service.

(5)(a) Except as established in paragraph (b) of this subsection, a provider shall maintain a health record regarding a recipient for at least five (5) years from the date of the service or until any audit dispute or issue is resolved beyond five (5) years.

(b) If the secretary of the United States Department of Health and Human Services requires a longer document retention period than the period referenced in paragraph (a) of this subsection, pursuant to 42 C.F.R. 431.17, the period established by the secretary shall be the required period.

(6) A provider shall comply with 45 C.F.R. Part 164.

Section 3. Covered Services. (1) To be covered by the department, a service shall be:

(a) Medically necessary;

(b) Clinically appropriate pursuant to the criteria established in 907 KAR 3:130;

(c) Except as provided in subsection (2) of this section, furnished to a recipient through direct physician contact; and

(d) Eligible for reimbursement as a physician service.

(2) Direct physician contact between the billing physician and recipient shall not be required for:

(a) A service provided by a:

1. Medical resident if provided under the direction of a program participating teaching physician in accordance with 42 C.F.R. 415.174 and 415.184;

2. Locum tenens physician who provides direct physician contact;

3. Physician assistant in accordance with Section 7 of this administrative regulation; or

4. Locum tenens APRN who provides direct APRN contact;

(b) A radiology service, imaging service, pathology service, ultrasound study, echographic study, electrocardiogram, electromyogram, electroencephalogram, vascular study, or other service that is usually and customarily performed without direct physician contact;

(c) The telephone analysis of emergency medical systems or a cardiac pacemaker if provided under physician direction;

(d) A sleep disorder service; or

(e) A telehealth consultation provided in accordance with 907 KAR 3:170.

(3) A service provided by an other licensed medical professional shall be covered if the other licensed medical professional is:

(a) Employed by the supervising physician; and

(b) Licensed in the state of practice.

(4) A sleep disorder service shall be covered if performed in:

(a) A hospital;

(b) A sleep laboratory if the sleep laboratory has documentation demonstrating that it complies with criteria approved by the:

1. American Sleep Disorders Association; or

2. American Academy of Sleep Medicine; or

(c) An independent diagnostic testing facility that:

1. Is supervised by a physician trained in analyzing and interpreting sleep disorder recordings; and

2. Has documentation demonstrating that it complies with criteria approved by the:

a. American Sleep Disorders Association; or

b. American Academy of Sleep Medicine.

Section 4. Service Limitations. (1) A covered service provided to a lock-in recipient shall be limited to a service provided by the lock-in recipient's designated primary care provider or designated controlled substance prescriber unless:

(a) The service represents emergency care; or

(b) The lock-in recipient has been referred to the provider by the lock-in recipient's designated primary care provider.

(2) An EPSDT screening service shall be covered in accordance with 907 KAR 11:034.

(3) A laboratory procedure performed in a physician's office shall be limited to a procedure for which the physician has been certified in accordance with 42 C.F.R. Part 493.

(4) **An injectable drug listed on the Physician Injectable Drug List that is administered by a physician, APRN, or provider group shall be covered**[~~**Except for the following, a drug administered in a physician's office shall not be covered as a separate reimbursable service through the physicians' program:**~~

~~**(a) Rho (D) immune globulin injection;**~~

~~**(b) An injectable antineoplastic drug;**~~

~~**(c) Medroxyprogesterone acetate for contraceptive use, 150 mg;**~~

~~**(d) Penicillin G benzathine injection;**~~

~~**(e) Ceftriaxone sodium injection;**~~

~~**(f) Intravenous immune globulin injection;**~~

~~**(g) Sodium hyaluronate or hylan G-F for intra-articular injection;**~~

~~**(h) An intrauterine contraceptive device;**~~

~~**(i) An implantable contraceptive device;**~~

~~**(j) Long acting injectable risperidone; or**~~

~~**(k) An injectable, infused, or inhaled drug or biological that:**~~

~~**1. Is not typically self-administered;**~~

~~**2. Is not excluded as a noncovered immunization or vaccine; and**~~

~~**3. Requires special handling, storage, shipping, dosing, or administration**~~]

(5) A service allowed in accordance with 42 C.F.R. 441, Subpart E or Subpart F, shall be covered within the scope and limitations of 42 C.F.R. 441, Subpart E and Subpart F.

(6)(a) Except as provided in paragraph (b) of this subsection, coverage for a service designated as a psychiatry service CPT code and provided by a physician shall be limited to four (4) services, per physician, per recipient, per twelve (12) months.

(b) Coverage for a service designated as a psychiatry service CPT code that is provided by a board certified or board eligible psychiatrist or by an advanced practice registered nurse with a specialty in psychiatry shall not be subject to the limits established in paragraph (a) of this subsection.

(c) Coverage for an evaluation and management service shall be limited to one (1) per physician, per recipient, per date of service.

(d) Coverage for a fetal diagnostic ultrasound procedure shall be limited to two (2) per nine (9) month period per recipient unless the diagnosis code justifies the medical necessity of an additional procedure.

(7) An anesthesia service shall be covered if:

(a) Administered by:

1. An anesthesiologist who remains in attendance throughout the procedure; or

2. An individual who:

a. Is licensed in Kentucky to practice anesthesia;

b. Is licensed in Kentucky within his or her scope of practice; and

c. Remains in attendance throughout the procedure;

(b) Medically necessary; and

(c) Not provided as part of an all-inclusive CPT code.

(8) The following shall not be covered:

(a) An acupuncture service;

(b) An autopsy;

(c) A cast or splint application in excess of the limits established in 907 KAR 3:010;

(d) Except for therapeutic bandage lenses, contact lenses;

(e) A hysterectomy performed for the purpose of sterilization;

(f) Lasik surgery;

(g) Paternity testing;

(h) A procedure performed for cosmetic purposes only;

(i) A procedure performed to promote or improve fertility;

(j) Radial keratotomy;

(k) A thermogram;

(l) An experimental service which is not in accordance with current standards of medical practice;

(m) A service which does not meet the requirements established in Section 3(1) of this administrative regulation;

(n) Medical direction of an anesthesia service; or

(o) Medical assistance for an other provider preventable condition in accordance with 907 KAR 14:005.

Section 5. Prior Authorization Requirements for Recipients Who are Not Enrolled with a Managed Care Organization. (1) The following procedures for a recipient who is not enrolled with a managed care organization shall require prior authorization by the department:

(a) Magnetic resonance imaging;

(b) Magnetic resonance angiogram;

(c) Magnetic resonance spectroscopy;

(d) Positron emission tomography;

(e) Cineradiography or videoradiography;

(f) Xeroradiography;

(g) Ultrasound subsequent to second obstetric ultrasound;

(h) Myocardial imaging;

(i) Cardiac blood pool imaging;

(j) Radiopharmaceutical procedures;

(k) Gastric restrictive surgery or gastric bypass surgery;

(l) A procedure that is commonly performed for cosmetic purposes;

(m) A surgical procedure that requires completion of a federal consent form; or

(n) A covered unlisted procedure or service.

(2)(a) Prior authorization by the department shall not be a guarantee of recipient eligibility.

(b) Eligibility verification shall be the responsibility of the provider.

(3) The prior authorization requirements established in subsection (1) of this section shall not apply to:

(a) An emergency service;

(b) A radiology procedure if the recipient has a cancer or transplant diagnosis code; or

(c) A service provided to a recipient in an observation bed.

(4) A referring physician, a physician who wishes to provide a given service, a podiatrist, a chiropractor, or an advanced practice registered nurse:

(a) May request prior authorization from the department; and

(b) If requesting prior authorization, shall request prior authorization by:

1. Mailing or faxing:

a. A written request to the department with information sufficient to demonstrate that the service meets the requirements established in Section 3(1) of this administrative regulation; and

b. If applicable, any required federal consent forms; or

2. Submitting a request via the department's web-based portal with information sufficient to demonstrate that the service meets the requirements established in Section 3(1) of this administrative regulation.

Section 6. Therapy Service Limits. (1) Speech-language pathology services shall be limited to twenty (20) service visits per recipient per calendar year, except as established in subsection (4) of this section.

(2) Physical therapy services shall be limited to twenty (20) service visits per recipient per calendar year, except as established in subsection (4) of this section.

(3) Occupational therapy services shall be limited to twenty (20) service visits per recipient per calendar year, except as established in subsection (4) of this section.

(4) A service in excess of the limits established in subsection (1), (2), or (3) of this section shall be approved if the additional service is determined to be medically necessary by:

(a) The department, if the recipient is not enrolled with a managed care organization; or

(b) Managed care organization in which the enrollee is enrolled, if the recipient is an enrollee.

(5) Prior authorization by the department shall be required for each service visit that exceeds the limit established in subsection (1), (2), or (3) of this section for a recipient who is not enrolled with a managed care organization.

Section 7. Physician Assistant Services. (1) Except for a service limitation specified in subsections (2) or (3) of this section, a service provided by a physician assistant in common practice with a Medicaid-enrolled physician shall be covered if:

(a) The service meets the requirements established in Section 3(1) of this administrative regulation;

(b) The service is within the legal scope of certification of the physician assistant;

(c) The service is billed under the physician's individual provider number with the physician assistant's number included; and

(d) The physician assistant complies with:

1. KRS 311.840 to 311.862; and

2. Section 2(1)(b) of this administrative regulation.

(2) A same service performed by a physician assistant and a physician **or an APRN and a physician** on the same day within a common practice shall be considered as one (1) covered service.

(3) The following physician assistant services shall not be covered:

(a) A physician noncovered service specified in Section 4(8) of this administrative regulation;

(b) An anesthesia service;

(c) An obstetrical delivery service; or

(d) A service provided in assistance of surgery.

Section 8. Behavioral Health Services Covered Pursuant to 907 KAR 15:010. The requirements and provisions established in 907 KAR 15:010 for a service covered pursuant to 907 KAR 15:010 shall apply if the service is provided by:

(1) A physician who is the billing provider;

(2) **A provider group that is the billing provider;**

(3) An APRN who works for a**:**

(a) Physician who is the billing provider; or

(b) Provider group that is the billing provider;
(4) A physician assistant who works for a:
(a) Physician who is the billing provider; or
(b) Provider group that is the billing provider;
(5) A licensed professional clinical counselor who works for a:
(a) Physician who is the billing provider; or
(b) Provider group that is the billing provider;
(6) A licensed clinical social worker who works for a:
(a) Physician who is the billing provider; or
(b) Provider group that is the billing provider;
(7) A licensed marriage and family therapist who works for a:
(a) Physician who is the billing provider; or
(b) Provider group that is the billing provider;
(8) A licensed professional art therapist who works for a:
(a) Physician who is the billing provider; or
(b) Provider group that is the billing provider; or
(9) A licensed behavior analyst who works for a:
(a) Physician who is the billing provider; or
(b) Provider group that is the billing provider;
(10)[(3)] A behavioral health practitioner under supervision who works for a**:**
(a) Physician who is the billing provider**; or**
(b) Provider group that is the billing provider.

Section 9. No Duplication of Service. (1) The department shall not reimburse for a service provided to a recipient by more than one (1) provider of any program in which the service is covered during the same time period.

(2) For example, if a recipient is receiving a speech-language pathology service from a speech-language pathologist enrolled with the Medicaid Program, the department shall not reimburse for the same service provided to the same recipient during the same time period via the physicians' services program.

Section 10.[~~9.~~] Third Party Liability. A provider shall comply with KRS 205.622.

Section 11.[~~10.~~] Use of Electronic Signatures. (1) The creation, transmission, storage, and other use of electronic signatures and documents shall comply with the requirements established in KRS 369.101 to 369.120.

(2) A provider that chooses to use electronic signatures shall:

(a) Develop and implement a written security policy that shall:

1. Be adhered to by each of the provider's employees, officers, agents, or contractors;

2. Identify each electronic signature for which an individual has access; and

3. Ensure that each electronic signature is created, transmitted, and stored in a secure fashion;

(b) Develop a consent form that shall:

1. Be completed and executed by each individual using an electronic signature;

2. Attest to the signature's authenticity; and

3. Include a statement indicating that the individual has been notified of his or her responsibility in allowing the use of the electronic signature; and

(c) Provide the department, immediately upon request, with:

1. A copy of the provider's electronic signature policy;

2. The signed consent form; and

3. The original filed signature.

Section 12.[~~11.~~] Auditing Authority. The department shall have the authority to audit any claim, medical record, or documentation associated with the claim or medical record.

Section 13.[~~12.~~] Federal Approval and Federal Financial Participation. The department's coverage of services pursuant to this administrative regulation shall be contingent upon:

(1) Receipt of federal financial participation for the coverage; and

(2) Centers for Medicare and Medicaid Services' approval for the coverage.

Section 14.[~~13.~~] Appeal Rights. An appeal of a department decision regarding:

(1) A Medicaid recipient who is not enrolled with a managed care organization based upon an application of this administrative regulation shall be in accordance with 907 KAR 1:563; or

(2) An enrollee based upon an application of this administrative regulation shall be in accordance with 907 KAR 17:010.

Section 15. Incorporation by Reference. (1) The "Physician Injectable Drug List", February 21, 2014, is incorporated by reference.

(2) This material may be inspected, copied, or obtained, subject to applicable copyright law:

(a) At the Department for Medicaid Services, 275 East Main Street, Frankfort, Kentucky, Monday through Friday, 8:00 a.m. to 4:30 p.m.; or

(b) Online at the department's Web site at http://www.chfs.ky.gov/dms/incorporated.htm.

LAWRENCE KISSNER, Commissioner
AUDREY TAYSE HAYNES, Secretary

APPROVED BY AGENCY: December 10, 2014

FILED WITH LRC: December 11, 2014 at 3 p.m.

CONTACT PERSON: Tricia Orme, tricia.orme@ky.gov, Office of Legal Services, 275 East Main Street 5 W-B, Frankfort, Kentucky 40601, phone (502) 564-7905, fax (502) 564-7573.

REGULATORY IMPACT ANALYSIS AND TIERING STATEMENT

Contact Person: Stuart Owen

(1) Provide a brief summary of:

(a) What this administrative regulation does: This administrative regulation establishes the Medicaid program coverage provisions and requirements regarding physician services.

(b) The necessity of this administrative regulation: This administrative regulation is necessary to establish the Medicaid program coverage provisions and requirements regarding physician services.

(c) How this administrative regulation conforms to the content of the authorizing statutes: This administrative regulation conforms to the content of the authorizing statutes by establishing the Medicaid program coverage provisions and requirements regarding physician services.

(d) How this administrative regulation currently assists or will assist in the effective administration of the statutes: This administrative regulation will assist in the effective administration of the authorizing statutes by establishing the Medicaid program coverage provisions and requirements regarding physician services.

(2) If this is an amendment to an existing administrative regulation, provide a brief summary of:

(a) How the amendment will change this existing administrative regulation: The amendments eliminate the option for a Medicaid-enrolled provider to provide Medicaid-covered services to a Medicaid recipient on the side (cash only basis apart from the Medicaid program) and clarify that the requirements established in DMS's independent behavioral health services administrative regulation (907 KAR 15:010) apply to such services provided by a physician, advanced practice registered nurse working for a physician, or a behavioral health practitioner under supervision working for a physician. The amendment after comments clarifies that a Medicaid recipient shall not be charged for a Medicaid-covered service rendered to the recipient by a Medicaid-enrolled provider regardless of whether the provider is rendering the service on behalf of the provider's own practice or of another practice; establishes that DMS will dis-enroll from the Medicaid Program a Medicaid-enrolled provider who participates in an arrangement where a Medicaid recipient is charged for a Medicaid-covered service rendered to the recipient by the Medicaid-enrolled provider; inserts a definition of "provider group" which may be two (2) or

more physicians or a physician and an advanced practice registered nurse who form a group practice; incorporates by reference the Physician Injectable Drug List which lists all Medicaid-covered injectable drugs; and clarifies the various behavioral health practitioners (who can provide behavioral health services in a physician's practice) to whom 907 KAR 15:010, Coverage provisions and requirements regarding behavioral health services provided by independent providers.

(b) The necessity of the amendment to this administrative regulation: The amendment regarding a non-Medicaid basis corrects an error that was overlooked in the internal review of the original administrative regulation. This non-Medicaid basis amendment is necessary to protect the health, safety, and welfare of Medicaid recipients as a provider who provides Medicaid-covered services to a Medicaid recipient apart from the Medicaid umbrella may circumvent the requirements (including safeguards to protect recipients) in providing the service. Additionally, a provider could exploit the non-Medicaid basis option if the provider wanted a payment higher than that paid by the Medicaid Program for a given service by informing the Medicaid recipient that the provider would only offer the service if the recipient paid in cash. Recipients would be vulnerable to such exploitation. For example, the "cash only" scenario has been used with suboxone and opioid dependence treatment for example. Suboxone is a drug used in tandem with opioid dependence treatment and some providers in Kentucky only offer the drug and treatment on a cash only (non-Medicaid/non-commercial insurer) basis and at a high price to individuals. An individual who is addicted to opioids is vulnerable to such exploitation. The amendment regarding the applicability of 907 KAR 15:010 (Coverage provisions and requirements regarding behavioral health services provided by independent providers) is necessary for clarity. The necessity of the amendment after comments is necessary to clarify provisions and to replace the reference to a few injectable drugs covered under the Medicaid Program with the full list of such injectable drugs.

(c) How the amendment conforms to the content of the authorizing statutes: The amendment conforms to the content of the authorizing statutes by enhancing the health, safety, and welfare of Medicaid recipients and by clarifying policies. The amendment after comments conforms to the content of the authorizing statutes by clarifying policies.

(d) How the amendment will assist in the effective administration of the statutes: The amendment will assist in the effective administration of the authorizing statutes by enhancing the health, safety, and welfare of Medicaid recipients and by clarifying policies. The amendment after comments will assist in the effective administration of the authorizing statutes by clarifying policies.

(3) List the type and number of individuals, businesses, organizations, or state and local government affected by this administrative regulation: The administrative regulation affects physicians enrolled in the Medicaid program. Currently, there are over 14,000 individual physicians and over 1,700 physician group practices participating in the Medicaid Program. Medicaid recipients who receive services will be affected by the amendment.

(4) Provide an analysis of how the entities identified in question (3) will be impacted by either the implementation of this administrative regulation, if new, or by the change, if it is an amendment, including:

(a) List the actions that each of the regulated entities identified in question (3) will have to take to comply with this administrative regulation or amendment: Medicaid providers who provided Medicaid-covered services to Medicaid recipients will have to bill the Medicaid Program for such services and not bill the recipient.

(b) In complying with this administrative regulation or amendment, how much will it cost each of the entities identified in question (3): No cost is imposed on providers.

(c) As a result of compliance, what benefits will accrue to the entities identified in question (3): As a result of the amendment Medicaid recipients will benefit by not being potential victims of Medicaid providers who could use the non-Medicaid basis option to exploit them.

(5) Provide an estimate of how much it will cost to implement this administrative regulation:

(a) Initially: The Department for Medicaid Services (DMS) anticipates no additional cost as a result of the amendment.

(b) On a continuing basis: DMS anticipates no additional cost as a result of the amendment.

(6) What is the source of the funding to be used for the implementation and enforcement of this administrative regulation: The sources of revenue to be used for implementation and enforcement of this administrative regulation are federal funds authorized under the Social Security Act, Title XIX and matching funds of general fund appropriations.

(7) Provide an assessment of whether an increase in fees or funding will be necessary to implement this administrative regulation, if new, or by the change if it is an amendment: The current fiscal year budget will not need to be adjusted to provide funds for implementing this administrative regulation.

(8) State whether or not this administrative regulation establishes any fees or directly or indirectly increases any fees: This administrative regulation does not establish or increase any fees.

(9) Tiering: Is tiering applied? Tiering was not appropriate in this administrative regulation because the administrative regulation applies equally to all those individuals or entities regulated by it.

FEDERAL MANDATE ANALYSIS COMPARISON

1. Federal statute or regulation constituting the federal mandate. 42 U.S.C. 1396a(a)(10) and 42 U.S.C. 1396a(a)(19).

2. State compliance standards. KRS 205.520(3) states, "Further, it is the policy of the Commonwealth to take advantage of all federal funds that may be available for medical assistance. To qualify for federal funds the secretary for health and family services may by regulation comply with any requirement that may be imposed or opportunity that may be presented by federal law. Nothing in KRS 205.510 to 205.630 is intended to limit the secretary's power in this respect."

3. Minimum or uniform standards contained in the federal mandate. 42 U.S.C. 1396a(a)(10) mandates that a state's Medicaid Program cover physician services. 42 U.S.C. 1396a(a)(19) requires Medicaid programs to provide care and services consistent with the best interests of Medicaid recipients.

4. Will this administrative regulation impose stricter requirements, or additional or different responsibilities or requirements, than those required by the federal mandate? The amendment does not impose stricter, additional or different requirements than those required by the federal mandate.

5. Justification for the imposition of the stricter standard, or additional or different responsibilities or requirements. Stricter requirements are not imposed.

FISCAL NOTE ON STATE OR LOCAL GOVERNMENT

1. What units, parts or divisions of state or local government (including cities, counties, fire departments, or school districts) will be impacted by this administrative regulation? This amendment will affect all physicians enrolled in the Medicaid program who are not reimbursed via a managed care organization.

2. Identify each state or federal statute or federal regulation that requires or authorizes the action taken by the administrative regulation. KRS 194A.030(2), 194A.050(1), 205.520(3), and 42 C.F.R. 447.26.

3. Estimate the effect of this administrative regulation on the expenditures and revenues of a state or local government agency (including cities, counties, fire departments, or school districts) for the first full year the administrative regulation is to be in effect.

(a) How much revenue will this administrative regulation generate for the state or local government (including cities, counties, fire departments, or school districts) for the first year? This amendment will not generate any additional revenue for state or local governments during the first year of implementation.

(b) How much revenue will this administrative regulation generate for the state or local government (including cities, counties, fire departments, or school districts) for subsequent

years? This amendment will not generate any additional revenue for state or local governments during subsequent years of implementation.

(c) How much will it cost to administer this program for the first year? DMS anticipates no additional cost as a result of the amendment.

(d) How much will it cost to administer this program for subsequent years? DMS anticipates no additional cost as a result of the amendment.

Note: If specific dollar estimates cannot be determined, provide a brief narrative to explain the fiscal impact of the administrative regulation.

Revenues (+/-):

Expenditures (+/-):

Other Explanation: No additional expenditures are necessary to implement this amendment.

CABINET FOR HEALTH AND FAMILY SERVICES
Department for Medicaid Services
Division of Policy and Operations
(Amended After Comments)

907 KAR 15:070. Coverage provisions and requirements regarding services provided by residential crisis stabilization units.

RELATES TO: KRS 205.520, 42 U.S.C. 1396a(a)(10)(B), 42 U.S.C. 1396a(a)(23)

STATUTORY AUTHORITY: KRS 194A.030(2), 194A.050(1), 205.520(3)

NECESSITY, FUNCTION, AND CONFORMITY: The Cabinet for Health and Family Services, Department for Medicaid Services, has a responsibility to administer the Medicaid Program. KRS 205.520(3) authorizes the cabinet, by administrative regulation, to comply with any requirement that may be imposed or opportunity presented by federal law to qualify for federal Medicaid funds. This administrative regulation establishes the coverage provisions and requirements regarding Medicaid Program behavioral health services provided by residential crisis stabilization units.

Section 1. General Coverage Requirements. (1) For the department to reimburse for a service covered under this administrative regulation, the service shall be:

(a) Medically necessary; and

(b) Provided:

1. To a recipient; and

2. By a residential crisis stabilization unit that meets the provider participation requirements established in Section 2 of this administrative regulation.

(2)(a) Direct contact between a practitioner and a recipient shall be required for each service.

(b) A service that does not meet the requirement in paragraph (a) of this subsection shall not be covered.

(3) A service shall be:

(a) Stated in the recipient's treatment plan; and

(b) Provided in accordance with the recipient's treatment plan.

Section 2. Provider Participation. (1) To be eligible to provide services under this administrative regulation, a residential crisis stabilization unit shall:

(a) Be currently enrolled in the Kentucky Medicaid Program in accordance with 907 KAR 1:672;

(b) Except as established in subsection (2) of this section, be currently participating in the Kentucky Medicaid Program in accordance with 907 KAR 1:671;

(c) Be licensed as a residential crisis stabilization unit in accordance with 902 KAR 20:440;

(d) Comply with the requirements established in 902 KAR 20:440;

(e) Have:

1. For each service it provides, the capacity to provide the full range of the service as established in this administrative regulation;

2. Demonstrated experience in serving individuals with behavioral health disorders;

3. The administrative capacity to ensure quality of services;

4. A financial management system that provides documentation of services and costs; and

5. The capacity to document and maintain individual case records;

(f) Be a community-based, residential program that offers an array of services including:

1. Screening;

2. Assessment;

3. Treatment planning;

4. Individual outpatient therapy;

5. Group outpatient therapy;

6. Psychiatric services;

7. Family outpatient therapy at the option of the residential crisis stabilization unit; or

8. Peer support at the option of the residential crisis stabilization unit;

(g) Provide services in order to:

1. Stabilize a crisis and divert an individual from a higher level of care;

2. Stabilize an individual and provide treatment for acute withdrawal, if applicable; and

3. Re-integrate an individual into the individual's community or other appropriate setting in a timely fashion;

(h) Not be part of a hospital;

(i) Be used when an individual:

1. Is experiencing a behavioral health crisis that cannot be safely accommodated within the individual's community; and

2. Needs overnight care that is not hospitalization;

(j) **Except as established in subsection (2)(a) of this section,** not contain more than sixteen (16) beds;

(k) **Except as established in subsection (2)(b) of this section,** not be part of multiple units comprising one (1) facility with more than sixteen (16) beds in aggregate;

(l) Agree to provide services in compliance with federal and state laws regardless of age, sex, race, creed, religion, national origin, handicap, or disability;

(m) Comply with the Americans with Disabilities Act (42 U.S.C. 12101 et seq.) and any amendments to the Act;

(n) Have the capacity to employ staff authorized to provide treatment services in accordance with this section and to coordinate the provision of services among team members;

(o) Have the capacity to provide the full range of residential crisis stabilization services as stated in this paragraph and on a twenty-four (24) hour a day, seven (7) day a week, every day of the year basis;

(p) Have access to a board certified or board-eligible psychiatrist twenty-four (24) hours a day, seven (7) days a week, every day of the year; and

(q) Have knowledgeable staff regarding substance use disorders.

(2) **If every recipient receiving services in the:**

(a) Single unit is under the age of twenty-one (21) years or over the age of sixty-five (65) years, the limit of sixteen (16) beds established in subsection (1)(j) of this section shall not apply; or

(b) Multiple units is under the age of twenty-one (21) years or over the age of sixty-five (65) years, the limit of sixteen (16) beds established in subsection (1)(k) of this section shall not apply.

(3) In accordance with 907 KAR 17:015, Section 3(3), a residential crisis stabilization unit which provides a service to an enrollee shall not be required to be currently participating in the fee-for-service Medicaid Program.

Section 3. Covered Services. (1)(a) Except as specified in the requirements stated for a given service, the services covered may be provided for:

1. A mental health disorder;

2. A substance use disorder; or

3. Co-occurring mental health and substance use disorders.

(b) Residential crisis stabilization services shall be provided in a residential crisis stabilization unit.

(2) Residential crisis stabilization services shall include:

(a) A screening provided by:

1. A licensed psychologist;
2. A licensed psychological practitioner;
3. A licensed clinical social worker;
4. A licensed professional clinical counselor;
5. A licensed professional art therapist;
6. A licensed marriage and family therapist;
7. A physician;
8. A psychiatrist;
9. An advanced practice registered nurse; or
10. A behavioral health practitioner under supervision except for a licensed assistant behavior analyst;

(b) An assessment provided by:

1. A licensed psychologist;
2. A licensed psychological practitioner;
3. A licensed clinical social worker;
4. A licensed professional clinical counselor;
5. A licensed professional art therapist;
6. A licensed marriage and family therapist;
7. A physician;
8. A psychiatrist;
9. An advanced practice registered nurse;
10. A licensed behavior analyst; or
11. A behavioral health practitioner under supervision**[~~except for a certified alcohol and drug counselor~~]**;

(c) Individual outpatient therapy or group outpatient therapy provided by:

1. A licensed psychologist;
2. A licensed psychological practitioner;
3. A licensed clinical social worker;
4. A licensed professional clinical counselor;
5. A licensed professional art therapist;
6. A licensed marriage and family therapist;
7. A physician;
8. A psychiatrist;
9. An advanced practice registered nurse;
10. A licensed behavior analyst; or
11. A behavioral health practitioner under supervision**[~~except for a certified alcohol and drug counselor~~]**;

(d) Treatment planning provided by:

1. A licensed psychologist;
2. A licensed psychological practitioner;
3. A licensed clinical social worker;
4. A licensed professional clinical counselor;
5. A licensed professional art therapist;
6. A licensed marriage and family therapist;
7. A physician;
8. A psychiatrist;
9. An advanced practice registered nurse;
10. A licensed behavior analyst; or
11. A behavioral health practitioner under supervision except for a certified alcohol and drug counselor;

(e) Psychiatric services provided by:

1. A psychiatrist; or
2. An APRN; or

(f) At the option of the residential crisis stabilization unit:

1. Family outpatient therapy provided by:

a. A licensed psychologist;
b. A licensed psychological practitioner;
c. A licensed clinical social worker;
d. A licensed professional clinical counselor;
e. A licensed professional art therapist;
f. A licensed marriage and family therapist;
g. A physician;
h. A psychiatrist;
i. An advanced practice registered nurse; or
j. A behavioral health practitioner under supervision except for a**[~~:~~**

[~~(i) Certified alcohol and drug counselor; or~~

[~~(ii)~~] licensed assistant behavior analyst; or

2. Peer support provided by a peer support specialist working under the supervision of**:**

a. An approved behavioral health service provider**; or**

b. A certified alcohol and drug counselor.

(3)(a) A screening shall:

1. Establish the need for a level of care evaluation to determine the most appropriate and least restrictive service to maintain the safety of the individual who may have a mental health disorder, substance use disorder, or co-occurring disorders;
2. Not establish the presence or specific type of disorder; and
3. Establish the need for an in-depth assessment of the number and duration of risk factors including:

a. Imminent danger and availability of lethal weapons;
b. Verbalization of suicidal or homicidal risk;
c. Need of immediate medical attention;
d. Positive and negative coping strategies;
e. Lack of family or social supports;
f. Active psychiatric diagnosis; or
g. Current drug and alcohol use.

(b) An assessment shall:

1. Include gathering information and engaging in a process with the individual that enables the practitioner to:

a. Establish the presence or absence of a mental health disorder, a substance use disorder, or co-occurring disorders;
b. Determine the individual's readiness for change;
c. Identify the individual's strengths or problem areas that may affect the treatment and recovery processes; and
d. Engage the individual in developing an appropriate treatment relationship;

2. Establish or rule out the existence of a clinical disorder or service need;
3. Include working with the individual to develop a treatment and service plan; and
4. Not include psychological or psychiatric evaluations or assessments.

(c) Individual outpatient therapy shall:

1. Be provided to promote the:

a. Health and wellbeing of the individual; or
b. Recovery from a substance related disorder, a mental health disorder, or co-occurring related disorders;

2. Consist of:

a. A face-to-face, one (1) on one (1) encounter between the provider and recipient; and
b. A behavioral health therapeutic intervention provided in accordance with the recipient's identified crisis treatment plan;

3. Be aimed at:

a. Reducing adverse symptoms;
b. Reducing or eliminating the presenting problem of the recipient; and
c. Improving functioning; and

4. Not exceed three (3) hours per day unless additional time is medically necessary.

(d)1. Group outpatient therapy shall:

a. Be a behavioral health therapeutic intervention provided in accordance with a recipient's identified crisis treatment plan;
b. Be provided to promote the:
(i) Health and wellbeing of the individual; or
(ii) Recovery from a substance related disorder, a mental health disorder, or co-occurring related disorders;
c. Consist of a face-to-face behavioral health therapeutic intervention provided in accordance with the recipient's identified crisis treatment plan;
d. Be provided to a recipient in a group setting:
(i) Of nonrelated individuals; and
(ii) Not to exceed twelve (12) individuals in size;
e. Focus on the psychological needs of the recipients as evidenced in each recipient's crisis treatment plan;
f. Center on goals including building and maintaining healthy relationships, personal goals setting, and the exercise of personal judgment;
g. Not include physical exercise, a recreational activity, an educational activity, or a social activity; and
h. Not exceed three (3) hours per day per recipient unless

additional time is medically necessary.

2. The group shall have a:

a. Deliberate focus; and

b. Defined course of treatment.

3. The subject of group outpatient therapy shall relate to each recipient participating in the group.

4. The provider shall keep individual notes regarding each recipient within the group and within each recipient's health record.

(e)1. Treatment planning shall:

a. Involve assisting a recipient in creating an individualized plan for services needed;

b. Involve restoring a recipient's functional level to the recipient's best possible functional level; and

c. Be performed using a person-centered planning process.

2. A service plan:

a. Shall be directed by the recipient;

b. Shall include practitioners of the recipient's choosing; and

c. May include:

(i) A mental health advance directive being filed with a local hospital;

(ii) A crisis plan; or

(iii) A relapse prevention strategy or plan.

(f)1. Family outpatient therapy shall consist of a face-to-face behavioral health therapeutic intervention provided:

a. Through scheduled therapeutic visits between the therapist and the recipient and at least one (1) member of the recipient's family; and

b. To address issues interfering with the relational functioning of the family and to improve interpersonal relationships within the recipient's home environment.

2. Family outpatient therapy shall:

a. Be provided to promote:

(i) The health and wellbeing of the individual; or

(ii) Recovery from a substance use disorder, a mental health disorder, or co-occurring related disorders; and

b. Not exceed three (3) hours per day per individual unless additional time is medically necessary.

(g)1. Peer support services shall:

a. Be social and emotional support that is provided by an individual who is experiencing a mental health disorder, a substance use disorder, or co-occurring mental health and substance use disorders to a recipient by sharing a similar mental health disorder, substance use disorder, or co-occurring mental health and substance use disorders in order to bring about a desired social or personal change;

b. Be an evidence-based practice;

c. Be structured and scheduled non-clinical therapeutic activities with an individual recipient or a group of recipients;

d. Be provided by a self-identified consumer, parent, or family member:

(i) Of a child consumer of mental health disorder services, substance use disorder services, or co-occurring mental health disorder services and substance use disorder services; and

(ii) Who has been trained and certified in accordance with 908 KAR 2:220, 908 KAR 2:230, or 908 KAR 2:240;

e. Promote socialization, recovery, self-advocacy, preservation, and enhancement of community living skills for the recipient;

f. Be coordinated within the context of a comprehensive, individualized treatment plan developed through a person-centered planning process;

g. Be identified in each recipient's treatment plan; and

h. Be designed to directly contribute to the recipient's individualized goals as specified in the recipient's treatment plan.

2. To provide peer support services, a residential crisis stabilization unit shall:

a. Employ peer support specialists who are qualified to provide peer support services in accordance with 908 KAR 2:220, 908 2:230, or 908 2:240;

b. Use an approved behavioral health services provider **or certified alcohol and drug counselor** to supervise peer support specialists;

c. Have the capacity to coordinate the provision of services among team members; and

d. Have the capacity to provide on-going continuing education and technical assistance to peer support specialists.

(4)**[~~(a) The requirements established in 908 KAR 1:370 shall apply to any provider of a service to a recipient for a substance use disorder.~~**

~~(b) The detoxification program requirements established in 908 KAR 1:370 shall apply to a provider of a detoxification service.~~

~~(5)~~] The extent and type of a screening shall depend upon the problem of the individual seeking or being referred for services.

(5)[~~(6)~~] A diagnosis or clinical impression shall be made using terminology established in the most current edition of the American Psychiatric Association Diagnostic and Statistical Manual of Mental Disorders.

(6)[~~(7)~~] The department shall not reimburse for a service billed by or on behalf of an entity or individual who is not a billing provider.

Section 4. Additional Limits and Non-covered Services or Activities. (1) The following services or activities shall not be covered under this administrative regulation:

(a) A service provided to:

1. A resident of:

a. A nursing facility; or

b. An intermediate care facility for individuals with an intellectual disability;

2. An inmate of a federal, local, or state:

a. Jail;

b. Detention center; or

c. Prison; or

3. An individual with an intellectual disability without documentation of an additional psychiatric diagnosis;

(b) Psychiatric or psychological testing for another agency, including a court or school, that does not result in the individual receiving psychiatric intervention or behavioral health therapy from the residential crisis stabilization unit;

(c) A consultation or educational service provided to a recipient or to others;

(d) A telephone call, an email, a text message, or other electronic contact that does not meet the requirements stated in the definition of "face-to-face";

(e) Travel time;

(f) A field trip;

(g) A recreational activity;

(h) A social activity; or

(i) A physical exercise activity group.

(2) Residential crisis stabilization services shall not include:

(a) Room and board;

(b) Educational services;

(c) Vocational services;

(d) Job training services;

(e) Habilitation services;

(f) Services to an inmate in a public institution pursuant to 42 C.F.R. 435.1010;

(g) Services to an individual residing in an institution for mental diseases pursuant to 42 C.F.R. 435.1010;

(h) Recreational activities;

(i) Social activities; or

(j) Services required to be covered elsewhere in the state plan.

(3)(a) A consultation by one (1) provider or professional with another shall not be covered under this administrative regulation.

(b) A third party contract shall not be covered under this administrative regulation.

Section 5. No Duplication of Service. (1) The department shall not reimburse for a service provided to a recipient by more than one (1) provider, of any program in which the service is covered, during the same time period.

(2) For example, if a recipient is receiving a residential crisis stabilization service from a community mental health center, the department shall not reimburse for the same service provided to the same recipient during the same time period by a residential

crisis stabilization unit.

Section 6. Records Maintenance, Documentation, Protection, and Security. A residential crisis stabilization unit shall maintain a current health record for each recipient in accordance with 902 KAR 20:440.

Section 7. Medicaid Program Participation Compliance. (1) A residential crisis stabilization unit shall comply with:

(a) 907 KAR 1:671;

(b) 907 KAR 1:672; and

(c) All applicable state and federal laws.

(2)(a) If a residential crisis stabilization unit receives any duplicate payment or overpayment from the department, regardless of reason, the residential crisis stabilization unit shall return the payment to the department.

(b) Failure to return a payment to the department in accordance with paragraph (a) of this subsection may be:

1. Interpreted to be fraud or abuse; and

2. Prosecuted in accordance with applicable federal or state law.

(3)(a) When the department makes payment for a covered service and the residential crisis stabilization unit accepts the payment:

1. The payment shall be considered payment in full;

2. A bill for the same service shall not be given to the recipient; and

3. Payment from the recipient for the same service shall not be accepted by the residential crisis stabilization unit.

(b)1. A residential crisis stabilization unit may bill a recipient for a service that is not covered by the Kentucky Medicaid Program if the:

a. Recipient requests the service; and

b. Residential crisis stabilization unit makes the recipient aware in advance of providing the service that the:

(i) Recipient is liable for the payment; and

(ii) Department is not covering the service.

2. If a recipient makes payment for a service in accordance with subparagraph 1 of this paragraph, the:

a. Residential crisis stabilization unit shall not bill the department for the service; and

b. Department shall not:

(i) Be liable for any part of the payment associated with the service; and

(ii) Make any payment to the residential crisis stabilization unit regarding the service.

(4)(a) A residential crisis stabilization unit attests by the residential crisis stabilization unit's staff's or representative's signature that any claim associated with a service is valid and submitted in good faith.

(b) Any claim and substantiating record associated with a service shall be subject to audit by the:

1. Department or its designee;

2. Cabinet for Health and Family Services, Office of Inspector General or its designee;

3. Kentucky Office of Attorney General or its designee;

4. Kentucky Office of the Auditor for Public Accounts or its designee; or

5. United States General Accounting Office or its designee.

(c) If a residential crisis stabilization unit receives a request from the department to provide a claim, related information, related documentation, or record for auditing purposes, the residential crisis stabilization unit shall provide the requested information to the department within the timeframe requested by the department.

(d)1. All services provided shall be subject to review for recipient or provider abuse.

2. Willful abuse by a residential crisis stabilization unit shall result in the suspension or termination of the residential crisis stabilization unit from Medicaid Program participation.

Section 8. Third Party Liability. A residential crisis stabilization unit shall comply with KRS 205.622.

Section 9. Use of Electronic Signatures. (1) The creation, transmission, storage, and other use of electronic signatures and documents shall comply with the requirements established in KRS 369.101 to 369.120.

(2) A residential crisis stabilization unit that chooses to use electronic signatures shall:

(a) Develop and implement a written security policy that shall:

1. Be adhered to by each of the residential crisis stabilization unit's employees, officers, agents, or contractors;

2. Identify each electronic signature for which an individual has access; and

3. Ensure that each electronic signature is created, transmitted, and stored in a secure fashion;

(b) Develop a consent form that shall:

1. Be completed and executed by each individual using an electronic signature;

2. Attest to the signature's authenticity; and

3. Include a statement indicating that the individual has been notified of his or her responsibility in allowing the use of the electronic signature; and

(c) Provide the department, immediately upon request, with:

1. A copy of the residential crisis stabilization unit's electronic signature policy;

2. The signed consent form; and

3. The original filed signature.

Section 10. Auditing Authority. The department shall have the authority to audit any:

(1) Claim;

(2) Medical record; or

(3) Documentation associated with any claim or medical record.

Section 11. Federal Approval and Federal Financial Participation. The department's coverage of services pursuant to this administrative regulation shall be contingent upon:

(1) Receipt of federal financial participation for the coverage; and

(2) Centers for Medicare and Medicaid Services' approval for the coverage.

Section 12. Appeals. (1) An appeal of an adverse action by the department regarding a service and a recipient who is not enrolled with a managed care organization shall be in accordance with 907 KAR 1:563.

(2) An appeal of an adverse action by a managed care organization regarding a service and an enrollee shall be in accordance with 907 KAR 17:010.

LAWRENCE KISSNER, Commissioner
AUDREY TAYSE HAYNES, Secretary

APPROVED BY AGENCY: December 10, 2014

FILED WITH LRC: December 11, 2014 at 3 p.m.

CONTACT PERSON: Tricia Orme, tricia.orme@ky.gov, Office of Legal Services, 275 East Main Street 5 W-B, Frankfort, Kentucky 40601, phone (502) 564-7905, fax (502) 564-7573.

REGULATORY IMPACT ANALYSIS AND TIERING STATEMENT

Contact person: Stuart Owen

(1) Provide a brief summary of:

(a) What this administrative regulation does: This new administrative regulation establishes the coverage provisions and requirements regarding Medicaid Program behavioral health services provided by residential crisis stabilization units (RCSUs). This administrative regulation is being promulgated in conjunction with 907 KAR 15:075E (Reimbursement provisions and requirements regarding behavioral health services provided by residential crisis stabilization units). To qualify as a provider, a residential crisis stabilization unit must be licensed in accordance with 902 KAR 20:440. RCSUs are authorized to provide, to Medicaid recipients, behavioral health services related to a mental health disorder, substance use disorder, or co-occurring disorders.

The array of services within the scope of residential crisis stabilization unit services includes a screening; an assessment; residential crisis stabilization services; individual outpatient therapy; group outpatient therapy; psychiatric services; treatment planning; peer support (optional); and family outpatient therapy (optional).

(b) The necessity of this administrative regulation: This administrative regulation is necessary - to comply with federal mandates. Section 1302(b)(1)(E) of the Affordable Care Act mandates that "essential health benefits" for Medicaid programs include "mental health and substance use disorder services, including behavioral health treatment" for all recipients. 42 U.S.C. 1396a(a)(23), is known as the freedom of choice of provider mandate. This federal law requires the Medicaid Program to "provide that (A) any individual eligible for medical assistance (including drugs) may obtain such assistance from any institution, agency, community pharmacy or person, qualified to perform the service or services required (including an organization which provides such services, or arranges for their availability, on a prepayment basis), who undertakes to provide him such services." 42 U.S.C. 1396a(a)(10)(B) requires the Medicaid Program to ensure that services are available to Medicaid recipients in the same amount, duration, and scope. Expanding the provider base (to include residential crisis stabilization units) will help ensure Medicaid recipient access to services statewide and reduce or prevent the lack of availability of services due to demand exceeding supply in any given area.

(c) How this administrative regulation conforms to the content of the authorizing statutes: This administrative regulation conforms to the content of the authorizing statutes by complying with federal mandates and enhancing and ensuring Medicaid recipients' access to behavioral health services.

(d) How this administrative regulation currently assists or will assist in the effective administration of the statutes: This administrative regulation will assist in the effective administration of the authorizing statutes by complying with federal mandates and enhancing and ensuring Medicaid recipients' access to behavioral health services.

(2) If this is an amendment to an existing administrative regulation, provide a brief summary of:

(a) How the amendment will change this existing administrative regulation: The amendment after comments clarifies that the sixteen (16) bed limit for RCSUs does not apply if all recipients are under the age of twenty-one (21) years or over the age of sixty-five (65) years; adds certified alcohol and drug counselors (CADCs) to the practitioners who can provider individual outpatient therapy, family outpatient therapy, group outpatient therapy, assessments, and screenings; removes the provisions regarding detoxification services; and adds CADCs to practitioners who can supervise peer support specialists.

(b) The necessity of the amendment to this administrative regulation: The amendment after comments is necessary for clarity, for accuracy, and to appropriately expand the authorized practitioners to enhance recipient access to services.

(c) How the amendment conforms to the content of the authorizing statutes: The amendment after comments conforms to the content of the authorizing statutes by clarifying provisions, removing an inaccurate provision, and by appropriately expanding the authorized practitioners to enhance recipient access to services.

(d) How the amendment will assist in the effective administration of the statutes: The amendment after comments will assist in the effective administration of the authorizing statutes by clarifying provisions, by removing an inaccurate provision, and by appropriately expanding the authorized practitioners to enhance recipient access to services.

(3) List the type and number of individuals, businesses, organizations, or state and local government affected by this administrative regulation: Any entity that obtains a license as a residential crisis stabilization unit will be affected by this administrative regulation. Additionally, the following behavioral health professionals who are authorized to provide services in a residential crisis stabilization unit will be affected: licensed psychologists, advanced practice registered nurses, licensed professional clinical counselors, licensed clinical social workers, licensed marriage and family therapists, licensed psychological practitioners, licensed psychological associates, certified social workers, licensed professional counselor associates, marriage and family therapy associates, licensed behavior analysts, licensed assistant behavior analysts, licensed professional art therapists, licensed professional art therapist associates, peer support specialists, and community support associates. Certified alcohol and drug counselors will be affected by the amendment after comments as it authorizes them to provide individual outpatient therapy, family outpatient therapy, group outpatient therapy, screenings and assessments and also authorizes them to supervise peer support specialists. Medicaid recipients who qualify for behavioral health services provided by an RCSU will also be affected by this administrative regulation.

(4) Provide an analysis of how the entities identified in question (3) will be impacted by either the implementation of this administrative regulation, if new, or by the change, if it is an amendment, including:

(a) List the actions that each of the regulated entities identified in question (3) will have to take to comply with this administrative regulation or amendment. Entities that qualify as residential crisis stabilization units and who wish to provide services to Medicaid recipients will need to enroll with the Medicaid Program as prescribed in the Medicaid provider enrollment regulation (complete and application and submit it to DMS) and sign agreements with managed care organizations if the individual wishes to provide services to Medicaid recipients who are enrolled with a managed care organization.

(b) In complying with this administrative regulation or amendment, how much will it cost each of the entities identified in question (3). The entities referenced in paragraph (a) could experience administrative costs associated with enrolling with the Medicaid Program.

(c) As a result of compliance, what benefits will accrue to the entities identified in question (3). The entities referenced in paragraph (a) will benefit by receiving Medicaid Program reimbursement. Behavioral health professionals authorized to provide services in a residential crisis stabilization unit will benefit by having more employment opportunities in Kentucky. Medicaid recipients in need of behavioral health services will benefit from an expanded base of providers from which to receive these services.

(5) Provide an estimate of how much it will cost to implement this administrative regulation:

(a) Initially: DMS is unable to accurately estimate the costs of expanding the behavioral health provider base due to the variables involved as DMS cannot estimate the utilization of these services in RCSUs compared to utilization in the other authorized provider setting - community mental health centers. However, an actuary with whom DMS contracted has estimated an average per recipient per month increase (to DMS) of twenty-seven (27) dollars associated with DMS's expansion of behavioral health services (including substance use disorder services) as well as behavioral health providers this year.

(b) On a continuing basis: The response in paragraph (a) also applies here.

(6) What is the source of the funding to be used for the implementation and enforcement of this administrative regulation: The sources of revenue to be used for implementation and enforcement of this administrative regulation are federal funds authorized under the Social Security Act, Title XIX and matching funds of general fund appropriations.

(7) Provide an assessment of whether an increase in fees or funding will be necessary to implement this administrative regulation, if new, or by the change if it is an amendment. Neither an increase in fees nor funding is necessary to implement this administrative regulation.

(8) State whether or not this administrative regulation establishes any fees or directly or indirectly increases any fees: This administrative regulation neither establishes nor increases any fees.

(9) Tiering: Is tiering applied? Tiering is not applied as the

policies apply equally to the regulated entities.

FEDERAL MANDATE ANALYSIS COMPARISON

1. Federal statute or regulation constituting the federal mandate. Section 1302(b)(1)(E) of the Affordable Care Act, 42 U.S.C. 1396a(a)(10)(B), and 42 U.S.C. 1396a(a)(23).

2. State compliance standards. KRS 205.520(3) states: "Further, it is the policy of the Commonwealth to take advantage of all federal funds that may be available for medical assistance. To qualify for federal funds the secretary for health and family services may by regulation comply with any requirement that may be imposed or opportunity that may be presented by federal law. Nothing in KRS 205.510 to 205.630 is intended to limit the secretary's power in this respect."

3. Minimum or uniform standards contained in the federal mandate. Substance use disorder services are federally mandated for Medicaid programs. Section 1302(b)(1)(E) of the Affordable Care Act mandates that "essential health benefits" for Medicaid programs include "mental health and substance use disorder services, including behavioral health treatment." 42 U.S.C. 1396a(a)(23), is known as the freedom of choice of provider mandate. This federal law requires the Medicaid Program to "provide that (A) any individual eligible for medical assistance (including drugs) may obtain such assistance from any institution, agency, community pharmacy or person, qualified to perform the service or services required (including an organization which provides such services, or arranges for their availability, on a prepayment basis), who undertakes to provide him such services." Medicaid recipients enrolled with a managed care organization may be restricted to providers within the managed care organization's provider network. The Centers for Medicare and Medicaid Services (CMS) – the federal agency which oversees and provides the federal funding for Kentucky's Medicaid Program – has expressed to the Department for Medicaid Services (DMS) the need for DMS to expand its substance use disorder provider base to comport with the freedom of choice of provider requirement. 42 U.S.C. 1396a(a)(10)(B) requires the Medicaid Program to ensure that services are available to Medicaid recipients in the same amount, duration, and scope as available to other individuals (non-Medicaid.) Expanding the provider base will help ensure Medicaid recipient access to services statewide and reduce or prevent the lack of availability of services due to demand exceeding supply in any given area.

4. Will this administrative regulation impose stricter requirements, or additional or different responsibilities or requirements, than those required by the federal mandate? The administrative regulation does not impose stricter than federal requirements.

5. Justification for the imposition of the stricter standard, or additional or different responsibilities or requirements. The administrative regulation does not impose stricter than federal requirements.

FISCAL NOTE ON STATE OR LOCAL GOVERNMENT

1. What units, parts or divisions of state or local government (including cities, counties, fire departments, or school districts) will be impacted by this administrative regulation? The Department for Medicaid Services will be affected by the amendment to this administrative regulation.

2. Identify each state or federal statute or federal regulation that requires or authorizes the action taken by the administrative regulation. KRS 194A.030(2), 194A.050(1), 205.520(3).

3. Estimate the effect of this administrative regulation on the expenditures and revenues of a state or local government agency (including cities, counties, fire departments, or school districts) for the first full year the administrative regulation is to be in effect.

(a) How much revenue will this administrative regulation generate for the state or local government (including cities, counties, fire departments, or school districts) for the first year? The amendment is not expected to generate revenue for state or local government.

(b) How much revenue will this administrative regulation generate for the state or local government (including cities, counties, fire departments, or school districts) for subsequent years? The amendment is not expected to generate revenue for state or local government.

(c) How much will it cost to administer this program for the first year? DMS is unable to accurately estimate the costs of expanding the behavioral health provider base due to the variables involved as DMS cannot estimate the utilization of these services in RCSUs compared to utilization in other authorized provider settings (independent behavioral health providers, community mental health centers, federally-qualified health centers, rural health clinics, and primary care centers. However, an actuary with whom DMS contracted has estimated an average per recipient per month increase (to DMS) of twenty-seven (27) dollars associated with DMS's expansion of behavioral health services (including substance use disorder services) as well as behavioral health providers this year.

(d) How much will it cost to administer this program for subsequent years? The response to question (c) also applies here.

Note: If specific dollar estimates cannot be determined, provide a brief narrative to explain the fiscal impact of the administrative regulation.

Revenues (+/-):

Expenditures (+/-):

Other Explanation:

PROPOSED AMENDMENTS

EDUCATION PROFESSIONAL STANDARDS BOARD
(Amendment)

16 KAR 6:010. Examination prerequisites for teacher certification.

RELATES TO: KRS 161.020, 161.028(1), 161.030(3), (4)

STATUTORY AUTHORITY: KRS 161.028(1)(a), 161.030(3), (4)

NECESSITY, FUNCTION, AND CONFORMITY: KRS 161.028(1)(a) authorizes the Education Professional Standards Board to establish standards and requirements for obtaining and maintaining a teaching certificate. KRS 161.030(3) and (4) requires the Education Professional Standards Board to select the appropriate assessments required prior to teacher certification. This administrative regulation establishes the examination prerequisites for teacher certification.

Section 1. A teacher applicant for certification shall successfully complete the applicable tests identified in this administrative regulation prior to Kentucky teacher certification.

Section 2. The Education Professional Standards Board shall require the test or tests and passing scores identified in this section for each new teacher applicant and each teacher seeking an additional certificate. (1) An applicant for Interdisciplinary Early Childhood Education certification (birth to primary) shall take one (1) of the following tests and achieve the corresponding passing score or higher:

(a) "Interdisciplinary Early Childhood Education (0023)" - 166; or

(b) "Interdisciplinary Early Childhood Education (5023)" - 166.

(2) An applicant for Elementary certification (grades P-5) shall take "Elementary Education: Multi-Subjects Test (5031)" with the following passing scores on the corresponding test sections:

(a) Until August 31, 2015:

1. "Reading and Language Arts (5032)" - 165;

2.[~~(b)~~] "Mathematics (5033)" - 164;

3.[~~(c)~~] "Social Studies (5034)" - 155; and

4.[~~(d)~~] "Science (5035)" – 159; and

(b) Beginning September 1, 2015:

1. "Elementary Education: Reading and Language Arts (5002)" - 157;

2. "Elementary Education: Mathematics (5003)" - 157;

3. "Elementary Education: Social Studies (5004)" - 155; and

4. "Elementary Education: Science (5005)" - 159.

(3) An applicant for certification at the middle school level (grades 5 through 9) shall take the content test or tests based on the applicant's content area or areas with the corresponding passing scores as identified in this subsection:

(a) Middle School English and Communications:[~~1. Until August 31, 2014:~~

~~a. "Middle School English Language Arts (0049)" - 158; or~~

~~b. "Middle School English Language Arts (5049)" - 158; or~~

~~2. Beginning September 1, 2014,~~] "Middle School English Language Arts (5047)" - 164;

(b) Middle School Mathematics:[~~1. Until August 31, 2014, "Middle School Mathematics (0069)" - 148; or~~

~~2. Beginning September 1, 2014,~~] "Middle School Mathematics (5169)" - 165;

(c) Middle School Science:

1. Until August 31, 2015, "Middle School Science (0439)" - 144; or

2. Beginning September 1, 2015, "Middle School Science (5440)" - 150; or

(d) Middle School Social Studies:

1. "Middle School Social Studies (0089)" - 149; or

2. "Middle School Social Studies (5089)": - 149.

(4) An applicant for certification at the secondary level (grades 8 through 12) shall take the content test or tests corresponding to the applicant's content area or areas with the passing scores identified in this subsection:

(a) Biology:

1. "Biology: Content Knowledge (0235)" - 146; or

2. "Biology: Content Knowledge (5235)" - 146;

(b) Chemistry:

1. "Chemistry: Content Knowledge (0245)" - 147; or

2. "Chemistry: Content Knowledge (5245)" - 147;

(c) Earth Science:

1. "Earth and Space Sciences: Content Knowledge (0571)" - 147; or

2. "Earth and Space Sciences: Content Knowledge (5571)" - 147;

(d) English:[~~1. Until August 31, 2014:~~

~~a. "English Language, Literature and Composition: Content and Analysis (0044)" - 166; or~~

~~b. "English Language, Literature and Composition: Content and Analysis (5044)" - 166; or~~

~~2. Beginning September 1, 2014,~~] "English Language Arts: Content and Analysis (5039)" - 168;

(e) Mathematics:[~~1. Until August 31, 2014:~~

~~a.(i) "Mathematics: Content Knowledge (0061)" - 125; or~~

~~(ii) "Mathematics: Content Knowledge (5061)" - 125; and~~

~~b. "Mathematics: Proofs, Models and Problems, Part 1 (0063)" - 141; or~~

~~2. Beginning September 1, 2014,~~] "Mathematics: Content Knowledge (5161)" - 160;

(f) 1. Physics: "Physics: Content Knowledge (0265)" - 133; or

2. "Physics: Content Knowledge (5265)" - 133; or

(g) Social Studies:

1. "Social Studies: Content and Interpretation (0086)" - 153; or

2. "Social Studies: Content and Interpretation (5086)" - 153.

(5) An applicant for certification in all grades shall take the content test or tests corresponding to the applicant's area or areas of specialization identified in this subsection, and, if a passing score is established in this subsection, the applicant shall achieve the passing score or higher:

(a) Art:

1. "Art: Content and Analysis (0135)" - 161; or

2. "Art: Content and Analysis (5135)" - 161;

(b) Chinese: "Chinese (Mandarin): World Language (5665)" - 164;

(c) French: "French: World Language (5174)" - 162;

(d) German: "German: World Language (5183)" - 163;

(e) Health: "Health Education (5551)" – 155;[~~(0550)" - 630;~~]

(f) Health and Physical Education:

1.a. Until August 31, 2015:

(i) "Health and Physical Education: Content Knowledge (0856)" - 156; or

(ii) "Health and Physical Education: Content Knowledge (5856)" – 156; or

b. Beginning September 1, 2015, "Health and Physical Education: Content Knowledge (5857)" – 160; and

2.a."Physical Education: Content and Design (0095)" – 169; or

b. "Physical Education: Content and Design (5095)" – 169;[~~Movement Forms - Analysis and Design (0092)" - 151;~~]

(g) Integrated Music:

1. "Music: Content and Analysis (0114)" - 162; or

2. "Music: Content and Instruction (5114)" - 162;

(h) Instrumental Music:

1. "Music: Content and Analysis (0114)" - 162; or

2. "Music: Content and Analysis (5114)" – 162;

(i) Vocal Music:

1. "Music: Content and Analysis (0114)" – 162; or

2. "Music: Content and Analysis (5114)" – 162;

(j) Latin:

1. "Latin (0601)" - 166; or

2. "Latin (5601)" – 166;

(k) Physical Education:

1. "Physical Education: Content and Design (0095)" - 169; or

2. "Physical Education: Content and Design (5095)" - 169;

(l) School Media Librarian:

1. "Library Media Specialist (0311)" - 156; or
2. "Library Media Specialist (5311)" - 156;
(m) School Psychologist:
1. Until September 1, 2015, "School Psychologist (0401)" - 161; or
2. Beginning August 1, 2015, "School Psychologist (5402)" – 147; or
(n) Spanish: "Spanish: World Language (5195)" - 168.
(6) Except as provided in subsection (7) of this section, an applicant for certification for teacher of exceptional children in Communication Disorders, Learning and Behavior Disorders, Hearing Impaired, Hearing Impaired with Sign Proficiency, Visually Impaired, or Moderate and Severe Disabilities shall take the content test or tests based on the applicant's area or areas of specialization with the corresponding passing scores as identified in this subsection:
(a) Communication Disorders:
1.a. "Special Education: Core Content Knowledge and Applications (0354)" - 151; or
b. "Special Education: Core Content Knowledge and Applications (5354)" - 151; and
2.a. "Speech-Language Pathology (0330)" - 600; or
b.(i) Until August 1, 2015, "Speech-Language Pathology (5330)" - 600; or
(ii) Beginning September 1, 2015, "Speech-Language Pathology (5331)" – 162;
(b) Hearing Impaired:
1.a. "Special Education: Core Knowledge and Applications (0354)" - 151; or
b. "Special Education: Core Knowledge and Applications (5354)" - 151; and
2.a. "Special Education: Education of Deaf and Hard of Hearing Students (0272)" - 160; or
b. "Special Education: Education of Deaf and Hard of Hearing Students (5272)" – 160;
(c) Hearing Impaired With Sign Proficiency:
1.a. "Special Education: Core Knowledge and Applications (0354)" - 151; or
b. "Special Education: Core Knowledge and Applications (5354)" – 151;
2.a. "Special Education: Education of Deaf and Hard of Hearing Students (0272)" - 160; or
b. "Special Education: Education of Deaf and Hard of Hearing Students (5272)" -160; and
3. One (1) of the following tests with a passing score of Intermediate Level:
a. "Sign Communication Proficiency Interview (SCPI)"; or
b. "Educational Sign Skills Evaluation (ESSE)";
(d) Learning and Behavior Disorders:
1. "Special Education: Core Knowledge and Mild to Moderate Applications (0543)" - 158; or
2. "Special Education: Core Knowledge and Mild to Moderate Applications (5543)" - 158;
(e) Moderate and Severe Disabilities:
1. "Special Education: Core Knowledge and Severe to Profound Applications (0545)" - 158; or
2. "Special Education: Core Knowledge and Severe to Profound Applications (5545)" - 158; or
(f) Visually Impaired:
1.a. "Special Education: Core Knowledge and Applications (0354)" - 151; or
b. "Special Education: Core Knowledge and Applications (5354)" - 151; and
2.a. "Special Education: Teaching Students with Visual Impairments (0282)" – 163; or
b. "Special Education: Teaching Students with Visual Impairments (5282)" – 163.
(7) A holder of an exceptional child certificate in Learning and Behavior Disorders or Moderate and Severe Disabilities who is seeking additional certification for any exceptional children teaching certificate listed in subsection (6) of this section shall not be required to take:
(a)[~~"Education of Exceptional Students: Core Content Knowledge (0353);"~~
~~(b)~~] "Special Education: Core Knowledge and Applications (0354);" or
(b)[~~(c)~~] "Special Education: Core Knowledge and Applications (5354)".
(8)(a) Except as provided in paragraph (b) of this subsection, an applicant for Career and Technical Education certification to teach in grades 5 - 12 shall take the content test or tests corresponding to the applicant's area or areas of specialization identified in this paragraph, and, if a passing score is established in this paragraph, the applicant shall achieve the passing score or higher:
1. Agriculture:
a. Until August 31, 2015, "Agriculture (0700)" - 520; or
b. Beginning September 1, 2015, "Agriculture (5701)" – 147;
2. Business and Marketing Education:
a. "Business Education (0101)" - 154; or
b. "Business Education (5101)" - 154;
3. Family and Consumer Science:
a. Until August 1, 2015:
(i) "Family and Consumer Sciences (0121)" - 162; or
(ii)[~~b.~~] "Family and Consumer Sciences (5121)" - 162; or
b. Beginning September 1, 2015, "Family and Consumer Sciences (5122)" – 153; or
4. Engineering and Technology Education:
a. "Technology Education (0051)" – 159; or
b. "Technology Education (5051)" -159.
(b) An applicant for Industrial Education shall take the content test or tests corresponding to the applicant's area or areas of specialization with the passing scores identified in 16 KAR 6:020.
(9) An applicant for a restricted base certificate in the following area or areas shall take the content test or tests based on the applicant's area or areas of specialization with the corresponding passing scores as identified in this subsection:
(a) English as a Second Language:
1. "English to Speakers of Other Languages (0361)" - 157; or
2. "English to Speakers of Other Languages (5361)" - 157;
(b) Speech/Media Communications:
1. "Speech Communication (0221)" - 146; or
2. "Speech Communication (5221)" – 146; or
(c) Theater:
1. "Theatre (0641)" – 162; or
2. "Theatre (5641)" - 162.
(10) An applicant for an endorsement in the following content area or areas shall take the content test or tests based on the applicant's area or areas of specialization with the passing scores identified in this subsection:
(a) American Sign Language: "American Sign Language Proficiency Interview (ASLPI)" administered by the Gallaudet University - 3+;
(b) English as a Second Language:
1. "English to Speakers of Other Languages (0361)" - 157; or
2. "English to Speakers of Other Languages (5361)" – 157;
(c) Learning and Behavior Disorders, grades 8 - 12:
1. "Special Education: Core Knowledge and Mild to Moderate Applications (0543)" - 158; or
2. "Special Education: Core Knowledge and Mild to Moderate Applications (5543)" - 158;
(d) Literacy Specialist:
1. "Reading Specialist (0301)" - 164; or
2. "Reading Specialist (5301)" - 164;
(e) Gifted Education, grades primary - 12:
1. Until August 31, 2015, "Gifted Education (0357)" - 152; or
2. Beginning September 1, 2015, "Gifted Education (5358)" – 157; or
(f) Reading Primary through Grade 12:
1. "Teaching Reading (0204)" - 153; or
2. "Teaching Reading (5204)" - 153.

Section 3. In addition to the content area test or tests established in Section 2 of this administrative regulation, each new teacher shall take the pedagogy test and meet the passing score identified in this section that corresponds to the grade level of

certification sought. If a certified teacher is seeking additional certification in any area, the applicant shall not be required to take an additional pedagogy test.

(1) An applicant for Elementary certification (grades primary – 5) shall take one (1) of the following tests and achieve the corresponding passing score or higher:

(a) "Principles of Learning and Teaching: Grades kindergarten - 6 (0622)" - 160; or

(b) "Principles of Learning and Teaching: Grades kindergarten - 6 (5622)" - 160.

(2) An applicant for certification at the middle school level (grades 5 through 9) shall take one (1) of the following tests and achieve the corresponding passing score or higher:

(a) "Principles of Learning and Teaching: Grades 5 - 9 (0623)" - 160; or

(b) "Principles of Learning and Teaching: Grades 5 - 9 (5623)" - 160.

(3) An applicant for certification at the secondary level (grades 8 through 12) shall take one (1) of the following tests and achieve the corresponding passing score or higher:

(a) "Principles of Learning and Teaching: Grades 7 - 12 (0624)" - 160; or

(b) "Principles of Learning and Teaching: Grades 7 - 12 (5624)" - 160.

(4) An applicant for certification in all grades with a content area identified in Section 2(5) of this administrative regulation shall take one (1) of the following tests and achieve the corresponding passing score or higher:

(a) "Principles of Learning and Teaching: Grades kindergarten - 6 (0622)" - 160;

(b) "Principles of Learning and Teaching: Grades kindergarten - 6 (5622)" - 160;

(c) "Principles of Learning and Teaching: Grades 5 - 9 (0623)" - 160;

(d) "Principles of Learning and Teaching: Grades 5 - 9 (5623)" - 160;

(e) "Principles of Learning and Teaching: Grades 7 - 12 (0624)" - 160; or

(f) "Principles of Learning and Teaching: Grades 7 - 12 (5624)" - 160.

(5) An applicant applying only for certification for teacher of exceptional children shall not be required to take a separate pedagogy test established in this section. The content area test or tests established in Section 2 of this administrative regulation shall fulfill the pedagogy test requirement for a teacher of exceptional children.

(6) An applicant for Career and Technical Education certification in grades 5 through 12 shall take one (1) of the following tests and receive the identified passing score:

(a) "Principles of Learning and Teaching: Grades kindergarten - 6 (0622)" - 160;

(b) "Principles of Learning and Teaching: Grades kindergarten - 6 (5622)" - 160;

(c) "Principles of Learning and Teaching: Grades 5 - 9 (0623)" - 160;

(d) "Principles of Learning and Teaching: Grades 5 - 9 (5623)" - 160;

(e) "Principles of Learning and Teaching: Grades 7 - 12 (0624)" - 160; or

(f) "Principles of Learning and Teaching: Grades 7 - 12 (5624)" - 160.

Section 4. Assessment Recency. (1) A passing score on a test established at the time of administration shall be valid for the purpose of applying for certification for five (5) years from the test administration date.

(2) A teacher who fails to complete application for certification to the Education Professional Standards Board within the applicable recency period of the test and with the passing score established at the time of administration shall retake the applicable test or tests and achieve the passing score or scores required for certification at the time of application.

(3) The test administration date shall be established by the Educational Testing Service or other authorized test administrator.

Section 5. (1) An applicant for initial certification shall take the assessments on a date established by:

(a) The Educational Testing Service; or

(b) The agency established by the Education Professional Standards Board as the authorized test administrator.

(2) An applicant shall authorize test results to be forwarded by the Educational Testing Service, or other authorized test administrator, to the Kentucky Education Professional Standards Board and to the teacher preparation institution where the applicant received the relevant training.

(3)(a) Public announcement of testing dates and locations shall be issued sufficiently in advance of testing dates to permit advance registration.

(b) An applicant shall seek information regarding the dates and location of the tests and make application for the appropriate examination prior to the deadline established and sufficiently in advance of anticipated employment to permit test results to be received by the Education Professional Standards Board and processed in the normal certification cycle.

Section 6. An applicant shall pay the examination fee established by the Educational Testing Service or other authorized test administrator for each relevant test required to be taken.

Section 7. An applicant who fails to achieve at least the minimum score on any of the applicable examinations may retake the test or tests during one (1) of the scheduled test administrations.

Section 8. The Education Professional Standards Board shall collect data and conduct analyses of the scores and institutional reports provided by the Educational Testing Service or other authorized test administrator to determine the impact of these tests.

CASSANDRA WEBB, Chairperson

APPROVED BY AGENCY: December 8, 2014

FILED WITH LRC: December 12, 2014 at 4 p.m.

PUBLIC HEARING AND PUBLIC COMMENT PERIOD: A public hearing on this administrative regulation shall be held on January 30, 2015 at 9:00 a.m. at the offices of the Education Professional Standards Board, 100 Airport Road, 3rd Floor, Conference Room A, Frankfort, Kentucky 40601. Individuals interested in being heard at this hearing shall notify this agency in writing five workdays prior to the hearing, of their intent to attend. If no notification of intent to attend the hearing is received by that date, the hearing may be canceled. This hearing is open to the public. Any person who wishes to be heard will be given an opportunity to comment on the proposed administrative regulation. A transcript of the public hearing will not be made unless a written request for a transcript is made. If you do not wish to be heard at the public hearing, you may submit written comments on the proposed administrative regulation. Written comments shall be accepted until close of business on February 2, 2015. Send written notification of intent to be heard at the public hearing or written comments on the proposed administrative regulation to the contact person.

CONTACT PERSON: Alicia A. Sneed, Director of Legal Services, Education Professional Standards Board, 100 Airport Road, Third Floor, Frankfort, Kentucky 40601, phone (502) 564-4606, fax (502) 564-7080.

REGULATORY IMPACT ANALYSIS AND TIERING STATEMENT

Contact Person: Alicia A. Sneed

(1) Provide a brief summary of:

(a) What this administrative regulation does: This administrative regulation establishes the written examination prerequisites and the corresponding passing scores for teacher certification.

(b) The necessity of this administrative regulation: This

administrative regulation is necessary to provide notice to teacher candidates of the assessment requirements for obtaining and maintaining a teaching certificate.

(c) How this administrative regulation conforms to the content of the authorizing statutes: KRS 161.020 requires a certificate of legal qualifications for any public school position for which a certificate is issued. KRS 161.028 requires the Education Professional Standards Board to establish standards and requirements for obtaining and maintaining a teaching certificate. KRS 161.030 places the responsibility of selecting the assessments and determining the minimum acceptable level of achievement on each assessment on the Education Professional Standards Board.

(d) How this administrative regulation currently assists or will assist in the effective administration of the statutes: This administrative regulation lists the required teacher certification assessments and their corresponding minimum acceptable scores.

(2) If this is an amendment to an existing administrative regulation, provide a brief summary of:

(a) How the amendment will change this existing administrative regulation: This amendment replaces several discontinued tests with their regenerated counterparts. The newly regenerated tests include "Elementary Education: Reading and Language Arts (5002)", "Elementary Education: Mathematics (5003)," "Elementary Education: Social Studies (5004)," "Elementary Education: Science (5005)," "Health and Physical Education: Content Knowledge (5857)," "Family and Consumer Sciences (5112)," "School Psychologist (5402)," "Middle School Science (5440);" "Gifted Education (5358)," "Agriculture (5701)," and "Speech Language Pathology (5331)." Applicants for certification will need to take these tests instead of the discontinued tests after September 1, 2015. Any other changes are to clarify the regulation in accordance with KRS Chapter 13A.

(b) The necessity of the amendment to this administrative regulation: This amendment is necessary to ensure that the required assessments and corresponding scores are adequately set to produce the most competent educators.

(c) How the amendment conforms to the content of the authorizing statutes: The authorizing statues, KRS 161.020, 161.028, and 161.030, govern the certification of professional school personnel and grant the Education Professional Standards Board certification authority and the responsibility for establishing the requirements for obtaining and maintaining a certificate. This amendment establishes the required assessments and corresponding passing scores for Kentucky teacher certification.

(d) How the amendment will assist in the effective administration of the statutes: This amendment more closely aligns assessment options with teacher preparation program requirements and opportunities within an actual school setting.

(3) List the type and number of individuals, businesses, organizations, or state and local governments affected by this administrative regulation: 173 Kentucky school districts, thirty (30) educator preparation programs, and educators seeking new and additional teacher certification.

(4) Provide an analysis of how the entities identified in question (3) will be impacted by either the implementation of this administrative regulation, if new, or by the change, if it is an amendment, including:

(a) List the actions that each of the regulated entities identified in question (3) will have to take to comply with this administrative regulation or amendment: The school districts will not be required to take any additional action. The educator preparation programs will need to continue to direct students to the Education Professional Standards Board website for current assessment requirements. Applicants will need to continue to refer to the Education Professional Standards board website for current assessment requirements.

(b) In complying with this administrative regulation or amendment, how much will it cost each of the entities identified in question (3): There should not be any additional cost to the entities impacted by the regulation.

(c) As a result of compliance, what benefits will accrue to the entities identified in question (3): The educator preparation programs and applicants will be positively affected by the clarifications to the regulation. The districts will be positively affected by a supply of teachers who are competent in their content area.

(5) Provide an estimate of how much it will cost the administrative body to implement this administrative regulation:

(a) Initially: None

(b) On a continuing basis: None

(6) What is the source of the funding to be used for the implementation and enforcement of this administrative regulation: State General Fund

(7) Provide an assessment of whether an increase in fees or funding will be necessary to implement this administrative regulation, if new, or by the change if it is an amendment: No increase in fees or funding will be necessary to implement this administrative regulation.

(8) State whether or not this administrative regulation established any fees or directly or indirectly increased any fees: This administrative regulation does not establish any fees, or directly or indirectly increase fees.

(9) TIERING: Is tiering applied? No, tiering does not apply since all candidates for each certificate will be held to the same standard.

FISCAL NOTE ON STATE OR LOCAL GOVERNMENT

(1) What units, parts, or divisions of state or local government (including cities, counties, fire departments, or school districts) will be impacted by this administrative regulation? The Education Professional Standards Board, 173 school districts, eight (8) public universities with educator preparation programs.

(2) Identify each state or federal statute or federal regulation that requires or authorizes the action taken by the administrative regulation. KRS 161.028, KRS 161.030

(3) Estimate the effect of this administrative regulation on the expenditures and revenues of a state or local government agency (including cities, counties, fire departments, or school districts) for the first full year the administrative regulation is to be in effect. There should be no effect on expenditures or revenues.

(a) How much revenue will this administrative regulation generate for the state or local government (including cities, counties, fire departments, or school districts) for the first year? This is not a revenue generating regulation.

(b) How much revenue will this administrative regulation generate for the state or local government (including cities, counties, fire departments, or school districts) for subsequent years? This is not a revenue generating regulation.

(c) How much will it cost to administer this program for the first year? There may be a minimal cost to the Education Professional Standards Board to update its website and ensure that applicants have notice to take the newly adopted tests.

(d) How much will it cost to administer this program for subsequent years? No additional costs.

Note: If specific dollar estimates cannot be determined, provide a brief narrative to explain the fiscal impact of the administrative regulation.

Revenues (+/-): None

Expenditures (+/-): None

Other Explanation: This regulatory amendment establishes the qualifying tests for certification applicants. It does not have any fiscal impact.

FINANCE AND ADMINISTRATION CABINET
Office of the Secretary
(Amendment)

200 KAR 40:010. Motor pool procedure.

RELATES TO: KRS 42.0171(2), 44.045[~~1984 Ky. Acts ch. 344 sec. 1, ch. 406 sec. 6~~]

STATUTORY AUTHORITY: KRS 44.045(6)[~~174.080~~]

NECESSITY, FUNCTION, AND CONFORMITY: KRS 44.045(6) authorizes the secretary of the Finance and

Administration Cabinet to promulgate an administrative regulation governing the use of state-owned vehicles[~~To implement the authority for administration of the state motor pool authorized by Executive Order 83-70 confirmed by the 1984 Ky. Acts ch. 406, Section 6 and Executive Order 82-798 confirmed by the 1984 Ky. Acts ch. 344, Section 1. These Executive Orders provide that the administration of the state motor pool is the responsibility of the Transportation Cabinet~~]. This administrative regulation establishes[~~sets forth~~] the procedures by which a state employee can use a motor pool vehicle and the employee's[~~his~~] resulting responsibility for the motor vehicle.

Section 1.[~~(1)~~] In order to facilitate the administration and operation of the state motor pool, the Driver's Guide for Commonwealth Vehicles and the Agency Guide for Commonwealth Vehicles shall govern["~~Transportation Services Guidance Manual", as revised through August 28, 1991 is incorporated by reference. The manual incorporated by reference contains information on~~] the use and assignment of state motor pool vehicles, the operation and care of those vehicles, and the use of fuel[~~Transportation Cabinet~~] credit cards.[~~(2) This guidance manual may be inspected, copied or purchased from the Transportation Cabinet's Division of Management Services, First Floor State Office Building, 501 High Street, Frankfort, Kentucky 40622. The telephone number of the division is (502) 564-6927. The office hours of the division are 8 a.m. to 4:30 p.m. Eastern time on weekdays.~~]

Section 2. Any employee who fails to adhere to the requirements of this administrative regulation is subject to disciplinary action pursuant to KRS 18A.095.

Section 3. Incorporation by Reference. (1) The following material is incorporated by reference:

(a) "Driver's Guide for Commonwealth Vehicles", 8/2012; and

(b) "Agency Guide for Commonwealth Vehicles", 8/2012.

(2) This material may be inspected, copied, or obtained, subject to applicable copyright law, at the Finance and Administration Cabinet, 392 Capitol Annex, Frankfort, Kentucky 40601, Monday through Friday, 8 a.m. to 4:30 p.m., and is available from the Division of Fleet Management Web site at http://finance.ky.gov/services/fleet/Pages/FleetGuidanceandRates.aspx.

LORI FLANERY, Secretary

APPROVED BY AGENCY: December 8, 2014

FILED WITH LRC: December 10, 2014 at noon

PUBLIC HEARING AND PUBLIC COMMENT PERIOD: A public hearing on this administrative regulation shall be held on January 26, 2015 from 10:00 a.m. to 12:00 p.m., in Room 381, Capitol Annex Building, Frankfort, Kentucky 40601. Individuals interested in being heard at this hearing shall notify this agency in writing at least five (5) workdays prior to the hearing, of their intent to attend. If no notification of intent to attend the hearing is received by that date, the hearing may be cancelled. This hearing is open to the public. Any person who wishes to be heard will be given an opportunity to comment on the proposed administrative regulation. A transcript of the public hearing will not be made unless a written request for a transcript is made. If you do not wish to be heard at the public hearing, you may submit written comments on the proposed administrative regulation. Written comments shall be accepted until close of business on February 2, 2015. Send written notification of intent to be heard at the public hearing or written comments on the proposed administrative regulation to the contact person.

CONTACT PERSON: Doug Hendrix, Deputy General Counsel, Finance and Administration Cabinet, 392 Capitol Annex, Frankfort, Kentucky 40601, phone (502) 564-6660, fax (502) 564-9785.

REGULATORY IMPACT ANALYSIS AND TIERING STATEMENT

Contact Person: Doug Hendrix

(1) Provide a brief summary of:

(a) What this administrative regulation does: KRS 42.0171(2) established the Division of Fleet Management ("DFM"), Office of Administrative Services ("OAS") within the Finance and Administration Cabinet ("FAC"). KRS 45.045 provides that the FAC shall purchase and maintain the state's fleet of automobiles. DFM is charged with managing and maintaining the Commonwealth's fleet of automobiles. This regulation sets forth the procedures regarding a state employee's use of and responsibilities regarding an automobile from the motor pool. While FAC maintains the fleet, this regulation states that the Transportation Cabinet maintains the fleet. This amendment will correct the regulation to reflect the authorizing statutes.

(b) The necessity of this administrative regulation: KRS 44.045(6) authorizes the Secretary of the FAC to promulgate regulations relating to management of the state's motor pool. This regulation provides these procedures.

(c) How this administrative regulation conforms to the content of the authorizing statutes: KRS 44. 045(6) authorizes the regulation. KRS 45.0171(2) provides that DFM shall oversee the motor pool.

(d) How this administrative regulation currently assists or will assist in the effective administration of the statutes: This regulation will provide guidance to DFM and employees on the proper use of automobiles from the state fleet.

(2) If this is an amendment to an existing administrative regulation, provide a brief summary of:

(a) How the amendment will change this existing administrative regulation: As promulgated, this regulation states that the Transportation Cabinet will oversee the motor pool. This amendment will correct the regulation to reflect KRS 44.045's directive that FAC will oversee the fleet.

(b) The necessity of the amendment to this administrative regulation: KRS 44.045(6) authorizes the Secretary of the FAC to promulgate regulations relating to management of the state's motor pool. This regulation provides these procedures.

(c) How the amendment conforms to the content of the authorizing statutes: KRS 44. 045(6) authorizes the regulation. KRS 45.0171(2) provides that DFM shall oversee the motor pool.

(d) How the amendment will assist in the effective administration of the statutes: This regulation will provide guidance to DFM and employees on the proper use of automobiles from the state fleet.

(3) List the type and number of individuals, businesses, organizations, or state and local governments affected by this administrative regulation: The regulation will affect every state employee who uses an automobile from the state's motor pool. It will also impact every agency that has not received an exemption from the Secretary of the FAC to operate an agency specific motor pool.

(4) Provide an analysis of how the entities identified in question (3) will be impacted by either the implementation of this administrative regulation, if new, or by the change, if it is an amendment, including:

(a) List the actions that each of the regulated entities identified in question (3) will have to take to comply with this administrative regulation or amendment: The amendment will require no additional actions by regulated entities.

(b) In complying with this administrative regulation or amendment, how much will it cost each of the entities identified in question (3): No cost to regulated entities.

(c) As a result of compliance, what benefits will accrue to the entities identified in question (3): Regulated entities and employees will benefit from clear processes on the use of automobiles from the fleet.

(5) Provide an estimate of how much it will cost the administrative body to implement this administrative regulation: No additional cost to FAC.

(a) Initially: N/A

(b) On a continuing basis: N/A

(6) What is the source of the funding to be used for the implementation and enforcement of this administrative regulation: General funds.

(7) Provide an assessment of whether an increase in fees or funding will be necessary to implement this administrative regulation, if new, or by the change if it is an amendment: No additional costs related to this regulation.

(8) State whether or not this administrative regulation established any fees or directly or indirectly increased any fees: No.

(9) TIERING: Is tiering applied? Tiering is not applied as this administrative regulation applies to all state employees and agencies which utilize automobiles from the motor pool.

FISCAL NOTE ON STATE OR LOCAL GOVERNMENT

1. What units, parts or divisions of state or local government (including cities, counties, fire departments, or school districts) will be impacted by this administrative regulation?

2. Identify each state or federal statute or federal regulation that requires or authorizes the action taken by the administrative regulation. N/A

3. Estimate the effect of this administrative regulation on the expenditures and revenues of a state or local government agency (including cities, counties, fire departments, or school districts) for the first full year the administrative regulation is to be in effect. N/A

(a) How much revenue will this administrative regulation generate for the state or local government (including cities, counties, fire departments, or school districts) for the first year? N/A

(b) How much revenue will this administrative regulation generate for the state or local government (including cities, counties, fire departments, or school districts) for subsequent years? N/A

(c) How much will it cost to administer this program for the first year? N/A – this is an ongoing program.

(d) How much will it cost to administer this program for subsequent years? No additional costs.

Note: If specific dollar estimates cannot be determined, provide a brief narrative to explain the fiscal impact of the administrative regulation.

Revenues (+/-):

Expenditures (+/-):

Other Explanation:

FINANCE AND ADMINISTRATION CABINET
Office of the Secretary
(Amendment)

200 KAR 40:020. Purchase, use, lease, maintenance, and disposal of state-owned motor vehicles.

RELATES TO: KRS 42.0171(2), 44.045[~~, 186.065~~]

STATUTORY AUTHORITY: KRS 44.045(6)

NECESSITY, FUNCTION, AND FUNCTION: KRS 44.045(6) authorizes the Secretary of the Finance and Administration[~~Transportation~~] Cabinet to promulgate administrative regulations governing the use of state-owned vehicles. This administrative regulation establishes[~~is necessary to assure the most effective utilization of state-owned vehicles and to establish~~] procedures governing the purchase, licensure, use, lease, maintenance, and disposal of state-owned vehicles.

Section 1. Definitions. (1) "Agency-specific motor pool" means the fleet of passenger carrying motor vehicles owned, operated, and maintained by a state agency other than the Finance and Administration[~~Transportation~~] Cabinet.

(2) "Cabinet" means the Finance and Administration Cabinet.

(3) "Division" means the Finance and Administration Cabinet, Division of Fleet Management.

(4) "Exempt vehicle" means a motor vehicle that is not part of the statewide motor pool.

(5)[~~(3)~~] "Motor vehicle" is[~~means as~~] defined in KRS 281.011(2).

(6)[~~(4)~~] "Nonexempt vehicle" means a motor vehicle under the control of the statewide motor pool.

(7)[~~(5)~~] "Passenger carrying vehicle" means a motor vehicle whose primary purpose is to transport people.

(8) "Secretary" means the Secretary of the Finance and Administration Cabinet.

(9)[~~(6)~~] "Statewide motor pool" means the fleet of passenger carrying motor vehicles operated, controlled, and maintained by the Finance and Administration Cabinet,[~~Transportation Cabinet's~~] Division of Fleet Management.

Section 2. General. (1) This administrative regulation shall apply[~~is applicable~~] to:

(a) An executive branch state agency in regard to the purchase, licensure, use, lease, maintenance, and disposal of a motor vehicle; and

(b) A legislative or judicial branch state agency in regard to the use, lease, and maintenance of a nonexempt motor vehicle.

(2) The[~~Transportation~~] cabinet shall establish a statewide motor pool of vehicles for the purpose of providing safe, reasonably priced, necessary, and essential vehicular transportation for a cabinet, agency, or entity of state government. This fleet shall be made available for lease by a state agency.

(3)(a) The secretary[~~of the Finance and Administration Cabinet~~] may, upon written justification from an agency head, authorize the establishment of an agency-specific motor pool.

(b) An agency-specific motor pool shall provide a similar service level at costs less than or equal to the costs the[~~Transportation~~] cabinet could provide a comparable service.

(c) An agency with authority delegated pursuant to this subsection shall submit cost effectiveness and inventory reports to the[~~Transportation~~] cabinet on an annual basis or as requested by the cabinet to demonstrate the agency-specific motor pool meets the requirements of Section 2(3)(c) of this administrative regulation.

(d) The establishment of an agency-specific motor pool shall not exempt the agency from the provisions of this administrative regulation.

(4) Except as provided in[~~for~~] Section 3(2) of this administrative regulation, a state-supported university and the Kentucky[~~Department of~~] State Police shall be exempt from the provisions of this administrative regulation.

(5) A nonpassenger carrying motor vehicle with a weight rating greater than three-fourths (3/4) ton shall be exempt from the statewide motor pool.

Section 3. Vehicle Identification. (1) The[~~Transportation~~] cabinet shall have inventory responsibility for all state-owned motor vehicles.

(2) A state agency controlling an exempt vehicle shall submit an annual inventory report to the[~~Transportation~~] cabinet.

(3) A copy of each vehicle purchase order authorized by the[~~Finance Cabinet~~] secretary pursuant to KRS 44.045(2) shall be submitted to the[~~Transportation~~] cabinet. The submittal shall include the agency responsible for reporting inventory information to the [~~Transportation~~] cabinet.

(4)[~~(a)~~] At the time of its purchase, a nonexempt motor vehicle shall be delivered to the division[~~Transportation Cabinet~~] in Frankfort, where licensing, identification, and other required markings shall be performed. The agency controlling an exempt vehicle shall pay the division the actual costs incurred for the licensing, identification, and other required markings for the vehicles[~~(b) If purchased an exempt vehicle may be delivered to a location determined by the agency head~~].

Section 4. Purchase of Motor Vehicles. (1) A price contract for the purchase of a motor vehicle shall be established by the cabinet's Office of Procurement Services[~~Finance and Administration Cabinet, Division of Purchases~~].

(2)(a) The[~~Transportation~~] cabinet shall approve the purchase of a motor vehicle, except one (1) exempted by the provisions of

Section 2(4) of this administrative regulation and an exempt vehicle deemed necessary by the secretary[~~of the Finance Cabinet~~] pursuant to KRS 44.045(2). A state agency desiring to purchase a motor vehicle shall submit a written request to the[~~Transportation~~] cabinet.

(b) The request shall include the following:

1. Name of the requesting agency;

2. Description of the requested vehicle, including type of fuel used in the vehicle;

3. Intended use of the vehicle;

4. Number of vehicles requested;

5. Estimated annual vehicle mileage;

6. Whether the vehicle is a replacement or a program expansion;

7. Source of funds for the purchase;

8. If funding for the vehicle was approved in the budget;

9. If the vehicle will be assigned to a motor pool, and if not, an explanation of its planned uses; and

10. The name, address, telephone number, and signature of the person in the agency authorized to request the purchase.

(3)[~~(a)~~] The[~~Transportation~~] cabinet shall consider for replacement a nonexempt motor vehicle that:

(a) Is seven (7)[~~1. Is five (5)~~] years old;

(b)[~~or 2.~~] Has been driven 140,000[~~90,000~~] miles;

(c) Is[~~. (b) The Transportation Cabinet may consider for replacement a nonexempt motor vehicle if it is:~~

~~1.~~] inoperable;

(d) Is[~~2.~~] unsafe; or

(e) Is[~~3.~~] in need of extensive repair that would not be economically feasible.[~~(4) The Transportation Cabinet shall submit a monthly status report to the Governor's Office of Policy and Management that summarizes the vehicle purchases authorized and the impact they have on the motor pool~~.

~~(5) An exempt agency shall submit a purchase document with a copy of vehicle purchase approval from the Transportation Cabinet to the Finance and Administration Cabinet, Division of Purchases for processing.~~

~~(6) The Transportation Cabinet shall purchase a vehicle used by the cabinet which is not ordered from a price contract, including heavy roadway equipment and other exempt vehicles.~~]

Section 5. Use of Motor Vehicles. (1)(a) A state employee shall comply with 200 KAR 40:010[~~600 KAR 1:070~~] when using a vehicle from the motor pool.

(b) It shall be the responsibility of each agency head to ascertain that state-owned motor vehicles are used only for official purposes in accordance with KRS 44.045(2) and the agency head[~~he~~] shall insure that the use of these vehicles is not abused.

(2)(a) The request for permanent assignment shall set forth the reasons why the assignment is necessary and in the best interests of the Commonwealth.

(b) If the vehicle is to be parked at a private residence, the request shall include significant justification for this action.

(3) Before a motor vehicle may be used by a state agency, it shall be marked in accordance with the provisions of KRS 44.045[~~186.065~~].

Section 6. Licensure of Motor Vehicles. (1)(a) A request to license a state-owned motor vehicle with a nonofficial license plate, pursuant to KRS 44.045(4) and 186.020, shall set forth the investigatory purposes for which the vehicle shall be used.

(b) It shall be the responsibility of the agency head to ascertain that the vehicle is used only for investigatory purposes and the agency head[~~he~~] shall insure that the use of the vehicle is not abused.

(2) An official license plate attached to a motor vehicle which is being replaced shall be turned in to the[~~Transportation~~] cabinet.

(3) The[~~Transportation~~] cabinet shall be responsible for the licensing and titling of all nonexempt vehicles.

Section 7. Lease of Motor Vehicles from Statewide Motor Pool. (1) The fleet of vehicles in the statewide motor pool shall be available for use by a state agency for official business of the Commonwealth. These vehicles shall be made available for a lease to a state agency.

(2)(a) A request to use a motor vehicle available in the statewide motor pool shall be submitted to the[~~Transportation~~] cabinet on the forms and in the manner prescribed in 200 KAR 40:010[~~600 KAR 1:070~~].

(b) Billing shall be performed by the[~~Transportation~~] cabinet and necessary documentation shall be provided to a user agency.

(c) The[~~Transportation Cabinet has adopted the procedures to govern the~~] operation of the statewide motor pool shall be governed by 200 KAR 40:010[~~in 600 KAR 1:070~~].

(3) Except for vehicles for lease under a master agreement procured by the cabinet, an agency shall not lease a motor vehicle from a private individual or business without prior written approval of the secretary[~~of the Finance and Administration Cabinet~~].

Section 8. Maintenance of Motor Vehicles. (1) It shall be the responsibility of the agency to which a motor vehicle from the statewide motor pool has been permanently assigned to maintain it properly and in accordance with the manufacturer's instructions.

(2)(a) Nonexempt motor vehicle repair and maintenance shall be the responsibility of the[~~Transportation~~] cabinet.

(b) The cabinet shall repair and maintain vehicles in the most economical means possible.

(3) A record of maintenance history and costs for an exempt motor vehicle shall be kept by the agency and submitted to the[~~Transportation~~] cabinet on an annual basis or as requested by the cabinet to demonstrate the agency-specific motor pool meets the requirements of this section.

Section 9. Disposal of Motor Vehicles. (1) An agency may advise the[~~Transportation~~] cabinet of its desire to dispose of a motor vehicle if the motor vehicle[~~which meets at least one (1) of the following criteria~~]:

(a) Is at least seven (7)[~~five (5)~~] years old;

(b) Has been driven at least 140,000[~~90,000~~] miles; or

(c) Is inoperable, unsafe, or in need of substantial repair.

(2) All proceeds from the sale of a nonexempt surplus motor vehicle shall be deposited into the[~~Transportation~~] cabinet motor pool agency fund unless precluded by:

(a) Federal law[~~or regulations~~]; or

(b) State law[~~or administrative regulations~~].

(3)(a) The disposal of an exempt motor vehicle shall be the responsibility of the individual agency.

(b) For inventory control purposes, the agency shall immediately notify the[~~Transportation~~] cabinet of the disposal of an exempt vehicle.

LORI FLANERY, Secretary

APPROVED BY AGENCY: December 8, 2014

FILED WITH LRC: December 10, 2014 at noon

PUBLIC HEARING AND PUBLIC COMMENT PERIOD: A public hearing on this administrative regulation shall be held on January 26, 2015 from 10:00 a.m. to 12:00 p.m., in Room 381, Capitol Annex Building, Frankfort, Kentucky 40601. Individuals interested in being heard at this hearing shall notify this agency in writing at least five (5) workdays prior to the hearing, of their intent to attend. If no notification of intent to attend the hearing is received by that date, the hearing may be cancelled. This hearing is open to the public. Any person who wishes to be heard will be given an opportunity to comment on the proposed administrative regulation. A transcript of the public hearing will not be made unless a written request for a transcript is made. If you do not wish to be heard at the public hearing, you may submit written comments on the proposed administrative regulation. Written comments shall be accepted until close of business on February 2, 2015. Send written notification of intent to be heard at the public hearing or written comments on the proposed administrative regulation to the contact person.

CONTACT PERSON: Doug Hendrix, Deputy General Counsel, Finance and Administration Cabinet, 392 Capitol Annex, Frankfort, Kentucky 40601, phone (502) 564-6660, fax (502) 564-9875.

REGULATORY IMPACT ANALYSIS AND TIERING STATEMENT

Contact Person: Doug Hendrix

(1) Provide a brief summary of:

(a) What this administrative regulation does: KRS 42.0171(2) established the Division of Fleet Management ("DFM"), Office of Administrative Services ("OAS") within the Finance and Administration Cabinet ("FAC"). KRS 45.045 provides that the FAC shall purchase and maintain the state's fleet of automobiles. DFM is charged with managing and maintaining the Commonwealth's fleet of automobiles. This regulation sets forth the procedures regarding a state employee's use of and responsibilities regarding an automobile from the motor pool. While FAC maintains the fleet, this regulation states that the Transportation Cabinet maintains the fleet. This amendment will correct the regulation to reflect the authorizing statutes. This amendment also increases the length of time DFM will use an automobile before retiring it from the fleet and clarify the costs to agencies for the licensing, identification or other costs related to the use of the automobile.

(b) The necessity of this administrative regulation: KRS 44.045(6) authorizes the Secretary of the FAC to promulgate regulations relating to management of the state's motor pool. This regulation provides these procedures.

(c) How this administrative regulation conforms to the content of the authorizing statutes: KRS 44. 045(6) authorizes the regulation. KRS 45.0171(2) provides that DFM shall oversee the motor pool.

(d) How this administrative regulation currently assists or will assist in the effective administration of the statutes: This regulation will provide guidance to DFM and employees on the proper use of automobiles from the state fleet.

(2) If this is an amendment to an existing administrative regulation, provide a brief summary of:

(a) How the amendment will change this existing administrative regulation: As promulgated, this regulation states that the Transportation Cabinet will oversee the motor pool. This amendment will correct the regulation to reflect KRS 44.045's directive that FAC will oversee the fleet.

(b) The necessity of the amendment to this administrative regulation: KRS 44.045(6) authorizes the Secretary of the FAC to promulgate regulations relating to management of the state's motor pool. This regulation provides these procedures.

(c) How the amendment conforms to the content of the authorizing statutes: KRS 44.045(6) authorizes the regulation. KRS 45.0171(2) provides that DFM shall oversee the motor pool.

(d) How the amendment will assist in the effective administration of the statutes: This regulation will provide guidance to DFM and employees on the proper use of automobiles from the state fleet.

(3) List the type and number of individuals, businesses, organizations, or state and local governments affected by this administrative regulation: The regulation will affect every state employee who uses an automobile from the state's motor pool. It will also impact every agency that has not received an exemption from the Secretary of the FAC to operate an agency specific motor pool. The agencies that operate an agency specific motor pool are: Office of the Attorney General; state supported public universities; Kentucky State Police; and legislative and judicial branches of government.

(4) Provide an analysis of how the entities identified in question (3) will be impacted by either the implementation of this administrative regulation, if new, or by the change, if it is an amendment, including:

(a) List the actions that each of the regulated entities identified in question (3) will have to take to comply with this administrative regulation or amendment: The amendment will require no additional actions by regulated entities.

(b) In complying with this administrative regulation or amendment, how much will it cost each of the entities identified in question (3): the cost will be determined by the Kentucky Transportation Cabinet.

(c) As a result of compliance, what benefits will accrue to the entities identified in question (3): Regulated entities and employees will benefit from clear processes on the use of automobiles from the fleet.

(5) Provide an estimate of how much it will cost the administrative body to implement this administrative regulation:

(a) Initially: No additional costs.

(b) On a continuing basis: No additional costs to FAC.

(6) What is the source of the funding to be used for the implementation and enforcement of this administrative regulation: General fund

(7) Provide an assessment of whether an increase in fees or funding will be necessary to implement this administrative regulation, if new, or by the change if it is an amendment: No additional costs to FAC.

(8) State whether or not this administrative regulation established any fees or directly or indirectly increased any fees: The amendment clarifies that agencies will bear the costs of licensing, identification or other costs related to the use of an automobile from the fleet.

(9) TIERING: Is tiering applied? Tiering is not applied as this administrative regulation applies to all state employees and agencies which utilize automobiles from the motor pool.

FISCAL NOTE ON STATE OR LOCAL GOVERNMENT

1. What units, parts or divisions of state or local government (including cities, counties, fire departments, or school districts) will be impacted by this administrative regulation? The regulation will impact every state agency which uses automobiles from the state fleet. It will not affect the following agencies which maintain agency specific motor pool: Office of the Attorney General; state supported public universities; Kentucky State Police; and legislative and judicial branches of government.

2. Identify each state or federal statute or federal regulation that requires or authorizes the action taken by the administrative regulation. N/A

3. Estimate the effect of this administrative regulation on the expenditures and revenues of a state or local government agency (including cities, counties, fire departments, or school districts) for the first full year the administrative regulation is to be in effect. No impact on local jurisdictions or school districts; minimal impact on state agencies.

(a) How much revenue will this administrative regulation generate for the state or local government (including cities, counties, fire departments, or school districts) for the first year? None

(b) How much revenue will this administrative regulation generate for the state or local government (including cities, counties, fire departments, or school districts) for subsequent years? None

(c) How much will it cost to administer this program for the first year? No additional costs.

(d) How much will it cost to administer this program for subsequent years? See response to No. 3(c).

Note: If specific dollar estimates cannot be determined, provide a brief narrative to explain the fiscal impact of the administrative regulation.

Revenues (+/-): No additional revenues to state government.

Expenditures (+/-): No additional costs to state government.

Other Explanation: N/A

GENERAL GOVERNMENT CABINET
Kentucky Board of Licensed Diabetes Educators
(Amendment)

201 KAR 45:110. Supervision and work experience.

RELATES TO: KRS 309.331

STATUTORY AUTHORITY: KRS 309.331(1), 309.334(2)(a)

NECESSITY, FUNCTION AND CONFORMITY: KRS 309.331(1) requires the board to promulgate administrative regulations for the administration and enforcement of KRS 309.325 to 309.339. KRS 309.334(2)(a) requires the board to promulgate

administrative regulations to establish the duties of the apprentice diabetes educator supervisor. This administrative regulation establishes the amount of work experience required for licensure and the qualifications to be a supervisor.

Section 1. Accumulation of Work Experience. An apprentice diabetes educator shall accumulate at least 750 hours of supervised work experience within five (5) years from the date of application for licensure, of which 250 hours shall have been obtained within the last twelve (12) months preceding licensure application.

Section 2. Supervision. (1)(a) The apprentice diabetes educator shall:

1. Interact with the supervisor no less than two (2) hours per month in any month in which the apprentice accumulates work experience to discuss the apprentice diabetes educator's work with clients; and

2. Review the apprentice diabetes educator's provision of diabetes self-management education.

(b) The apprentice diabetes educator shall interact with the supervisor no less than two (2) hours quarterly while being physically present in the same room.

(2) The hours of work experience and verification by the apprentice diabetes educator and supervisor shall be documented on the Application for Licensure, Form DE-01.

(3) A supervisor shall not serve as a supervisor for more than four (4) apprentice diabetes educators at a time.

(4) The supervision process shall focus on:

(a) Identifying strengths, developmental needs, and providing direct feedback to foster the professional development of the apprentice diabetes educator;

(b) Identifying and providing resources to facilitate learning and professional growth;

(c) Developing awareness of professional and ethical responsibilities in the practice of diabetes education; and

(d) Ensuring the safe and effective delivery of diabetes education services and fostering the professional competence and development of the apprentice diabetes educator.

Section 3. Documentation Requirements. The documentation required by the Supervised Work Experience Report, Form DE-05 shall be maintained for a period of five (5) years and provided to the board at the request of the board.

Section 4. Incorporation by Reference. (1) The following material is incorporated by reference:

(a) "Application for Licensure", Form DE-01, 01/2015[~~08/2014~~]; and

(b) "Supervised Work Experience Report", Form DE-05, 06/2014.

(2) This material may be inspected, copied, or obtained, subject to applicable copyright law, at the Kentucky Board of Licensed Diabetes Educators, 911 Leawood Drive, Frankfort, Kentucky 40601, Monday through Friday, 8 a.m. to 5 p.m.

KIM DECOSTE, Chairperson

APPROVED BY AGENCY: December 15, 2014

FILED WITH LRC: December 15, 2014 at 11 a.m.

PUBLIC HEARING AND PUBLIC COMMENT PERIOD: A public hearing on this administrative regulation shall be held on January 27, 2015 at 9:30 AM Eastern Time at the Office of Occupations and Professions, 911 Leawood Drive, Frankfort, Kentucky 40601. Individuals interested in being heard at this hearing shall notify this agency in writing by 5 workdays prior to the hearing, of their intent to attend. If no notification of intent to attend the hearing is received by that date, the hearing may be cancelled. This hearing is open to the public. Any person who wished to be heard will be given an opportunity to comment on the proposed administrative regulation. A transcript of the public hearing will not be made unless a written request for a transcript is made. If you do not wish to be heard at the public hearing, you may submit written comments on the proposed administrative regulation. Written comments shall be accepted until close of business, February 2, 2015. Send written notification of intent to be heard at the public hearing or written comments on the proposed administrative regulation to the contact person.

CONTACT PERSON: Matt James, Board Counsel, Asst. Attorney General, Office of the Attorney General, 700 Capitol Avenue, Suite 118, Frankfort, Kentucky 40601, phone (502) 696-5300, fax (502) 564-9380.

REGULATORY IMPACT ANALYSIS AND TIERING STATEMENT

Contact Person: Matt James

(1) Provide a brief summary of:

(a) What this administrative regulation does: The regulation establishes the work experience and supervision required for licensure.

(b) The necessity of this administrative regulation: This regulation is necessary because it explains the amount of work experience needed for licensure and the standards for supervision.

(c) How this administrative regulation conforms to the content of the authorizing statues: The board is given the authority to establish administrative regulations for the practice of diabetes educators.

(d) How this administrative regulation currently assists or will assist in the effective
administration of the statutes: This administrative regulation sets forth the definitions of work experience and supervision for apprentice diabetes educators.

(2) If this is an amendment to an existing administrative regulation, provide a brief summary of:

(a) How the amendment will change this existing administrative regulation: The amendment updates material incorporated by reference by specifying that the 750 hours of work experience required must be accumulated as an apprentice diabetes educator.

(b) The necessity of the amendment to this administrative regulation: The material incorporated by reference is being updated to specify that the 750 hours of work experience required must be accumulated as an apprentice diabetes educator.

(c) How the amendment conforms to the content of the authorizing statutes: This amendment updates the application form.

(d) How the amendment will assist in the effective and administration of the statutes: This amendment will update the application form.

(3) List the type and number of individuals, businesses, organizations, or state and local governments affected by this administrative regulation: Over 100 individuals have already been licensed as diabetes educators, and future applications may result in up to 250 individuals being licensed as diabetes educators.

(4) Provide an analysis of how the entities identified in question (3) will be impacted by either the implementation of this regulation, if new, or by the change if it is an amendment, including:

(a) List the actions that each of the regulated entities identified in question (3) will have to take to comply with the administrative regulation or amendment: This amendment updates the forms that apprentice diabetes educators are required to file.

(b) In complying with this administrative regulation or amendment, how much will it cost each of the entities identified in question (3): The fee for applying is established in a separate regulation.

(c) As a result of compliance, what benefits will accrue to the entities identified in question (3): Apprentice diabetes educators will be able to apply for licensure and receive supervision.

(5) Provide an estimate of how much it will cost to implement this administrative regulation:

(a) Initially: The budget for the board is unknown, as it is unknown how many persons will ultimately apply for licensure.

(b) On a continuing basis: The budget for the board cannot be estimated for the future until the total number of licensees is known with more precision.

(6) What is the source of the funding to be used for the implementation and enforcement of this administrative regulation: The board's operation is funded by the fees paid by licensees and

apprentice diabetes educators.

(7) Provide an assessment of whether an increase in fees or funding will be necessary to implement this administrative regulation, if new or by the change if it is an amendment: No increase in fees or funding will be necessary to implement this administrative regulation.

(8) State whether or not this administrative regulation establishes any fees or directly or indirectly increases any fees: This administrative regulation did not establish the fees. The application fee is set in a separate regulation.

(9) TIERING: Is tiering applied? Tiering was not applied because these requirements apply equally to all licensees.

FISCAL NOTE ON STATE OR LOCAL GOVERNMENT

1. What units, parts or divisions of state or local government (including cities, countries fire departments, or school districts) will be impacted by this administrative regulation? The Kentucky Board of Licensed Diabetes Educators is housed for administrative purposes within the Office of Occupations and Professions in the Public Protection Cabinet.

2. Identify each state or federal statute or federal regulation that requires or authorizes the action taken by the administrative regulation. KRS 309.331, 309.334

3. Estimate the effect of this administrative regulation on the expenditures and revenues of a state or local government agency (including cities, counties, fire departments or school districts) for the first full year the administrative regulation is to be in effect.

(a) How much revenue will this administrative regulation generate for the state or local government (including cities, counties, fire departments or school districts) for the first year? The revenue generated will depend on the number of apprentice diabetes educators for the year.

(b) How much revenue will this administrative regulation generate for the state or local government (including cities, counties, fire departments or school districts) for subsequent years? The revenue will depend on the number of apprentice diabetes educators for the subsequent years.

(c) How much will it cost to administer this program for the first year? The board is charged an annual fee of $1,000 by the Office of Occupations & Professions for the administrative services provided prior to the issuing of licenses.

(d) How much will it cost to administer this program for subsequent years? The board will be charged an annual fee of $1,000 by the Office of Occupations & Professions for the administrative services provided prior to the issuing of licenses for this biennium. The fee will be reviewed when determining the next biennium budget.

Note: If specific dollar estimates cannot be determined, provide a brief narrative to explain the fiscal impact of the administrative regulation.

Revenues (+/-): N/A

Expenditures (+/-): N/A

Other Explanation: N/A

GENERAL GOVERNMENT CABINET
Kentucky Board of Licensed Diabetes Educators
(Amendment)

201 KAR 45:120. Renewal, reinstatement, and inactive status.

RELATES TO: KRS 309.331, 309.334, 309.335

STATUTORY AUTHORITY: KRS 309.331(1), 309.335

NECESSITY, FUNCTION, AND CONFORMITY: KRS 309.331 requires the board to promulgate administrative regulations establishing procedures for annual renewal and reinstatement of licenses. This administrative regulation establishes procedures for annual renewal and reinstatement of licenses.

Section 1. Regular License Renewal. (1) A licensed diabetes educator or master licensed diabetes educator shall submit to the board by November 1 of each year:

(a) A completed Renewal Application, Form DE-02;

(b) Proof of the required continuing education as set forth in 201 KAR 45:130; and;

(c) The renewal fee as established in 201 KAR 45:100.

(2) If a license is not renewed by January 30 of the new licensure year, it shall automatically expire.

Section 2. Reinstatement. (1) An expired license shall be reinstated upon the licensee:

(a) Paying the required fees established in 201 KAR 45:100; and

(b) Submitting proof of completion of an amount of continuing education courses equivalent to the continuing education requirements as established in 201 KAR 45:130 for each year since the last date the license was active.

(2) An expired license may be reinstated within five (5) years of the date of expiration.

Section 3. Inactive Status. (1) A licensee may place his or her license in inactive status by submitting written notice to the board prior to November 1.

(2)(a) An individual with an inactive license shall not be permitted to practice diabetes education while the license is inactive.

(b) A licensee may remain in inactive status for a maximum of five (5) years.

(3)(a) During the period of inactive status, the licensee shall not be required to meet the annual continuing education requirements as established in 201 KAR 45:130.

(b) Upon the licensee's request for licensure reactivation, the licensee shall provide proof of completion of an amount of continuing education courses equivalent to the continuing education requirements as established in 201 KAR 45:130 for each year the license was inactive.

(4)(a) An individual shall submit in writing a request to the board to be placed back in active status.

(b) The request shall be submitted at least one (1) week in advance of the board's regularly scheduled board meeting.

Section 4. Regular Permit Renewal. (1) An apprentice diabetes educator shall submit to the board by November 1 of each year:

(a) A completed Apprentice Renewal Application, Form DE-04;

(b) Proof of the required continuing education established in 201 KAR 45:130; and

(c) The renewal fee established in 201 KAR 45:100.

(2)(a) If a permit is not renewed by January 30 of the new licensure year, it shall automatically expire, and the apprentice diabetes educator shall reapply for a permit as established in KRS 309.334.

(b) Work experience accumulated shall not carry over between permits.

Section 5. Incorporation by Reference. (1) The following material is incorporated by reference:

(a) "Renewal Application", Form DE-02, 01/2015[~~06/2013~~]; and

(b) "Apprentice Renewal Application", Form DE-04, 08/2014.

(2) This material may be inspected, copied, or obtained, subject to applicable copyright law, at the Kentucky Board of Licensed Diabetes Educators, 911 Leawood Drive, Frankfort, Kentucky 40601, Monday through Friday, 8 a.m. to 5 p.m.

KIM DECOSTE, Chairperson

APPROVED BY AGENCY: December 15, 2014

FILED WITH LRC: December 15, 2014 at 11 a.m.

PUBLIC HEARING AND PUBLIC COMMENT PERIOD: A public hearing on this administrative regulation shall be held on January 27, 2015 at 9:30 AM Eastern Time at the Office of Occupations and Professions, 911 Leawood Drive, Frankfort, Kentucky 40601. Individuals interested in being heard at this hearing shall notify this agency in writing by 5 workdays prior to the hearing, of their intent to attend. If no notification of intent to attend the hearing is received by that date, the hearing may be cancelled.

This hearing is open to the public. Any person who wished to be heard will be given an opportunity to comment on the proposed administrative regulation. A transcript of the public hearing will not be made unless a written request for a transcript is made. If you do not wish to be heard at the public hearing, you may submit written comments on the proposed administrative regulation. Written comments shall be accepted until close of business, February 2, 2015. Send written notification of intent to be heard at the public hearing or written comments on the proposed administrative regulation to the contact person.

CONTACT PERSON: Matt James, Board Counsel, Asst. Attorney General, Office of the Attorney General, 700 Capitol Avenue, Suite 118, Frankfort, Kentucky 40601, phone (502) 696-5300, fax (502) 564-9380.

REGULATORY IMPACT ANALYSIS AND TIERING STATEMENT

Contact Person: Matt James

(1) Provide a brief summary of:

(a) What this administrative regulation does: The regulation establishes the process to renew and reinstate a license and place a license into inactive status.

(b) The necessity of this administrative regulation: This regulation is necessary because it explains how a licensee can renew his license before it expires, reinstate the license once it has expired and place it into an inactive status.

(c) How this administrative regulation conforms to the content of the authorizing statues: The Board is given the authority to establish administrative regulations for the licensing of diabetes educators.

(d) How this administrative regulation currently assists or will assist in the effective
administration of the statutes: This administrative regulation sets forth the process to renew and reinstate a license and place a license into inactive status.

(2) If this is an amendment to an existing administrative regulation, provide a brief summary of:

(a) How the amendment will change this existing administrative regulation: The amendment updates a form to reflect the grace period in fees for renewals in 201 KAR 45:100.

(b) The necessity of the amendment to this administrative regulation: The amendment updates a form to reflect the grace period in fees for renewals in 201 KAR 45:100.

(c) How the amendment conforms to the content of the authorizing statutes: KRS 309.335(1)(c) authorizes the board to promulgate administrative regulations regulating renewal fees.

(d) How the amendment will assist in the effective and administration of the statutes: This amendment will update a form to reflect the grace period in fees for renewals in 201 KAR 45:100.

(3) List the type and number of individuals, businesses, organizations, or state and local governments affected by this administrative regulation: Over 100 individuals have already been licensed as diabetes educators, and future applications may result in up to 250 individuals being licensed as diabetes educators.

(4) Provide an analysis of how the entities identified in question (3) will be impacted by either the implementation of this regulation, if new, or by the change if it is an amendment, including:

(a) List the actions that each of the regulated entities identified in question (3) will have to take to comply with the administrative regulation or amendment: This administrative regulation requires licensees to fill out an application for renewal and reinstatement, along with paying a fee. The licensee applying for inactive status will provide written notice to the Board.

(b) In complying with this administrative regulation or amendment, how much will it cost each of the entities identified in question (3): The fee for applying will be established in a separate regulation.

(c) As a result of compliance, what benefits will accrue to the entities identified in question (3): The licensee will be able to continue to practice diabetes education. The inactive license holder will not have to meet the regular requirements for licensure.

(5) Provide an estimate of how much it will cost to implement this administrative regulation:

(a) Initially: The budget for the board is unknown, as it is unknown how many persons will ultimately apply for licensure.

(b) On a continuing basis: The budget for the board cannot be estimated for the future until the total number of licensees is known with more precision.

(6) What is the source of the funding to be used for the implementation and enforcement of this administrative regulation: The board's operation is funded by the fees paid by licensees and applicants.

(7) Provide an assessment of whether an increase in fees or funding will be necessary to implement this administrative regulation, if new or by the change if it is an amendment: No increase in fees or funding will be necessary.

(8) State whether or not this administrative regulation establishes any fees or directly or indirectly increases any fees: This administrative regulation did not establish the fees but there will be a fee applied that is set in a separate regulation for renewal and reinstatement.

(9) TIERING: Is tiering applied? Tiering was not applied because these requirements apply equally to all licensees.

FISCAL NOTE ON STATE OR LOCAL GOVERNMENT

1. What units, parts or divisions of state or local government (including cities, countries fire departments, or school districts) will be impacted by this administrative regulation? The Kentucky Board of Licensed Diabetes Educators is housed for administrative purposes within the Office of Occupations and Professions in the Public Protection Cabinet.

2. Identify each state or federal statute or federal regulation that requires or authorizes the action taken by the administrative regulation. KRS 309.331, 309.335

3. Estimate the effect of this administrative regulation on the expenditures and revenues of a state or local government agency (including cities, counties, fire departments or school districts) for the first full year the administrative regulation is to be in effect.

(a) How much revenue will this administrative regulation generate for the state or local government (including cities, counties, fire departments or school districts) for the first year? The revenue generated will depend on the number of applicants for the year.

(b) How much revenue will this administrative regulation generate for the state or local government (including cities, counties, fire departments or school districts) for subsequent years? The revenue will depend on the number of applicants for the subsequent years.

(c) How much will it cost to administer this program for the first year? The board is charged an annual fee of $1,000 by the Office of Occupations & Professions for the administrative services provided prior to the issuing of licenses.

(d) How much will it cost to administer this program for subsequent years? The board will be charged an annual fee of $1,000 by the Office of Occupations & Professions for the administrative services provided prior to the issuing of licenses for this biennium. The fee will be reviewed when determining the next biennium budget.

Note: If specific dollar estimates cannot be determined, provide a brief narrative to explain the fiscal impact of the administrative regulation.

Revenues (+/-): N/A

Expenditures (+/-): N/A

Other Explanation: N/A

GENERAL GOVERNMENT CABINET
Kentucky Board of Licensed Diabetes Educators
(Amendment)

201 KAR 45:170. Application procedures.

RELATES TO: KRS 309.331, 309.334, 309.335, 309.336
STATUTORY AUTHORITY: KRS 309.331(1), 309.334(2)(c), 309.335, 309.336(2)(b)
NECESSITY, FUNCTION, AND CONFORMITY: KRS 309.331(1) requires the board to promulgate administrative regulations for the administration and enforcement of KRS 309.325 to 309.339. KRS 309.335(1) requires an applicant for licensure as a licensed diabetes educator to file an application as provided by the board and to show successful completion of a course or program as determined by the board. KRS 309.334(2)(c) requires the board to establish additional requirements to apply for an apprentice diabetes educator permit, and KRS 309.336(2)(b) requires the board to establish additional requirements to apply for licensure as a master licensed diabetes educator. This administrative regulation establishes application procedures for licensed diabetes educators, master licensed diabetes educators, and apprentice diabetes educators.

Section 1. Licensed Diabetes Educator Application Procedures. An applicant for licensure as a licensed diabetes educator shall submit to the board:
(1) A completed Application for Licensure, Form DE-01, incorporated by reference in 201 KAR 45:110, including documentation verifying completion of 750 hours of work experience as an apprentice diabetes educator under a supervisor as provided in 201 KAR 45:110;
(2) Evidence to the board showing successful completion of one (1) of the following:
(a) A board-approved course as specified in 201 KAR 45:180;
(b) The credentialing program of the American Association of Diabetes Educators or the National Certification Board for Diabetes Educators; or
(c) An equivalent credentialing program pursuant to KRS 309.335(1); and
(3) Payment of the licensure fee as established in 201 KAR 45:100.

Section 2. Master Licensed Diabetes Educator Application Procedures. An applicant for licensure as a master licensed diabetes educator shall submit to the board:
(1) A completed Application for Licensure, Form DE-01;
(2) Proof of completion of the credentialing program of the American Association of Diabetes Educators or the National Certification Board for Diabetes Educators in Board Certified Advanced Diabetes Management or as a Certified Diabetes Educator; and
(3) Payment of the licensure fee as established in 201 KAR 45:100.

Section 3. Apprentice Diabetes Educator Application Procedures. An applicant for an apprentice diabetes educator permit shall submit to the board:
(1) A completed Application for Apprentice Diabetes Educator Permit, Form DE-03;
(2) Payment of the licensure fee as established in 201 KAR 45:100; and
(3) Proof of an active license or certification in good standing as at least one (1) of the following:
(a) American College of Sports Medicine Certified Clinical Exercise Specialist or Registered Clinical Exercise Physiologist;
(b)1. Certified social worker or licensed clinical social worker pursuant to KRS Chapter 335; and
2. The applicant shall also have at least two (2) years of experience in a health profession;
(c) Dietitian pursuant to KRS Chapter 310;
(d) Health educator holding active certification as a master certified health education specialist with the National Commission on Health Education Credentialing;
(e) Nutritionist pursuant to KRS Chapter 310;
(f) Occupational therapist pursuant to KRS Chapter 319A;
(g) Optometrist pursuant to KRS Chapter 320;
(h) Osteopath pursuant to KRS Chapter 311;
(i) Pharmacist pursuant to KRS Chapter 315;
(j) Physical therapist pursuant to KRS Chapter 327;
(k) Physician pursuant to KRS Chapter 311;
(l) Physician assistant pursuant to KRS Chapter 311;
(m) Podiatrist pursuant to KRS Chapter 311;
(n) Psychologist pursuant to KRS Chapter 319;
(o) Registered nurse pursuant to KRS Chapter 314; or
(p) A license or certification from a state or the District of Columbia equivalent to one (1) of the licenses or certifications listed in this subsection.
(4) The board shall not consider an applicant for an apprentice diabetes educator permit who does not hold an active license or certification as listed in subsection (3) of this section.
(5) An applicant for an apprentice diabetes educator permit shall include the Supervised Work Experience Report, Form DE-05, incorporated by reference in 201 KAR 45:110.

Section 4. Incorporation by Reference. (1) "Application for Apprentice Diabetes Educator Permit", Form DE-03, 08/2014, is incorporated by reference.
(2) This material may be inspected, copied, or obtained, subject to applicable copyright law, at the Kentucky Board of Licensed Diabetes Educators, 911 Leawood Drive, Frankfort, Kentucky 40601, Monday through Friday, 8 a.m. to 5 p.m.

KIM DECOSTE, Chairperson
APPROVED BY AGENCY: December 15, 2014
FILED WITH LRC: December 15, 2014 at 11 a.m.
PUBLIC HEARING AND PUBLIC COMMENT PERIOD: A public hearing on this administrative regulation shall be held on January 27, 2015 at 9:30 AM Eastern Time at the Office of Occupations and Professions, 911 Leawood Drive, Frankfort, Kentucky 40601. Individuals interested in being heard at this hearing shall notify this agency in writing by 5 workdays prior to the hearing, of their intent to attend. If no notification of intent to attend the hearing is received by that date, the hearing may be cancelled. This hearing is open to the public. Any person who wished to be heard will be given an opportunity to comment on the proposed administrative regulation. A transcript of the public hearing will not be made unless a written request for a transcript is made. If you do not wish to be heard at the public hearing, you may submit written comments on the proposed administrative regulation. Written comments shall be accepted until close of business, February 2, 2015. Send written notification of intent to be heard at the public hearing or written comments on the proposed administrative regulation to the contact person.
CONTACT PERSON: Matt James, Board Counsel, Asst. Attorney General, Office of the Attorney General, 700 Capitol Avenue, Suite 118, Frankfort, Kentucky 40601, phone (502) 696-5300, fax (502) 564-9380.

REGULATORY IMPACT ANALYSIS AND TIERING STATEMENT

Contact Person: Matt James
(1) Provide a brief summary of:
(a) What this administrative regulation does: The regulation establishes the requirements to apply for licensure.
(b) The necessity of this administrative regulation: This regulation is necessary because it establishes the requirements to apply for licensure.
(c) How this administrative regulation conforms to the content of the authorizing statues: The board is given the authority to establish regulations for the practice of diabetes educators.
(d) How this administrative regulation currently assists or will assist in the effective
administration of the statutes: This administrative regulation will establish the requirements to apply for licensure.
(2) If this is an amendment to an existing administrative

regulation, provide a brief summary of:

(a) How the amendment will change this existing administrative regulation: This amendment requires completion of 750 hours of supervised work experience as an apprentice diabetes educator prior to application for licensure.

(b) The necessity of the amendment to this administrative regulation: This amendment requires that the 750 hours of supervised work experience be earned as an apprentice diabetes educator. The current regulation only requires completion of Form DE-01, which only requires 750 hours of supervised work experience.

(c) How the amendment conforms to the content of the authorizing statutes: KRS 309.331 authorizes the Kentucky Board of Licensed Diabetes Educators to promulgate administrative regulations in accordance with KRS Chapter 13A to carry out and enforce KRS 309.325 to 309.339.

(d) How the amendment will assist in the effective and administration of the statutes: The amendment will ensure that the only persons applying to be licensed diabetes educators will have completed the apprenticeship requirements.

(3) List the type and number of individuals, businesses, organizations, or state and local governments affected by this administrative regulation: Over 600 individuals are currently licensed diabetes educators or master licensed diabetes educators. Three (3) individuals currently hold permits as apprentice diabetes educators. It is unknown how many individuals will apply as apprentice diabetes educators.

(4) Provide an analysis of how the entities identified in question (3) will be impacted by either the implementation of this regulation, if new, or by the change if it is an amendment, including:

(a) List the actions that each of the regulated entities identified in question (3) will have to take to comply with the administrative regulation or amendment: Applicants for licensure will be required to comply with the application procedures.

(b) In complying with this administrative regulation or amendment, how much will it cost each of the entities identified in question (3): The fee for applying is established in a separate regulation.

(c) As a result of compliance, what benefits will accrue to the entities identified in question (3): Applicants for licensure will be able to apply for licensure.

(5) Provide an estimate of how much it will cost to implement this administrative regulation:

(a) Initially: The budget for the board is unknown, as it is unknown how many persons will ultimately apply for licensure.

(b) On a continuing basis: The budget for the board cannot be estimated for the future until the total number of licensees is known with more precision.

(6) What is the source of the funding to be used for the implementation and enforcement of this administrative regulation: The board's operation is funded by the fees paid by licensees and apprentice diabetes educators.

(7) Provide an assessment of whether an increase in fees or funding will be necessary to implement this administrative regulation, if new or by the change if it is an amendment: No increase in fees or funding will be necessary to implement this administrative regulation.

(8) State whether or not this administrative regulation establishes any fees or directly or indirectly increases any fees: This administrative regulation does not establish or increase any fees. The application fee is set in a separate regulation.

(9) TIERING: Is tiering applied? Tiering was not applied because these requirements apply equally to all licensees.

FISCAL NOTE ON STATE OR LOCAL GOVERNMENT

1. What units, parts or divisions of state or local government (including cities, countries fire departments, or school districts) will be impacted by this administrative regulation? The Kentucky Board of Licensed Diabetes Educators is housed for administrative purposes within the Office of Occupations and Professions in the Public Protection Cabinet.

2. Identify each state or federal statute or federal regulation that requires or authorizes the action taken by the administrative regulation. KRS 309.331, 309.334, 309.335, 309.336

3. Estimate the effect of this administrative regulation on the expenditures and revenues of a state or local government agency (including cities, counties, fire departments or school districts) for the first full year the administrative regulation is to be in effect.

(a) How much revenue will this administrative regulation generate for the state or local government (including cities, counties, fire departments or school districts) for the first year? The revenue generated will depend on the number of diabetes educators for the year.

(b) How much revenue will this administrative regulation generate for the state or local government (including cities, counties, fire departments or school districts) for subsequent years? The revenue will depend on the number of diabetes educators for the subsequent years.

(c) How much will it cost to administer this program for the first year? The board is charged an annual fee of $1,000 by the Office of Occupations & Professions for the administrative services provided prior to the issuing of licenses.

(d) How much will it cost to administer this program for subsequent years? The board will be charged an annual fee of $1,000 by the Office of Occupations & Professions for the administrative services provided prior to the issuing of licenses for this biennium. The fee will be reviewed when determining the next biennium budget.

Note: If specific dollar estimates cannot be determined, provide a brief narrative to explain the fiscal impact of the administrative regulation.

Revenues (+/-): N/A

Expenditures (+/-): N/A

Other Explanation: N/A

TOURISM, ARTS AND HERITAGE CABINET
Kentucky Department of Fish and Wildlife Resources
(Amendment)

301 KAR 2:049. Small game and furbearer hunting and trapping on public[~~and other federally owned~~] areas.

RELATES TO: KRS 150.010, 150.092, 150.170, 150.370, 150.399,[~~150.400, 150.410,~~] 150.990, 150.995

STATUTORY AUTHORITY: KRS 150.025(1), 150.175(7), (9), 150.360, 150.400, 150.410, 150.620

NECESSITY, FUNCTION, AND CONFORMITY: KRS 150.025(1) authorizes the department to promulgate administrative regulations to establish open seasons for the taking of wildlife, to regulate bag limits and methods of take, and to make these requirements apply statewide or to a limited area. KRS 150.175 (7), (9) authorizes the department to issue licenses, permits, and tags for hunting and trapping. KRS 150.360 requires restrictions on the taking of wildlife and authorizes the department to promulgate administrative regulations establishing the requirements for hunting coyotes at night. KRS 150.400 authorizes the department to establish the types of traps that can legally be used by trappers. KRS 150.410 authorizes the department to regulate trap tags, trap visitation, and trap placement to protect domestic animals. KRS 150.620 authorizes the department to promulgate administrative regulations for the maintenance and operation of the lands it has acquired for public recreation. This administrative regulation establishes exceptions to statewide small game and furbearer regulations on public areas.

Section 1. Definitions. (1) "Adult" means a person who is at least eighteen (18) years of age.

(2) "Body-gripping trap" means a commercially manufactured spring-loaded trap designed to kill the animal upon capture.

(3) "Dry land set" means a trap that is set so that no portion of the trap touches the water of a stream, river, pond, lake, wetland, or other water course.

(4) "Furbearer" means mink, muskrat, beaver, raccoon, opossum, gray fox, red fox, least weasel, long-tailed weasel, river

otter, bobcat, coyote, or striped skunk.

(5) "Upland bird" means a grouse or northern bobwhite.

(6)[~~(3)~~] "Wildlife Management Area" or "WMA" means a tract of land:

(a) Controlled by the department through ownership, lease, license, or cooperative agreement; and

(b) That has "Wildlife Management Area" or "WMA" as part of its official name.

(7)[~~(4)~~] "Youth" means a person under the age of sixteen (16) by the date of the hunt.

Section 2. This administrative regulation shall establish exceptions to the statewide requirements established in 301 KAR 2:122, 2:251, and 3:010.

Section 3. General Requirements on a Wildlife Management Area or Outdoor Recreation Area. (1) Except as established in subsection (2) of this section, a person hunting any species during daylight hours, and any person accompanying that hunter, shall comply with hunter orange requirements as established in 301 KAR 2:132, 2:172, and 2:300.

(2) The hunter orange clothing requirement in subsection (1) of this section shall not apply to a person:

(a) Hunting dove or waterfowl as established in 301 KAR 2:225;

(b) Hunting waterfowl as established in 301 KAR 2:221, 2:222, or 2:226; or

(c) Trapping furbearers as established in 301 KAR 2:251.

(3) There shall be a free youth small game hunting week for seven (7) consecutive days beginning on the Saturday after Christmas, in which a youth may take small game without a hunting license.

(4) There shall be a free youth trapping week for seven (7) consecutive days beginning on the Saturday after Christmas, in which a youth may trap without a trapping license.

(5) A body-gripping trap shall have a maximum inside jaw spread of five and one-quarter (5.25) inches measured:

(a) In the center of the trap; and

(b) In the unset position.

(6) Dry land sets shall not be placed closer than ten (10) feet apart.

(7) A person wishing to trap shall complete a KDFWR Public Area Trapping Registration Form obtained from a department office or the department's Web site at fw.ky.gov:

(a) For each Wildlife Management Area or Outdoor Recreation Area a person intends to trap; and

(b) Prior to trapping.

Section 4. Exceptions on Wildlife Management Areas and Outdoor Recreation Areas. (1) Barren River Wildlife Management Area.

(a) The WMA shall be considered to be entirely within the Eastern Zone, as established in 301 KAR 2:122.

(b) Northern bobwhite and rabbit seasons shall be closed after December 31.

(c) On the Peninsula Unit, including Narrows, Goose and Grass Islands, a person shall not hunt with a breech-loading firearm.

(2) Beaver Creek WMA, including private inholdings.

(a) Grouse season shall be open from October 1 through December 31.

(b) Northern bobwhite and rabbit seasons shall be closed after December 31.

(c) A person shall hunt coyotes during daylight hours only.

(3) Cane Creek WMA, including private inholdings.

(a) Grouse season shall be open from October 1 through December 31.

(b) Northern bobwhite and rabbit seasons shall be closed after December 31.

(c) A person shall hunt coyotes during daylight hours only.

(4) Cedar Creek Lake WMA.

(a) Rabbit season shall be closed after December 31.

(b) With the exception of the statewide squirrel season, the area shall be closed to all other small game and furbearer hunting.

(5) Clay WMA.

(a) The area shall be closed for four (4) consecutive days beginning on the first Friday in December to all hunting except archery deer hunting and the pheasant quota hunt established in Section 5 of this administrative regulation.

(b) Rabbit season shall be closed after December 31.

(c) Grouse and northern bobwhite hunting shall be restricted to quota hunt dates established in Section 5 of this administrative regulation.

(d) Pheasant may be taken beginning on the Tuesday following the pheasant quota hunt through December 31.

1. Any person with a valid hunting license may take a pheasant.

2. The daily limit per hunter shall be three (3) birds of either sex.

(e) Quota fox hunting field trials.

1. There shall be a maximum of two (2) four (4) day events per calendar year.

2. Each event shall be limited to 250 participants.

3. The area shall be closed to nonparticipants.

4. A participant shall:

a. Wear a laminated identification badge issued by the department during the event; and

b. Return the laminated badge at the close of the event.

(6) Curtis Gates Lloyd WMA.

(a) Northern bobwhite and rabbit seasons shall be closed after December 31.

(b) A person shall not allow a dog to be unleashed from April 1 until the third Saturday in August except if squirrel hunting.

(7) Dix River WMA.

(a) Northern bobwhite and rabbit seasons shall be closed after December 31.

(b) Grouse season shall be open from October 1 through December 31.

(8) Fleming WMA.

(a) Northern bobwhite and rabbit seasons shall be closed after December 31.

(b) Grouse season shall be open from October 1 through December 31.

(9) Green River Lake WMA.

(a) The area shall be closed to all hunting for four (4) consecutive days beginning on the third Friday in November except for archery deer hunting and the pheasant quota hunt established in Section 5 of this administrative regulation.

(b) Northern bobwhite and rabbit seasons shall be closed after December 31.

(c) Pheasant.

1. Beginning on the Tuesday following the pheasant quota hunt through December 31, any person with a valid hunting license may take a pheasant.

2. The daily limit per hunter shall be three (3) birds of either sex.

(d) The area shall be closed to grouse hunting and trapping.

(10) Higginson-Henry WMA. Northern bobwhite and rabbit seasons shall be closed after December 31.

(11) Kleber WMA. Northern bobwhite and rabbit seasons shall be closed after December 31.

(12) Lake Cumberland WMA.

(a) Grouse season shall be open from October 1 through December 31.

(b) Northern bobwhite and rabbit seasons shall be closed after December 31.

(13) Mill Creek WMA.

(a) Northern bobwhite and rabbit seasons shall be closed after December 31.

(b) A person shall hunt coyotes during daylight hours only.

(14) Miller-Welch Central Kentucky WMA.

(a) Small game and furbearer hunting seasons shall be closed, except that squirrel season shall be open.

(b) A person shall not allow a dog to be unleashed:

1. From April 1 until the third Saturday in August; or

2. On a Monday, Wednesday, or Friday during the remainder

of the year, except:

a. If a person is hunting squirrels during an open season; or

b. If a person is participating in an authorized field trial.

(15) Mullins WMA. Northern bobwhite and rabbit seasons shall be closed after December 31.

(16) Nolin Lake WMA. Northern bobwhite and rabbit seasons shall be closed after December 31.

(17) Otter Creek Outdoor Recreation Area.

(a) Except as authorized by the department, a person shall not enter the area during a deer quota hunt without a valid quota hunt confirmation number.

(b) Northern bobwhite season shall be closed.

(c) Rabbit hunting season shall be from December 1 through December 31.

(d) Trapping season shall be from January 1 through the last day in February.

(e) A person who traps on the area shall:

1. First obtain prior authorization from the area manager; and

2. Only trap in department designated areas.

(f) Except during deer quota hunts, a person shall not use the following to take furbearers:

1. A rifle;

2. Ball ammunition; or

3. Slug ammunition.

(g) A person shall not use a rimfire gun to take small game, except during a deer quota hunt.

(18) Paul Van Booven WMA. The area shall be closed to vehicle access from one (1) hour after sunset until one (1) hour before sunrise.

(19) Peabody WMA.

(a) Northern bobwhite hunting on the Sinclair Unit shall:

1. Have shooting hours between 7:30 a.m. and 3:00 p.m.; and

2. Be closed on Sunday.

(b) A northern bobwhite hunter on the Sinclair Unit shall:

1. Check in and check out at the Peabody WMA office; and

2. Visibly display a hunting log on the dashboard of the hunter's vehicle.

(20) Pennyrile Forest WMA.

(a) Grouse season shall be open from December 1 through December 31.

(b) The daily limit shall be two (2).

(21) Pioneer Weapons WMA.

(a) A person shall not hunt with a breech-loading firearm.

(b) A person shall hunt coyotes during daylight hours only.

(22) Redbird WMA. A person shall hunt coyotes during daylight hours only.

(23) Robinson Forest WMA.

(a) Hunting shall not be permitted on the Main Block.

(b) The remainder of the WMA shall be open under statewide requirements.

(24)[~~(c) A person shall hunt coyotes during daylight hours only.~~ ~~(23)~~] Taylorsville Lake WMA. Northern bobwhite and rabbit seasons shall be closed after December 31.

(25)[~~(24)~~] Tradewater WMA.

(a) Grouse season shall be open from December 1 through December 31.

(b) The daily limit shall be two (2) grouse.

(26)[~~(25)~~] West Kentucky WMA.

(a) A person shall check in daily at a designated check station prior to using an "A" tract.

(b) Northern bobwhite and rabbit seasons shall be closed after December 31 on Tracts 2, 3, 6, and 7.

(c) Northern bobwhite and rabbit seasons shall be open on Tracts 1, 4, 5, and "A" beginning one-half (1/2) hour before sunrise until 1:00 p.m. local time from January 1 through January 10, except if harvest limits are reached prior to January 10.

1. A hunter shall report harvest numbers and total hours hunted to the area supervisor on a daily basis.

2. If a tract is closed prior to January 10, a sign indicating closure shall be posted at the hunter check station at least twenty-four (24) hours prior to the closure.

(d) A person shall not:

1. Use a rifle, ball, or slug ammunition;

2. Operate a vehicle on Tract 6 from February 1 through April 16; or

3. Allow a dog to be unleashed from April 1 until the third Saturday in August, except while squirrel hunting.

(27)[~~(26)~~] Yellowbank WMA.

(a) Northern bobwhite and rabbit seasons shall be closed after December 31.

(b) Pheasant may be taken beginning on the Tuesday following the pheasant quota hunt through December 31.

(c) A person shall:

1. Possess a valid hunting license to take pheasant, unless exempt pursuant to KRS 150.170; and

2. Not take more than three (3) pheasants of either sex.

Section 5. Pheasant Quota Hunts. (1) There shall be a pheasant quota hunt on:

(a) Green River Wildlife Management Area for three (3) consecutive days beginning the third Friday in November;

(b) Clay Wildlife Management Area for three (3) consecutive days beginning the first Friday in December; and

(c) Yellowbank Wildlife Management Area for three (3) consecutive days beginning on the second Friday in December.

(2) There shall be a one (1) day clean-up hunt immediately following each of the hunts for pheasant quota hunters drawn for that particular WMA.

(3) Hunt hours for each day shall be from 9:00 a.m. to 4:00 p.m.:

(a) Eastern time for the Green River Wildlife Management Area and Clay Wildlife Management Area hunts; and

(b) Central time for the Yellowbank Wildlife Management Area hunt.

(4) During a quota hunt or clean-up hunt, a person shall wear orange clothing as established in 301 KAR 2:172.

(5) The daily bag limit per hunter shall be two (2) birds of either sex, except there shall be a daily bag limit of three (3) birds of either sex during the one (1) day clean-up hunt.

(6) Pheasant quota hunt procedures.

(a) A person selected for a pheasant quota hunt may hunt on the one (1) day clean-up hunt for that area.

(b) A person applying for a pheasant quota hunt shall:

1. Not apply more than one (1) time for each hunt and shall not be drawn for more than one (1) hunt; and

2. Not apply as a group of more than five (5) people.

(c) A person who is drawn to hunt shall pay the pheasant quota hunt permit fee established in 301 KAR 3:022 prior to the hunt.

Section 6. Northern Bobwhite and Upland Bird Quota Hunts. (1) There shall be one (1) day northern bobwhite quota hunts on one (1) tract of Peabody WMA on the following days:

(a) The fourth Saturday in November, which shall only be a youth-mentor hunt;

(b) The Tuesday following the fourth Saturday in November;

(c) The Tuesday following the third Saturday in December;

(d) The first Saturday in January;

(e) The second Saturday in January; and

(f) The Tuesday following the third Saturday in January.

(2) There shall be one (1) day upland bird quota hunts on Clay WMA on the following days:

(a) On the Wednesday following the first Saturday in November;

(b) The third Sunday in November;

(c) The second Sunday in December; and

(d) The third Tuesday in December.

(3) A person participating in a quota hunt shall:

(a) Only hunt from one-half (1/2) hour before sunrise to 2:00 p.m.;

(b) Wear hunter orange clothing pursuant to 301 KAR 2:172; and

(c) Not take more than four (4) northern bobwhite on a daily basis.

(4) A person who participates in an upland bird quota hunt:

(a) Shall not take more than four (4) grouse daily; and

(b) May take woodcock. Woodcock shall be taken pursuant to

the requirements established in 301 KAR 2:225.

(5) A person applying for a northern bobwhite or upland bird quota hunt shall:

(a) Not apply more than one (1) time for each hunt and shall not be drawn for more than one (1) hunt; and

(b) Not apply as a group of more than three (3) people.

(6) A person selected for a quota hunt shall only hunt the species identified on the permit.

Section 7. General Quota Hunt Requirements. (1) A person applying for a pheasant, northern bobwhite, or upland bird quota hunt shall:

(a) Call the toll-free number listed in the current Fall Hunting and Trapping Guide from a touch tone phone between September 1 and September 30;

(b) Enter each applicant's Social Security number;

(c) Indicate a choice of days to hunt; and

(d) Pay a three (3) dollar application fee for each applicant prior to the drawing by:

1. Check;

2. Money order;

3. Visa; or

4. MasterCard.

(2) A person, prior to participating in a quota hunt, shall be required to show:

(a) A department-issued quota hunt permit;

(b) A valid Kentucky hunting license or proof of exemption; and

(c) A hunter education card, if required.

(3) A person or group participating in a northern bobwhite or upland bird quota hunt shall submit a hunting log within seven (7) days after the hunt.

(4) A youth-mentor quota hunt party shall have a minimum of one (1) youth as a member of the party.

(5) A person shall comply with all quota hunt requirements or be ineligible to apply for any other quota hunt during the following year, except for an elk quota hunt.

(6) A youth shall only apply as part of a party that has at least one (1) adult.

(7) The department may extend the application deadline if technical difficulties with the automated application system prevent applications from being accepted for one (1) or more days during the application period.

(8) A quota hunt applicant who is not selected and applies to hunt the following year shall be given one (1) preference point for each year the applicant was not selected.

(9) A random selection of hunters with preference points shall be made for each year's quota hunts before those without preference points are chosen.

(10) A person shall forfeit all accumulated points if, in a given year, the person does not apply for the hunt in which points were earned.

Section 8. Dog Training Areas on Wildlife Management Areas. (1) A group or club may request that a dedicated dog training area be authorized by the department on a specific WMA.

(2) The department shall authorize a dog training area if:

(a) The department approves a suitable location for the dog training area; and

(b) A signed memorandum of understanding is entered into with the club or group.

(3) The conditions established in this subsection shall apply for each dog training area on a WMA.

(a) All northern bobwhite quail to be used in training shall be banded with aluminum leg bands and individually placed in the dog training area.

(b) Dog training areas shall remain open to all other legal WMA uses.

(c) A person shall comply with all dog training area requirements pursuant to 301 KAR 2:041, unless otherwise stated in the memorandum of understanding.

(d) Unleashed dogs shall be allowed within the boundaries of the dog training area year-round, except for the following days:

1. May 15 through August 15;

2. Youth statewide turkey season; and

3. Statewide turkey season.

(e) Released northern bobwhite quail with aluminum leg bands, chukars, pheasants, or pigeons may be harvested on legal dog training days.

(f) Immediately prior to dog training, a person shall:

1. Walk and examine the entire dog training area to ensure that no wild northern bobwhite quail are present; and

2. Then place released birds in the training area.

Section 9. General Requirements on Federally Owned Areas. (1) Season dates, bag limits and other requirements of 301 KAR 2:251, 2:049, and 2:050 shall apply except as otherwise established in this administrative regulation.

(2) Hunter orange requirements established in Section 3 of this administrative regulation shall apply to a person hunting or trapping on federal areas referenced in this section.

(3) A person shall:

(a) Obtain permission, in the form of area permits, before hunting;

(b) Not hunt except on assigned dates and in assigned areas; and

(c) Comply with any requirements established by the agency controlling the area.

Section 10. Exceptions on Specific Federally Owned Areas. (1) If hunting is not prohibited by other area priorities, Fort Campbell, Fort Knox, Land Between the Lakes National Recreation Area, Bluegrass Army Depot, and Reelfoot National Wildlife Refuge may allow hunting if in compliance with 301 KAR 2:122 and 2:251 for:

(a) Squirrels, from June 1 through June 14;

(b) Quail and rabbit, no earlier than November 1 nor later than the last day of February;

(c) Furbearers, no earlier than October 1 nor later than the last day of February;

(d) Frogs, year round; or

(e) Crows, for a maximum of 124 days between September 1 and the last day of February.

(2) A person shall hunt coyotes during daylight hours only on lands managed by:

(a) Daniel Boone National Forest;

(b) George Washington and Jefferson National Forests;

(c) Land Between the Lakes National Recreation Area;

(d) Clarks River National Wildlife Refuge; and

(e) Reelfoot National Wildlife Refuge.

(3) Fort Knox shall not allow more than thirty (30) days of grouse hunting between October 1 and the last day of February.

(4) On Land Between the Lakes National Recreation Area, a person hunting the species listed in this administrative regulation shall not use:

(a) Crossbows;

(b) Shotgun slugs or shot larger than BB; or

(c) Center-fire rifles or center-fire handguns, except during designated groundhog or coyote hunts.

(5) Big South Fork National River and Recreation Area.

(a) Grouse season shall be open from October 1 through December 31.

(b) Northern bobwhite and rabbit seasons shall be closed after December 31.

(c) A person hunting coyotes shall comply with any federal requirements established by the National Park Service.

Section 11. Incorporation by Reference. (1) "KDFWR Public Area Trapping Registration Form", 2015 edition, is incorporated by reference.

(2) This material may be inspected, copied, or obtained, subject to applicable copyright law, at the Department of Fish and Wildlife Resources, #1 Sportsman's Lane, Frankfort, Kentucky 40601, Monday through Friday, 8 a.m. to 4:30 p.m. Eastern time.

KAREN WALDROP, Deputy Commissioner
For GREGORY K. JOHNSON, Commissioner
ROBERT H. STEWART, Secretary
APPROVED BY AGENCY: December 10, 2014
FILED WITH LRC: December 12, 2014 at 3 p.m.

PUBLIC HEARING AND PUBLIC COMMENT PERIOD: A public hearing on this administrative regulation shall be held on January 21, 2015, at 9 a.m. at the Department of Fish and Wildlife Resources in the Commission Room of the Arnold L. Mitchell Building, #1 Sportsman's Lane, Frankfort, Kentucky. Individuals interested in attending this hearing shall notify this agency in writing by five business days prior to the hearing of their intent to attend. If no notification of intent to attend the hearing is received by that date, the hearing may be canceled. This hearing is open to the public. Any person who attends will be given an opportunity to comment on the proposed administrative regulation. A transcript of the public hearing will not be made unless a written request for a transcript is made. If you do not wish to attend the public hearing, you may submit written comments on the proposed administrative regulation through close of business February 2, 2015. Send written notification of intent to attend the public hearing or written comments on the proposed administrative regulation to:

CONTACT PERSON: Rose Mack, Department of Fish and Wildlife Resources, Arnold L. Mitchell Building, #1 Sportsman's Lane, Frankfort, Kentucky 40601, phone (502) 564-7109, ext. 4507, fax (502) 564-9136, email fwpubliccomments@ky.gov.

REGULATORY IMPACT ANALYSIS AND TIERING STATEMENT

Contact Person: Rose Mack

(1) Provide a brief summary of:

(a) What this administrative regulation does: This administrative regulation establishes exceptions to statewide hunting and trapping regulations for small game and furbearers on public land and other federally owned areas.

(b) The necessity of this administrative regulation: This administrative regulation is necessary to properly manage small game and furbearer populations, and to provide reasonable hunting and trapping opportunity on public lands.

(c) How this administrative regulation conforms to the content of the authorizing statutes: KRS 150.025(1) authorizes the Department to promulgate administrative regulations establishing open seasons for the taking of wildlife, to regulate bag limits, and to make these requirements apply to a limited area. KRS 150.175 (7), (9) authorizes the department to issues licenses, permits, and tags for hunting and trapping. KRS 150.360 requires restrictions on the taking of wildlife and authorizes the department to promulgate administrative regulations establishing the requirements for hunting coyotes at night. KRS 150.400 authorizes the department to establish the types of traps that can legally be used by trappers. KRS 150.410 authorizes the department to regulate trap tags, trap visitation, and trap placement to protect domestic animals. KRS 150.620 authorizes the department to promulgate administrative regulations for the maintenance and operation of lands it has acquired for public recreation.

(d) How this administrative regulation currently assists or will assist in the effective administration of the statutes: This administrative regulation will assist in administering the above statutes by defining exceptions to the statewide seasons, bag limits, and methods used to hunt and trap small game and furbearers on public lands in Kentucky.

(2) If this is an amendment to an existing administrative regulation, provide a brief summary of:

(a) How the amendment will change this existing administrative regulation: This amendment establishes smaller size restrictions on dry land body-gripping traps used on public lands, and establishes a standard means of registration for persons trapping on department-owned or operated Wildlife Management Areas and Outdoor Recreation Areas. This amendment allows a person to hunt coyotes after daylight hours on Robinson Forest WMA. In addition, this amendment restricts coyote hunting on Redbird WMA to daylight hours only. It also contains modifications to conform with administrative regulation style requirements.

(b) The necessity of the amendment to this existing administrative regulation:

(c) How the amendment conforms to the content of the authorizing statutes: See (1)(c) above.

(d) How the amendment will assist in the effective administration of the statutes: See (1)(d) above.

(3) List the type and number of individuals, businesses, organizations, or state and local governments affected by this administrative regulation: All those who hunt or trap furbearers will be affected by this regulatory amendment. The Department sold 3,390 trapping licenses during the 2013-14 license year. Those individuals who hunt furbearers on public lands would also be affected, but that number is unknown.

(4) Provide an analysis of how the entities identified in question (3) will be impacted by either the implementation of this administrative regulation, if new, or by the change, if it is an amendment, including:

(a) List the actions that each of the regulated entities identified in question (3) will have to take to comply with this administrative regulation or amendment: A trapper using body-gripping traps on a Wildlife Management Area or Outdoor Recreation Area shall now be restricted to the use of traps that are no larger than the standard 110 conibear-type trap when trapping on dry land. In addition, all persons must submit to the department a completed KDFWR Public Area Trapping Registration Form before trapping on Wildlife Management Areas or Outdoor Recreation Areas. In addition, coyotes may now be hunted after daylight hours on Robinson Forest WMA and only during daylight hours on Redbird WMA.

(b) In complying with this administrative regulation or amendment, how much will it cost each of the entities identified in question (3): There will be no direct cost to hunters and trappers as a result of this amendment to the administrative regulation.

(c) As a result of compliance, what benefits will accrue to the entities identified in question (3): New restrictions for body-gripping traps on public lands will minimize potential for the capture of non-target species. Trapper registration on public lands will allow the department to estimate trapping pressure on department WMAs and Outdoor Recreation Areas.

(5) Provide an estimate of how much it will cost the administrative body to implement this administrative regulation:

(a) Initially: There will be no administrative cost to the department to implement this administrative regulation.

(b) On a continuing basis: There will be no cost to the department on a continuing basis.

(6) What is the source of the funding to be used for the implementation and enforcement of this administrative regulation: The source of funding is the State Game and Fish Fund.

(7) Provide an assessment of whether an increase in fees or funding will be necessary to implement this administrative regulation, if new, or by the change if it is an amendment. It will not be necessary to increase any other fees or to increase funding to implement this administrative regulation.

(8) State whether or not this administrative regulation established any fees or directly or indirectly increased any fees: No fees established.

(9) TIERING: Is tiering applied? No. Tiering was not applied because all furbearer hunters and trappers in Kentucky must abide by the same seasons, methods of take, bag limits, harvest recording procedures, and checking requirements.

FISCAL NOTE ON STATE OR LOCAL GOVERNMENT

(1) What units, parts, or divisions of state or local government (including cities, counties, fire departments, or school districts) will be impacted by this administrative regulation? The Department of Fish and Wildlife Resources Divisions of Wildlife and Law Enforcement will be impacted by this administrative regulation.

(2) Identify each state or federal statute or federal regulation that requires or authorizes the action taken by the administrative regulation. 150.025(1), 150.175(7), (9), 150.360, 150.400, 150.410, 150.620.

(3) Estimate the effect of this administrative regulation on the expenditures and revenues of a state or local government agency

(including cities, counties, fire departments, or school districts) for the first full year the administrative regulation is to be in effect.

(a) How much revenue will this administrative regulation generate for the state or local government (including cities, counties, fire departments, or school districts) for the first year? No additional revenue is expected to be generated by this administrative regulation during the first year.

(b) How much revenue will this administrative regulation generate for the state or local government (including cities, counties, fire departments, or school districts) for subsequent years? The amount of revenue generated by this administrative regulation for subsequent years is expected to be stable to slightly increasing.

(c) How much will it cost to administer this program for the first year? There will be no administrative cost to administer this program for the first year.

(d) How much will it cost to administer this program for subsequent years? There will be no administrative costs incurred in subsequent years.

Note: If specific dollar estimates cannot be determined, provide a brief narrative to explain the fiscal impact of the administrative regulation.

Revenues (+/-): None.

Expenditures (+/-): None.

Other Explanation:

CABINET FOR HEALTH AND FAMILY SERVICES
Department for Income Support
Child Support Enforcement
(Amendment)

921 KAR 1:410. Child support collection and enforcement.

RELATES TO: KRS 13B.010(2), 15.055, 67A.620, 95.620(1), 95.878, 131.570, 161.700(1), 186.570(2), 205.594, 205.595, 205.7685, 205.710-205.802, 237.110(4), 403.211-403.215, 405.060(2), (3), 405.405-405.991, 407.5101-407.5902, 427.120, 427.125, 31 C.F.R. 285.1 and, 285.3, 45 C.F.R. 302.32-302.36, 302.60-302.80, 303.3, 303.6, 303.31, 303.32, 303.35, 303.70, 303.72, 303.100-303.102, 303.104, 15 U.S.C. 1673, 42 U.S.C. 652, 654, 659, 664, 666(a)(1)-(4), (6)-(12), (14)- (19), (b), and, (c)

STATUTORY AUTHORITY: KRS 15.055(2), 186.570(2), 194A.050(1), 205.712(2)(o), 205.712(16), 205.745(9), 205.7685(3), 205.795, 405.411(2), 405.520, 42 U.S.C. 652, 653, 654, 656, 659, 666(a), (b), and, (c), 669A

NECESSITY, FUNCTION, AND CONFORMITY: KRS 194A.050(1) requires the secretary to promulgate administrative regulations necessary to implement programs mandated by federal law or to qualify for the receipt of federal funds and necessary to cooperate with other state and federal agencies for the proper administration of the cabinet and its programs. 42 U.S.C. 666 requires states to have laws that prescribe procedures to improve effectiveness of child support enforcement. KRS 205.712(2)(o) requires the Cabinet for Health and Family Services to collect and enforce child support obligations and authorizes the cabinet to promulgate administrative regulations to implement its duties. This administrative regulation establishes procedures for collection and enforcement of child support.

Section 1. Definitions. "Lump sum payment of any kind" means a lump sum payment of earnings as defined in KRS 427.005.

Section 2. Collection. (1) Income withholding shall be used for the collection of a support obligation or health insurance coverage in an order being enforced by the Child Support Enforcement (CSE) program.

(2) The cabinet shall issue[~~notify an employer or other income source of a request for income withholding by sending, certified mail, returned receipt requested,~~] the CS-89, Income Withholding for Support[,] and CS-72, National Medical Support Notice to an employer or other income source:

(a) Within fifteen (15) calendar days of a request for income withholding; or

(b) Within two (2) working days after entry of an obligor into the State Directory of New Hires.

(3) The employer or other income source shall:

(a) Implement income withholding no later than the first pay period that occurs after fourteen (14) working days following the date of the CS-89; and

(b) Transfer the CS-72 to the employer's health plan administrator within twenty (20) business days after receipt of the notice.

(4) The employer or other income source, in accordance with KRS 405.465(4) and (6)(a), may deduct the sum of one (1) dollar for each payment made pursuant to the order.

(5) The total amount to be withheld shall not exceed the maximum amount allowed under 15 U.S.C. 1673(b).

(6) In the case of an initial withholding, the cabinet shall send the obligor a copy of the CS-89 in order to notify the obligor that the income withholding:

(a) May be contested by requesting an administrative hearing pursuant to 921 KAR 1:430, in accordance with KRS 405.467(4); and

(b) Shall apply to the current and any subsequent employer.

(7) The health plan administrator shall notify the obligor and the cabinet of the health insurance coverage within forty (40) working days of receipt of the CS-72.

(8) If an obligor terminates employment, the employer or other income source shall notify the cabinet of the obligor's last known address and name of the new employer, if known, in accordance with KRS 405.465(5).

(9) An obligor shall inform the cabinet of any changes in:

(a) A current employer or source of income;

(b) Access to health insurance; and

(c) Residential or mailing address.

(10) If an obligor transfers or assigns income or income-producing property after receipt of notification of a child support obligation, the cabinet shall take action pursuant to KRS 405.060.

(11) If an arrearage only amount is subject to withholding, the arrearage payment and frequency of payment shall be equal to the payment and frequency last designated by court or administrative order.

(12) The employer or other income source shall forward:

(a) The support obligation payment to the state disbursement unit in the child support agency within seven (7) working days from the date an amount is withheld; or

(b) The medical insurance premium to the health insurance carrier or notify the cabinet prior to payment if more than one (1) option is available under a plan within twenty (20) business days.

(13) The employer or other income source shall include on the transmittal to the cabinet the obligor's:

(a) Name;

(b) Social Security number; and

(c) Cabinet-assigned identification number.

(14) The employer or other source of income shall not be required to change payroll frequency but shall withhold:

(a) At least once monthly; and

(b) May combine withheld amounts from more than one (1) obligor's income in a single payment to the cabinet, if the amount attributable to each obligor is identified by:

1. Name;

2. Social Security number; and

3. Cabinet-assigned identification number.

(15) (a) An employer with twenty (20) or more employees shall provide written notification of a lump sum payment of any kind of $150 or more to be made to an employee who is currently under an income withholding order, in accordance with KRS 405.465.

1. The written notice to the cabinet shall include the following:

a. Name of the employee;

b. Social Security number of the employee;

c. Amount of the lump sum payment; and

d. Intended payment date.

2. The notice may include multiple employees on one (1) written notification if the information in accordance with this subparagraph 1 of this paragraph is provided for each employee.

(b) Upon receipt of notification of a lump sum payment, Child Support Enforcement shall determine if the employee owes an arrearage on a support obligation enforced by the cabinet.

(c) If the employee owes no arrearage, Child Support Enforcement or its designee may notify the employer to release the lump sum payment to the employee.

(d) If the employee owes an arrearage, pursuant to paragraph (b) of this subsection, Child Support Enforcement or its designee shall initiate:

1. A court order to the employer in accordance with KRS 405.465; or

2. An administrative order in accordance with KRS 405.470.

(e) If Child Support Enforcement or its designee does not contact the employer, the employer shall:

1. Hold the lump sum for thirty (30) calendar days, in accordance with KRS 405.465(6)(a), from the projected date of its release; and

2. Release the lump sum payment to the employee after the 30th calendar day, unless the employer has received from Child Support Enforcement or its designee a court order or an administrative order to withhold any portion of the lump sum payment.

(16) If an obligor receives unemployment compensation benefits, the cabinet shall:

(a) Through an agreement with the Education Cabinet, Office of Employment and Training, submit a CS-76, Unemployment Insurance Notice of Withholding, to the Department of Unemployment Insurance within the Education Cabinet to collect a child support payment from an obligor receiving unemployment compensation.

(b) Notify an obligor with a CS-73, Unemployment Insurance Letter, along with a copy of the CS-76, Unemployment Insurance Notice of Withholding that:

1. Current child support obligation or delinquency is owed;

2. The cabinet has completed a CS-76 to order withholding of:

a. Fifty (50) percent of the unemployment benefit; or

b. The amount of the assigned support obligation, whichever is less; and

3. The obligor may contest the withholding by requesting an administrative hearing as specified in 921 KAR 1:430.

Section 3. Support Collection by Methods Other than Collection through Income Withholding. (1) Federal income tax refund offset and federal administrative offset.

(a) A public assistance case shall qualify for offset if there is:

1. A court-ordered or administratively-established support obligation;

2. An assignment of support to the cabinet;

3. An arrearage of at least $150; and

4. Cabinet verification of the accuracy of the obligor's name and Social Security number.

(b) A nonpublic assistance case, for which the cabinet is providing services, involving past-due child support, a specific dollar amount of medical support, or spousal support shall qualify for offset if the:

1. Cabinet is enforcing a court-ordered or administratively-established support obligation;

2. Cabinet verifies accuracy of the obligor's name and Social Security number;

3. Nonpublic assistance arrearage owed is equal to or greater than $500, exclusive of fees, court costs, or other non-child support debt; and

4. Cabinet has the following:

a. A copy of the current support order;

b. A copy of the payment record; and

c. The custodial parent's last known address.

(c)1. If a case is submitted for federal tax refund offset, the case may be subject to federal administrative offset of nonexempt federal payments pursuant to 42 U.S.C. 664 and 31 C.F.R. 285.1 and 285.3.

2. Nonexempt federal payments shall be denied to individuals owing a child support arrearage as defined in paragraphs (a) and (b) of this subsection.

(d) An Advance Notice of Intent to Collect Past Due Support, Form CS-122, shall be sent to the obligor of the intent to intercept the tax refund and the administrative offset to be applied to the obligor's account. The notice shall inform noncustodial parents:

1. Of their right to contest the fact that past due support is owed or the amount of past due support by requesting an administrative hearing;

2. Of the procedures and timeframe for contacting CSE to request an administrative hearing;

3. That the hearing shall be conducted by the submitting state unless the noncustodial parent requests the hearing be conducted by the state with the order upon which the referral for offset is based; and

4. That, in the case of a joint return, the Secretary of the U.S. Treasury shall notify the noncustodial parent's spouse at the time of offset regarding the steps to take to protect the share of the refund which may be payable to that spouse.

(2) State income tax refund offset.

(a) A public assistance case and nonpublic assistance case shall qualify for offset if there is:

1. A court-ordered or administratively-established support obligation;

2. An assignment of support to the cabinet or the Child Support Enforcement program is providing services involving past due child support, a specific dollar amount of medical support, or spousal support;

3. An arrearage of at least $150; and

4. Cabinet verification of the accuracy of the obligor's name and Social Security number.

(b) In accordance with KRS 131.570, an advance written notice shall be sent to the obligor that he may contest the accuracy of a past due amount by requesting an administrative hearing as specified in 921 KAR 1:430.

(3) Tort claim settlements and state administrative offset. The cabinet shall:

(a) Identify a child support case for state administrative offset, including tort claim settlements, if a child support case meets the criteria specified in subsection (2)(a) or (b) of this section; and

(b) Notify the Finance and Administration Cabinet to offset administrative payments, including tort claim settlements, in accordance with KRS 205.712(17), for a case identified in paragraph (a) of this subsection.

(4) Financial Institution Data Match (FIDM). The cabinet shall:

(a) Use the following criteria to identify a case for seizure of assets:

1.a. Assignment of support is made to the cabinet; or

b. Child Support Enforcement program is providing support services; and

2. The obligor owes past-due support in an amount equal to or greater than one (1) month's support obligation;

(b) Issue a CS-68, Order to Withhold and Deliver, and CS-69, Answer to Withhold and Deliver, to a financial institution holding the obligor's account or accounts;

(c) Issue a CS-68 and CS-121, Noncustodial Parent's Answer to Withhold and Deliver, to the obligor within two (2) working days:

1. After both of the forms specified in paragraph (b) of this subsection are issued to the financial institution; and

2. To notify the obligor that the funds in the account with the financial institution may be retained by requesting an administrative hearing to contest the Order to Withhold and Deliver in accordance with 921 KAR 1:430;

(d) Notify an obligor that to retain the funds in the account with the financial institution, an obligor shall take one (1) of the following actions within twenty (20) calendar days from the date of receipt of a CS-68:

1. Pay the total arrearage;

2. Request and administrative hearing to contest the CS-68; or

3. Post a bond satisfactory to the cabinet; and

(e) After an administrative hearing, if a case does not qualify for the withhold and deliver process, send a CS-70, Release of Order to Withhold and Deliver to:

1. The obligor; and

2. The financial institution.

(5) If a seizure of assets request is identified, as specified in subsection (4)(a) of this section, and is initiated from outside the commonwealth as a result of a FIDM, pursuant to 42 U.S.C. 666(a)(17), the cabinet shall comply with KRS 205.712, 407.5305, and 407.5507 to issue:

(a) A CS-68 and a CS-69 to a financial institution holding the obligor's account or accounts;

(b) A CS-68 and a CS-121, Noncustodial Parent's Answer to Withhold and Deliver, to the obligor within two (2) working days after both of the forms specified in paragraph (a) of this subsection are issued to the financial institution; and

(c) A CS-70 to the financial institution. if the initiating state's request is withdrawn.

Section 4. Enforcement Actions. (1) Liens.

(a) The cabinet shall file a lien on an obligor's interest in personal or real property, in accordance with KRS 205.745, if:

1. The obligor owes an arrearage equal to or greater than one (1) month's obligation;

2. The child support has been assigned to the cabinet;

3. The property has been identified and located; and

4. The value of the property exceeds the costs related to filing the lien.

(b) To file a lien, the cabinet shall.

1. Issue a CS-85, Notice of Lien, for property within or outside Kentucky in accordance with KRS 205.745 or 205.7785; and

2. Provide a CS-119, Noncustodial Parent's Notice of Lien, along with a copy of the CS-85 to the obligor notifying him that:

a. The obligor may contest the lien as specified in 921 KAR 1:430;

b. A transfer of property in order to avoid payment shall be considered an act of fraud, in accordance with KRS 405.060(2); and

c. If the obligor makes full payment of the arrearage, including interest, penalties, and fees, a CS-120, Release of Lien, shall be provided to the obligor.

(c) To release a lien, the cabinet shall provide a CS-120, Release of Lien, to the obligor.

(2) License and certificate denial, suspension, or revocation.

(a) If an obligor owes an arrearage equal to or greater than six (6) months of an assigned support obligation or fails to comply with a subpoena or warrant relating to paternity or child support proceedings, as established in KRS 205.712(9):

1. The cabinet shall forward the name of the individual to a board of licensure or board of certification for the notification of the denial, revocation, or suspension of a driver's license, professional license or certification, occupational license or certification, recreational license, or sporting license.

2. The denial or suspension shall remain in effect until:

a. The obligor makes full payment of the arrears;

b. Payments on the past due child support are made in accordance with a court order, an administrative order, or Payment Agreement, CS-78;

c. The obligor complies with the subpoena or a warrant relating to paternity or child support proceedings has been removed;

d. The obligor provides supporting documentation of extenuating circumstances that is accepted by the cabinet; or

e. The appeal of the denial or suspension is upheld and the license is reinstated.

3. The cabinet shall send to the obligor a CS-44, Notice of Intent to Request Denial or Suspension, which includes:

a. A section for an Answer to Notice of Intent providing the obligor with notice of the obligor's right to request an administrative hearing contesting the action as specified in 921 KAR 1:430; and

b. Notification that the CS-63, Notice to Licensing/Certification Board or Agency shall be rescinded if an action specified in paragraph (a)2 of this subsection has been taken.

4. The cabinet shall send to the issuing agency or board of licensure or certification a CS-63, if an action in paragraph (a)2 of this subsection has not been taken.

5. The cabinet shall send to the issuing agency or board of licensure or certification a CS-63, within twenty (20) calendar days of the date of administrative hearing decision, if an administrative hearing results in a finding that the case qualifies for:

a. A license or certificate denial;

b. Suspension; or

c. Revocation.

6. The cabinet shall notify the issuing board or agency that the obligor is no longer subject to denial, suspension, or revocation, if the obligor, in accordance with KRS 205.712(11):

a. Has eliminated the child support arrearage;

b. Is making payments on the child support arrearage in accordance with a court or administrative order; or

c. Complies with a subpoena or warrant relating to paternity or child support proceedings.

(b) If an obligor owes an arrearage equal to or greater than one (1) year's obligation, the cabinet shall take action against a license to carry a concealed deadly weapon as specified in KRS 237.110(4).

(3) Vehicle booting.

(a) If an obligor owes an arrearage equal to or greater than six (6) months obligation of an assigned support obligation and fails to comply with a subpoena or warrant relating to a child support proceeding, the cabinet may enforce a lien on a vehicle registered to the obligor by immobilization with a vehicle boot as established in KRS 205.745(9).

(b) The cabinet shall:

1. Verify with the Department of Vehicle Regulation that the vehicle identification number for the vehicle to be booted is register in the obligor's name;

2. Verify the vehicle to be booted is solely owned by the obligor, co-owned by the obligor and current spouse, or owned by a business in which the obligor is the sole proprietor;

3. Send a notice of intent to the obligor, unless there is reason to believe that the obligor will leave town or hide the vehicle;

4. File a lien in the county where the vehicle is kept; and

5. Set a target date for booting the vehicle, if the obligor does not contact the cabinet within ten (10) days of notice to negotiate a settlement.

(c) The cabinet shall send a cancellation notice to the obligor and to the appropriate local law enforcement personnel to terminate the booting of the vehicle.

(4) Newspaper publication of a list of delinquent obligors. If an obligor owes an arrearage equal to or greater than six (6) months of an assigned support obligation or fails to comply with a subpoena or warrant relating to paternity or child support proceedings, as established in KRS 405.411, a cabinet designee under 205.712(6) may:

(a) Compile and furnish a list to a newspaper of general circulation in that county for publication; and

(b) Include the name, last known address, and the past due amount owed by the obligor.

(5) Passport denial, revocation, or limitation. If the obligor owes an arrearage of $2,500 or more, in accordance with 42. U.S.C. 652 and 654(31), the cabinet shall:

(a)1. Provide the Advance Notice to Collect Past due Support, CS-122, to the obligor of the determination to be referred for passport denial, revocation, or limitation; and

2. Include in the notice the consequences of the referral and the right to contest the action by requesting a hearing in accordance with KRS 205.712(8);

(b) Provide the U.S. Secretary of Health and Human Services the names of individuals and supporting documentation for the denial, revocation, or limitation of the obligor's passport; and

(c) Notify the Secretary of the U.S. Department of Health and Human Services that the cabinet requests the release of the passport of an obligor that had been denied if any of the following criteria are met:

1. There was an erroneous submittal of a Social Security number;

2. There is a case of mistaken identity and the cabinet has verified this information;

3. The obligor is required to pay the past due support in full;

4. The obligor provides documentation on company letterhead verifying travel for employment or business purposes and makes alternate payment arrangements acceptable to the cabinet; or

5. There are extenuating circumstances in which the reason for travel is a family emergency and supporting documentation is provided to and accepted by the cabinet.

(6) Delinquent list.

(a) The cabinet shall provide to the Office of the Attorney General a list of names of delinquent obligors for publication on the Internet, as established in KRS 15.055 and 205.712(16).

(b) The cabinet shall send the obligor meeting the criteria in 40 KAR 1:080 a CS-175, Notice of Intent to Place Noncustodial Parent's Name on Delinquent Listing notifying him of his right to contest by requesting a hearing.

(7) Consumer Reporting Agency (CRA). Prior to requesting information from a CRA for enforcement purposes and when the obligor has not provided written consent for CSE to request information from a CRA, the cabinet shall notify the obligor:

(a) By sending a CS-93, Advanced Notice of Intent to Request Full Credit Report; and

(b) In accordance with KRS 205.7685(2).

Section 5. Incorporation by Reference. (1) The following material is incorporated by reference:

(a) "CS-44 Notice of Intent to Request Denial or Suspension",[~~edition~~] 9/10;

(b) "CS-63 Notice to Licensing/Certification Board or Agency",[~~edition~~] 9/10;

(c) "CS-68 Order to Withhold and Deliver",[~~edition~~] 9/10;

(d) "CS-69 Answer to Withhold and Deliver",[~~edition~~] 9/10;

(e) "CS-70 Release of Order to Withhold and Deliver",[~~edition~~] 9/10;

(f) "CS-72 National Medical Support Notice", 2/15[~~edition 10/12~~];

(g) "CS-73 Unemployment Insurance Letter",[~~edition~~] 9/10;

(h) "CS-76 Unemployment Insurance Notice of Withholding",[~~edition~~] 9/10;

(i) "CS-78 Payment Agreement",[~~edition~~] 9/10;

(j) "CS-85 Notice of Lien",[~~edition~~] 10/12;

(k) "CS-89 Income Withholding for Support", 2/15[~~edition 10/12~~];

(l) "CS-93 Notice of Intent to Request Full Credit Report", 8/14;

(m) "CS-119 Noncustodial Parent's Notice of Lien",[~~edition~~] 9/10;

(n)[~~(m)~~] "CS-120 Notice to Release[~~of~~] Lien",[~~edition~~] 9/10;

(o)[~~(n)~~] "CS-121 Noncustodial Parent's Answer to Withhold and Deliver",[~~edition~~] 9/10;

(p)[~~(o)~~] "CS-122 Advance Notice of Intent to Collect Past-Due Support",[~~edition~~] 10/12; and

(q)[~~(p)~~] "CS-175 Notice of Intent to Place Noncustodial Parent's Name on Delinquent Listing",[~~edition~~] 4/09.

(2) This material may be inspected, copied, or obtained, subject to applicable copyright law, at the Department for Income Support, Child Support Enforcement, 730 Schenkel Lane, Frankfort, Kentucky 40601, Monday through Friday, 8 a.m. to 4:30 p.m.

STEVEN P. VENO, Commissioner
AUDREY TAYSE HAYNES, Secretary

APPROVED BY AGENCY: December 10, 2014

FILED WITH LRC: December 11, 2014 at 3 p.m.

PUBLIC HEARING AND PUBLIC COMMENT PERIOD: A public hearing on this administrative regulation shall be held on January 21, 2015, at 9:00 a.m. in the Cabinet for Health and Family Services Auditorium, Health Services Building, 275 East Main Street, Frankfort, Kentucky. Individuals interested in being heard at this hearing shall notify this agency in writing by January 14, 2015, five workdays prior to the hearing, of their intent to attend. If no notification of intent to attend the hearing is received by that date, the hearing may be canceled. The hearing is open to the public. Any person who wishes to be heard will be given an opportunity to comment on the proposed administrative regulation. A transcript of the public hearing will not be made unless a written request for a transcript is made. If you do not wish to be heard at the public hearing, you may submit written comments on the proposed administrative regulation. Written comments shall be accepted until close of business February 2, 2015. Send written notification of intent to be heard at the public hearing or written comments to:

CONTACT PERSON: Tricia Orme, Office of Legal Services, 275 East Main Street 5 W-B, Frankfort, Kentucky 40621, phone 502-564-7905, fax 502-564-7573, email tricia.orme@ky.gov.

REGULATORY IMPACT ANALYSIS AND TIERING STATEMENT

Contact person: Mary W. Sparrow

(1) Provide a brief summary of:

(a) What this administrative regulation does: This administrative regulation establishes procedures for the collection and enforcement of child support.

(b) The necessity of this administrative regulation: This administrative regulation is necessary to carry out the duties of collecting and enforcing child support orders mandated by state and federal law.

(c) How this administrative regulation conforms to the content of the authorizing statutes: The cabinet has responsibility under KRS 15.055(2), 194A.050(1), 205.712(2)(o), 205.712(16), 205.745(9), 205.7685(3), 205.795, 405.411(2), 405.520, and by virtue of applying for federal funds under 42 U.S.C. 654, 659, 666 to establish procedures to collect and enforce child support obligations for recipients of IV-A, IV-E, Title XIX, and individuals who apply for IV-D services. This administrative regulation sets forth such procedures and processes.

(d) How this administrative regulation currently assists or will assist in the effective administration of the statutes: This administrative regulation, through processes and procedures outlined in the regulation and updated forms incorporated within the regulation, will assist in the effective collection and enforcement of child support.

(2) If this is an amendment to an existing administrative regulation, provide a brief summary of:

(a) How the amendment will change this existing administrative regulation: CSE has updated the CS-72, which is Kentucky's replica of the federal National Medical Support Notice form and the CS-89, Kentucky's replica of the federal Income Withholding for Support form to match the changes made by the federal government. The Consumer Reporting Agency (CRA) information and the CS-93, Advance Notice of Intent to Request Full Credit Report, have been added to this regulation as this process is used by the Child Support Enforcement (CSE) program for child support enforcement purposes. The CRA information and CS-93 will be subsequently removed from 921 KAR 1:400 (Establishment, review and modification of child support and medical support orders).

(b) The necessity of the amendment to this administrative regulation: This amendment is necessary to update the forms and add the CRA information as outlined in (a).

(c) How the amendment conforms to the content of the authorizing statutes: The amendment conforms to the authorizing statutes by outlining the processes utilized by the Child Support Enforcement Program in the collection and enforcement of child support.

(d) How the amendment will assist in the effective administration of the statutes: This amendment will assist in the effective administration of the authorizing statutes through its updates to child support forms incorporated by reference in this regulation. Adding the CRA information allows all enforcement processes utilized by the Child Support Enforcement program to be in one regulation.

(3) List the type and number of individuals, businesses, organizations, or state and local government affected by this administrative regulation: This regulation affects the entities that are required to withhold earnings/income or provide medical support for a child (any employer within or outside of Kentucky who employs an individual who owes a child support obligation as well as financial institutions within or outside of Kentucky), Contracting Officials, Child Support Enforcement (CSE) Programs, noncustodial parents, and custodial parents and their children. Obligors will be provided advanced notice when CSE is requesting their full credit report.

(4) Provide an analysis of how the entities identified in question (3) will be impacted by either the implementation of this administrative regulation, if new, or by the change, if it is an amendment, including:

(a) List the actions that each of the regulated entities identified in question (3) will have to take to comply with this administrative regulation or amendment: There will be no new responsibilities added to those that currently exist for any individual, business, organization, or state and local government.

(b) In complying with this administrative regulation or amendment, how much will it cost each of the entities identified in question (3). There are no new costs for the entities involved to comply with this amendment.

(c) As a result of compliance, what benefits will accrue to the entities identified in question (3). The federal revisions to the CS-72 will assist to streamline the process that an employer of the noncustodial parent will follow to enroll the children in the employer sponsored health insurance. The revisions to the CS-89 will continue to streamline the income withholding process for employers of noncustodial parents. Adding the CRA information to this regulation allows all child support enforcement remedies to be in one regulation.

(5) Provide an estimate of how much it will cost to implement this administrative regulation:

(a) Initially: No additional funds will be necessary to implement the amendment to this administrative regulation.

(b) On a continuing basis: No additional funds will be necessary to implement the amendment to this administrative regulation.

(6) What is the source of the funding to be used for the implementation and enforcement of this administrative regulation: Federal funds from The Child Support Enforcement State Program under Title IV-D of the Social Security Act support the implementation and enforcement of this administrative regulation. State General Funds are also utilized.

(7) Provide an assessment of whether an increase in fees or funding will be necessary to implement this administrative regulation, if new or by the change if it is an amendment. Neither an increase in fees nor funding is necessary to implement this administrative regulation.

(8) State whether or not this administrative regulation establishes any fees or directly or indirectly increases any fees: This administrative regulation neither establishes nor increases any fees.

(9) Tiering: Is tiering applied? Tiering is not applied, as this administrative regulation is applied in a like manner statewide.

FEDERAL MANDATE ANALYSIS COMPARISON

1. Federal statute or regulation constituting the federal mandate. 45 Code of Federal Regulations 302.60, 302.65, 302.80, 303.30, 303.31, 303.32, 303.71, 303.72, 303.100, 303.102, 303.104 and 303.108.

2. State compliance standards. Kentucky Revised Statutes 186.570, 205.710, 205.712, 205.745, 205.7685, 205.769, 205.772, 205.776, 205.7785, 237.110, 341.392, 403.215, 405.465, 405.467 and 405.991.

3. Minimum or uniform standards contained in the federal mandate. 42 U.S.C. 666 and 45 C.F.R. 303.35.

4. Will this administrative regulation impose stricter requirements, or additional or different responsibilities or requirements, than those required by the federal mandate? This administrative regulation does not impose stricter, additional, or different requirements or responsibilities than those required by the federal mandate.

5. Justification for the imposition of the stricter standard, or additional or different responsibilities or requirements. This administrative regulation does not impose stricter, additional, or different requirements or responsibilities than those required by the federal mandate.

FISCAL NOTE ON STATE OR LOCAL GOVERNMENT

1. What units, parts or divisions of state or local government (including cities, counties, fire departments, or school districts) will be impacted by this administrative regulation? The Cabinet for Health and Family Services and the Department for Income Support, Child Support Enforcement Program are impacted by this administrative regulation.

2. Identify each state or federal regulation that requires or authorizes the action taken by the administrative regulation. 45 Code of Federal Regulations 302.60, 302.65, 302.80, 303.30, 303.31, 303.32, 303.71, 303.72, 303.100, 303.102, 303.1047 and 303.108 and KRS 186.570, 205.710, 205.712, 205.745, 205.7685, 205.769, 205.772, 205.776, 205.7785, 237.110, 341.392, 403.215, 405.465, 405.467 and 405.991.

3. Estimate the effect of this administrative regulation on the expenditures and revenues of a state or local government agency (including cities, counties, fire departments, or school districts) for the first full year the administrative regulation is to be in effect.

(a) How much revenue will this administrative regulation generate for the state or local government (including cities, counties, fire departments, or school districts) for the first year? This administrative regulation will not generate additional revenue during the first
year.

(b) How much revenue will this administrative regulation generate for the state or local government (including cities, counties, fire departments, or school districts) for subsequent years? This administrative regulation will not generate additional revenue in subsequent years.

(c) How much will it cost to administer this program for the first year? No additional funds will be necessary to implement this administrative regulation in the first year.

(d) How much will it cost to administer this program for subsequent years? No additional funds will be necessary to implement this administrative regulation in subsequent years.

Note: If specific dollar estimates cannot be determined, provide a brief narrative to explain the fiscal impact of the administrative regulation.

Revenues (+/-):
Expenditures (+/-):
Other Explanation:

CABINET FOR HEALTH AND FAMILY SERVICES
Department for Community Based Services
Division of Family Support
(Amendment)

921 KAR 3:030. Application process.

RELATES TO: KRS 116.048, 7 C.F.R. 273.2, 273.10, 7 U.S.C. 2020(e)(2)(B)(ii), (iii), (iv), 42 U.S.C. 1973gg-5, 2000d, Pres. EO 13166

STATUTORY AUTHORITY: KRS 116.048(1), 194A.050(1), 7 C.F.R. 271.4, 7 U.S.C. 2020(e)(2)(B), 7 U.S.C. 2011-2029, 42 U.S.C. 1973gg-5

NECESSITY, FUNCTION, AND CONFORMITY: KRS 194A.050(1) requires the secretary of the Cabinet for Health and Family Services to promulgate administrative regulations necessary to implement programs mandated by federal law or to qualify for the receipt of federal funds and necessary to cooperate with other state and federal agencies for the proper administration of the cabinet and its programs. 7 U.S.C. 2011 to 2029 and 7 C.F.R. 271.4 authorize the cabinet to administer a Supplemental Nutrition Assistance Program (SNAP) and prescribes the manner in which the program shall be implemented. 7 U.S.C. 2020(e)(2)(B) requires the cabinet to develop a uniform application process. KRS 116.048(1) designates the cabinet as a voter registration agency in accordance with 42 U.S.C. 1973gg-5. This administrative regulation establishes the application and the voter registration processes used by the cabinet in the administration of the SNAP.

Section 1. Right to Apply or Reapply. (1) An individual shall have the right to apply or reapply for SNAP benefits on the same

day that the household first contacts the Department for Community Based Services (DCBS) office in person during office hours.

(2) The cabinet shall make the application process readily accessible to a household.

(3) In accordance with the procedures described in 920 KAR 1:070, interpreter services shall be provided for a person who is:

(a) Deaf; or

(b) Hard of hearing.

(4) In accordance with 42 U.S.C. 2000d and Presidential EO 13166, interpreter services shall be provided for a person who is Limited English Proficient.

(5) An application shall be considered filed if:

(a) A FS-1, Application for SNAP, containing the name, address, and signature of the applicant is received by a DCBS office; or

(b) Application for benefits and another public assistance program is made in accordance with 921 KAR 2:040 and Section 6 of this administrative regulation.

(6) An application shall be processed after the:

(a) Applicant or representative is interviewed;

(b) Required information and verification for the application is provided to the DCBS office; and

(c) Application and related documents are received by the DCBS office, as specified in Section 3(1) of this administrative regulation.

Section 2. Who May Sign an Application. An application for SNAP shall be signed by:

(1) An adult or emancipated child who is a responsible member of the household; or

(2) The household's authorized representative.

Section 3. Where an Application is Filed. (1) Except as provided in subsection (2) of this section, an application shall be filed in any DCBS office.

(2) A concurrent application for Supplemental Security Income (SSI) and SNAP shall be filed in the service area office of the Social Security Administration.

Section 4. Prompt Action on an Application. The cabinet shall provide an eligible household that completes the initial SNAP application process an opportunity to participate as soon as possible. The cabinet shall not provide an opportunity to participate later than:

(1) Thirty (30) days after the application is filed for a household ineligible for expedited services; or

(2) The fifth calendar day following the date an application is filed for a household eligible for expedited services.

Section 5. Expedited Service. The cabinet shall provide expedited services to a household that is eligible in accordance with 7 C.F.R. 273.2(i).

Section 6. Public Assistance Application Process. (1) A household in which every member is applying for Kentucky Transitional Assistance Program (KTAP) shall be allowed to simultaneously apply for SNAP benefits. A single interview shall be conducted for both programs.

(2) Time standards specified in Section 4 of this administrative regulation shall not apply to a public assistance application. A public assistance application shall be governed by the time standards specified in 921 KAR 2:035, Section 3.

(3) A household in which every member receives, or is authorized to receive, SSI shall be considered categorically eligible unless:

(a) The entire household is institutionalized;

(b) A household member is ineligible due to a drug-related felony conviction;

(c) A household member is disqualified due to an intentional program violation specified in 921 KAR 3:010; or

(d) The head of the household is disqualified for failure to comply with the work requirements specified in 921 KAR 3:042.

(4) A household in which any member receives, or is authorized to receive cash, in-kind, or other benefits funded under Temporary Assistance for Needy Families Block Grant (TANF) shall be considered categorically eligible unless:

(a) The entire household is institutionalized;

(b) A household member is ineligible due to a drug-related felony conviction;

(c) A household member is disqualified due to an intentional program violation specified in 921 KAR 3:010; or

(d) The head of household is disqualified for failure to comply with the work requirements specified in 921 KAR 3:042.

(5) If verified by the program or service conferring categorical eligibility status, a categorically eligible household shall not be required to verify the following eligibility factors:

(a) Resources;

(b) Gross and net income;

(c) Social Security number;

(d) Sponsored alien information; and

(e) Residency.

Section 7. Joint SSI and SNAP Application Process. A household in which every member is an applicant or recipient of SSI shall be allowed to simultaneously apply for both SSI and SNAP as specified in Section 3(2) of this administrative regulation.

Section 8. Voter Registration. (1) In accordance with KRS 116.048 and 42 U.S.C. 1973gg-5, a SNAP applicant or recipient shall be provided the opportunity to complete an application to register to vote or update current voter registration if the applicant or recipient is:

(a) Age eighteen (18) or over; and

(b) Not registered to vote or not registered to vote at his current address.

(2) PAFS-706, Voter Registration Rights and Declination, shall be utilized to document a SNAP applicant or recipient's choice to:

(a) Register to vote;

(b) Not register to vote; or

(c) Indicate that they are currently registered to vote.

(3) A voter registration application shall be completed if a SNAP applicant or recipient wants to:

(a) Register to vote; or

(b) Update voter registration to provide a new address.

(4) The voter registration process shall not apply to an individual not included in the assistance application, such as an authorized representative.

(5) All information utilized in the voter registration process shall remain confidential and be used only for voter registration purposes.

(6) The State Board of Elections shall approve the application to register to vote and send a confirmation or denial notice to the voter registration applicant.

Section 9. Incorporation by Reference. (1) The following material is incorporated by reference:

(a) "FS-1, Application for SNAP", 4/15[~~9/14~~]; and

(b) "PAFS-706, Voter Registration Rights and Declination", 8/10.

(2) This material may be inspected, copied, or obtained, subject to applicable copyright law, at the Department for Community Based Services, 275 East Main Street, Frankfort, Kentucky 40621, Monday through Friday, 8 a.m. to 4:30 p.m.

TERESA C. JAMES, LCSW, Commissioner
AUDREY TAYSE HAYNES, Secretary

APPROVED BY AGENCY: December 10, 2014

FILED WITH LRC: December 11, 2014 at 3 p.m.

PUBLIC HEARING AND PUBLIC COMMENT PERIOD: A public hearing on this administrative regulation shall, if requested, be held on January 21, 2015, at 9:00 a.m. in the Health Services Auditorium, Health Services Building, First Floor, 275 East Main Street, Frankfort, Kentucky. Individuals interested in attending this hearing shall notify this agency in writing by January 14, 2015, five (5) workdays prior to the hearing, of their intent to attend. If no

notification of intent to attend the hearing is received by that date, the hearing may be canceled. The hearing is open to the public. Any person who attends will be given an opportunity to comment on the proposed administrative regulation. A transcript of the public hearing will not be made unless a written request for a transcript is made. If you do not wish to attend the public hearing, you may submit written comments on the proposed administrative regulation. You may submit written comments regarding this proposed administrative regulation until close of business, February 2, 2015. Send written notification of intent to attend the public hearing or written comments on the proposed administrative regulation to:

CONTACT PERSON: Tricia Orme, Office of Legal Services, 275 East Main Street 5 W-B, Frankfort, Kentucky 40601, phone 502-564-7905, fax 502-564-7573, tricia.orme@ky.gov.

REGULATORY IMPACT ANALYSIS AND TIERING STATEMENT

Contact person: Elizabeth Caywood

(1) Provide a brief summary of:

(a) What this administrative regulation does: This administrative regulation establishes the application and the voter registration processes used by the Cabinet for Health and Family Services, Department for Community Based Services (DCBS) in the administration of the Supplemental Nutrition Assistance Program (SNAP).

(b) The necessity of this administrative regulation: This administrative regulation is necessary to establish uniform application standards for SNAP.

(c) How this administrative regulation conforms to the content of the authorizing statutes: This administrative regulation conforms to the content of the authorizing statutes by establishing an application process for SNAP.

(d) How this administrative regulation currently assists or will assist in the effective administration of the statutes: This administrative regulation assists in the administration of the statues by establishing procedures used in the administration of SNAP.

(2) If this is an amendment to an existing administrative regulation, provide a brief summary of:

(a) How the amendment will change this existing administrative regulation: The amendment to this administrative regulation will revise material incorporated by reference, FS-1, Application for SNAP, by adding language to better inform applicants of the voluntary nature of racial and ethnic data collection; specific behaviors that result in a conviction involving SNAP fraud/abuse; the possibility for an additional 18-month, court-ordered penalty for violation of SNAP rules; processing requirements for an application; and hearing rights. These language changes conform to requirements of the U.S. Department of Agriculture, Food and Nutrition Service. Technical corrections were also made in accordance with KRS Chapter 13A.

(b) The necessity of the amendment to this administrative regulation: The amendment to this administrative regulation is necessary to correct findings resulting from a federal review of SNAP and to avoid federal financial penalty.

(c) How the amendment conforms to the content of the authorizing statutes: The amendment to this administrative regulation conforms to the authorizing statutes through its improved conformity to federal rule.

(d) How the amendment will assist in the effective administration of the statutes: The amendment to this administrative regulation will assist in the effective administration of the statutes through enhanced compliance with federal requirements.

(3) List the type and number of individuals, businesses, organizations, or state and local governments affected by this administrative regulation: All SNAP recipients and potential applicants are affected by this administrative regulation. Approximately 810,628 individuals in 388,258 households participated in SNAP in Kentucky during September 2014.

(4) Provide an analysis of how the entities identified in question (3) will be impacted by either the implementation of this administrative regulation, if new, or by the change, if it is an amendment, including:

(a) List the actions that each of the regulated entities identified in question (3) will have to take to comply with this administrative regulation or amendment: This amendment will not require any additional actions on the part of SNAP applicants or recipients.

(b) In complying with this administrative regulation or amendment, how much will it cost each of the entities identified in question (3): This amendment has no cost to a SNAP applicant or recipient.

(c) As a result of compliance, what benefits will accrue to the entities identified in question (3): SNAP applicants and recipients will benefit from the amendment to this administrative regulation by being better informed of their rights and possible penalties.

(5) Provide an estimate of how much it will cost the administrative body to implement this administrative regulation:

(a) Initially: The amendment to this administrative regulation is technical and conforming in nature and has no initial cost to implement.

(b) On a continuing basis: The amendment to this administrative regulation is technical and conforming in nature and has no fiscal impact on a continuing basis.

(6) What is the source of the funding to be used for the implementation and enforcement of this administrative regulation: SNAP benefits are 100 percent federally funded through the U.S. Department of Agriculture. Administrative costs are fifty (50) percent federally funded and fifty (50) percent state funded. Funding has been appropriated in the enacted budget.

(7) Provide an assessment of whether an increase in fees or funding will be necessary to implement this administrative regulation, if new or by the change if it is an amendment: An increase in fees or funding will not be necessary to implement this amendment.

(8) State whether or not this administrative regulation established any fees or directly or indirectly increased any fees: This administrative regulation does not establish any fees or directly or indirectly increase any fees.

(9) TIERING: Is tiering applied? Tiering is not applied, because this administrative regulation will be applied in a like manner statewide.

FEDERAL MANDATE ANALYSIS COMPARISON

1. Federal statute or regulation constituting the federal mandate. 7 C.F.R. 273.2, 7 U.S.C. 2011-2029, and 42 U.S.C. 1973gg-10

2. State compliance standards. KRS 116.048, 194A.050 (1)

3. Minimum or uniform standards contained in the federal mandate. 7 C.F.R. 273.2, 7 U.S.C. 2011-2029, and 42 U.S.C. 1973gg-10

4. Will this administrative regulation impose stricter requirements, or additional or different responsibilities or requirements, than those required by the federal mandate? The amendment to this administrative regulation will impose no stricter requirements, or additional or different responsibilities or requirements, than those required by the federal mandate.

5. Justification for the imposition of the stricter standard, or additional or different responsibilities or requirements. Justification for the imposition of a stricter standard, or additional or different responsibilities or requirements, is not applicable.

FISCAL NOTE ON STATE OR LOCAL GOVERNMENT

1. What units, parts, or divisions of state or local government (including cities, counties, fire departments, or school districts) will be impacted by this administrative regulation? The Cabinet for Health and Family Services, Department for Community Based Services will be impacted by this administrative regulation.

2. Identify each state or federal statute or federal regulation that requires or authorizes the action taken by the administrative regulation. KRS 116.048, 194A.050(1), 7 C.F.R. 271.4, and U.S.C. 2011-2029.

3. Estimate the effect of this administrative regulation on the expenditures and revenues of a state or local government agency (including cities, counties, fire departments, or school districts) for

the first full year the administrative regulation is to be in effect.

(a) How much revenue will this administrative regulation generate for the state or local government (including cities, counties, fire departments, or school districts) for the first year? This administrative regulation does not generate revenue and will not generate any additional revenue during the first year.

(b) How much revenue will this administrative regulation generate for the state or local government (including cities, counties, fire departments, or school districts) for subsequent years? This administrative regulation does not generate revenue and will not generate any additional revenue in subsequent years.

(c) How much will it cost to administer this program for the first year? This amendment will not require any additional costs in the first year.

(d) How much will it cost to administer this program for subsequent years? This amendment will not require any additional costs in subsequent years.

Note: If specific dollar estimates cannot be determined, provide a brief narrative to explain the fiscal impact of the administrative regulation.

Revenues (+/-):

Expenditures (+/-):

Other Explanation:

CABINET FOR HEALTH AND FAMILY SERVICES
Department for Community Based Services
Division of Family Support
(Amendment)

921 KAR 3:060. Administrative disqualification hearings and penalties.

RELATES TO: 7 C.F.R. 273.15, 273.17, 7 U.S.C. 2015

STATUTORY AUTHORITY: KRS Chapter 13B, 194A.010(2), 194A.050(1), 7 C.F.R. 271.4, 273.16

NECESSITY, FUNCTION, AND CONFORMITY: KRS 194A.010(2) requires the Cabinet for Health and Family Services to administer income-supplement programs that protect, develop, preserve, and maintain families and children in the Commonwealth. KRS 194A.050(1) requires the secretary to promulgate administrative regulations necessary to implement programs mandated by federal law or to qualify for the receipt of federal funds and necessary to cooperate with other state and federal agencies for the proper administration of the cabinet and its programs. 7 C.F.R. 271.4 requires each state to administer a Supplemental Nutrition Assistance Program (SNAP). 7 C.F.R. 273.16 requires the agency administering SNAP to provide a hearing process for individuals accused of intentionally violating a SNAP regulation and to implement penalties and disqualifications for such violations. KRS Chapter 13B establishes the hearing process to be followed in the Commonwealth. This administrative regulation establishes the procedures used by the cabinet in determining if an intentional program violation (IPV) has occurred and the penalties that shall be applied for an IPV.

Section 1. Administrative Disqualification Hearings. (1) Unless a different procedure is specified in this administrative regulation, an administrative disqualification hearing shall:

(a) Be conducted in accordance with 921 KAR 3:070 and KRS Chapter 13B; and

(b) Include:

1. The issuance of a recommended order;

2. Procedures for written exceptions; and

3. The issuance of a final order.

(2) The cabinet shall retain:

(a) The official record of an administrative disqualification hearing until all appeals have been exhausted; and

(b) A case record with an IPV disqualification indefinitely.

Section 2. Intentional Program Violations. (1) If the cabinet suspects that an individual committed an IPV, as defined in 921 KAR 3:010, the cabinet shall:

(a) Initiate an administrative disqualification hearing; or

(b) If warranted by the facts of the case, refer the suspected IPV claim to the Office of the Inspector General (OIG) for investigation or referral for prosecution.

(2) An administrative disqualification hearing may be initiated regardless of the current eligibility of an individual.

(3) If the OIG determines that the IPV does not warrant investigation or referral for prosecution, the cabinet shall initiate an administrative disqualification hearing as specified in this administrative regulation.

Section 3. Notification. (1) Form FS-80, Notice of SNAP Suspected Intentional Program Violation, shall serve as the notification to a household of the:

(a) Cabinet's suspicion that an IPV has been committed;

(b) Amount and period of the overpayment for the suspected IPV; and

(c) Household's right to an administrative disqualification hearing.

(2) The cabinet shall provide an individual suspected of an IPV a Form FS-80, Supplement A, Voluntary Waiver of SNAP Administrative Disqualification Hearing, which allows the individual to waive the right to an administrative disqualification hearing, with or without admitting an IPV was committed.

(3) If the household does not return the FS-80 Supplement A, the cabinet shall schedule an administrative disqualification hearing in accordance with 7 C.F.R. 273.16(e)(3).

(4) In accordance with KRS 13B.050, the administrative disqualification hearing notice shall be sent:

(a) By certified mail;

(b) To the addressee only; and

(c) With a return receipt requested.

(5) The administrative disqualification hearing notice shall provide information as specified in 7 C.F.R. 273.16(e)(3)(iii).

(6) In accordance with 7 C.F.R. 273.16(e)(2)(iii), the hearing officer shall advise the household member or representative that they may refuse to answer questions during the hearing.

(7) The cabinet shall provide a household notice regarding the IPV determination in accordance with 7 C.F.R. 273.16(e)(9) and KRS 13B.120.

Section 4. Timeframes. (1) Within the ninety (90) day timeframe specified in 7 C.F.R. 273.16(e)(2)(iv), the cabinet shall:

(a) Conduct an administrative disqualification hearing; and

(b) Issue a final order pursuant to the provisions established in 921 KAR 3:070, Section 17.

(2) In accordance with 7 C.F.R. 273.16(e)(2)(iv), a hearing may be postponed:

(a) One (1) time; and

(b) For no more than thirty (30) days.

(3) If a hearing is postponed, the time limit specified in subsection (1) of this section shall be extended for as many days as the hearing is postponed.

Section 5. Hearing Attendance. (1) An administrative disqualification hearing shall be conducted in accordance with 7 C.F.R. 273.16(e)(4).

(2) <u>If a household member or representative cannot be located or does not appear for the administrative disqualification hearing, the hearing officer shall:</u>

<u>(a) Conduct the hearing without the household member or representative;</u>

<u>(b) Consider the evidence; and</u>

<u>(c) Determine whether an intentional program violation was committed based on clear and convincing evidence</u>[~~If a household representative does not appear for the administrative disqualification hearing, the hearing officer shall review the case file to determine if the hearing shall:~~

~~(a) Proceed without household representation, because the return receipt from the hearing notice verified the notice was received by the individual; or~~

~~(b) Not be conducted, because the hearing notice or return receipt is annotated as unclaimed or undeliverable~~].

(3) In accordance with 7 C.F.R. 273.16(e)(4), the cabinet shall rescind a determination of an intentional program violation and conduct a new hearing upon an order of finding if the:

(a) Household was not represented at the hearing;

(b) Individual was determined to have committed an IPV; and

(c)1. Individual, within ten (10) days of the scheduled hearing, established good cause for failure to appear in accordance with 921 KAR 3:070, Section 8(2); or

2. Individual, within thirty (30) days after the date of the notice, established good cause for failure to appear in accordance with 921 KAR 3:070, Section 8(2)(f) by showing nonreceipt of the notice of hearing[~~Hearing officer later determines the household had good cause, in accordance with 921 KAR 3:070, Section 8(2), for not appearing~~].

Section 6. Benefits and Participation. (1) In accordance with 7 C.F.R. 273.16(e)(5), the participation of a household suspected of an IPV shall not be affected by the suspected IPV until a disqualification is implemented based on the:

(a) IPV being substantiated by the final order or a court of appropriate jurisdiction;

(b) Individual waiving the right to an administrative disqualification hearing by completing, signing, and returning the FS-80, Supplement A; or

(c) Individual completing, signing, and returning the form FS-111, Deferred Adjudication Disqualification Consent Agreement, pursuant to Section 7 of this administrative regulation.

(2) If the cabinet's determination of an IPV is later reversed, the cabinet shall:

(a) Reinstate the individual, if eligible; and

(b) In accordance with 7 C.F.R. 273.17, restore benefits:

1. That were lost as a result of the disqualification; and

2. For no more than twelve (12) months.

Section 7. Deferred Adjudication. (1) The cabinet shall accept a completed form FS-111, Deferred Adjudication Disqualification Consent Agreement, in a case of deferred adjudication pursuant to 7 C.F.R. 273.16(h).

(2) In accordance with 7 C.F.R. 273.16(h), the cabinet shall notify an individual signing a FS-111 of the:

(a) Consequences of consenting to disqualification;

(b) Disqualification; and

(c) Effective date of the disqualification.

Section 8. Penalties. (1) In accordance with 7 C.F.R. 273.16(b), an individual shall be ineligible to participate in SNAP, if the individual has:

(a) Committed an IPV, as determined by:

1. An administrative disqualification hearing: or

2. A court; or

(b) Signed a waiver of right to an administrative disqualification hearing or a disqualification consent agreement.

(2) The time periods for IPV disqualifications shall be implemented in accordance with 7 C.F.R. 273.16(b).

(3) In accordance with 7 C.F.R. 273.16(b)(11), the cabinet shall only disqualify the individual who meets the criteria specified in subsection (1) of this section, not the entire household.

(4) In accordance with 7 C.F.R. 273.16(b)(12), the cabinet shall hold the entire household responsible for making restitution on an overpayment, not just the disqualified individual.

(5) The cabinet shall inform the household in writing of the disqualification penalties for committing an IPV each time the household applies for benefits.

Section 9. Procedures for Appeal. In accordance with 7 C.F.R. 273.16(e)(8)(ii):

(1) Further administrative appeal procedures shall not exist after an:

(a) Administrative disqualification hearing determines that an IPV was committed; or

(b) Individual waives the right to an administrative disqualification hearing;

(2) A cabinet determination of an IPV shall not be reversed by a final order from a subsequent fair hearing; and

(3) An individual determined to have committed an IPV may seek relief in a court having appropriate jurisdiction pursuant to KRS 13B.140.

Section 10. Incorporation by Reference. (1) The following material is incorporated by reference:

(a) "FS-80, Notice of SNAP Suspected Intentional Program Violation", 4/15[~~9/14~~];

(b) "FS-80, Supplement A, Voluntary Waiver of SNAP Administrative Disqualification Hearing", 9/14; and

(c) "FS-111, Deferred Adjudication Disqualification Consent Agreement", 9/14.

(2) This material may be inspected, copied, or obtained, subject to applicable copyright law, at the Department for Community-Based Services, 275 East Main Street, Frankfort, Kentucky 40621, Monday through Friday, 8 a.m. to 4:30 p.m.

TERESA C. JAMES, LCSW, Commissioner
AUDREY TAYSE HAYNES, Secretary

APPROVED BY AGENCY: December 10, 2014

FILED WITH LRC: December 11, 2014 at 3 p.m.

PUBLIC HEARING AND PUBLIC COMMENT PERIOD: A public hearing on this administrative regulation shall, if requested, be held on January 21, 2015, at 9:00 a.m. in the Health Services Auditorium, Health Services Building, First Floor, 275 East Main Street, Frankfort, Kentucky. Individuals interested in attending this hearing shall notify this agency in writing by January 14, 2015, five (5) workdays prior to the hearing, of their intent to attend. If no notification of intent to attend the hearing is received by that date, the hearing may be canceled. The hearing is open to the public. Any person who attends will be given an opportunity to comment on the proposed administrative regulation. A transcript of the public hearing will not be made unless a written request for a transcript is made. If you do not wish to attend the public hearing, you may submit written comments on the proposed administrative regulation. You may submit written comments regarding this proposed administrative regulation until close of business, February 2, 2015. Send written notification of intent to attend the public hearing or written comments on the proposed administrative regulation to:

CONTACT PERSON: Tricia Orme, Office of Legal Services, 275 East Main Street 5 W-B, Frankfort, Kentucky 40601, phone 502-564-7905, fax 502-564-7573, tricia.orme@ky.gov.

REGULATORY IMPACT ANALYSIS AND TIERING STATEMENT

Contact person: Elizabeth Caywood

(1) Provide a brief summary of:

(a) What this administrative regulation does: This administrative regulation establishes the criteria used by the Cabinet for Health and Family Services, Department for Community Based Services in determining if an intentional program violation (IPV) has occurred in the Supplemental Nutrition Assistance Program (SNAP) and the penalties that shall be applied for said violation.

(b) The necessity of this administrative regulation: This administrative regulation is necessary in order to comply with 7 C.F.R. 273.16 and KRS Chapter 13B by establishing a hearing process for individuals suspected of intentionally violating a SNAP regulation.

(c) How this administrative regulation conforms to the content of the authorizing statutes: This administrative regulation conforms to the authorizing statutes by establishing a hearing process and penalties associated with intentional program violations of SNAP.

(d) How this administrative regulation currently assists or will assist in the effective administration of the statutes: This administrative regulation currently assists in the effective administration of the statutes by developing a hearing process and establishing penalties for SNAP intentional program violations.

(2) If this is an amendment to an existing administrative regulation, provide a brief summary of:

(a) How the amendment will change this existing administrative

regulation: The amendment to the administrative regulation will revise material incorporated by reference, form FS-80, Notice of SNAP Suspected Intentional Program Violation, by adding language to inform individuals of their rights during a disqualification hearing as required by the U.S. Department of Agriculture, Food and Nutrition Service (FNS). In addition, the amendment makes technical corrections in accordance with KRS Chapter 13A.

(b) The necessity of the amendment to this administrative regulation: The amendment to this administrative regulation is necessary to address findings from a recent federal review of the program and to avoid federal financial penalty.

(c) How the amendment conforms to the content of the authorizing statutes: The amendment to this administrative regulation conforms to the content of the authorizing statutes by enhancing compliance with federal requirements.

(d) How the amendment will assist in the effective administration of the statutes: The amendment to this administrative regulation will assist in the effective administration of the statutes by informing individuals of their rights during a disqualification hearing as required by the federal administrating agency.

(3) List the type and number of individuals, businesses, organizations, or state and local governments affected by this administrative regulation: This administrative regulation will affect SNAP recipients and potential applicants. There were 810,628 individuals comprising 388,258 households receiving SNAP benefits in Kentucky during September 2014.

(4) Provide an analysis of how the entities identified in question (3) will be impacted by either the implementation of this administrative regulation, if new, or by the change, if it is an amendment, including:

(a) List the actions that each of the regulated entities identified in question (3) will have to take to comply with this administrative regulation or amendment: The amendment to this administrative regulation will not require any additional action on the part of SNAP applicants or recipients.

(b) In complying with this administrative regulation or amendment, how much will it cost each of the entities identified in question (3): Neither the amendment nor the administrative regulation involves any cost to SNAP applicants or recipients.

(c) As a result of compliance, what benefits will accrue to the entities identified in question (3): All SNAP applicants and recipients will benefit from the amendment to this administrative regulation by having their rights during a disqualification hearing more clearly stated on the program form.

(5) Provide an estimate of how much it will cost the administrative body to implement this administrative regulation:

(a) Initially: The amendment to this administrative regulation is technical and conforming in nature and has no initial cost to implement.

(b) On a continuing basis: The amendment to this administrative regulation is technical and conforming in nature and has no fiscal impact on a continuing basis.

(6) What is the source of the funding to be used for the implementation and enforcement of this administrative regulation: SNAP benefits are 100 percent federally funded through the United States Department of Agriculture. Program administrative costs are fifty (50) percent federally funded and fifty (50) percent state funded. Funding has been appropriated in the enacted budget.

(7) Provide an assessment of whether an increase in fees or funding will be necessary to implement this administrative regulation, if new, or by the change if it is an amendment: The implementation of the amendment to this administrative regulation will not create an increase in fees or funding.

(8) State whether or not this administrative regulation established any fees or directly or indirectly increased any fees: This administrative regulation does not establish any fees or directly or indirectly increase any fees

(9) TIERING: Is tiering applied? Tiering is not applied, because this administrative regulation will be applied in a like manner on a statewide basis.

FEDERAL MANDATE ANALYSIS COMPARISON

1. Federal statute or regulation constituting the federal mandate. 7 C.F.R. 271.4, 7 C.F.R 273.16

2. State compliance standards. KRS Chapter 13B, KRS 194A.010(2), KRS 194A.050(1)

3. Minimum or uniform standards contained in the federal mandate. The provisions of the administrative regulation comply with the federal mandate.

4. Will this administrative regulation impose stricter requirements, or additional or different responsibilities or requirements, than those required by the federal mandate? The amendment to this administrative regulation will impose no stricter requirements, or additional or different responsibilities or requirements, than those required by the federal mandate.

5. Justification for the imposition of the stricter standard, or additional or different responsibilities or requirements. Justification for the imposition of a stricter standard, or additional or different responsibilities or requirements, is not applicable.

FISCAL NOTE ON STATE OR LOCAL GOVERNMENT

1. What units, parts, or divisions of state or local government (including cities, counties, fire departments, or school districts) will be impacted by this administrative regulation?
The Cabinet for Health and Family Services, Department for Community Based Services will be impacted by this administrative regulation.

2. Identify each state or federal statute or federal regulation that requires or authorizes the action taken by the administrative regulation. KRS Chapter 13B, 194A.010(2), 194A.050(1), 7 C.F.R. 271.4, 7 C.F.R. 273.16

3. Estimate the effect of this administrative regulation on the expenditures and revenues of a state or local government agency (including cities, counties, fire departments, or school districts) for the first full year the administrative regulation is to be in effect.

(a) How much revenue will this administrative regulation generate for the state or local government (including cities, counties, fire departments, or school districts) for the first year? This administrative regulation does not generate revenue and will not generate any revenue for the state or local government in the first year.

(b) How much revenue will this administrative regulation generate for the state or local government (including cities, counties, fire departments, or school districts) for subsequent years? This administrative regulation does not generate revenue and will not generate any revenue for the state or local government in subsequent years.

(c) How much will it cost to administer this program for the first year? No additional costs are necessary to administer this program for the first year.

(d) How much will it cost to administer this program for subsequent years? No additional costs are necessary to administer this program for subsequent years.

Note: If specific dollar estimates cannot be determined, provide a brief narrative to explain the fiscal impact of the administrative regulation.

Revenues (+/-):
Expenditures (+/-):
Other Explanation:

NEW ADMINISTRATIVE REGULATIONS

TRANSPORTATION CABINET
Department of Vehicle Regulation
Division of Motor Carriers
(New Administrative Regulation)

601 KAR 1:112. Transportation network company.

RELATES TO: KRS 17.500, 61.878(1)(c)1,186.281, 189.290, 189A.010, 281.600, 281.620, 281.6301(2), 281.650, 281.655, 281.730(1), 281.912, 281.990, 304.39-020(2), 304.39-320, 532.060

STATUTORY AUTHORITY: KRS 281.600

NECESSITY, FUNCTION, AND CONFORMITY: KRS 281.600 authorizes the Department of Vehicle Regulation ("department") to promulgate administrative regulations to regulate and establish requirements for the safe operation of motor vehicles and motor carriers. This administrative regulation establishes the requirements for a transportation network company ("TNC") to operate in Kentucky.

Section 1. Definitions. (1) "Mobile application" means an application or a computer program designed to run on a smartphone, tablet computer, or other mobile device that is used by a TNC to connect TNC drivers with potential passengers.

(2) "Operating authority" means the authority granted to operate as a TNC in the Commonwealth through the application process with the department.

(3) "Prearranged ride" means the period of time that begins at the time a TNC driver accepts a requested ride through a TNC's digital network or mobile application, continues while the driver transports the rider in a personal vehicle, and ends at the time the rider departs from the vehicle.

(4) "Pre-trip acceptance liability policy" means the TNC insurance liability coverage that may apply if a TNC driver is logged into a TNC mobile application and available to receive requests for TNC services if the driver has not accepted a request, is not in route to pick up a passenger, or is not transporting a passenger.

(5) "Street hail" means a request for service made by a potential passenger by using hand gestures or verbal statements.

(6) "Transportation network company" or "TNC" means an entity operating in Kentucky as a motor carrier that uses a digital network or mobile application service to connect passengers to TNC drivers providing transportation network company services.

(7) "Transportation network company driver" or "TNC driver" means an individual who operates a motor vehicle that is owned or leased by the individual and used to provide transportation network company services.

(8) "Transportation network company services" or "TNC services" means the transportation of a passenger between points chosen by the passenger and prearranged with a TNC driver through the use of a TNC digital network or software application.

Section 2. Application. (1) A TNC shall register as a business with the Kentucky Secretary of State unless the applicant is a sole proprietor.

(2) A TNC shall submit a completed Transportation Network Company Authority Application, TC 95-627 and an application fee pursuant to KRS 281.620 to the Division of Motor Carriers.

(3) An application may be submitted electronically, by mail, or by hand delivery.

(4) A TNC shall submit an annual renewal fee to the Division of Motor Carriers pursuant to KRS 281.650.

(5) Operating authority obtained pursuant to this section shall not be transferable.

(6) The following documents shall be submitted with an application and thereafter with each annual renewal:

(a) An affidavit from the corporate officer in charge of Kentucky operations certifying that the national criminal background check of TNC drivers established in Section 5 of this administrative regulation shall be completed prior to allowing the TNC driver to accept rides on the digital network; and

(b) One (1) copy of the current contractual agreement between the TNC and TNC drivers.

(7) A deficient application shall be returned to the applicant with no formal action taken by the department.

Section 3. Demonstration of Financial Responsibility and Insurance. (1) While engaged in a prearranged ride, a TNC shall have primary liability insurance coverage of no less than $1,000,000 per occurrence for damages arising out of claims for bodily injury, death, or destruction of property.

(2) Primary liability insurance coverage during a prearranged ride shall include:

(a) Basic reparation benefits as defined in KRS 304.39-020(2);

(b) Uninsured vehicle coverage as established in KRS 304.20-020; and

(c) Underinsured vehicle coverage as established in KRS 304.39-320.

(3) While a TNC driver is logged into a TNC mobile application but prior to accepting a prearranged ride, a TNC shall maintain pre-trip acceptance liability insurance coverage for TNC drivers in accordance with subsection (4) of this section if:

(a) A TNC driver is logged into a TNC mobile application and is available to receive requests for transportation services from a passenger through the mobile application;

(b) A TNC driver has not accepted a request for TNC services through the mobile application;

(c) A TNC driver is not in route to pick up a passenger; and

(d) A TNC driver is not transporting a passenger to his or her destination.

(4) A TNC shall maintain a pre-trip acceptance liability insurance policy of no less than $50,000 for death and personal injury per person, $100,000 dollars for death and personal injury per incident, and $25,000 dollars for property damage during the periods of time established in subsection (3) of this section. This policy shall provide coverage in the event the driver's personal motor vehicle liability policy does not provide coverage for an incident.

(5) The insurance coverage required by subsections (1) and (3) of this section may be provided either by an insurer licensed pursuant to KRS 304.3-070 or with a surplus lines insurer eligible under KRS 304.10-010 through KRS 304.10-070.

(6) The insurance coverage prior to a prearranged ride shall include basic reparation benefits pursuant to KRS 304.39-040.

(7) A certificate of liability insurance that meets the required insurance coverage under subsection (3) of this section on a standard Accord form shall be filed with the department for each policy.

(8) A TNC shall require TNC drivers to maintain a personal motor vehicle liability insurance policy that provides coverage in accordance with KRS 304.39 for the vehicle and TNC driver if the driver is not logged into the TNC's digital network or mobile application or engaged in a prearranged ride.

Section 4. Vehicles. (1) A vehicle used by a driver for TNC services shall be qualified by the department to operate by submitting a completed Transportation Network Company Authority Application, TC 95-627 and the minimum annual license fee pursuant to KRS 186.281(3) at the time of the application process established in Section 2 of this administrative regulation.

(2) The TNC shall ensure that the vehicles used by TNC drivers to transport passengers shall be subject to an annual safety inspection by an automotive technician who holds a valid automotive service excellence (A.S.E.) certification.

(3) A TNC shall collect and maintain information on the vehicles being used to provide service by TNC drivers including:

(a) The VIN and license plate number; and

(b) Records of official vehicle inspections by the automotive technician.

(4) Records of vehicle inspection and VIN and license plate numbers shall be kept by the TNC for a minimum of three (3) years

from the date of inspection and the TNC shall make the records available to the department or its representative on request. The information and records may be submitted as proprietary information pursuant to KRS 61.878(1)(c)1.

(5)(a) A vehicle used to provide TNC services shall be readily identifiable by the following:

1. A decal affixed to the front windshield on the passenger side of the vehicle provided by the department to the TNC to distribute to qualified vehicles; and

2. An optional decal or trade dress that is company specific and issued by the TNC.

(b) A vehicle fee receipt card shall be presented on inspection.

(6) A driver who is no longer providing TNC service shall return the department issued decal and the vehicle fee receipt card to the TNC who shall return it to the Division of Motor Carriers.

(7) A TNC shall ensure that the vehicles used by drivers to provide TNC services shall:

(a) Have at least four (4) doors;

(b) Be designed to carry no more than eight (8) persons including the driver; and

(c) Be no more than ten (10) model years old with an odometer reading of less than 200,000 miles.

Section 5. TNC Drivers. (1) A TNC shall require each driver to undergo a national criminal background check before providing TNC services. The background check shall be updated every three (3) years that a driver provides TNC services.

(2) The TNC shall submit verification of the background check via an affidavit to the department pursuant to Section 2 of this administrative regulation. The national criminal background check shall be either:

(a) A comprehensive background check using fingerprint analysis; or

(b) An individual analysis using a social security number.

(3) The analysis required in subsection (1) of this section shall be conducted by a business or firm engaged in determining criminal background history.

(4) A TNC shall also require that each TNC driver:

(a) Is at least twenty-one (21) years old and the registered owner of the vehicle;

(b) Has a valid state-issued driver license and vehicle registration;

(c) Has personal automobile insurance coverage as established in Section 3 of this administrative regulation;

(d) Has completed an annual driver safety training course approved by the department;

(e) Provides a written or electronic affirmation that he or she is fit and able to operate a motor vehicle to provide TNC services; and

(f) Is in compliance with applicable state law and local ordinances.

(5) A current list of drivers shall be kept on file with the TNC and made available for inspection by the department on request. A TNC driver's electronic file shall include the following:

(a) A current driving history record to be updated annually;

(b) The current address of the driver;

(c) A copy of a valid state-issued driver's license and the operator's license number;

(d) Proof of his or her personal automobile insurance coverage;

(e) Proof of personal vehicle registration;

(f) Proof of the written or electronic affirmation that a TNC driver is fit and able to operate a motor vehicle to provide TNC services;

(g) Verification of the criminal background check required in subsection (1) of this section;

(h) Records indicating whether a driver has refused to accept a prearranged ride and the reason for doing so; and

(i) Records of complaints against a driver.

(6) A person shall not be a TNC driver whose driving history record shows a conviction of driving under the influence of alcohol or drugs in the previous five (5) years before application to become a driver.

(7) A TNC driver shall not provide transportation services if he or she has been convicted of one (1) of the following offenses:

(a) A Class A felony;

(b) A Class B felony;

(c) An offense involving unlawful sexual behavior as established in KRS 17.500;

(d) Leaving the scene of a traffic accident;

(e) Causing a fatality or fatalities through negligent operation of a vehicle; or

(f) Using a vehicle in the commission of a felony involving the manufacture or distribution of a controlled substance; and

(g) Four (4) moving violations in the past three (3) years or one (1) major violation in the past three (3) years including:

1. Driving on a suspended license;

2. Speeding in excess of twenty-six (26) miles per hour; or

3. Reckless driving as established in KRS 189.290.

(8) A person who has been convicted in another jurisdiction of an offense comparable to one of the offenses in subsections (6) and (7) of this section shall not serve as a TNC driver.

Section 6. Passenger Service. (1) A TNC shall adopt a policy of non-discrimination based on the following:

(a) Destination;

(b) Race or color;

(c) National origin;

(e) Religious belief or affiliation;

(f) Sex and sexual orientation or identity;

(g) Disability;

(h) Age; and

(i) The presence of a passenger's service animal.

(2) A TNC shall notify TNC drivers of the adopted policy of non-discrimination established in subsection (1) of this section.

(3) After acceptance, a TNC driver may refuse to transport a passenger who is acting in an unlawful, disorderly, or endangering manner but shall comply with the non-discriminatory policy in subsection (1) of this section. A driver may also refuse to transport a passenger with a service animal if the driver has a documented medical allergy.

(4) A TNC driver shall not transport a passenger under the age of fourteen (14) unless accompanied by a person over the age of eighteen (18).

(5) A TNC shall establish policies regarding TNC driver behavior that shall include the following prohibitions:

(a) Being under the influence of alcohol or another substance or combination of substances that impair the driving ability while providing TNC services;

(b) Accepting a street hail by a potential rider;

(c) Directly soliciting a passenger or responding to a direct solicitation; or

(d) Providing services for cash.

(6) A driver shall immediately report the following to the driver's affiliated TNC:

(a) A refusal to transport a passenger and the reasons for the refusal within forty-eight (48) hours after the refusal where the refusal occurred after the ride had been accepted by the driver;

(b) Information regarding a driving citation, incident, or accident within twenty-four (24) hours after the event; or

(c) Information regarding a conviction within twenty-four (24) hours.

(7) A TNC shall provide the following information to the public on its Web site and mobile device application software:

(a) A schedule of its rates or the method used to calculate rates and peak pricing; and

(b) Information indicating a zero tolerance policy related to drug and alcohol usage by its drivers while performing TNC services and a passenger support telephone number or email address where a suspected violation may be immediately reported.

(8) A TNC shall provide the following information to a person requesting a ride through its mobile application:

(a) A statement indicating that cash shall not be accepted in payment for the transportation service and that the acceptance of cash may invalidate insurance coverage in the event of an accident;

(b) The expected cost of the trip if requested by a potential passenger;

(c) The first name and a photograph of the TNC driver accepting the ride request; and

(d) A photograph or description, including license plate number, of the vehicle that will be used for the ride.

(9) At the completion of the prearranged ride, a TNC shall electronically provide the passenger with a receipt showing:

(a) The point of origin and destination of the ride;

(b) The duration and distance of the ride;

(c) The cost of the ride broken down into base fare and additional charges; and

(d) The driver's first name.

(10) Hours of service for a TNC driver shall be the same as established in KRS 281.730(1).

Section 7. Terms of Service. (1) The TNC shall not require a hold harmless or indemnification clause in the terms of service for a TNC driver or passenger that may be used to evade the insurance requirements of this administrative regulation and KRS Chapter 281.

(2) A TNC shall not disclose to a third party the personally identifiable information of a user of the TNC's mobile application unless:

(a) The TNC obtains the user's consent to disclose personally identifiable information;

(b) The disclosure is required to comply with a legal obligation; or

(c) The disclosure is required to protect or defend the terms of use of the service or to investigate violations of the terms of use.

(3) A TNC may disclose a passenger's name and telephone number to the TNC driver in order to facilitate correct identification of the passenger by the driver, or to facilitate communication between the passenger and the driver.

Section 8. Penalties. (1) Penalties for a violation of the provisions of this administrative regulation shall be assessed pursuant to KRS 281.990.

(2) A TNC shall be responsible for an affiliated TNC driver's failure to comply with this administrative regulation if the driver's violation has been previously reported to the TNC in writing and the TNC has failed to take action within ten (10) days of the report.

Section 9. Incorporation by Reference. (1) "Transportation Network Company Authority Application," TC 95-627, November, 2014, is incorporated by reference.

(2) This material may be inspected, copied, or obtained, subject to applicable copyright law, at the Department of Vehicle Regulation, 200 Mero Street, Frankfort, Kentucky 40622, Monday through Friday, 8 a.m. to 4:30 p.m. This material may also be obtained by accessing the department's Web site at http://transportation.ky.gov/.

MICHAEL W. HANCOCK, P. E., Secretary
RODNEY KUHL, Commissioner
D. ANN DANGELO, Office of Legal Services

APPROVED BY AGENCY: December 4, 2014

FILED WITH LRC: December 5, 2014

PUBLIC HEARING AND PUBLIC COMMENT PERIOD: A public hearing on this administrative regulation shall be held on January 22, 2015 at 10:00 a.m. local time at the Transportation Cabinet, Transportation Cabinet Building, Hearing Room C121, 200 Mero Street, Frankfort, Kentucky 40622. Individuals interested in being heard at this hearing shall notify this agency in writing five (5) working days prior to the hearing, of their intent to attend. If you have a disability for which the Transportation Cabinet needs to provide accommodations, please notify us of your requirement five working days prior to the hearing. This request does not have to be in writing. If no notification of intent to attend the hearing is received by that date, the hearing may be cancelled. This hearing is open to the public. Any person who wishes to be heard will be given an opportunity to comment on the proposed administrative regulation. A transcript of the public hearing will not be made unless a written request for a transcript is made. If you do wish to be heard at the public hearing, you may submit written comments on the proposed administrative regulation. Written comments shall be accepted until the close of business February 2, 2015. Send written notification of intent to be heard at the public hearing or written comments on the proposed administrative regulation to the contact person.

CONTACT PERSON: D. Ann DAngelo, Asst. General Counsel, Transportation Cabinet, Office of Legal Services, 200 Mero Street, Frankfort, Kentucky 40622, phone (502) 564-7650, fax (502) 564-5238.

REGULATORY IMPACT ANALYSIS AND TIERING STATEMENT

Contact Person: Ann DAngelo

(1) Provide a brief summary of:

(a) What this administrative regulation does: This administrative regulation establishes the requirements for a transportation network company to operate in the state of Kentucky.

(b) The necessity of this administrative regulation: This administrative regulation is necessary to address the growing use of online mobile applications to connect riders with vehicles for hire.

(c) How this administrative regulation conforms to the content of the authorizing statutes: KRS 281.600 authorizes the cabinet to promulgate administrative regulations to establish requirements for the safe operation of motor vehicles and motor carriers.

(d) How this administrative regulation currently assists or will assist in the effective administration of the statutes: This administrative regulation will establish the regulatory requirements for the safe operation of a transportation network company.

(2) If this is an amendment to an existing administrative regulation, provide a brief summary of: This is a new administrative regulation.

(a) How the amendment will change this existing administrative regulation: n/a

(b) The necessity of the amendment to this administrative regulation: n/a

(c) How the amendment conforms to the content of the authorizing statutes: n/a

(d) How the amendment will assist in the effective administration of the statutes: n/a (a) n/a

(3) List the type and number of individuals, businesses, organizations, or state and local governments affected by this administrative regulation: This administrative regulation will affect companies desiring to operate as a transportation network company and the cabinet's Division of Motor Carriers.

(4) Provide an analysis of how the entities identified in question (3) will be impacted by either the implementation of this administrative regulation, if new, or by the change, if it is an amendment, including:

(a) List the actions that each of the regulated entities identified in question (3) will have to take to comply with this administrative regulation or amendment: A business desiring to operating as a transportation network company will be required to submit an application and attachments to the department; ensure that a criminal background check is performed for each driver; ensure that a vehicle safety check has been performed on vehicles used to transport the public; and maintain up to date files on drivers.

(b) In complying with this administrative regulation or amendment, how much will it cost each of the entities identified in question (3): A transportation network company applying to operate in Kentucky will submit a fee pursuant to KRS 281.620; an annual renewal fee pursuant to KRS 281.650, and an annual license fee pursuant to KRS 186.281(3).

(c) As a result of compliance, what benefits will accrue to the entities identified in question (3): If compliant with the requirements of this regulation, businesses desiring to operate as transportation network companies will be granted operating authority.

(5) Provide an estimate of how much it will cost the administrative body to implement the administrative regulation:

(a) Initially: Approximately $7,500

(b) On a continuing basis: Approximately $1,000 annually

(6) What is the source of the funding to be used for the implementation and enforcement of this administrative regulation: road funds

(7) Provide an assessment of whether an increase in fees or funding will be necessary to implement this administrative regulation, if new, or by the change if it is an amendment: Fees shall be pursuant to statute.

(8) State whether or not this administrative regulation established any fees or directly or indirectly increased any fees: No fees are established by this regulation either directly or indirectly.

(9) TIERING: Is tiering applied? No. Tiering is not applied. All TNC applications for operating authority will be handled the same.

FISCAL NOTE ON STATE OR LOCAL GOVERNMENT

(1) What units, parts, or divisions of state or local government (including cities, counties, fire departments, or school districts) will be impacted by this administrative regulation? KYTC Division of Motor Carriers, Department of Vehicle Regulation

(2) Identify each state or federal statute or federal regulation that requires or authorizes the action taken by the administrative regulation. KRS 281.600

(3) Estimate the effect of this administrative regulation on the expenditures and revenues of a state or local government agency (including cities, counties, fire departments, or school districts) for the first full year the administrative regulation is to be in effect. Initial programming fees of approximately $7,500 will affect the expenditures and revenue of the Division of Motor Carriers at KYTC.

(a) How much revenue will this administrative regulation generate for the state or local government (including cities, counties, fire departments, or school districts) for the first year? This administrative regulation may generate approximate $9,000 annually. The amount is dependent on the number of TNC vehicles qualified under the administrative regulation.

(b) How much revenue will this administrative regulation generate for the state or local government (including cities, counties, fire departments, or school districts) for subsequent years? This administrative regulation is not expected to generate revenue.

(c) How much will it cost to administer this program for the first year? Approximately $7,500.

(d) How much will it cost to administer this program for subsequent years? Approximately $1,000.

Note: If specific dollar estimates cannot be determined, provide a brief narrative to explain the fiscal impact of the administrative regulation.

Revenues (+/-):

Expenditures (+/-):

Other Explanation:

Education and Workforce Development Cabinet
Kentucky Board of Education
Department of Education
(New Administrative Regulation)

702 KAR 3:320. Finance officer certification requirements.

RELATES TO: KRS 160.431, 161.020(1)(b)

STATUTORY AUTHORITY: KRS 156.070, 160.431

NECESSITY, FUNCTION AND CONFORMITY: KRS 156.070 authorizes the Kentucky Board of Education to promulgate administrative regulations necessary for the efficient management, control, and operation of the schools and programs under its jurisdiction. KRS 160.431(2) requires school finance officers to meet certification and continuing education requirements and authorizes the Kentucky Board of Education to promulgate administrative regulations identifying and prescribing the criteria and procedures for school finance officer certification and continuing education. This administrative regulation establishes the standards for school finance officer certification and continuing education.

Section 1. Definitions. (1) "Finance officer" means a person appointed pursuant to KRS 160.431(1).

(2) "Finance officer intern" means any finance officer who has obtained a provisional certificate under Section 3 of this administrative regulation but who has not acquired a full certificate under Section 4 of this administrative regulation.

(3) "Mentor" means an individual approved by the department to oversee a finance officer intern through the Kentucky Finance Officer Internship Program.

Section 2. Initial Qualifications. An individual shall be eligible to be employed as a finance officer on or after July 1, 2015, if the individual:

(1) Is employed on June 30, 2015 as a finance officer in a Kentucky school district and does not have an employment break in service as a finance officer. A break in service as a finance officer in any Kentucky school district shall terminate the individual's qualification for employment as a finance officer under this subsection; or

(2) Obtains a provisional or full certificate under Section 3 or 4 of this administrative regulation.

Section 3. Provisional Certification. (1) An individual who is seeking to be employed as a finance officer in a Kentucky school district who does not meet the requirements of Section 2(1) of this administrative regulation and who does not possess a full certificate shall secure a provisional certificate by submitting the Provisional Certification Application Form, KDE-FOCP-1, to the department to verify the individual meets the following eligibility requirements:

(a) A minimum of a bachelor's degree from any accredited postsecondary institution; and

(b)1. A minimum of twelve (12) credit hours in accounting coursework from any accredited postsecondary institution;

2. A minimum of four (4) years' work experience primarily in accounting or finance, confirmed by the district of employment; or

3. A minimum of two (2) years' work experience in finance in a local school district, confirmed by the district of employment.

(2) The department shall issue a provisional certificate to an individual providing proof of the eligibility requirements of subsection (1) of this section and proof of an offer of employment as a finance officer in a Kentucky school district.

(3) A finance officer provisional certificate shall be in effect until:

(a) The individual obtains full certification;

(b) The individual fails to provide to the department the proof of progress toward full certification required by subsection (4) of this section; or

(c) Five (5) years have passed since the provisional certificate's issuance date.

(4) The provisional certificate holder shall annually submit proof of progress toward full certification to the department by the anniversary of the issuance date of the provisional certificate. Failure to provide this annual proof of progress or to obtain full certification within five (5) years of the issuance of a provisional certificate shall result in the loss of the provisional certificate.

Section 4. Full Certification. (1) An individual who is eligible for employment as a finance officer under Section 2(2) of this administrative regulation shall apply for full certification prior to the expiration of the provisional certificate by submitting the Full Certification Application Form, KDE-FOCP-2, to the department to verify:

(a) Current provisional certification;

(b) Completion of the Kentucky Finance Officer Internship Program (KFIP) under Section 5 of this administrative regulation;

(c) Fifteen (15) hours of finance officer training from the Finance Officer Curriculum, KDE-FOCP-6, provided by a department-approved training provider; and

(d) Twelve (12) hours of training in the state-approved school district financial software package provided by a department-approved training provider.

(2) A full certificate shall be renewed automatically unless the finance officer fails to meet the biennial continuing education requirements of Section 6 of this administrative regulation.

Section 5. Kentucky Finance Officer Internship Program (KFIP). (1) Within thirty (30) days of employment as a finance officer, the provisionally certified finance officer shall apply for participation in the KFIP.

(2) The KFIP Assessment Committee shall consist of:

(a) The mentor assigned by the department;

(b) The employing district's superintendent or designee; and

(c) A department representative.

(3) Mentors shall meet the following qualification requirements:

(a) Possess full certification under this administrative regulation or meet the requirements of Section 2(1) of this administrative regulation;

(b) Complete the department's mentor training; and

(c) Complete the Mentor Application Form, KDE-FOCP-5.

(4) Mentors shall:

(a) Work with finance officer interns to develop a chronological task plan based on the Finance Officer Curriculum, KDE-FPCO-6;

(b) Continue the mentorship for a period of twelve (12) consecutive months;

(c) Document the time spent mentoring and a summary of the content on form KDE-FOCP-3;

(d) Document attendance by the finance officer intern at any mentoring meetings during the internship; and

(e) Serve as a mentor for no more than two (2) individuals concurrently.

(5) Mentors shall be eligible to earn, as a mentor, a maximum of twenty-one (21) hours of continuing education, not to exceed one (1) hour per month, during the mentorship, toward the requirement of KRS 160.431(3) for the mentor training and mentor contact.

(6) Mentors shall be eligible to receive from available funds an annual stipend, not to exceed $1,000 each fiscal year per individual mentored, from the department for the mentorship. A district may also choose to reimburse the mentor for any expenses, including travel.

(7) The KFIP Assessment Committee shall:

(a) Assist in the development of the intern's chronological task plan required in subsection (4)(a) of this section;

(b) Meet six (6) months after the initiation of the internship to assess progress;

(c) Assess whether the finance officer intern completed the internship; and

(d) Complete the Assessment Committee Report Form, KDE-FOCP-4.

(8) As part of its assessment, the KFIP Assessment Committee shall consider:

(a) Documentation provided by the mentor;

(b) The recommendation of the finance officer intern's superintendent based on actual work performance; and

(c) The report by the department of work product submissions and interactions.

(9) At the end of the internship, the KFIP Assessment Committee shall do one (1) of the following:

(a) Declare the internship completed;

(b) Require the finance officer intern to repeat a portion of the internship curriculum; or

(c) Require the finance officer intern to repeat the entire internship curriculum.

(10) The finance officer intern may request a different mentor if the KFIP Assessment Committee requires the internship to be repeated.

(11) The mentor may request to be replaced by another mentor if the KFIP Assessment Committee requires the internship to be repeated.

Section 6. Continuing Education. (1) Fully certified finance officers and those qualified under Section 2(1) of this administrative regulation shall meet the continuing education requirements of KRS 160.431(3).

(2) Each finance officer shall complete at least twelve (12) hours of continuing education by June 30 of each fiscal year.

Section 7. Revocation and Appeal for Reinstatement of Full Certification. (1)(a) Failure to meet the annual requirement of twelve (12) hours of continuing education of Section 6(2) of this administrative regulation shall result in a temporary suspension of a finance officer's full certification.

(b) The department shall notify the district superintendent of the temporary suspension.

(c) The certificate holder shall complete the required number of hours of continuing education by the end of the biennial period.

(d) Three (3) temporary suspensions shall result in revocation of the full certification.

(2) Failure to meet the biennial requirement of forty-two (42) hours of continuing education shall result in revocation of the full certification.

(3) The certificate holder may appeal to the department for reinstatement of a provisional or full certification which has been revoked under subsections (1) or (2) of this section if:

(a) The certificate holder requests reinstatement and provides supporting documentation to the department; and

(b) The certificate holder has fulfilled all requirements of the provisional or full certification including the required continuing education for the latest fiscal year.

(4) The department shall review and make a determination regarding reinstatement within thirty (30) days of receipt of the appeal.

Section 8. Grandfather Status. (1) An individual who is eligible for grandfather status pursuant to Section 2(1) of this administrative regulation shall submit the Provisional Certification Application Form, KDE-FOCP-1, to the department.

(2) An individual with grandfather status may obtain full certification if either:

(a) The department approves the individual as a mentor in the KFIP in accordance with the requirements of this administrative regulation; or

(b) The individual meets all provisional and full certification requirements, including successful completion of the KFIP.

Section 9. Incorporation by Reference. (1) The following material is incorporated by reference:

(a) "Provisional Certification Application", FOCP-1, July 2015;

(b) "Full Certification Application", FOCP-2, July 2015;

(c) "Intern Progress Report", FOCP-3, July 2015;

(d) "Assessment Committee Report", FOCP-4, July 2015;

(e) "Mentor Application", FOCP-5, July 2015; and

(f) "Finance Officer Curriculum", FOCP-6, July 2015.

(2) This material may be inspected, copied, or obtained, subject to applicable copyright law, at the Department of Education, 500 Mero Street, First Floor, Capital Plaza Tower, Frankfort, Kentucky 40601, Monday through Friday, 8 a.m. to 4:30 p.m.

This is to certify that the chief state school officer has reviewed and recommended this administrative regulation prior to its adoption by the Kentucky Board of Education, as required by KRS 156.070(5).

TERRY HOLLIDAY, Ph.D., Commissioner of Education
ROGER L. MARCUM, Chairperson

APPROVED BY AGENCY: December 15, 2014

FILED WITH LRC: December 15, 2014 at 10 a.m.

PUBLIC HEARING AND PUBLIC COMMENT PERIOD: A public hearing on this proposed administrative regulation shall be held on January 28, 2015, at 10 a.m. in the State Board Room, First Floor, Capital Plaza Tower, 500 Mero Street, Frankfort, Kentucky. Individuals interested in being heard at this meeting shall notify this agency in writing five working days prior to the hearing, of their intent to attend. If no notification of intent to attend the hearing is received by that date, the hearing may be canceled. This hearing is open to the public. Any person who wishes to be

heard will be given an opportunity to comment on the proposed administrative regulation. A transcript of the public hearing will not be made unless a written request for a transcript is made. If you do not wish to be heard at the public hearing, you may submit written comments on the proposed administrative regulation. Written comments shall be accepted until close of business February 2, 2015. Send written notification of intent to be heard at the public hearing or written comments on the proposed administrative regulation to:

CONTACT PERSON: Kevin C. Brown, Associate Commissioner and General Counsel, Kentucky Department of Education, 500 Mero Street, First Floor, Capital Plaza Tower, Frankfort, Kentucky 40601, phone 502-564-4474, fax 502-564-9321.

REGULATORY IMPACT ANALYSIS AND TIERING STATEMENT

Contact Person: Kevin C. Brown

(1) Provide a brief summary of:

(a) What this administrative regulation does: This administrative regulation establishes standards for certification of school finance officers and sets the requirements for continuing education to maintain the certification.

(b) The necessity of this administrative regulation: KRS 160.431(2) provides that school finance officers shall obtain certification and continuing education and that the agency shall identify the criteria for certification and continuing education. KRS 161.020(1)(b) prohibits a school district from employing an individual to serve as finance officer after July 1, 2015 if the individual has not met the certification requirements of this administrative regulation.

(c) How this administrative regulation conforms to the content of the authorizing statute: This administrative regulation establishes the requirements mandated by KRS 160.431 and 161.020(1)(b).

(d) How this administrative regulation currently assists or will assist in the effective administration of the statutes: This administrative regulation establishes the certification standards and the eligibility requirements for school finance officers at the local school district.

(2) If this is an amendment to an existing administrative regulation, provide a brief summary of:

(a) How the amendment will change this existing administrative regulation: Inapplicable

(b) The necessity of the amendment to this administrative regulation: Inapplicable

(c) How the amendment conforms to the content of the authorizing statute: Inapplicable

(d) How the amendment will assist in the effective administration of the statutes: Inapplicable

(3) List the type and number of individuals, businesses, organizations, or state and local governments affected by this administrative regulation: All Kentucky public school districts

(4) Provide an analysis of how the entities identified in question (3) will be impacted by either the implementation of this administrative regulation, if new, or by the change, if it is an amendment, including: This administrative regulation establish certification and continuing education requirements for any school finance officers hired on or after July 1, 2015.

(a) List the actions that each of the regulated entities identified in question (3) will have to take to comply with this administrative regulation or amendment: A school district shall have to comply with the requirements in this administrative regulation for certification and pay for the mentorship of a school finance officer intern in that district, if applicable.

(b) In complying with this administrative regulation or amendment, how much will it cost each of the entities identified in question (3): There are no mandated costs with this administrative regulation. Districts are encouraged to facilitate mentorships at minimal cost.

(c) As a result of compliance, what benefits will accrue to the entities identified in question (3): More consistency in the quality and training of school finance officers across the state.

(5) Provide an estimate of how much it will cost the administrative body to implement this administrative regulation:

(a) Initially: Minimal

(b) On a continuing basis: Minimal

(6) What is the source of the funding to be used for the implementation and enforcement of this administrative regulation: General funds

(7) Provide an assessment of whether an increase in fees or funding will be necessary to implement this administrative regulation, if new, or by the change if it is an amendment: No increase will be necessary.

(8) State whether or not this administrative regulation establishes any fees or directly or indirectly increases any fees: This administrative regulation does not establish fees or directly or indirectly increase any fees.

(9) TIERING: Is tiering applied? No, tiering does not apply because the requirements of this administrative regulation apply to all Kentucky school districts.

FISCAL NOTE ON STATE OR LOCAL GOVERNMENT

(1) What units, parts, or divisions of state or local government (including cities, counties, fire departments, or school districts) will be impacted by this administrative regulation? All Kentucky public school districts

(2) Identify each state or federal statute or federal regulation that requires or authorizes the action taken by the administrative regulation. KRS 156.070, 160.431, 161.020(1)(b).

(3) Estimate the effect of this administrative regulation on the expenditures and revenues of a state or local government agency (including cities, counties, fire departments, or school districts) for the first full year the administrative regulation is to be in effect.

(a) How much revenue will this administrative regulation generate for the state or local government (including cities, counties, fire departments, or school districts) for the first year? None

(b) How much revenue will this administrative regulation generate for the state or local government (including cities, counties, fire departments, or school districts) for subsequent years? None

(c) How much will it cost to administer this program for the first year? No cost

(d) How much will it cost to administer this program for subsequent years? No cost

Note: If specific dollar estimates cannot be determined, provide a brief narrative to explain the fiscal impact of the administrative regulation.

Revenues (+/-):

Expenditures (+/-):

Other Explanation:

ADMINISTRATIVE REGULATION REVIEW SUBCOMMITTEE
Minutes of December 9, 2014

Call to Order and Roll Call

The December 2014 meeting of the Administrative Regulation Review Subcommittee was held on Tuesday, December, 9 2014, at 1:00 p.m., in Room 149 of the Capitol Annex. Senator Ernie Harris, Co-Chair, called the meeting to order, the roll call was taken. The minutes of the November 2014 meeting were approved.

Present were:

Members: Senators Perry Clark, Sara Beth Gregory, Ernie Harris, and Alice Forgy Kerr; and Representatives Robert Damron, and Jimmie Lee.

LRC Staff: Donna Little, Emily Caudill, Sarah Amburgey, Carrie Klaber, Karen Howard, Emily Harkenrider, Ange Bertholf, and Betsy Cupp.

Guests: Becky Gilpatrick, Carl Rollins, Kentucky Higher Education Assistance Authority; Alicia Snead; Education Professional Standards Board, Jennifer Jones, Brian Thomas, Retirement Systems; Peggy Guier, Craig Potts, Scot Walters, Kentucky Heritage Council; Ron Brooks, Karen Waldrop, David Wicker, Department of Fish and Wildlife; Larry Roberts, Chip Smith, Labor Cabinet; Marc Guilfoil, Susan Speckert, Horse Racing Commission; Mitch Buchanan, Brian Judy, Board of home Inspectors; Diona Mullins, Office of Health Policy; Carrie Banahan, Chandra Venettozzi, Office of Health Benefit and Health Information Exchange; Laura Begin, Matt McKinley, Gary Kupchinsky, Paul Royce, Department for Public Health; Leslie Hoffmann, Stuart Owen, Department of Medicaid Services; Cathy Lester, Mike Weinrauch, Commission for Children with Special Health Care Needs; Christa Bell, Elizabeth Caywood, Pam Cotton, Steven Fisher, Jennie Willson, Department for Community Based Services.

The Administrative Regulation Review Subcommittee met on Tuesday, December 9, 2014, and submits this report:

Administrative Regulations Reviewed by the Subcommittee:

KENTUCKY HIGHER EDUCATION ASSISTANCE AUTHORITY: Division of Student and Administrative Services: Kentucky Loan Program

11 KAR 3:100. Administrative wage garnishment. Becky Gilpatrick, director of student services, and Carl Rollins II, executive director, represented the division.

A motion was made and seconded to approve the following amendments: to amend Sections 1, 2, 4, and 5 to comply with the drafting requirements of KRS Chapter 13A. Without objection, and with agreement of the agency, the amendments were approved.

Authority

11 KAR 4:080. Student aid applications.

A motion was made and seconded to approve the following amendments: (1) to amend the RELATES TO and STATUTORY AUTHORITY paragraphs to correct citations; and (2) to amend the NECESSITY, FUNCTION, AND CONFORMITY paragraph to clearly state the necessity for and function served by this administrative regulation, as required by KRS 13A.220. Without objection, and with agreement of the agency, the amendments were approved.

KHEAA Grant Programs

11 KAR 5:001. Definitions pertaining to 11 KAR Chapter 5.

A motion was made and seconded to approve the following amendments: to amend Section 1 to: (1) add a definition; and (2) comply with the drafting and formatting requirements of KRS Chapter 13A. Without objection, and with agreement of the agency, the amendments were approved.

11 KAR 5:033. KTG student eligibility requirements.

A motion was made and seconded to approve the following amendments: to amend Section 1 to comply with the drafting requirements of KRS Chapter 13A. Without objection, and with agreement of the agency, the amendments were approved.

11 KAR 5:034. CAP grant student eligibility.

A motion was made and seconded to approve the following amendments: to amend Section 1 to comply with the drafting requirements of KRS Chapter 13A. Without objection, and with agreement of the agency, the amendments were approved.

11 KAR 5:170. Refund and repayment policy.

In response to a question by Co-Chair Harris, Ms. Gilpatrick stated that need-based scholarships were the program's top priority so refunds of need-based scholarships were prioritized ahead of others. This enabled KHEAA to offer funds to more students in need.

A motion was made and seconded to approve the following amendments: (1) to amend the NECESSITY, FUNCTION, AND CONFORMITY paragraph to correct citations; and (2) to amend Section 3 to comply with the drafting requirements of KRS Chapter 13A. Without objection, and with agreement of the agency, the amendments were approved.

Teacher Scholarship Loan Program

11 KAR 8:030. Teacher scholarships.

A motion was made and seconded to approve the following amendments: (1) to amend Sections 3, 5, 8, 10, and 11 to comply with the drafting requirements of KRS Chapter 13A. Without objection, and with agreement of the agency, the amendments were approved.

Kentucky Educational Excellence Scholarship Program

11 KAR 15:060. Kentucky Educational Excellence Scholarship overpayment and refund and repayment procedure.

A motion was made and seconded to approve the following amendments: (1) to amend the NECESSITY, FUNCTION, AND CONFORMITY paragraph to correct citations; and (2) to amend Sections 3 and 6 to comply with the drafting requirements of KRS Chapter 13A. Without objection, and with agreement of the agency, the amendments were approved.

11 KAR 15:090. Kentucky Educational Excellence Scholarship (KEES) program.

In response to a question by Co-Chair Harris, Mr. Rollins stated that the division anticipated the need for increased funding over the next six (6) years as a result of program changes. The division anticipated at $4.5 million increase in funding needs by six (6) years from the effective date of this administrative regulation. Funding was from the lottery, and lottery revenue was expected to keep pace with the increased funding needs.

A motion was made and seconded to approve the following amendments: to amend Sections 1, 3, 4, 5, and 7 to comply with the drafting requirements of KRS Chapter 13A. Without objection, and with agreement of the agency, the amendments were approved.

Coal County Scholarship Program for Pharmacy Students

11 KAR 19:010. Coal County Scholarship Program for pharmacy students.

A motion was made and seconded to approve the following amendments: to amend Sections 1, 5, 6, and 7 to comply with the drafting requirements of KRS Chapter 13A. Without objection, and with agreement of the agency, the amendments were approved.

Coal County College Completion Program

11 KAR 20:001. Definitions for 11 KAR Chapter 20.

In response to a question by Co-Chair Harris, Mr. Rollins stated that this administrative regulation was amended commensurate with a statutory revision to clarify that a recipient of

the scholarship shall be a resident or former resident of a coal-producing county. Previously, the scholarship was awarded to someone who was not from a coal-producing county but who agreed to work in a coal-producing county after graduation.

A motion was made and seconded to approve the following amendments: (1) to amend the STATUTORY AUTHORITY paragraph to correct citations; (2) to amend the NECESSITY, FUNCTION, AND CONFORMITY paragraph to clearly state the necessity for and function served by this administrative regulation, as required by KRS 13A.220; and (3) to amend Section 1 to comply with the drafting requirements of KRS Chapter 13A. Without objection, and with agreement of the agency, the amendments were approved.

11 KAR 20:010. Student eligibility requirements.

A motion was made and seconded to approve the following amendments: (1) to amend the STATUTORY AUTHORITY paragraph to correct citations; (2) to amend the NECESSITY, FUNCTION, AND CONFORMITY paragraph to clearly state the necessity for and function served by this administrative regulation, as required by KRS 13A.220; and (3) to amend Section 1 to: (a) establish that a student may appeal the denial of the award in accordance with 11 KAR 4:030; and (b) comply with the drafting requirements of KRS Chapter 13A. Without objection, and with agreement of the agency, the amendments were approved.

11 KAR 20:020. Application and certification.

A motion was made and seconded to approve the following amendments: (1) to amend the STATUTORY AUTHORITY paragraph to correct citations; (2) to amend the NECESSITY, FUNCTION, AND CONFORMITY paragraph to clearly state the necessity for and function served by this administrative regulation, as required by KRS 13A.220; (3) to amend Section 1 to clarify that the scholarship application shall be completed online from the KHEAA Web site; (4) to amend Section 2 to establish that the deadline for certification to be completed and submitted to authority shall be no later than June 30 for consistency with 11 KAR 20:001; and (5) to amend Sections 1 and 2 to comply with the drafting requirements of KRS Chapter 13A. Without objection, and with agreement of the agency, the amendments were approved.

11 KAR 20:030. Award determination procedure.

A motion was made and seconded to approve the following amendments: (1) to amend the STATUTORY AUTHORITY paragraph to correction citations; (2) to amend the NECESSITY, FUNCTION, AND CONFORMITY paragraph to clearly state the necessity for and function served by this administrative regulation, as required by KRS 13A.220; (3) to amend Section 2 to clarify how full and part-time enrollment status shall be determined for eligibility based upon the number of credit hours in which an eligible student is enrolled in accordance with 34 C.F.R. 668.2; and (4) to amend Sections 1 and 2 to comply with the drafting requirements of KRS Chapter 13A. Without objection, and with agreement of the agency, the amendments were approved.

11 KAR 20:040. Disbursement.

A motion was made and seconded to approve the following amendments: (1) to amend the STATUTORY AUTHORITY paragraph to correct citations; (2) to amend the NECESSITY, FUNCTION, AND CONFORMITY paragraph to clearly state the necessity for and function served by this administrative regulation, as required by KRS 13A.220; and (3) to amend Sections 1 and 3 to comply with the drafting requirements of KRS Chapter 13A. Without objection, and with agreement of the agency, the amendments were approved.

11 KAR 20:050. Refunds and repayment.

A motion was made and seconded to approve the following amendments: (1) to amend the STATUTORY AUTHORITY paragraph to correct citations; (2) to amend the NECESSITY, FUNCTION, AND CONFORMITY paragraph to clearly state the necessity for and function served by this administrative regulation, as required by KRS 13A.220; and (3) to amend Section 3 to comply with the drafting requirements of KRS Chapter 13A. Without objection, and with agreement of the agency, the amendments were approved.

11 KAR 20:060. Records and reports.

A motion was made and seconded to approve the following amendments: (1) to amend the STATUTORY AUTHORITY paragraph to correct citations; and (2) to amend the NECESSITY, FUNCTION, AND CONFORMITY paragraph to clearly state the necessity for and function served by this administrative regulation, as required by KRS 13A.220. Without objection, and with agreement of the agency, the amendments were approved.

11 KAR 20:070. Dual enrollment under consortium agreement.

A motion was made and seconded to approve the following amendments: (1) to amend the STATUTORY AUTHORITY paragraph to correct citations; (2) to amend the NECESSITY, FUNCTION, AND CONFORMITY paragraph to clearly establish the necessity for and function served by this administrative regulation, as required by KRS 13A.220; and (3) to amend Sections 3 and 4 to comply with the drafting requirements of KRS Chapter 13A. Without objection, and with agreement of the agency, the amendments were approved.

EDUCATION PROFESSIONAL STANDARDS BOARD: Educator Preparation

16 KAR 5:060. Literacy program requirements for middle school, high school, grades 5-12, and grades P-12 certification programs. Alicia Sneed, director of legal services, represented the board.

In response to a question by Co-Chair Harris, Ms. Sneed stated that the standards in this administrative regulation were established by a literacy group that was part of the national branch of the international standards association.

A motion was made and seconded to approve the following amendments: to amend Sections 1 and 2 to comply with the drafting requirements of KRS Chapter 13A. Without objection, and with agreement of the agency, the amendments were approved.

FINANCE AND ADMINISTRATION CABINET: Kentucky Retirement Systems: General Rules

105 KAR 1:291. Repeal of 105 KAR 1:290 and 105 KAR 1:360. Jennifer Jones, assistant general counsel, and Brian Thomas, general counsel, represented the systems.

105 KAR 1:410. Kentucky Retirement Systems Health Insurance and Kentucky Retirement Systems Insurance Fund Trust.

A motion was made and seconded to approve the following amendments: (1) to amends the RELATES TO and STATUTORY AUTHORITY paragraphs to correct citations; (2) to amend the NECESSITY, FUNCTION, AND CONFORMITY paragraph to clearly state the necessity for and function served by this administrative regulation, as required by KRS 13A.220; and (3) to amend Sections 1, 2, 3, 5, 6, 7, 9, and 10 to comply with the drafting requirements of KRS Chapter 13A. Without objection, and with agreement of the agency, the amendments were approved.

TOURISM, ARTS AND HERITAGE CABINET: Kentucky Heritage Council: Council

300 KAR 6:010. Historic rehabilitation tax credit certifications. Craig Potts, director, and Scot Walters, site development program manager, represented the council.

A motion was made and seconded to approve the following amendments: (1) to amend the RELATES TO; STATUTORY AUTHORITY; and NECESSITY, FUNCTION, AND CONFORMITY paragraphs and Section 6 to correct citations; (2) to amend the NECESSITY, FUNCTION, AND CONFORMITY paragraph and Sections 1, 5, 6, 8, and 9 to comply with the drafting requirements of KRS Chapter 13A; and (3) to amend Section 11 to revise material incorporated by reference. Without objection, and with agreement of the agency, the amendments were approved.

Department of Fish and Wildlife Resources: Fish

301 KAR 1:015. Boat and motor restrictions. Ron Brooks, fisheries director; Karen Waldrop, deputy commissioner; and David Wicker, general counsel, represented the department.

A motion was made and seconded to approve the following amendments: to amend the NECESSITY, FUNCTION, AND CONFORMITY paragraph and Sections 2 through 7 to comply with the drafting requirements of KRS Chapter 13A. Without objection, and with agreement of the agency, the amendments were approved.

Game

301 KAR 2:140. Requirements for wild turkey hunting.

In response to questions by Co-Chair Harris, Ms. Waldrop stated that the .410 shotgun was appropriate for harvesting wild turkey at close range, especially if youth were involved because the shotgun was easy for youth to operate. The ammunition would be 4, 5, or 6 shotgun shells.

A motion was made and seconded to approve the following amendments: (1) to amend the NECESSITY, FUNCTION, AND CONFORMITY paragraph to clearly state the necessity for and function served by this administrative regulation, as required by KRS 13A.220; (2) to amend Section 1 to add three (3) definitions; and (3) to amend Sections 1 through 7 to comply with the drafting and formatting requirements of KRS Chapter 13A. Without objection, and with agreement of the agency, the amendments were approved.

301 KAR 2:144. Fall wild turkey hunting.

A motion was made and seconded to approve the following amendments: to amend the NECESSITY, FUNCTION, AND CONFORMITY paragraph and Sections 2 and 6 to comply with the drafting requirements of KRS Chapter 13A. Without objection, and with agreement of the agency, the amendments were approved.

LABOR CABINET: Department of Labor: Labor Standards; Wages and Hours

803 KAR 1:010. Registration of apprenticeship programs. Larry Roberts, secretary, and Chip Smith, general counsel, represented the cabinet.

A motion was made and seconded to approve the following amendments: to amend Section 1 through 4 and 7 to comply with the drafting requirements of KRS Chapter 13A. Without objection, and with agreement of the agency, the amendments were approved.

PUBLIC PROTECTION CABINET: Horse Racing Commission: Thoroughbred Racing

810 KAR 1:028. Disciplinary measures and penalties. Marc Guilfoil, director of racing, and Susan Speckert, general counsel, represented the commission.

In response to a question by Co-Chair Harris, Ms. Speckert stated that these administrative regulations were amended to delete language related to license revocation because that provision was already established by statute and another administrative regulation.

A motion was made and seconded to approve the following amendments: (1) to amend Section 4 to align the overage amounts for permitted NSAIDs with 810 KAR 1:018; (2) to amend Sections 1, 2, 4, and 5 to: (a) comply with the drafting requirements of KRS Chapter 13A; and (b) make technical corrections; and (3) to establish Section 12 to incorporate by reference the form to request post-race testing of a claimed horse and the claim blank envelope. Without objection, and with agreement of the agency, the amendments were approved.

Harness Racing

811 KAR 1:095. Disciplinary measures and penalties.

A motion was made and seconded to approve the following amendments: (1) to amend the NECESSITY, FUNCTION, AND CONFORMITY paragraph to clearly state the necessity for and function served by this administrative regulation, as required by KRS 13A.220; (2) to amend Section 5 to align the overage amounts for permitted NSAIDs with 811 KAR 1:090; and (3) to amend Sections 2, 5, 6, and 10 to: (a) comply with the drafting and formatting requirements of KRS Chapter 13A; and (b) make technical corrections. Without objection, and with agreement of the agency, the amendments were approved.

Quarter Horse, Appaloosa and Arabian Racing

811 KAR 2:100. Disciplinary measures and penalties.

A motion was made and seconded to approve the following amendments: (1) to amend Section 4 to align the overage amounts for permitted NSAIDs with 811 KAR 2:096; (2) to amend Sections 1, 2, 4, and 5 to: (a) comply with the drafting requirements of KRS Chapter 13A; and (b) make technical corrections; and (3) to establish Section 12 to incorporate by reference the form to request post-race testing of a claimed horse and the claim blank envelope. Without objection, and with agreement of the agency, the amendments were approved.

Office of Occupations and Professions: Board of Home Inspectors: Board

815 KAR 6:001. Definitions for 815 KAR Chapter 6. Mitch Buchanan, chair, and Brian Judy, assistant attorney general, represented the board.

A motion was made and seconded to approve the following amendments: to amend the RELATES TO and STATUTORY AUTHORITY paragraphs to correct statutory citations. Without objection, and with agreement of the agency, the amendments were approved.

815 KAR 6:010. Home inspector licensing requirements and maintenance of records.

A motion was made and seconded to approve the following amendments: (1) to amend Sections 1, 4 through 7, and 9 to comply with the drafting and formatting requirements of KRS Chapter 13A; and (2) to revise the REGULATORY IMPACT ANALYSIS AND TIERING STATEMENT to correct board responses. Without objection, and with agreement of the agency, the amendments were approved.

815 KAR 6:030. Home inspector standards of conduct.

A motion was made and seconded to approve the following amendments: (1) to amend the STATUTORY AUTHORITY paragraph to correct statutory citations; and (2) to amend Sections 1 and 2 to comply with the drafting and formatting requirements of KRS Chapter 13A. Without objection, and with agreement of the agency, the amendments were approved.

815 KAR 6:090. Procedures for complaints and administrative hearings.

In response to questions by Co-Chair Harris, Mr. Judy stated that KRS Chapter 198B established statutory authority for this administrative regulation. During the public comment period, one (1) commenter expressed concerns regarding administrative due process concerns.

A motion was made and seconded to approve the following amendments: to amend the NECESSITY, FUNCTION, AND CONFORMITY paragraph and Sections 2 through 5 to comply with the drafting requirements of KRS Chapter 13A. Without objection, and with agreement of the agency, the amendments were approved.

815 KAR 6:100. Compensation.

CABINET FOR HEALTH AND FAMILY SERVICES: Office of Health Policy: Certificate of Need

900 KAR 6:060. Timetable for submission of certificate of need applications. Diona Mullins, policy advisor, represented the cabinet.

Representative Lee thanked the cabinet for revising this administrative regulation on behalf of stakeholders.

900 KAR 6:065. Certificate of need application process.

A motion was made and seconded to approve the following

amendment: to amend Section 8(3) to change a date reference from January 1, 2015, to the effective date of the administrative regulation. Without objection, and with agreement of the agency, the amendment was approved.

Office of Health Benefit and Health Information Exchange: Health Benefit Exchange

900 KAR 10:030. Kentucky Health Benefit Exchange Eligibility and Enrollment in a Qualified Health Plan. Carrie Banahan, executive director, and Chandra Venettozzi, health data administrator, represented the cabinet.

In response to a question by Co-Chair Harris, Ms. Banahan stated that the amendment to this administrative regulation reflected federal revisions.

A motion was made and seconded to approve the following amendments: (1) to amend Section 2 to: (a) delete outdated provisions that related to the initial open enrollment period that ended March 31, 2014; and (b) specify what happens to applications if requested information is not submitted within the ninety (90) day period; (2) to amend Section 7 to update provisions that had established an effective date prior to the effective date of this administrative regulation; and (3) to amend Sections 2, 3, 4, 6, and 7 to comply with the drafting and formatting requirements of KRS Chapter 13A. Without objection, and with agreement of the agency, the amendments were approved.

Department for Public Health: Office of Vital Statistics: Vital Statistics

901 KAR 5:025. Kentucky Electronic Death Registration System. Laura Begin, regulation coordinator; Matt McKinley, radiation branch manager; and Paul Royce, State Registrar, Office of Vital Statistics, represented the cabinet.

A motion was made and seconded to approve the following amendments: (1) to amend the NECESSITY, FUNCTION, AND CONFORMITY paragraph to clearly state the necessity for and function served by this administrative regulation, as required by KRS 13A.220; and (2) to amend Section 1 to correct a citation. Without objection, and with agreement of the agency, the amendments were approved.

Division of Prevention and Quality Improvement: Programs for the Underserved

902 KAR 21:010. Eligibility for the Kentucky Physicians Care (KPC) program. Laura Begin, regulation coordinator; Gary Kupchinsky, director, Division of Prevention and Quality Improvement; Matt McKinley, radiation branch manager; and Paul Royce, State Registrar, Office of Vital Statistics, represented the cabinet.

In response to questions by Co-Chair Harris, Mr. Kupchinsky stated that the delay between the time that the statute was amended until this administrative regulation was revised accordingly was due to the time required for internal drafting and review. No public comments were received during the public comment period.

A motion was made and seconded to approve the following amendments: to amend Section 1 to comply with the formatting requirements of KRS Chapter 13A. Without objection, and with agreement of the agency, the amendments were approved.

Division of Public Health Protection and Safety: Radiology

902 KAR 100:010. Definitions for 902 KAR Chapter 100. Laura Begin, regulation coordinator; Matt McKinley, radiation branch manager; and Paul Royce, State Registrar, Office of Vital Statistics, represented the cabinet.

A motion was made and seconded to approve the following amendments: to amend Section 1 to comply with the drafting requirements of KRS Chapter 13A. Without objection, and with agreement of the agency, the amendments were approved.

902 KAR 100:019. Standards for protection against radiation.

A motion was made and seconded to approve the following amendments: to amend the NECESSITY, FUNCTION, AND CONFORMITY paragraph and Sections 2 through 4, 15, 16, 23, 25, and 27 to comply with the drafting requirements of KRS Chapter 13A. Without objection, and with agreement of the agency, the amendments were approved.

902 KAR 100:042. Decommissioning and financial surety.

A motion was made and seconded to approve the following amendments: to amend Sections 3 and 8 through 15 to comply with the drafting and formatting requirements of KRS Chapter 13A. Without objection, and with agreement of the agency, the amendments were approved.

902 KAR 100:058. Specific licenses to manufacture, assemble, repair, or distribute products.

A motion was made and seconded to approve the following amendments: (1) to amend the RELATES TO paragraph to add citations; (2) to amend the NECESSITY, FUNCTION, AND CONFORMITY paragraph to clearly state the necessity for and function served by this administrative regulation, as required by KRS 13A.220; and (3) to amend Sections 1, 2, 4, 5, and 9 through 12 to comply with the drafting and formatting requirements of KRS Chapter 13A. Without objection, and with agreement of the agency, the amendments were approved.

902 KAR 100:070. Transportation of radioactive material.

A motion was made and seconded to approve the following amendments: (1) to amend the RELATES TO paragraph to add citations; (2) to amend the NECESSITY, FUNCTION, AND CONFORMITY paragraph to clearly state the necessity for and function served by this administrative regulation, as required by KRS 13A.220; and (3) to amend Sections 1, 3, 7, 10, 13, 14, 15, 17, 20, 21, 22, and 26 to comply with the drafting requirements of KRS Chapter 13A. Without objection, and with agreement of the agency, the amendments were approved.

902 KAR 100:072. Use of radionuclides in the health arts.

A motion was made and seconded to approve the following amendments: to amend Sections 5, 15, 16, 17, 19, 22, 26, 27, 29, 50, 64, 65, 68, 69, 70, 76, 78, and 79 to comply with the drafting and formatting requirements of KRS Chapter 13A. Without objection, and with agreement of the agency, the amendments were approved.

902 KAR 100:100. Industrial radiography.

A motion was made and seconded to approve the following amendments: to amend the NECESSITY, FUNCTION, AND CONFORMITY paragraph and Sections 1, 14, and 16 to comply with the drafting requirements of KRS Chapter 13A. Without objection, and with agreement of the agency, the amendments were approved.

902 KAR 100:142. Wire line service operations.

A motion was made and seconded to approve the following amendments: to amend the NECESSITY, FUNCTION, AND CONFORMITY paragraph and Sections 5, 13, 17, 22, 24, and 29 to comply with the drafting requirements of KRS Chapter 13A. Without objection, and with agreement of the agency, the amendments were approved.

Department for Medicaid Services: Commissioner's Office: Medicaid Services

907 KAR 1:516E. Repeal of 907 KAR 1:515, 907 KAR 1:520, 907 KAR 1:525, 907 KAR 1:530, 907 KAR 1:550, and 907 KAR 1:555. Stuart Owen, regulation coordinator, and Natalie Kelly, division director, represented the cabinet.

Behavioral Health

907 KAR 15:005 & E. Definitions for 907 KAR Chapter 15.

A motion was made and seconded to approve the following amendments: to amend the RELATES TO paragraph and Section 1 to comply with the drafting requirements of KRS Chapter 13A. Without objection, and with agreement of the agency, the amendments were approved.

Division of Policy and Operations: Behavioral Health

907 KAR 15:020 & E. Coverage provisions and requirements regarding services provided by behavioral health service organizations.

A motion was made and seconded to approve the following amendments: to amend the TITLE and Sections 2, 3, 4, and 6 to comply with the drafting requirements of KRS Chapter 13A. Without objection, and with agreement of the agency, the amendments were approved.

907 KAR 15:025 & E. Reimbursement provisions and requirements regarding behavioral health services provided by behavioral health service organizations.

A motion was made and seconded to approve the following amendments: (1) to amend the TITLE and the NECESSITY, FUNCTION, AND CONFORMITY paragraph to correct typographical errors; and (2) to amend Section 1 to delete provisions that repeated requirements of 907 KAR 15:020. Without objection, and with agreement of the agency, the amendments were approved.

Commission for Children with Special Health Care Needs: Division of Clinical and Augmentative Services: Children with Special Health Care Needs Services

911 KAR 1:085. Early Hearing Detection and Intervention Program. Cathy Lester, program administrator, and Mike Weinrauch, program administer, represented the cabinet.

A motion was made and seconded to approve the following amendments: to amend the RELATES TO; STATUTORY AUTHORITY; and NECESSITY, FUNCTION, AND CONFORMITY paragraphs and Sections 3, 4, and 10 to comply with the drafting and formatting requirements of KRS Chapter 13A. Without objection, and with agreement of the agency, the amendments were approved.

Department for Community Based Services: Division of Protection and Permanency: Child Welfare

922 KAR 1:360 & E. Private child care placement, levels of care, and payment. Christa Bell, assistant director; Elizabeth Caywood, internal policy analyst; and Steven Fisher, branch manager, represented the cabinet.

A motion was made and seconded to approve the following amendments: (1) to amend the RELATES TO; STATUTORY AUTHORITY; and NECESSITY, FUNCTION, AND CONFORMITY paragraphs to correct citations; (2) to amend the NECESSITY, FUNCTION, AND CONFORMITY paragraph to clearly state the necessity for and function served by this administrative regulation, as required by KRS 13A.220; and (3) to amend Sections 1, 2, 4, 5, and 11 to comply with the drafting requirements of KRS Chapter 13A. Without objection, and with agreement of the agency, the amendments were approved.

Division of Protection and Permanency: Adult Services

922 KAR 5:070 & E. Adult protective services.

A motion was made and seconded to approve the following amendments: to amend the RELATES TO paragraph to correct citations. Without objection, and with agreement of the agency, the amendments were approved.

922 KAR 5:120 & E. Caregiver misconduct registry and appeals.

A motion was made and seconded to approve the following amendment: to amend Section 6 to correct a form's edition date. Without objection, and with agreement of the agency, the amendment was approved.

Other Business: Co-Chair Harris thanked subcommittee members who were leaving the General Assembly. A resolution for each member had been prepared.

Co-Chair Harris stated that Representative Lee would be missed by the subcommittee, especially regarding matters pertaining to administrative regulations from the Cabinet for Health and Family Services, in which Representative Lee exhibited unparalleled expertise. Senator Clark stated that Representative Lee had been a champion for his constituents. Representative Lee stated that every legislator should have an opportunity to participate as a member of this important subcommittee because this experience gave a legislator insight into many aspects of government. He emphasized the importance of public input in the administrative regulation process. A motion was made and seconded to adopt the resolution prepared for Representative Lee.

Co-Chair Harris stated that Representative Damron would be missed by the subcommittee He would be especially missed during Appropriations and Revenue negations. Representative Damron stated that it had been his honor to serve the state for twenty-two (22) years. He stated that the voice of the people was the important thing, and he had enjoyed serving on this subcommittee because it had been a primarily bipartisan subcommittee working to improve the lives of all Kentuckians. A motion was made and seconded to adopt the resolution prepared for Representative Damron.

Co-Chair Harris stated that Senator Gregory would be missed by the subcommittee. She had also been an invaluable resource during caucus meetings. She had hit the ground running and raised the bar for new legislators. She had a keen understanding of the law and good judgment regarding policy making. Senator Gregory stated that it had been her privilege to serve and that she had great respect for the hard work and sacrifices made by legislators. She agreed with Representative Lee that every legislator should have an opportunity to participate as a member of this important subcommittee. A motion was made and seconded to adopt the resolution prepared for Senator Gregory.

Co-Chair Harris stated that he hoped all legislators, when leaving service, left with integrity intact, and he was confident that Senator Gregory, Representative Damron, and Representative Lee were leaving with their integrity intact.

The following administrative regulations were deferred to the January 13, 2015, meeting of the Subcommittee:

GENERAL GOVERNMENT CABINET: Board of Medical Licensure: Board

201 KAR 9:310. Continuing medical education.

201 KAR 9:450. Fee schedule regarding acupuncturists.

201 KAR 9:460. Written plan.

JUSTICE AND PUBLIC SAFETY CABINET: Kentucky Law Enforcement Council: Council

503 KAR 1:090. Approval of course curriculums.

TRANSPORTATION CABINET: Kentucky Bicycle and Bikeways Commission: Motorcycle and Bicycle Safety

601 KAR 14:020. Bicycle Safety standards.

Department of Highways: Division of Maintenance: Billboards

603 KAR 10:001. Definitions.

603 KAR 10:010. Static advertising devices.

603 KAR 10:020. Electronic advertising devices.

603 KAR 10:030. Removal of vegetation related to advertising devices.

KENTUCKY COMMUNITY AND TECHNICAL COLLEGE SYSTEM: Kentucky Fire Commission: Commission on Fire Protection Personnel Standards and Education

739 KAR 2:060. Certification and qualifications of fire service instructors.

PUBLIC PROTECTION CABINET: Office of Occupations and Professions: Board of Home Inspectors: Board

815 KAR 6:040. Home inspector prelicensing providers. Brian Judy, assistant general counsel, Mitch Buchanan, chair, represented the board. Mr. Judy requested deferral of these administrative regulations to the January 2015 meeting of the subcommittee. Without objection, and with agreement of the subcommittee, the deferral of these administrative regulations was approved.

815 KAR 6:080. Continuing education provider.

CABINET FOR HEALTH AND FAMILY SERVICES: Department for Medicaid Services: Division of Policy and Operations: Hospital Service Coverage and Reimbursement

907 KAR 10:825. Diagnosis-related group (DRG) inpatient hospital reimbursement.

Behavioral Health

907 KAR 15:075 & E. Reimbursement provisions and requirements for behavioral health services provided by residential crisis stabilization units.

The Subcommittee adjourned at 2:10 p.m. until January 13, 2015, at 1 p.m.

OTHER COMMITTEE REPORTS

COMPILER'S NOTE: In accordance with KRS 13A.290(9), the following reports were forwarded to the Legislative Research Commission by the appropriate jurisdictional committees and are hereby printed in the Administrative Register. The administrative regulations listed in each report became effective upon adjournment of the committee meeting at which they were considered.

INTERIM JOINT COMMITTEE ON HEALTH AND WELFARE
Meeting of December 17, 2014

The following administrative regulations were available for consideration and placed on the agenda of the Interim Joint Committee on Health and Welfare for its meeting of December 17, 2014, having been referred to the Committee on December 3, 2014, pursuant to KRS 13A.290(6):

201 KAR 36:060
201 KAR 36:070
201 KAR 36:080
902 KAR 20:008
902 KAR 20:430 & E
902 KAR 20:440 & E
908 KAR 3:050
908 KAR 3:060

Committee activity in regard to review of the above-referenced administrative regulations is reflected in the minutes of the December 17, 2014 meeting, which are hereby incorporated by reference.

CUMULATIVE SUPPLEMENT

Locator Index - Effective Dates **G - 2**

The Locator Index lists all administrative regulations published in VOLUME 41 of the *Administrative Register of Kentucky* from July 2014 through June 2015. It also lists the page number on which each administrative regulation is published, the effective date of the administrative regulation after it has completed the review process, and other action which may affect the administrative regulation. NOTE: The administrative regulations listed under VOLUME 40 are those administrative regulations that were originally published in VOLUME 40 (last year's) issues of the *Administrative Register of Kentucky* but had not yet gone into effect when the *2014 Kentucky Administrative Regulations Service* was published.

KRS Index **G - 12**

The KRS Index is a cross-reference of statutes to which administrative regulations relate. These statute numbers are derived from the RELATES TO line of each administrative regulation submitted for publication in VOLUME 41 of the *Administrative Register of Kentucky*.

Technical Amendment Index **G - 19**

The Technical Amendment Index is a list of administrative regulations which have had technical, nonsubstantive amendments entered since being published in the 2014 *Kentucky Administrative Regulations Service*. These technical changes have been made by the Regulations Compiler pursuant to KRS 13A.040(9) and (10), 13A.312(2), or 13A.320(1)(d). Since these changes were not substantive in nature, administrative regulations appearing in this index will NOT be published in the *Administrative Register of Kentucky*.

Subject Index **G - 20**

The Subject Index is a general index of administrative regulations published in VOLUME 41 of the *Administrative Register of Kentucky*, and is mainly broken down by agency.

Regulation Number	40 Ky.R. Page No.	Effective Date

VOLUME 40

The administrative regulations listed under VOLUME40 are those administrative regulations that were originally published in Volume 40 (last year's) issues of the Administrative Register but had not yet gone into effect when the 13 bound Volumes were published.

SYMBOL KEY:

* Statement of Consideration not filed by deadline
** Withdrawn before being printed in Register
**** Emergency expired after 180 days
‡ Withdrawn deferred more than twelve months (KRS 13A.300(4) and 13A.315(1)(d))
(r) Repealer regulation: KRS 13A.310-on the effective date of an administrative regulation that repeals another, the regulations compiler shall delete the repealed administrative regulation and the repealing administrative regulation.

EMERGENCY ADMINISTRATIVE REGULATIONS:

(Note: Emergency regulations expire 180 days from the date filed; or 180 days from the date filed plus number of days of requested extension, or upon replacement or repeal, whichever occurs first.)

30 KAR 6:010E	2401	3-24-14
Replaced		See 41 Ky.R.
907 KAR 1:019E	1573	12-30-13
Replaced	2703	7-7-14
907 KAR 1:030E	1581	12-26-13
Replaced	2709	7-7-14
907 KAR 1:038E	1585	12-26-13
Replaced	2712	7-7-14
907 KAR 1:039E	1591	12-26-13
Replaced	2716	7-7-14
907 KAR 1:044E	1595	12-30-13
Replaced	2718	7-7-14
907 KAR 1:045E	1600	12-30-13
Replaced	2721	7-7-14
907 KAR 1:054E	1603	12-30-13
Replaced	2722	7-7-14
907 KAR 1:082E	1617	12-30-13
Replaced	2736	7-7-14
907 KAR 1:604E	1631	12-26-13
Replaced	2749	7-7-14
907 KAR 1:631E	1638	12-26-13
Replaced	2755	7-7-14
907 KAR 1:632E	1642	12-26-13
Replaced	2757	7-7-14
907 KAR 1:913E*(r)*	1646	12-26-13
907 KAR 3:005E	1648	12-26-13
Replaced	2759	7-7-14
907 KAR 8:005E	1655	12-26-13
Replaced	2765	7-7-14
907 KAR 8:010E	1657	
Reprinted	2095	12-26-13
Replaced	2765	7-7-14
907 KAR 8:015E	1660	12-26-13
Replaced	2766	7-7-14
907 KAR 8:020E	1662	12-26-13
Replaced	2767	7-7-14
907 KAR 8:025E	1665	12-26-13
Replaced	2768	7-7-14
907 KAR 8:030E	1668	12-26-13
Replaced	2769	7-7-14
907 KAR 8:035E	1671	12-26-13
Replaced	2770	7-7-14
907 KAR 10:014E	1673	12-26-13
Replaced	2771	7-7-14
907 KAR 12:020E	2109	2-6-14
Withdrawn		7-8-14
907 KAR 13:005E	1677	12-26-13
Replaced	2776	7-7-14
907 KAR 13:010E	1680	12-26-13
Replaced	2776	7-7-14
907 KAR 13:015E	1683	12-26-13
Replaced	2777	7-7-14
907 KAR 15:005E	1686	12-30-13
Replaced	2778	7-7-14
907 KAR 15:010E	1688	
Reprinted	2098	12-30-13
Replaced	2779	7-7-14
907 KAR 15:015E	1691	12-30-13
Replaced	2788	7-7-14
907 KAR 18:001E	2404	3-24-14
Replaced		See 41 Ky.R.
907 KAR 18:005E	2405	3-24-14
Replaced		See 41 Ky.R.
908 KAR 2:240E	2112	2-6-14
Replaced	2793	6-18-14
908 KAR 2:250E	2115	2-6-14
Replaced	2795	6-18-14

ORDINARY ADMINISTRATIVE REGULATIONS:

16 KAR 2:010		
Amended	2584	See 41 Ky.R.
16 KAR 4:060		
Amended	2581	See 41 Ky.R.
30 KAR 6:010	2646	See 41 Ky.R.
102 KAR 1:270		
Amended	2320	
As Amended	2675	7-7-14
102 KAR 1:320		
Amended	2321	
As Amended	2675	7-7-14
103 KAR 43:330		
Amended	2589	See 41 Ky.R.
109 KAR 15:020		
Amended	2194	
As Amended	2411	
As Amended	2678	6-25-14
201 KAR 3:025		
Amended	2325	7-7-14
201 KAR 3:090		
Amended	2326	
As Amended	2678	7-7-14
201 KAR 8:016	2385	
As Amended	2679	See 41 Ky.R.
201 KAR 8:532		
Amended	2328	
As Amended	2680	6-18-14
201 KAR 8:550		
Amended	2332	See 41 Ky.R.
201 KAR 8:562		
Amended	2338	
As Amended	2683	6-18-14
201 KAR 8:571		
Amended	2343	See 41 Ky.R.
201 KAR 9:300		
Repealed	2648	8-1-14
201 KAR 9:301*(r)*	2648	8-1-14
201 KAR 9:305		
Amended	2591	See 41 Ky.R.
201 KAR 9:307		
Amended	2592	See 41 Ky.R.
201 KAR 11:011		
Amended	2810	See 41 Ky.R.
201 KAR 11:105		
Amended	2811	See 41 Ky.R.
201 KAR 11:121		
Amended	2812	See 41 Ky.R.
201 KAR 14:085		

Regulation Number	40 Ky.R. Page No.	Effective Date
Amended	1863	See 41 Ky.R.
201 KAR 14:090		
Amended	2195	
As Amended	2686	7-7-14
201 KAR 14:115		
Amended	1866	
As Amended	2688	7-7-14
201 KAR 18:192		
Amended	2593	See 41 Ky.R.
201 KAR 20:056		
Amended	2596	See 41 Ky.R.
201 KAR 20:057		
Amended	2599	See 41 Ky.R.
201 KAR 20:161		
Amended	2602	See 41 Ky.R.
201 KAR 20:360		
Amended	2346	See 41 Ky.R.
201 KAR 20:370		
Amended	2605	See 41 Ky.R.
201 KAR 20:411		
Amended	2607	See 41 Ky.R.
201 KAR 20:450		
Amended	2609	See 41 Ky.R.
201 KAR 22:040		
Amended	2612	See 41 Ky.R.
201 KAR 22:160		
Amended	2227	See 41 Ky.R.
201 KAR 23:015		
Amended	2614	See 41 Ky.R.
201 KAR 34:060	2387	See 41 Ky.R.
201 KAR 42:035		
Amended	2202	See 41 Ky.R.
201 KAR 42:040		
Amended	2204	See 41 Ky.R.
201 KAR 42:060		
Amended	2206	See 41 Ky.R.
201 KAR 42:080		
Amended	2207	See 41 Ky.R.
201 KAR 42:110		
Amended	2210	See 41 Ky.R.
201 KAR 43:100	2649	See 41 Ky.R.
301 KAR 1:201		
Amended	2814	See 41 Ky.R.
301 KAR 2:132		
Amended	2349	
As Amended	2689	7-7-14
301 KAR 2:300		
Amended	2615	See 41 Ky.R.
500 KAR 8:030		
Amended	2219	
As Amended	2692	7-7-14
501 KAR 6:020		
Amended	2353	See 41 Ky.R.
501 KAR 6:110		
Amended	2819	See 41 Ky.R.
505 KAR 1:110		
Amended	2821	See 41 Ky.R.
600 KAR 6:040		
Amended	2355	7-1-14
601 KAR 1:230	2389	
As Amended	2694	7-1-14
601 KAR 14:020		
Amended	2223	
603 KAR 10:001	2019	
Amended	2453	
603 KAR 10:010		
Amended	1889	
Amended	2456	
603 KAR 10:020	2022	
Amended	2474	
603 KAR 10:030	2027	
Amended	2478	
702 KAR 7:065		
Amended	2618	See 41 Ky.R.
704 KAR 3:345		
Repealed	2925	8-11-14
704 KAR 3:346*(r)*	2925	8-11-14
704 KAR 3:370	2651	See 41 Ky.R.
739 KAR 2:090	2231	
Amended	2798	See 41 Ky.R.
803 KAR 2:300		
Amended	2823	9-5-14
803 KAR 2:306		
Amended	2825	9-5-14
803 KAR 2:308		
Amended	2828	9-5-14
803 KAR 2:309		
Amended	2830	9-5-14
803 KAR 2:314		
Amended	2832	9-5-14
803 KAR 2:317		
Amended	2834	9-5-14
803 KAR 2:318		
Amended	2837	9-5-14
803 KAR 2:400		
Amended	2839	See 41 Ky.R.
803 KAR 2:404		
Amended	2841	9-5-14
803 KAR 2:406		
Amended	2843	See 41 Ky.R.
803 KAR 2:412		
Amended	2845	See 41 Ky.R.
803 KAR 2:421		
Amended	2849	9-5-14
803 KAR 2:423		
Amended	2851	9-5-14
803 KAR 2:500		
Amended	2852	9-5-14
803 KAR 2:505		
Amended	2854	See 41 Ky.R.
803 KAR 2:550		
Repealed	2926	9-5-14
803 KAR 2:551*(r)*	2926	9-5-14
803 KAR 50:010		
Amended	1440	
As Amended	2695	7-7-14
804 KAR 1:051*(r)*	2391	7-7-14
804 KAR 1:100		
Amended	2857	9-5-14
804 KAR 9:050		
Amended	2358	
As Amended	2702	7-7-14
804 KAR 11:040	2927	10-3-14
806 KAR 30:020		
Amended	2622	See 41 Ky.R.
806 KAR 38:100		
Amended	2623	See 41 Ky.R.
806 KAR 47:010		
Amended	2629	See 41 Ky.R.
815 KAR 7:120		
Amended	2630	8-1-14
815 KAR 7:125		
Amended	2633	8-1-14
900 KAR 6:055		
Amended	2858	See 41 Ky.R.
900 KAR 6:070		
Amended	2860	See 41 Ky.R.
900 KAR 6:075		
Amended	2862	See 41 Ky.R.
900 KAR 7:030		
Amended	2865	See 41 Ky.R.
902 KAR 30:001		
Amended	2869	See 41 Ky.R.
902 KAR 30:110		

Regulation Number	40 Ky.R. Page No.	Effective Date
Amended	2872	See 41 Ky.R.
902 KAR 30:120		
Amended	2876	See 41 Ky.R.
902 KAR 30:130		
Amended	2879	See 41 Ky.R.
902 KAR 30:150		
Amended	2883	See 41 Ky.R.
902 KAR 30:160		
Amended	2887	10-15-14
902 KAR 30:180		
Amended	2889	See 41 Ky.R.
902 KAR 30:200		
Amended	2893	10-15-14
902 KAR 55:045		
Amended	2635	See 41 Ky.R.
902 KAR 55:090		
Amended	2639	9-17-14
907 KAR 1:019		
Amended	1933	
As Amended	2703	7-7-14
907 KAR 1:030		
Amended	1941	
As Amended	2709	7-7-14
907 KAR 1:038		
Amended	1945	
Amended	2481	
As Amended	2712	7-7-14
907 KAR 1:039		
Amended	1951	
As Amended	2716	7-7-14
907 KAR 1:044		
Amended	1955	
Amended	2487	
As Amended	2718	7-7-14
907 KAR 1:045		
Amended	1959	
Amended	2492	
As Amended	2721	7-7-14
907 KAR 1:054		
Amended	1962	
Amended	2495	
As Amended	2722	7-7-14
907 KAR 1:082		
Amended	1977	
Amended	2510	
As Amended	2736	7-7-14
907 KAR 1:604		
Amended	1991	
Amended	2524	
As Amended	2749	7-7-14
907 KAR 1:631		
Amended	1998	
Amended	2532	
As Amended	2755	7-7-14
907 KAR 1:632	2034	
Amended	2536	
As Amended	2757	7-7-14
907 KAR 1:835		
Amended	2899	See 41 Ky.R.
907 KAR 3:005		
Amended	2002	
Amended	2540	
As Amended	2759	7-7-14
907 KAR 8:005	2038	
As Amended	2765	7-7-14
907 KAR 8:010	2040	
As Amended	2765	7-7-14
907 KAR 8:015	2043	
Amended	2547	
As Amended	2766	7-7-14
907 KAR 8:020	2045	
As Amended	2767	7-7-14
907 KAR 8:025	2048	
Amended	2550	
As Amended	2768	7-7-14
907 KAR 8:030	2051	
As Amended	2769	7-7-14
907 KAR 8:035	2054	
Amended	2552	
As Amended	2770	7-7-14
907 KAR 10:014		
Amended	2009	
Amended	2554	
As Amended	2771	7-7-14
907 KAR 10:825		
Amended	1491	
Amended	2305	
907 KAR 13:005	2056	
As Amended	2776	7-7-14
907 KAR 13:010	2058	
Amended	2560	
As Amended	2776	7-7-14
907 KAR 13:015	2062	
As Amended	2777	7-7-14
907 KAR 15:005	2064	
Amended	2564	
As Amended	2778	7-7-14
907 KAR 15:010	2066	
Amended	2566	
As Amended	2779	7-7-14
907 KAR 15:015	2076	
Amended	2577	
As Amended	2788	7-7-14
907 KAR 18:001	2658	See 41 Ky.R.
907 KAR 18:005	2660	See 41 Ky.R.
908 KAR 2:240	2234	
As Amended	2793	6-18-14
908 KAR 2:250	2236	
As Amended	2795	6-18-14
910 KAR 2:040		
Amended	2361	
AmComments	2801	See 41 Ky.R.
921 KAR 1:430		
Amended	2642	8-1-14
921 KAR 2:055		
Amended	2369	See 41 Ky.R.
921 KAR 2:060		
Amended	2910	9-5-14
921 KAR 3:030		
Amended	2912	9-5-14
921 KAR 3:042		
Amended	2914	9-5-14
921 KAR 3:050		
Amended	2917	9-5-14
921 KAR 3:060		
Amended	2921	9-5-14
921 KAR 3:070		
Amended	2373	See 41 Ky.R.
922 KAR 1:320		
Amended	2377	See 41 Ky.R.
922 KAR 1:480		
Amended	2382	9-5-14

Regulation Number	41 Ky.R. Page No.	Effective Date

VOLUME 41

SYMBOL KEY:
* Statement of Consideration not filed by deadline
** Withdrawn before being printed in Register
**** Emergency expired after 180 days
(r) Repealer regulation: KRS 13A.310-on the effective date of an administrative regulation that repeals another, the regulations compiler shall delete the repealed administrative regulation and the repealing administrative regulation.

EMERGENCY ADMINISTRATIVE REGULATIONS:
(Note: Emergency regulations expire 180 days from the date filed; or 180 days from the date filed plus number of days of requested extension, or upon replacement or repeal, whichever occurs first.)

30 KAR 6:010E		See 40 Ky.R.
Replaced	10	8-1-14
31 KAR 4:130E	367	7-22-14
31 KAR 4:140E	372	7-22-14
31 KAR 5:010E	375	7-22-14
101 KAR 2:210	717	9-15-14
103 KAR 15:180E	4	6-5-14
Replaced	439	10-3-14
301 KAR 2:221E	1300	10-27-14
301 KAR 2:222E	1302	10-27-14
301 KAR 2:225E	719	8-22-14
405 KAR 8:030E	379	8-6-14
405 KAR 8:040E	389	8-6-14
405 KAR 10:025E	235	6-30-14
601 KAR 1:112E	1481	12-5-14
804 KAR 4:230E	237	7-15-14
Replaced	761	10-31-14
804 KAR 4:400E	239	7-15-14
Replaced	762	10-31-14
804 KAR 4:410E	240	7-15-14
Replaced	762	10-31-14
902 KAR 20:430E	242	7-15-14
902 KAR 20:440E	250	7-15-14
907 KAR 1:516E*(r)*	995	9-16-14
907 KAR 3:005E	721	8-20-14
907 KAR 15:005E	401	7-22-14
907 KAR 15:020E	404	7-22-14
907 KAR 15:025E	413	7-22-14
907 KAR 15:040E	996	9-16-14
907 KAR 15:045E	1002	9-16-14
907 KAR 15:050E	1004	9-16-14
907 KAR 15:055E	1010	9-16-14
907 KAR 15:060E	1012	9-16-14
907 KAR 15:065E	1018	9-16-14
907 KAR 15:070E	727	8-20-14
907 KAR 15:075E	732	8-20-14
907 KAR 18:001E		See 40 Ky.R.
Replaced	44	8-1-14
907 KAR 18:005E		See 40 Ky.R.
Replaced	44	8-1-14
922 KAR 1:360E	417	8-1-14
922 KAR 2:160E	423	8-1-14
	1021	10-15-14
922 KAR 5:070E	432	7-23-14
922 KAR 5:120E	436	7-23-14

ORDINARY ADMINISTRATIVE REGULATIONS:

11 KAR 3:100		
Amended	817	
As Amended	1485	
11 KAR 4:080		
Amended	1124	
As Amended	1493	
11 KAR 5:001		
Amended	828	
As Amended	1494	
11 KAR 5:033		
Amended	831	
As Amended	1496	
11 KAR 5:034		
Amended	832	
As Amended	1496	
11 KAR 5:170		
Amended	834	
As Amended	1497	
11 KAR 8:030		
Amended	835	
As Amended	1497	
11 KAR 15:060		
Amended	839	
As Amended	1500	
11 KAR 15:090		
Amended	1125	
As Amended	1501	
11 KAR 16:001		
Amended	841	
Withdrawn		12-1-14
11 KAR 16:010		
Amended	843	
Withdrawn		12-1-14
11 KAR 19:010		
Amended	1130	
As Amended	1504	
11 KAR 20:001	1240	
As Amended	1506	
11 KAR 20:010	1241	
As Amended	1506	
11 KAR 20:020	1242	
As Amended	1507	
11 KAR 20:030	1244	
As Amended	1507	
11 KAR 20:040	1245	
As Amended	1508	
11 KAR 20:050	1246	
As Amended	1508	
11 KAR 20:060	1248	
As Amended	1509	
11 KAR 20:070	1249	
As Amended	1509	
16 KAR 2:010		See 40 Ky.R.
As Amended	8	8-1-14
16 KAR 2:120		
Amended	533	
16 KAR 4:060		See 40 Ky.R.
As Amended	256	9-5-14
16 KAR 5:060	1251	
As Amended	1510	
16 KAR 6:010		
Amended	1698	
16 KAR 9:080		
Amended	295	
As Amended	736	10-31-14
30 KAR 6:010		See 40 Ky.R.
As Amended	10	8-1-14
31 KAR 3:030	669	
As Amended	1031	
31 KAR 4:130		
Amended	536	
As Amended	1031	
31 KAR 4:140		
Amended	541	
As Amended	1033	
31 KAR 5:010		
Amended	544	
As Amended	1035	

LOCATOR INDEX - EFFECTIVE DATES

Regulation Number	41 Ky.R. Page No.	Effective Date
101 KAR 2:210		
Amended	845	
103 KAR 15:180		
Amended	85	
As Amended	439	
103 KAR 43:330		See 40 Ky.R.
As Amended	12	8-1-14
105 KAR 1:291	1253	
105 KAR 1:410	1254	
As Amended	1511	
200 KAR 1:015	670	
As Amended	1308	
200 KAR 40:010		
Amended	1701	
200 KAR 40:020		
Amended	1703	
201 KAR 1:190		
Amended	548	
As Amended	1036	
201 KAR 2:030		
Amended	298	
As Amended	738	10-15-14
201 KAR 2:040		
Amended	300	
As Amended	739	10-15-14
201 KAR 5:055	672	
As Amended	1040	
As Amended	1308	11-19-14
201 KAR 8:016		See 40 Ky.R.
As Amended	257	6-18-14
201 KAR 8:550		See 40 Ky.R.
Am Comments	56	9-5-14
201 KAR 8:571		See 40 Ky.R.
As Amended	257	9-5-14
201 KAR 9:270	1257	
AmComments	1670	
201 KAR 9:305		See 40 Ky.R.
As Amended	12	8-1-14
201 KAR 9:307		See 40 Ky.R.
As Amended	13	8-1-14
201 KAR 9:310		
Amended	1132	
201 KAR 9:450		
Amended	1135	
201 KAR 9:460		
Amended	1136	
201 KAR 11:011		See 40 Ky.R.
As Amended	740	10-31-14
201 KAR 11:105		See 40 Ky.R
As Amended	741	10-31-14
201 KAR 11:121		See 40 Ky.R.
As Amended	741	10-31-14
201 KAR 14:085		See 40 Ky.R.
As Amended	13	8-1-14
201 KAR 15:015	336	
As Amended	1041	
201 KAR 18:192		See 40 Ky.R.
As Amended	15	8-1-14
201 KAR 20:056		See 40 Ky.R.
As Amended	17	8-1-14
201 KAR 20:057		See 40 Ky.R.
As Amended	19	7-16-14
201 KAR 20:161		See 40 Ky.R.
As Amended	22	8-1-14
201 KAR 20:220		
Amended	1415	
201 KAR 20:240		
Amended	1417	
201 KAR 20:360		See 40 Ky.R.
As Amended	24	8-1-14
201 KAR 20:370		See 40 Ky.R.
As Amended	26	8-1-14
201 KAR 20:411		See 40 Ky.R.
As Amended	27	8-1-14
201 KAR 20:450		See 40 Ky.R.
As Amended	29	8-1-14
201 KAR 22:040		See 40 Ky.R.
As Amended	31	8-1-14
201 KAR 22:160		See 40 Ky.R.
As Amended	32	8-1-14
201 KAR 23:015		See 40 Ky.R.
As Amended	32	8-1-14
201 KAR 28:010		
Amended	1419	
201 KAR 28:020		
Amended	1421	
201 KAR 28:030		
Amended	1422	
201 KAR 28:060		
Amended	1424	
201 KAR 28:070		
Amended	1426	
201 KAR 28:090		
Amended	1427	
201 KAR 28:110		
Amended	1429	
201 KAR 28:130		
Amended	1430	
201 KAR 28:140		
Amended	1432	
201 KAR 28:170		
Amended	1436	
201 KAR 28:180		
Amended	1438	
201 KAR 28:200		
Amended	1440	
201 KAR 28:220		
Amended	1443	
201 KAR 30:125		
Amended	552	
201 KAR 30:180		
Amended	553	
As Amended	1042	
201 KAR 30:200		
Amended	556	
As Amended	1043	
201 KAR 31:100	210	
As Amended	441	10-3-14
201 KAR 32:035		
Amended	558	
As Amended	1044	11-19-14
201 KAR 33: 010		
Amended	560	11-19-14
201 KAR 34:060		See 40 Ky.R.
As Amended	33	8-1-14
201 KAR 36:060		
Amended	302	
As Amended	1309	
201 KAR 36:070		
Amended	305	
AmComments	1077	
As Amended	1311	
201 KAR 36:080	337	
As Amended	1312	
201 KAR 37:010		
Amended	562	
As Amended	1046	
201 KAR 40:020		
Recodified as 791 KAR 1:020		6-12-14
201 KAR 40:025		

Regulation Number	41 Ky.R. Page No.	Effective Date
Recodified as 791 KAR 1:025		6-12-14
201 KAR 40:027		
Recodified as 791 KAR 1:027		6-12-14
201 KAR 40:030		
Recodified as 791 KAR 1:030		6-12-14
201 KAR 40:035		
Recodified as 791 KAR 1:035		6-12-14
201 KAR 40:040		
Recodified as 791 KAR 1:040		6-12-14
201 KAR 40:050		
Recodified as 791 KAR 1:050		6-12-14
201 KAR 40:060		
Recodified as 791 KAR 1:060		6-12-14
201 KAR 40:070		
Recodified as 791 KAR 1:070		6-12-14
201 KAR 40:080		
Recodified as 791 KAR 1:080		6-12-14
201 KAR 40:090		
Recodified as 791 KAR 1:090		6-12-14
201 KAR 40:100		
Recodified as 791 KAR 1:100		6-12-14
201 KAR 40:150		
Recodified as 791 KAR 1:150		6-12-14
201 KAR 40:155		
Recodified as 791 KAR 1:155		6-12-14
201 KAR 40:160		
Recodified as 791 KAR 1:160		6-12-14
201 KAR 42:035		See 40 Ky.R.
As Amended	441	10-3-14
201 KAR 42:040		See 40 Ky.R.
As Amended	442	10-3-14
201 KAR 42:060		See 40 Ky.R.
As Amended	443	10-3-14
201 KAR 42:080		See 40 Ky.R.
As Amended	444	10-3-14
201 KAR 42:110		See 40 Ky.R.
As Amended	446	10-3-14
201 KAR 44:090		
Amended	307	
Withdrawn		9-19-14
201 KAR 44:110		
Amended	308	
Withdrawn		9-19-14
201 KAR 44:120		
Amended	310	
Withdrawn		9-19-14
201 KAR 43:100		See 40 Ky.R.
As Amended	35	8-1-14
201 KAR 45:110		See 40 Ky.R.
Amended	88	
As Amended	447	10-3-14
Amended	1705	
201 KAR 45:120		
Amended	89	
As Amended	448	10-3-14
Amended	1707	
201 KAR 45:170	211	
As Amended	448	10-3-14
Amended	1709	
201 KAR 45:180	213	
As Amended	449	10-3-14
300 KAR 6:010		
Amended	847	
AmComments	1364	
As Amended	1513	
301 KAR 1:015		
Amended	1138	
As Amended	1518	
301 KAR 1:152		
Amended	854	
301 KAR 1:201		See 40 Ky.R.
As Amended	259	8-7-14
301 KAR 1:220		
Amended	856	
As Amended	1313	
301 KAR 1:410		
Amended	564	
As Amended	1048	
301 KAR 2:049		
Amended	1710	
301 KAR 2:140		
Amended	1140	
As Amended	1520	
301 KAR 2:144		
Amended	1142	
As Amended	1521	
301 KAR 2:178		
Amended	91	9-4-14
301 KAR 2:221		
Amended	1444	
301 KAR 2:222		
Amended	1446	
301 KAR 2:225		
Amended	859	
301 KAR 2:251		
Amended	1451	
301 KAR 2:300		See 40 Ky.R.
As Amended	35	7-3-14
302 KAR 20:066		
Amended	311	
As Amended	743	10-31-14
401 KAR 8:200		
Amended	316	
AmComments	807	
As Amended	1050	
401 KAR 8:300		
Amended	318	
As Amended	1050	
401 KAR 8:700		
Amended	320	
As Amended	1051	
405 KAR 8:030		
Amended	567	
AmComments	1078	
As Amended	1314	
405 KAR 8:040		
Amended	578	
AmComments	1089	
As Amended	1324	
405 KAR 10:025	338	
As Amended	1053	
500 KAR 4:010		
Repealed	214	10-3-14
500 KAR 4:011	214	10-3-14
500 KAR 4:020		
Repealed	214	10-3-14
500 KAR 4:030		
Repealed	214	10-3-14
500 KAR 4:040		
Repealed	214	10-3-14
500 KAR 4:050		
Repealed	214	10-3-14
500 KAR 4:060		
Repealed	214	10-3-14
500 KAR 4:070		
Repealed	214	10-3-14
500 KAR 4:080		
Repealed	214	10-3-14
501 KAR 6:020		See 40 Ky.R.
As Amended	38	8-1-14

Regulation Number	41 Ky.R. Page No.	Effective Date
501 KAR 6:050		
Amended	862	
As Amended	1336	
501 KAR 6:060		
Amended	324	
As Amended	1054	
501 KAR 6:110		See 40 Ky.R.
As Amended	263	9-5-14
503 KAR 1:060		
Amended	326	
As Amended	747	
503 KAR 1:070		
Amended	590	
As Amended	1055	
503 KAR 1:080		
Amended	591	
As Amended	1056	
503 KAR 1:090		
Amended	593	
503 KAR 1:100		
Amended	595	
As Amended	1057	
503 KAR 1:111(r)	1465	
503 KAR 1:120		
Amended	327	
As Amended	747	
503 KAR 3:005		
Amended	97	
As Amended	449	10-3-14
503 KAR 3:010		
Amended	98	
As Amended	450	10-3-14
503 KAR 3:040		
Amended	104	
As Amended	454	10-3-14
503 KAR 3:110		
Amended	108	
As Amended	458	10-3-14
503 KAR 3:120	1466	
505 KAR 1:110		See 40 Ky.R.
AmComments	472	
As Amended	1057	
601 KAR 1:112	1725	
601 KAR 11:030		
Amended	329	10-7-14
702 KAR 1:160		
Amended	597	
AmComments	1101	
As Amended	1337	
702 KAR 3:320	1728	
702 KAR 7:065		See 40 Ky.R.
As Amended	39	8-1-14
702 KAR 7:140		
Amended	600	
As Amended	1339	
703 KAR 5:122*(r)*	674	
703 KAR 5:260	675	
As Amended	1522	
704 KAR 3:370		See 40 Ky.R.
AmComments	61	
As Amended	264	8-11-14
705 KAR 4:250		
Amended	1144	
AmComments	1672	
739 KAR 2:060		
Amended	1146	
739 KAR 2:090		See 40 Ky.R.
As Amended	41	8-1-14
750 KAR 1:030	680	
As Amended	1340	
791 KAR 1:010	215	
As Amended	748	10-31-14
791 KAR 1:020		
Amended	113	
As Amended	750	10-31-14
791 KAR 1:025		
Amended	118	
AmComments	473	
As Amended	754	10-31-14
791 KAR 1:030		
Amended	121	
As Amended	756	10-31-14
791 KAR 1:035		
Amended	123	
As Amended	758	10-31-14
791 KAR 1:050		
Amended	125	
As Amended	758	10-31-14
791 KAR 1:060		
Amended	127	
As Amended	759	10-31-14
791 KAR 1:070		
Amended	129	
As Amended	760	10-31-14
791 KAR 1:090		
Repealed	218	
791 KAR 1:091*(r)*	218	10-31-14
803 KAR 1:010		
Amended	1150	
As Amended	1526	
803 KAR 2:400		See 40 Ky.R.
As Amended	271	9-5-14
803 KAR 2:406		See 40 Ky.R.
As Amended	271	9-5-14
803 KAR 2:412		See 40 Ky.R.
As Amended	271	9-5-14
803 KAR 2:505		See 40 Ky.R.
As Amended	274	9-5-14
804 KAR 4:070		
Repealed	341	10-31-14
804 KAR 4:230		
Amended	331	
As Amended	761	10-31-14
804 KAR 4:350		
Repealed	341	10-31-14
804 KAR 4:351*(r)*	341	10-31-14
804 KAR 4:400		
Amended	333	
As Amended	762	10-31-14
804 KAR 4:410		
Amended	334	
As Amended	762	10-31-14
804 KAR 4:420		
Repealed	341	10-31-14
804 KAR 10:030	682	
804 KAR 10:031	1469	
804 KAR 11:040		See 40 Ky.R.
As Amended	462	
804 KAR 14:010	342	
As Amended	763	10-31-14
806 KAR 6:070		
Amended	864	
As Amended	1341	
806 KAR 30:020		See 40 Ky.R.
As Amended	43	8-1-14
806 KAR 37:010		
Amended	602	
As Amended	1059	
806 KAR 38:100		See 40 Ky.R.
As Amended	274	9-5-14

LOCATOR INDEX - EFFECTIVE DATES

Regulation Number	41 Ky.R. Page No.	Effective Date
806 KAR 47:010		See 40 Ky.R.
As Amended	43	8-1-14
807 KAR 5:001		
Amended	131	
AmComments	476	
As Amended	763	10-31-14
Reprinted	983	
807 KAR 5:011		
Amended	143	
As Amended	775	10-31-14
807 KAR 5:068		
Amended	148	
AmComments	489	10-31-14
807 KAR 5:069		
Amended	150	
As Amended	779	10-31-14
807 KAR 5:075		
Amended	153	
AmComments	492	10-31-14
807 KAR 5:076		
Amended	156	
AmComments	494	10-31-14
807 KAR 5:110		
Amended	160	
As Amended	780	10-31-14
807 KAR 5:120		
Amended	164	
As Amended	782	10-31-14
810 KAR 1:017		
Amended	610	
As Amended	1344	
810 KAR 1:027		
Amended	612	
As Amended	1066	
810 KAR 1:028		
Amended	1155	
As Amended	1529	
811 KAR 1:095		
Amended	1164	
As Amended	1536	
811 KAR 2:070		
Amended	616	
As Amended	1068	
811 KAR 2:090		
Amended	621	
As Amended	1345	
811 KAR 2:100		
Amended	1172	
As Amended	1544	
815 KAR 6:001	683	
As Amended	1551	
815 KAR 6:010		
Amended	623	
AmComments	1371	
As Amended	1551	
815 KAR 6:030		
Amended	626	
AmComments	1374	
As Amended	1554	
815 KAR 6:040		
Amended	628	
815 KAR 6:080	685	
815 KAR 6:090	686	
AmComments	1376	
As Amended	1555	
815 KAR 6:100	689	
815 KAR 7:120		
Amended	1181	
815 KAR 8:010		
Amended	1184	
815 KAR 8:020		
Amended	1187	
815 KAR 8:060		
Amended	1191	
Withdrawn		12-2-14
815 KAR 8:070		
Amended	1193	
815 KAR 8:090		
Amended	1196	
815 KAR 20:015		
Amended	1197	
815 KAR 20:030		
Amended	1199	
815 KAR 20:040		
Amended	166	
As Amended	463	9-24-14
815 KAR 20:050		
Amended	167	9-24-14
Amended	1202	
815 KAR 20:060		
Amended	169	9-24-14
815 KAR 20:070		
Amended	172	9-24-14
815 KAR 20:090		
Amended	175	9-24-14
815 KAR 20:130		
Amended	179	9-24-14
815 KAR 20:191		
Amended	183	
As Amended	463	9-24-14
815 KAR 20:195		
Amended	1204	
900 KAR 6:030		
Amended	190	9-17-14
900 KAR 6:055		See 40 Ky.R.
AmComments	498	
900 KAR 6:060		
Amended	631	
AmComments	1379	
900 KAR 6:065		
Amended	633	
AmComments	1381	
As Amended	1557	
900 KAR 6:070		See 40 Ky.R.
AmComments	500	
As Amended	783	10-15-14
900 KAR 6:075		See 40 Ky.R.
AmComments	502	
900 KAR 6:125		
Amended	192	9-17-14
900 KAR 7:030		See 40 Ky.R.
AmComments	505	10-15-14
900 KAR 10:030		
Amended	1206	
As Amended	1560	
901 KAR 5:025	1260	
As Amended	1566	
902 KAR 2:020		
Amended	1213	
AmComments	1674	
902 KAR 2:055		
Amended	637	
As Amended	1072	11-19-14
902 KAR 4:030		
Amended	1222	
902 KAR 20:008		
Amended	194	
AmComments	809	
902 KAR 20:430	343	
AmComments	1104	

Regulation Number	41 Ky.R. Page No.	Effective Date
As Amended	1346	
902 KAR 20:440	351	
AmComments	1114	
As Amended	1355	
902 KAR 21:010	1261	
As Amended	1567	
902 KAR 30:001		See 40 Ky.R.
As Amended	784	10-15-14
902 KAR 30:110		See 40 Ky.R.
As Amended	786	10-31514
902 KAR 30:120		See 40 Ky.R.
As Amended	788	10-15-14
902 KAR 30:130		See 40 Ky.R.
As Amended	790	10-15-14
902 KAR 30:150		See 40 Ky.R.
AmComments	509	
As Amended	793	10-15-14
902 KAR 30:180		See 40 Ky.R.
AmComments	513	10-15-14
902 KAR 55:045		See 40 Ky.R.
AmComments	290	9-17-14
902 KAR 95:040	219	
As Amended	469	9-17-14
902 KAR 100:010		
Amended	867	
As Amended	1568	
902 KAR 100:012		
Amended	882	
AmComments	1683	
902 KAR 100:019		
Amended	885	
As Amended	1581	
902 KAR 100:042		
Amended	897	
As Amended	1592	
902 KAR 100:058		
Amended	907	
As Amended	1601	
902 KAR 100:070		
Amended	914	
As Amended	1606	
902 KAR 100:072		
Amended	921	
As Amended	1612	
902 KAR 100:100		
Amended	945	
As Amended	1635	
902 KAR 100:142		
Amended	953	
As Amended	1642	
907 KAR 1:515		
Repealed	995	9-16-14
907 KAR 1:520		
Repealed	995	9-16-14
907 KAR 1:525		
Repealed	995	9-16-14
907 KAR 1:530		
Repealed	995	9-16-14
907 KAR 1:550		
Repealed	995	9-16-14
907 KAR 1:555		
Repealed	995	9-16-14
907 KAR 1:835		See 40 Ky.R.
AmComments	516	
As Amended	796	10-31-14
907 KAR 3:005		
Amended	959	
AmComments	1686	
907 KAR 3:110		
Repealed	223	10-3-14
907 KAR 3:111*(r)*	223	10-3-14
907 KAR 15:005		
Amended	639	
AmComments	1385	
As Amended	1647	
907 KAR 15:020	690	
AmComments	1388	
As Amended	1648	
907 KAR 15:025	700	
AmComments	1398	
As Amended	1656	
907 KAR 15:040	1263	
907 KAR 15:045	1268	
907 KAR 15:050	1271	
907 KAR 15:055	1276	
907 KAR 15:060	1279	
907 KAR 15:065	1284	
907 KAR 15:070	965	
AmComments	1692	
907 KAR 15:075	970	
907 KAR 18:001		See 40 Ky.R.
As Amended	44	8-1-14
907 KAR 18:005		See 40 Ky.R.
As Amended	44	8-1-14
908 KAR 3:050		
Amended	642	
AmComments	1121	
908 KAR 3:060		
Amended	644	
As Amended	1360	
910 KAR 1:180		
Amended	200	
AmComments	527	10-15-14
910 KAR 2:040		See 40 Ky.R.
As Amended	48	8-1-14
910 KAR 3:030		
Amended	1455	
911 KAR 1:085		
Amended	1226	
As Amended	1658	
921 KAR 1:410		
Amended	1715	
921 KAR 2:055		See 40 Ky.R.
AmComments	69	
As Amended	280	9-5-14
921 KAR 3:030		
Amended	1719	
921 KAR 3:035		
Amended	205	
As Amended	1074	11-19-14
921 KAR 3:060		
Amended	1722	
921 KAR 3:070		See 40 Ky.R.
AmComments	73	
As Amended	283	9-5-14
921 KAR 3:090		
Amended	647	11-19-14
922 KAR 1:320		See 40 Ky.R.
AmComments	77	
As Amended	286	9-5-14
922 KAR 1:360		
Amended	650	
AmComments	1402	
As Amended	1660	
922 KAR 1:480		See 40 Ky.R.
AmComments	81	
922 KAR 2:160		
Amended	655	
Amended	1229	
922 KAR 5:050		

Regulation Number	41 Ky.R. Page No.	Effective Date	Regulation Number	41 Ky.R. Page No.	Effective Date
Amended	1462				
922 KAR 5:070					
Amended	664				
AmComments	1408				
As Amended	1665				
922 KAR 5:120	703				
AmComments	1412				
As Amended	1668				

SYMBOL KEY:
* Statement of Consideration not filed by deadline
** Withdrawn, not in effect within 1 year of publication
*** Withdrawn before being printed in Register
(r) Repealer regulation: KRS 13A.310-on the effective date of an administrative regulation that repeals another, the regulations compiler shall delete the repealed administrative regulation and the repealing administrative regulation.

KRS INDEX

KRS SECTION	REGULATION
13A.100	105 KAR 1:291
	500 KAR 4:011
13A.190	902 KAR 20:043
	902 KAR 20:440
13B	900 KAR 7:030
	908 KAR 3:060
	922 KAR 3:030
	922 KAR 1:360
	922 KAR 5:070
	922 KAR 5:120
13B.010	921 KAR 1:410
13B.010-170	910 KAR 1:180
15.055	921 KAR 1:410
15.330	503 KAR 1:060
	503 KAR 1:070
	503 KAR 1:080
	503 KAR 1:090
	503 KAR 1:100
	503 KAR 1:111
	503 KAR 1:120
15.380	503 KAR 3:110
15.386	503 KAR 1:111
	503 KAR 3:120
15.3975	503 KAR 3:110
15.404	503 KAR 1:111
	503 KAR 1:120
15.440	503 KAR 1:111
	503 KAR 1:120
15.450	503 KAR 1:060
15.530	500 KAR 4:011
15.530-15.590	503 KAR 3:040
15.540	500 KAR 4:011
15.550	500 KAR 4:011
15.560	500 KAR 4:011
15.570	500 KAR 4:011
15A.070	503 KAR 3:005
	503 KAR 3:010
	503 KAR 3:120
17.500	601 KAR 1:112
	902 KAR 20:430
18A.030	101 KAR 2:210
18A.225	101 KAR 2:210
18A.2254	101 KAR 2:210
40.310	201 KAR 37:010
40.353	201 KAR 37:010
40.460	201 KAR 37:010
42.320	922 KAR 3:030
42.0171	200 KAR 40:010
	200 KAR 40:020
44.045	200 KAR 40:010
	200 KAR 40:020
45A.075	922 KAR 3:030
45A.080	922 KAR 3:030
58.200	815 KAR 20:191
61.645	105 KAR 1:291
	105 KAR 1:410
61.701	105 KAR 1:291
	105 KAR 1:410
61.702	105 KAR 1:291
	105 KAR 1:410
61.878	601 KAR 1:112
61.932	200 KAR 1:015
61.933	200 KAR 1:015
65.810	807 KAR 5:068
	807 KAR 5:069
	807 KAR 5:075
61.870-884	807 KAR 5.001
	807 KAR 5:110
61.874	201 KAR 20:240
61.931-934	807 KAR 5:001
65.810	807 KAR 5.001

KRS SECTION	REGULATION
67A.620	921 KAR 1:410
	807 KAR 5:068
	807 KAR 5:075
72.020	501 KAR 6:050
72.025	501 KAR 6:050
74	807 KAR 5.001
	807 KAR 5:068
	807 KAR 5:069
	807 KAR 5:075
95A.040	739 KAR 2:060
95.620	921 KAR 1:410
95.878	921 KAR 1:410
116.045	31 KAR 4:140
116.048	921 KAR 3:030
117.079	31 KAR 4:140
	31 KAR 5:010
117.085	31 KAR 4:130
	31 KAR 4:140
117.086	31 KAR 4:130
117A.030	31 KAR 4:130
117A.040	31 KAR 3:030
117A.050	31 KAR 4:140
	31 KAR 5:010
117A.060	31 KAR 4:140
	31 KAR 5:010
117A.080	31 KAR 4:130
117A.100	31 KAR 5:010
117A.120	31 KAR 4:130
117A.130	31 KAR 4:130
	31 KAR 5:010
117A.160	31 KAR 5:010
131.570	921 KAR 1:410
132.010	815 KAR 7:120
136.320	103 KAR 15:180
136.330	103 KAR 15:180
136.340	103 KAR 15:180
136.350	103 KAR 15:180
136.370	103 KAR 15:180
136.390	103 KAR 15:180
141.020	103 KAR 15:180
141.21	401 KAR 8:200
141.040	103 KAR 15:180
141.42	401 KAR 8:300
141.43	401 KAR 8:300
141.52	401 KAR 8:200
141.0401	103 KAR 15:180
141.050	103 KAR 15:180
141.63	401 KAR 8:200
141.80-141.91	401 KAR 8:300
141.154	401 KAR 8:300
141.432	103 KAR 15:180
141.433	103 KAR 15:180
141.434	103 KAR 15:180
141.444	201 KAR 37:010
150.010	301 KAR 1:152
	301 KAR 1:410
	301 KAR 2:049
	301 KAR 2:140
	301 KAR 2:144
	301 KAR 2:178
	301 KAR 2:221
	301 KAR 2:222
150.025	301 KAR 2:221
150.090	301 KAR 1:015
150.170	301 KAR 1:152
	301 KAR 1:410
	301 KAR 2:140
	301 KAR 2:144
	301 KAR 2:178
	301 KAR 2:251
150.175	301 KAR 1:152

KRS SECTION	REGULATION
	301 KAR 1:410
	301 KAR 2:140
	301 KAR 2:144
150.180	301 KAR 2:251
150.092	301 KAR 2:049
150.170	301 KAR 2:049
150.235	301 KAR 1:410
150.305	301 KAR 2:140
	301 KAR 2:144
	301 KAR 2:221
	301 KAR 2:222
150.330	301 KAR 2:221
	301 KAR 2:222
	301 KAR 2:225
150.340	301 KAR 1:220
	301 KAR 2:178
	301 KAR 2:221
	301 KAR 2:222
	301 KAR 2:225
150.360	301 KAR 2:049
	301 KAR 2:140
	301 KAR 2:144
150.370	301 KAR 2:178
	301 KAR 2:251
150.390	301 KAR 2:144
150.399	301 KAR 2:049
	301 KAR 2:251
150.415	301 KAR 2:251
150.416	301 KAR 2:251
150.440	301 KAR 1:220
150.445	301 KAR 1:152
	301 KAR 1:220
	301 KAR 1:410
150.450	301 KAR 1:152
	301 KAR 1:220
150.470	301 KAR 1:220
150.603	301 KAR 2:225
150.620	301 KAR 1:410
150.625	301 KAR 1:015
150.720-150.740	302 KAR 20:066
150.990	301 KAR 1:015
	301 KAR 1:152
	301 KAR 1:410
	301 KAR 2:049
	301 KAR 2:140
	301 KAR 2:144
	301 KAR 2:178
	301 KAR 2:221
	301 KAR 2:222
	301 KAR 2:251
150.995	301 KAR 2:251
	301 KAR 2:049
154A.130	11 KAR 15:090
156.111	16 KAR 9:080
156.160	702 KAR 1:160
156.501	702 KAR 1:160
156.502	702 KAR 1:160
157.320	702 KAR 7:140
157.350	702 KAR 7:140
157.390	16 KAR 2:120
157.618	750 KAR 1:030
158.035	702 KAR 1:160
	902 KAR 2:055
158.060	702 KAR 7:140
158.070	702 KAR 7:140
158.160	702 KAR 1:160
158.6451	703 KAR 5:122
158.6453	703 KAR 5:122
	703 KAR 5:260
158.6455	703 KAR 5:122
	703 KAR 5:260
158.782	703 KAR 5:122

KRS SECTION	REGULATION
	703 KAR 5:260
158.805	703 KAR 5:122
158.808	705 KAR 4:250
158.810	705 KAR 4:250
160.345	16 KAR 9:080
160.346	703 KAR 5:122
160.431	702 KAR 3:320
	703 KAR 5:260
161.020	16 KAR 2:120
	16 KAR 6:010
	702 KAR 3:320
161.027	16 KAR 9:080
161.028	16 KAR 2:120
	16 KAR 5:060
	16 KAR 6:010
	16 KAR 9:080
161.030	16 KAR 2:120
	16 KAR 5:060
	16 KAR 6:010
	16 KAR 9:080
161.048	16 KAR 9:080
161.100	16 KAR 2:120
161.145	702 KAR 1:160
161.1211	16 KAR 2:120
161.1221	16 KAR 2:120
161.700	921 KAR 1:410
164.518	11 KAR 4:080
	11 KAR 16:001
	11 KAR 16:010
164.740	11 KAR 8:030
	11 KAR 16:001
	11 KAR 19:010
164.740-164.785	11 KAR 5:001
164.744	11 KAR 3:100
	11 KAR 4:080
	11 KAR 5:034
	11 KAR 8:030
164.748	11 KAR 3:100
	11 KAR 4:080
	11 KAR 5:170
164.753	11 KAR 3:100
	11 KAR 4:080
	11 KAR 5:033
	11 KAR 5:034
	11 KAR 5:170
	11 KAR 8:030
164.769	11 KAR 4:080
	11 KAR 8:030
164.772	804 KAR 4:440
164.780	11 KAR 4:080
	11 KAR 5:033
	11 KAR 5:170
164.785	11 KAR 4:080
	11 KAR 5:033
	11 KAR 5:170
164.945	16 KAR 5:060
164.946	16 KAR 5:060
164.947	16 KAR 5:060
164.7535	11 KAR 4:080
	11 KAR 5:034
	11 KAR 5:170
164.7871	11 KAR 15:090
164.7871-164.7885	11 KAR 15:060
164.7874	11 KAR 15:090
164.7877	11 KAR 15:090
164.7879	11 KAR 15:090
164.7881	11 KAR 15:090
164.7885	11 KAR 15:090
164.7889	11 KAR 15:090
164.7890	11 KAR 4:080
	11 KAR 19:010
164.7894	11 KAR 20:001

KRS SECTION	REGULATION
	11 KAR 20:010
	11 KAR 20:020
	11 KAR 20:030
	11 KAR 20:040
	11 KAR 20:050
	11 KAR 20:060
	11 KAR 20:070
165.110	401 KAR 8:700
165A.310	791 KAR 1:020
	791 KAR 1:070
165A.330	791 KAR 1:010
	791 KAR 1:020
	791 KAR 1:050
	791 KAR 1:060
	791 KAR 1:070
	791 KAR 1:090
165A.350	791 KAR 1:010
	791 KAR 1:025
	791 KAR 1:030
	791 KAR 1:070
	791 KAR 1:090
165A.360	791 KAR 1:010
	791 KAR 1:025
	791 KAR 1:030
	791 KAR 1:090
165A.370	791 KAR 1:020
	791 KAR 1:030
	791 KAR 1:060
	791 KAR 1:070
	791 KAR 1:090
165A.380	791 KAR 1:025
	791 KAR 1:070
165A.390	791 KAR 1:030
165A.450	791 KAR 1:035
	791 KAR 1:030
	791 KAR 1:050
165A.460	791 KAR 1:070
165A.465	791 KAR 1:050
	791 KAR 1:070
165A.470	791 KAR 1:050
	791 KAR 1:070
165A.475	791 KAR 1:050
	791 KAR 1:070
165A.480	791 KAR 1:050
	791 KAR 1:070
165A.485	791 KAR 1:060
	791 KAR 1:070
165A.490	791 KAR 1:090
165A.495	791 KAR 1:090
165A.510	791 KAR 1:060
	791 KAR 1:090
165A.990	791 KAR 1:030
	791 KAR 1:090
171.396	300 KAR 6:010
171.3961	300 KAR 6:010
171.397	300 KAR 6:010
186.162	201 KAR 37:010
186.168	201 KAR 37:010
186.281	601 KAR 1:112
186.570	921 KAR 1:410
189.290	601 KAR 1:112
189A.050	922 KAR 3:030
194A.010	601 KAR 1:112
	922 KAR 5:070
194A.025	907 KAR 15:005
194A.030	911 KAR 1:085
194A.050	900 KAR 10:030
194A.060	922 KAR 2:160
194A.700	910 KAR 1:180
196	501 KAR 6:050
	501 KAR 6:060
197	501 KAR 6:050

KRS SECTION	REGULATION
	501 KAR 6:060
198.260	902 KAR 20:430
198B.010	815 KAR 7:120
198B.040	815 KAR 7:120
198B.050	815 KAR 7:120
	815 KAR 20:195
198B.060	815 KAR 7:120
198B.080	815 KAR 7:120
198B.110	815 KAR 7:120
198B.260	815 KAR 7:120
	902 KAR 20:430
198B.650	815 KAR 8:010
	815 KAR 8:020
198B.654	815 KAR 8:010
	815 KAR 8:020
	815 KAR 8:070
198B.656	815 KAR 8:010
	815 KAR 8:020
	815 KAR 8:090
198B.658	815 KAR 8:010
	815 KAR 8:020
	815 KAR 8:060
	815 KAR 8:090
198B.659	815 KAR 8:010
	815 KAR 8:020
198B.660	815 KAR 8:010
	815 KAR 8:020
	815 KAR 8:060
	815 KAR 8:090
198B.664	815 KAR 8:010
	815 KAR 8:020
	815 KAR 8:060
	815 KAR 8:090
198B.668	815 KAR 8:010
198B.672	815 KAR 8:010
	815 KAR 8:020
	815 KAR 8:060
198B.676	815 KAR 8:010
	815 KAR 8:020
198B.684	815 KAR 8:060
198B.700	815 KAR 6:010
198B.704	815 KAR 6:100
198B.706	815 KAR 6:001
	815 KAR 6:010
	815 KAR 6:030
	815 KAR 6:090
198B.712	815 KAR 6:010
	815 KAR 6:040
	815 KAR 6:080
	815 KAR 6:090
198B.714	815 KAR 6:010
198B.716	815 KAR 6:010
198B.722	815 KAR 6:010
	815 KAR 6:040
	815 KAR 6:080
	815 KAR 6:090
198B.724	815 KAR 6:010
	815 KAR 6:040
	815 KAR 6:080
198B.728	815 KAR 6:030
	815 KAR 6:090
198B.730	815 KAR 6:090
198B.738	815 KAR 6:010
198B.990	815 KAR 7:120
198B.6671	815 KAR 8:090
198B.6673	815 KAR 8:070
198B.6678	815 KAR 8:070
199.011	922 KAR 1:360
199.640-199.680	922 KAR 1:360
199.801	922 KAR 1:360
199.892	922 KAR 2:160
199.894	922 KAR 2:160

KRS SECTION	REGULATION
199.896	922 KAR 2:160
199.898	922 KAR 2:160
199.8982	922 KAR 2:160
199.899	922 KAR 2:160
199.8994	922 KAR 2:160
200.503	902 KAR 20:430
	902 KAR 20:440
200.460-200.499	911 KAR 1:085
202A.051	922 KAR 5:070
202B.100	922 KAR 5:070
205.010	910 KAR 1:180
205.201	910 KAR 1:180
205.203	910 KAR 1:180
205.455	922 KAR 5:050
205.455-465	910 KAR 1:180
205.520	907 KAR 15:020
	907 KAR 15:025
	907 KAR 3:005
	907 KAR 15:040
	907 KAR 15:045
	907 KAR 15:050
	907 KAR 15:055
	907 KAR 15:060
	907 KAR 15:065
	907 KAR 15:070
	907 KAR 15:075
205.560	907 KAR 3:005
205.594	921 KAR 1:410
205.595	921 KAR 1:410
205.710-205.802	921 KAR 1:410
205.7685	921 KAR 1:410
205.900	922 KAR 3:030
209	922 KAR 5:070
	922 KAR 5:120
209.020	922 KAR 5:050
209.030	910 KAR 1:180
	922 KAR 5:050
209.160	922 KAR 5:050
209A.010-080	922 KAR 5:050
210.005	902 KAR 20:430
	902 KAR 20:440
210.366	201 KAR 28:200
210.710	908 KAR 3:050
	908 KAR 3:060
210.720	908 KAR 3:050
	908 KAR 3:060
210.730	908 KAR 3:050
	908 KAR 3:060
211.090	902 KAR 2:055
211.180	902 KAR 2:020
	902 KAR 2:055
211.400	902 KAR 21:010
211.402	902 KAR 21:010
211.470-211.478	922 KAR 3:030
211.647	911 KAR 1:085
211.840	902 KAR 100:010
211.840-211.852	902 KAR 100:010
	902 KAR 100:012
	902 KAR 100:019
	902 KAR 100:042
	902 KAR 100:058
	902 KAR 100:070
	902 KAR 100:072
	902 KAR 100:100
	902 KAR 100:142
211.990	902 KAR 100:010
	902 KAR 100:012
	902 KAR 100:019
	902 KAR 100:042
	902 KAR 100:058
	902 KAR 100:070
	902 KAR 100:072

KRS SECTION	REGULATION
	902 KAR 100:100
	902 KAR 100:142
211.9101-9135	902 KAR 95:040
213.046	911 KAR 1:085
213.076	901 KAR 5:025
214.010	902 KAR 2:020
214.032-214.036	902 KAR 2:055
214.034	702 KAR 1:160
214.036	702 KAR 1:160
	922 KAR 2:160
214.155	902 KAR 4:030
214.610	201 KAR 9:310
214.615	201 KAR 9:310
214.620	201 KAR 9:310
214.645	902 KAR 2:020
216.2920-216.2929	900 KAR 7:030
216.2925	902 KAR 20:008
216.2970	911 KAR 1:085
216.530	902 KAR 20:008
216B.010	900 KAR 6:070
	900 KAR 6:075
	902 KAR 20:008
216B.010-216B.130	900 KAR 6:055
216B.015	900 KAR 6:030
	900 KAR 6:060
	900 KAR 6:065
	900 KAR 6:075
	900 KAR 6.125
	902 KAR 20:008
216B.040	900 KAR 6:060
	900 KAR 6:065
	902 KAR 20:008
216B.042	902 KAR 20:008
216B.045-055	902 KAR 20:008
216B.062	900 KAR 6:065
216B.075	902 KAR 20:008
216B.085	900 KAR 6:065
216B.090	900 KAR 6:070
	900 KAR 6:075
216B.095	900 KAR 6:060
	900 KAR 6:065
216B.105-131	902 KAR 20:008
216B.185	902 KAR 20:008
216B.330-216B.339	900 KAR 6:055
216B.445	900 KAR 6:055
	900 KAR 6:075
216B.990	900 KAR 6:055
	900 KAR 6:070
	900 KAR 6:075
	902 KAR 20:008
218A.205	201 KAR 9:310
224.10-110	401 KAR 8:200
	401 KAR 8:700
227.300	815 KAR 7:120
227.550	815 KAR 7:120
230.210-360	810 KAR 1:017
	811 KAR 2:090
230.215	810 KAR 1:027
	810 KAR 1:028
	811 KAR 1:095
	811 KAR 2:070
	811 KAR 2:100
230.240	810 KAR 1:027
	811 KAR 2:070
230.260	810 KAR 1:028
	811 KAR 1:095
	811 KAR 2:100
230.265	810 KAR 1:028
	811 KAR 1:095
	811 KAR 2:100
230.290	810 KAR 1:027
	810 KAR 1:028

KRS SECTION	REGULATION
	811 KAR 1:095
	811 KAR 2:070
	811 KAR 2:100
230.300	810 KAR 1:028
	811 KAR 1:095
	811 KAR 2:100
230.310	810 KAR 1:027
	811 KAR 2:070
230.320	810 KAR 1:027
	810 KAR 1:028
	811 KAR 1:095
	811 KAR 2:100
230.361	810 KAR 1:028
	811 KAR 2:070
	811 KAR 2:100
235.010	301 KAR 1:015
235.990	301 KAR 1:015
237.110	921 KAR 1:410
241.060	804 KAR 4:351
	804 KAR 4:440
	804 KAR 4.410
	804 KAR 14:010
243.030	804 KAR 4:230
243.042	804 KAR 4:230
243.050	804 KAR 4:230
243.075	804 KAR 10:030
	804 KAR 10:031
243.082	804 KAR 4:230
243.090	804 KAR 4:440
243.380	804 KAR 4:440
	804 KAR 4.410
243.390	804 KAR 4:440
	804 KAR 4.410
246.295	302 KAR 20:066
257.550	302 KAR 20:066
278.010	807 KAR 5.001
	807 KAR 5:011
	807 KAR 5:068
	807 KAR 5:069
	807 KAR 5:075
	807 KAR 5:076
278.012	807 KAR 5:068
	807 KAR 5:075
278.015	807 KAR 5:068
	807 KAR 5:075
278.020	807 KAR 5.001
	807 KAR 5:069
	807 KAR 5:120
278.023	807 KAR 5:069
278.030	807 KAR 5:011
	807 KAR 5:075
	807 KAR 5:076
278.040	807 KAR 5:075
278.100	807 KAR 5.001
278.160	807 KAR 5:011
	807 KAR 5:076
278.170	807 KAR 5:011
278.180	807 KAR 5.001
	807 KAR 5:011
	807 KAR 5:076
278.190	807 KAR 5:011
	807 KAR 5:069
	807 KAR 5:076
278.300	807 KAR 5.001
	807 KAR 5:069
278.310	807 KAR 5:076
278.380	807 KAR 5:076
278.410	807 KAR 5:001
278.702	807 KAR 5:110
278.704	807 KAR 5:110
278.706	807 KAR 5:110
278.708	807 KAR 5:110

KRS SECTION	REGULATION
278.710	807 KAR 5:110
278.712	807 KAR 5:110
278.714	807 KAR 5:110
278.716	807 KAR 5:110
281.010-281.320	601 KAR 11:030
281.600	601 KAR 1:112
281.620	601 KAR 1:112
281.650	601 KAR 1:112
281.655	601 KAR 1:112
281.730	601 KAR 1:112
281.912	601 KAR 1:112
281.990	601 KAR 1:112
281.6301	601 KAR 1:112
304.06	806 KAR 6:070
	806 KAR 37:010
304.1-050	806 KAR 6:070
304.2-290	806 KAR 6:070
304.15-410	806 KAR 6:070
304.24-390	806 KAR 37:010
304.24-410	806 KAR 37:010
304.3-240	806 KAR 6:070
304.3-270	103 KAR 15:180
304.33	806 KAR 37:010
304.37-020	806 KAR 37:010
304.37-030	806 KAR 37:010
304.37-110	806 KAR 37:010
304.37-120	806 KAR 37:010
304.37-130	806 KAR 37:010
304.39-020	601 KAR 1:112
304.39-320	601 KAR 1:112
309.080	902 KAR 20:430
309.130	902 KAR 20:430
	902 KAR 20:440
309.331	201 KAR 45:110
	201 KAR 45:120
	201 KAR 45:170
	201 KAR 45:180
309.334	201 KAR 45:170
309.335	201 KAR 45:120
	201 KAR 45:170
309.336	201 KAR 45:170
310.050	201 KAR 33:010
311.530-311.620	201 KAR 9:270
311.565	201 KAR 9:310
311.571	902 KAR 20:440
311.601	201 KAR 9:310
311.671	201 KAR 9:450
	201 KAR 9:460
311.673	201 KAR 9:450
	201 KAR 9:460
311.680	201 KAR 9:460
311.840-311.862	902 KAR 20:440
311.860	902 KAR 20:430
311.990	201 KAR 9:270
314.011	201 KAR 20:220
	922 KAR 2:160
314.027	201 KAR 20:240
314.041	201 KAR 20:240
314.042	201 KAR 20:240
	902 KAR 20:430
	902 KAR 20:440
314.051	201 KAR 20:240
314.071	201 KAR 20:240
314.073	201 KAR 20:220
	201 KAR 20:240
314.075	201 KAR 20:240
314.101	201 KAR 20:240
314.131	201 KAR 20:220
314.142	201 KAR 20:240
314.161	201 KAR 20:240
314.171	201 KAR 20:240
315.010	201 KAR 2:040

KRS SECTION	REGULATION
315.020	201 KAR 2:040
315.050	201 KAR 2:040
315.191	201 KAR 2:040
315.191	201 KAR 2:030
315.210	201 KAR 2:030
318.010	815 KAR 20:030
	815 KAR 20:070
	815 KAR 20:090
	815 KAR 20:130
	815 KAR 20:195
318.015	815 KAR 20:070
	815 KAR 20:090
	815 KAR 20:130
318.020	815 KAR 20:030
318.030	815 KAR 20:050
	815 KAR 20:060
	815 KAR 20:090
	815 KAR 20:130
318.040	815 KAR 20:030
318.050	815 KAR 20:015
	815 KAR 20:030
318.054	815 KAR 20:015
	815 KAR 20:030
318.134	815 KAR 20:015
	815 KAR 20:050
	815 KAR 20:195
318.150	815 KAR 20:060
	815 KAR 20:070
	815 KAR 20:090
	815 KAR 20:130
318.160	815 KAR 20:050
	815 KAR 20:191
318.170	807 KAR 20:040
318.200	815 KAR 20:070
	815 KAR 20:090
	815 KAR 20:130
319.050	902 KAR 20:430
	902 KAR 20:440
319.056	902 KAR 20:430
	902 KAR 20:440
319.064	902 KAR 20:430
319A.010	201 KAR 28:130
	201 KAR 28:170
319A.010-319A.210	201 KAR 28:010
319A.030	201 KAR 28:220
319A.070	201 KAR 28:200
319A.080	201 KAR 28:020
	201 KAR 28:170
319A.090	201 KAR 28:030
319A.100	201 KAR 28:060
	201 KAR 28:130
	201 KAR 28:180
319A.110	201 KAR 28:020
	201 KAR 28:060
319A.120	201 KAR 28:020
	201 KAR 28:070
319A.130	201 KAR 28:020
	201 KAR 28:060
319A.140	201 KAR 28:020
319A.160	201 KAR 28:090
	201 KAR 28:110
	201 KAR 28:140
	201 KAR 28:200
319A.170	201 KAR 28:110
	201 KAR 28:170
319A.190	201 KAR 28:140
319B.010	201 KAR 44:090
319B.030	201 KAR 44:090
	201 KAR 44:120
319B.130	201 KAR 44.110
319C.010	902 KAR 20:430
	902 KAR 20:440

KRS SECTION	REGULATION
320.390	201 KAR 5:055
322.340	807 KAR 5.001
322A.030	201 KAR 31:100
324A.035	201 KAR 30:080
	201 KAR 30:125
	201 KAR 30:200
324A.045	201 KAR 30:125
324A.065	201 KAR 30:200
324A.075	201 KAR 30:200
325.230	201 KAR 15:015
325.240	201 KAR 15:015
325.261	201 KAR 1:190
325.270	201 KAR 1:190
332.095	791 KAR 1:070
333.130	902 KAR 2:020
334A.030	16 KAR 2:120
334A.033	16 KAR 2:120
334A.035	16 KAR 2:120
334A.050	16 KAR 2:120
334A.060	16 KAR 2:120
335.080	902 KAR 20:430
	902 KAR 20:440
	902 KAR 95.080
335.100	902 KAR 20:430
	902 KAR 20:440
	902 KAR 95.080
335.300	902 KAR 20:430
	902 KAR 20:440
	902 KAR 95.080
335.320	201 KAR 32:035
335.332	201 KAR 32:035
335.500	201 KAR 36:060
	902 KAR 20:430
	902 KAR 20:440
	902 KAR 95.080
335.505	201 KAR 36:060
335.515	201 KAR 36:080
335.525	201 KAR 36:060
	201 KAR 36:070
335.527	201 KAR 36:070
337.275	922 KAR 2:160
343	803 KAR 1:010
350.020	405 KAR 10:025
350.060	405 KAR 8:030
	405 KAR 8:040
	405 KAR 10:025
350.062	405 KAR 10:025
350.064	405 KAR 10:025
350.093	405 KAR 10:025
350.095	405 KAR 10:025
350.100	405 KAR 10:025
350.110	405 KAR 10:025
350.151	405 KAR 8:040
	405 KAR 10:025
350.465	405 KAR 8:030
	405 KAR 10:025
350.500-521	405 KAR 10:025
365.015	807 KAR 5.001
367.110-367.360	791 KAR 1:010
369.102	807 KAR 5.001
387.540	922 KAR 5:070
403.211-403.215	921 KAR 1:410
405.060	921 KAR 1:410
405.405-405.991	921 KAR 1:410
407.5101-407.5902	921 KAR 1:410
424.300	807 KAR 5.001
427.120	921 KAR 1:410
427.125	921 KAR 1:410
434.444	201 KAR 37:010
439	501 KAR 6:050
	501 KAR 6:060
439.3401	902 KAR 20:430

KRS SECTION	REGULATION
532.060	601 KAR 1:112
600.020	922 KAR 1:360
	922 KAR 2:160
605.090	922 KAR 1:360
605.120	922 KAR 2:160
610.110	922 KAR 1:360
620.020	201 KAR 9:310
	922 KAR 2:160
7 C.F.R.	405 KAR 8:030
	405 KAR 8:040
	921 KAR 3:030
	921 KAR 3:035
	921 KAR 3:060
	921 KAR 3:090
	922 KAR 2:160
10 C.F.R.	902 KAR 100:010
	902 KAR 100:019
	902 KAR 100:042
	902 KAR 100:058
	902 KAR 100:070
	902 KAR 100:072
	902 KAR 100:100
	902 KAR 100:142
20 C.F.R.	922 KAR 2:160
21 C.F.R.	401 KAR 8:700
	902 KAR 100:100
27 C.F.R.	804 KAR 14:010
29 C.F.R.	702 KAR 1:160
30 C.F.R.	405 KAR 8:030
	405 KAR 8:040
31 C.F.R.	921 KAR 1:410
34 C.F.R.	11 KAR 3:100
	11 KAR 4:080
36 C.F.R.	300 KAR 6:010
39 C.F.R.	902 KAR 100:070
40 C.F.R.	405 KAR 8:030
	405 KAR 8:040
	401 KAR 8:200
	401 KAR 8:300
	902 KAR 100:019
42 C.F.R.	902 KAR 20:430
	902 KAR 20:440
	902 KAR 95.080
	907 KAR 3:005
	921 KAR 1:410
45 C.F.R.	807 KAR 5:001
	900 KAR 10:030
	902 KAR 2:055
	902 KAR 20:430
	902 KAR 20:440
	902 KAR 95.080
	902 KAR 100:072
	907 KAR 3:005
	922 KAR 2:160
	922 KAR 5:050
45 C.F.R.	921 KAR 1:410
47 C.F.R.	807 KAR 5.001
49 C.F.R.	791 KAR 1:060
	902 KAR 100:019
	902 KAR 100:070
7 U.S.C.	921 KAR 3:030
	921 KAR 3:035
	921 KAR 3:060
12 U.S.C.	201 KAR 30:125
	201 KAR 30:200
15 U.S.C.	902 KAR 100:042
	921 KAR 1:410
16 U.S.C.	300 KAR 6:010
	405 KAR 8:030
	405 KAR 8:040
20 U.S.C.	11 KAR 3:100
	11 KAR 4:080

KRS SECTION	REGULATION
	16 KAR 5:060
	807 KAR 5:001
25 U.S.C.	922 KAR 2:160
26 U.S.C.	103 KAR 15:180
	105 KAR 1:410
	804 KAR 14:010
29 U.S.C.	922 KAR 2:160
30 U.S.C.	405 KAR 8:030
	405 KAR 8:040
38 U.S.C.	922 KAR 2:160
42 U.S.C.	31 KAR 4:130
	31 KAR 4:140
	31 KAR 5:010
	401 KAR 8:300
	900 KAR 10:030
	902 KAR 20:430
	902 KAR 20:440
	902 KAR 100:010
	907 KAR 1:516E
	907 KAR 3:005
	907 KAR 3:111
	907 KAR 15:020
	907 KAR 15:025
	907 KAR 15:040
	907 KAR 15:045
	907 KAR 15:050
	907 KAR 15:055
	907 KAR 15:060
	907 KAR 15:065
	907 KAR 15:070
	907 KAR 15:075
	910 KAR 1:180
	921 KAR 3:030
	921 KAR 3:035
	922 KAR 1:360
	922 KAR 2:160
	922 KAR 5:070
2014 Ky. Acts ch. 117	922 KAR 1:360
	922 KAR 2:160
Pres. EO 13166	921 KAR 3:030

TECHNICAL AMENDMENT INDEX

The Technical Amendment Index is a list of administrative regulations which have had technical, nonsubstantive amendments entered since being published in the *2014 Kentucky Administrative Regulations Service*. These technical changes have been made by the Regulations Compiler pursuant to KRS 13A.040(9) and (10), 13A.312(2), or 13A.320(1)(d). Since these changes were not substantive in nature, administrative regulations appearing in this index will NOT be published to show the technical corrections in the *Administrative Register of Kentucky*. NOTE: Finalized copies of the technically amended administrative regulations are available for viewing on the Legislative Research Commission Web site at http://www.lrc.ky.gov/home.htm.

‡ - Pursuant to KRS 13A.320(e), this indicates a technical change was made to this administrative regulation during the promulgation process.

13 KAR 2:045		11-20-14
201 KAR 30:040		10-3-14
201 KAR 38:010		7-17-14
201 KAR 38:020		7-17-14
201 KAR 38:030		7-17-14
201 KAR 38:040		7-17-14
201 KAR 38:060		7-17-14
201 KAR 38:070		7-17-14
405 KAR 8:030	‡	12-11-14
405 KAR 8:040	‡	12-11-14
803 KAR 2:060		7-17-14
804 KAR 3:100		7-15-14
804 KAR 4:110		7-15-14
804 KAR 4:150		7-15-14
804 KAR 4:340		7-15-14
804 KAR 4:370		7-15-14
804 KAR 4:385		7-15-14
804 KAR 8:060		7-15-14
804 KAR 9:020		7-15-14
804 KAR 9:030		7-15-14
804 KAR 10:010		7-15-14
804 KAR 10:020		7-15-14
804 KAR 11:030		7-15-14
804 KAR 13:010		7-15-14
805 KAR 4:020		6-26-14
805 KAR 4:050		6-26-14
805 KAR 4:060		6-26-14
907 KAR 1:585		9-26-14
907 KAR 12:010		9-10-14
		11-4-14
910 KAR 1:180	‡	9-4-14
921 KAR 3:042	‡	7-1-14

SUBJECT INDEX

ACCOUNTANCY, STATE BOARD OF
Examination sections, applications, and procedures; 201 KAR 1:190

ALCOHOLIC BEVERAGE CONTROL, DEPARTMENT OF
Licensing
Application, basic and renewal form; 804 KAR 4:400
Application, special and registration form; 804 KAR 4:410
Malt beverage and wine for personal use; 804 KAR 14:010
Repeal of 804 KAR 4:070, 4:350, and 4:420; 804 KAR 4:351
Supplemental licenses, extended hours; 804 KAR 4:230
Local Administrators
Local government regulatory license fees; 804 KAR 10:031

BARBERING, BOARD OF
Sanitation requirements; 201 KAR 14:085

COMMUNITY BASED SERVICES, DEPARTMENT FOR
Adult Services
Caregiver misconduct registry and appeals; 922 KAR 5:120
Domestic violence shelters; funding requirements; 922 KAR 5:050
Protective services; 922 KAR 5:070
Child Welfare
Appeal of child abuse and neglect investigative finding; 922 KAR 1:480
Private child care placement, levels of care, and payment; 922 KAR 1:360
Service appeals; 922 KAR 1:320
Day Care
Child Care Assistance Program; 922 KAR 2:160
Family Support
Child support collection and enforcement; 921 KAR 1:410
K-TAP, Kentucky Works, Welfare to Work, State Supplementation
Hearings and appeals; 921 KAR 2:055
Supplemental Nutrition Assistance Program
Administrative disqualification hearings and penalties; 921 KAR 3:060
Application process; 921 KAR 3:030
Certification process; 921 KAR 3:035
Hearings, fair; 921 KAR 3:070
Simplified Assistance for the Elderly Program or "SAFE"; 921 KAR 3:090

COMMUNITY AND TECHNICAL COLLEGE SYSTEM
Kentucky Fire Commission
Candidate Physical Ability Test; 739 KAR 2:090
Fire service instructors; certification and qualifications; 739 KAR 2:060

CORRECTIONS, DEPARTMENT OF
Office of the Secretary
Luther Luckett Correctional Complex; 501 KAR 6:050
Northpoint Training Center; 501 KAR 6:060
Policies and procedures; 501 KAR 6:020

COUNSELORS, BOARD OF LICENSED PROFESSIONAL
Education and examination requirements; 201 KAR 36:070
Experience under supervision; qualification; 201 KAR 36:060
Inactive and retired licensure; 201 KAR 36:080

CRIMINAL JUSTICE TRAINING; OFFICE OF
General Training Provision
Certified Court Security Officers Academy trainee requirements; 503 KAR 3:110
Definitions; 503 KAR 3:005
Recruit conduct requirements; 503 KAR 3:010
Telecommunications Academy trainee requirements; 503 KAR 3:040
Kentucky Law Enforcement Council *(See Kentucky Law Enforcement Council)* 503 KAR Chapter 1

DENTISTRY, BOARD OF
Anesthesia and sedation; 201 KAR 8:550

DIABETES EDUCATORS, BOARD OF LICENSED
Application procedures; 201 KAR 45:170
Education courses; 201 KAR 45:180
Renewal, reinstatement, and inactive status; 201 KAR 45:120
Supervision and work experience; 201 KAR 45:110

EDUCATION AND WORKFORCE DEVELOPMENT CABINET
Commission on Proprietary Education *(See Kentucky Commission on Proprietary Education)* KAR Title 791
Education; Kentucky Board of
Assessment and Accountability
Intervention options in priority schools and districts; 703 KAR 5:260
Repeal of 703 KAR 5:120 and 5:180; 703 KAR 5:122
General Administration
School health services; 702 KAR 1:160
Instructional Programs
Energy Technology Engineering Career Pathway; 705 KAR 4:250
Office of Instruction
Professional growth and effectiveness system; 704 KAR 3:370
School Administration and Finance
Finance officer certification requirements; 702 KAR 3:320
School Terms, Attendance and Operation
Calendar; 702 KAR 7:140
Designation of agent to manage middle and high school interscholastic athletics; 702 KAR 7:065

EDUCATION PROFESSIONAL STANDARDS BOARD
Assessment
Examination prerequisites for teacher certification; 16 KAR 6:010
Educator Preparation
Literacy Program Requirements Certification Programs; 16 KAR 5:060
Teaching Certificates
Emergency certification and out-of-field teaching; 16 KAR 2:120
Kentucky teaching certificates; 16 KAR 2:010
University-based Alternative Certification Program
Program; 16 KAR 9:080

ELECTIONS, STATE BOARD OF
Forms and Procedures
Absentee ballots via facsimile or electronically; 31 KAR 4:130
Federal postcard application via email; 31 KAR 4:140
Statewide Voter Registration
Overseas voter without a recognized residential address; 31 KAR 3:030
Voting
Federal write-in absentee ballot; 31 KAR 5:010

EMBALMERS AND FUNERAL DIRECTORS, BOARD
Board members; per diem compensation; 201 KAR 15:015

ENERGY ENVIRONMENT CABINET
Public Service Commission *(See Public Service Commission) KAR Title 807*

FINANCE AND ADMINISTRATION CABINET
Commonwealth Office of Technology
Data breach notification forms; 200 KAR 1:015
Fleet Management
Motor pool procedure; 200 KAR 40:010
Purchase, use, lease, maintenance, and disposal of state-owned motor vehicles; 200 KAR 40:020
Revenue; Department of *(See Revenue, Department of)*
School Facilities Construction Commission
Emergency and targeted Investment Fund; 750 KAR 1:030

FISH AND WILDLIFE RESOURCES, DEPARTMENT OF
Fish
Asian Carp and Scaled Rough Fish Harvest Program; 301 KAR 1:152
Boat and motor restrictions; 301 KAR 1:015
Nontraditional fishing methods; 301 KAR 1:410
Reciprocal agreements; 301 KAR 1:220
Game
Black bears; 301 KAR 2:300
Deer hunting on Wildlife Management Areas, state parks, other public lands, and federally controlled areas; 301 KAR 2:178
Dove, wood duck, teal, other migratory game bird hunting; 301 KAR 2:225
Furbearers; season, limits; 301 KAR 2:251
Small game and furbearer hunting and trapping on public areas; 301 KAR 2:049
Waterfowl hunting requirements; public lands; 301 KAR 2:222
Waterfowl seasons and limits; 301 KAR 2:221
Wild turkey hunting; requirements; 301 KAR 2:140
Wild turkey hunting; fall; 301 KAR 2:144

GENERAL GOVERNMENT CABINET
Accountancy *(See Accountancy, State Board of)* 201 KAR Chapter 1
Barbering *(See Barbering, Board of)* 201 KAR Chapter 14
Dentistry *(See Dentistry, Board of)* 201 KAR Chapter 8
Diabetes Educators *(See Diabetes Educators; Board of Licensed)* 201 KAR Chapter 45
Dietitians and Nutritionists, Board of Licensure and Certification for Fees; 201 KAR 33:010
Marriage and Family Therapists, Board of Licensure for Supervision of therapist associates; 201 KAR 32:035
Nursing *(See Nursing, Board of)* 201 KAR Chapter 21
Occupational Therapy, Board of Licensure for (See Occupational Therapy, Board of) 201 KAR Chapter 28
Optometric Examiners, Board of
Telehealth; 201 KAR 5:055
Physical Therapy *(See Physical Therapy, Board of)* 201 KAR Chapter 22
Professional Art Therapists, Board of Licensure *(See Professional Art Therapists, Board of Licensure) 201 KAR Chapter 34*
Professional Engineers and Land Surveyors *(See Professional Engineers and Land Surveyors Board of Licensure for)* 201 KAR Chapter 18
Professional Geologists *(See Professional Geologists, Board of Registration for)* 201 KAR Chapter 31
Real Estate Appraisers *(See Real Estate Appraisers Board)* 201 KAR Chapter 30
Social Work *(See Social Work, Board of)* 201 KAR Chapter 23
Veteran's Affairs, Department of
Kentucky Veterans' Program Trust fund; 201 KAR 37:010

HEALTH AND FAMILY SERVICES, CABINET FOR
Aging and Independent Living, Department of
Aging Services
Homecare program for the elderly; 910 KAR 1:180
Brain Injury
Trust fund operations; 910 KAR 3:030
Guardianship
Adult guardianship, service provisions for; 910 KAR 2:040
Behavioral Health, Developmental and Intellectual Disabilities
Institutional Care
"Means test" for determining patient liability; 908 KAR 3:060
Per diem rates; 908 KAR 3:050
Community Based Services *(See Community Based Services; Department for)* KAR Title 921
Certificate of Need
Annual surveys; 900 KAR 6:125
Application
Process; 900 KAR 6:065
Timetable for submission; 900 KAR 6:060
Expenditure minimums; 900 KAR 6:030
Health Benefit Exchange
Eligibility and enrollment in a qualified health plan; 900 KAR 10:030
Inspector General, Office
Health Care Division
Facilities; behavioral health service organizations; 902 KAR 20:430
Facilities; residential crisis stabilization units; 902 KAR 20:440
Medicaid Services *(See Medicaid Services, Department for)* KAR Title 907
Public Health *(See Public Health, Department for)* KAR Title 902
Special Healthcare Needs Services; Children with
Early Hearing Detection and Intervention Program; 911 KAR 1:085
Vital Statistics
Kentucky Electronic Death Registration System; 901 KAR 5:025

HEATING, VENTILATION & AIR CONDITIONING, DIVISION OF
Continuing education courses and providers; approval requirements; 815 KAR 8:060
Fees and refunds; 815 KAR 8:090
Installation permits; 815 KAR 8:070
Journeyman HVAC mechanic licensing requirements; 815 KAR 8:020
Master HVAC contractor licensing requirements; 815 KAR 8:010

HIGHER EDUCATION ASSISTANCE AUTHORITY
Authority
Student aid applications; 11 KAR 4:080
Coal County College Completion Program
Application and certification; 11 KAR 20:020
Award determination procedure; 11 KAR 20:030
Definitions; 11 KAR 20:001
Disbursement; 11 KAR 20:040
Dual enrollment under consortium agreement; 11 KAR 20:070
Records and reports; 11 KAR 20:060
Refunds and repayment; 11 KAR 20:050
Student eligibility requirement; 11 KAR 20:010
Coal County Scholarship Program for Pharmacy Students
Scholarship; 11 KAR 19:010
Commonwealth Merit Scholarship Program
KEES overpayment and refund procedure; 11 KAR 15:060
KEES program; 11 KAR 15:090
Early Childhood Development Scholarship Program
Applicant selection process; 11 KAR 16:010
Definitions; 11 KAR 16:001
Grant Program
CAP grant student eligibility; 11 KAR 5:034
Definitions; 11 KAR 5:001
KTG student eligibility requirements; 11 KAR 5:033
Refund, repayment policy; 11 KAR 5:170
Kentucky Loan Program
Administrative wage garnishment; 11 KAR 3:100
Teacher Scholarship Loan Program
Teacher scholarships; 11 KAR 8:030

HOME INSPECTORS, BOARD OF
Conduct standards; 815 KAR 6:030
Compensation; 815 KAR 6:100
Complaints and administrative hearings; 815 KAR 6:090
Continuing education provider; 815 KAR 6:080
Definitions; 815 KAR 6:001
Licensing requirements and records maintenance; 815 KAR 6:010
Prelicensing providers; 815 KAR 6:040

HORSE RACING COMMISSION
Harness Racing
Disciplinary measures and penalties; 811 KAR 1:095
Quarter Horse, Appaloosa and Arabian Racing
Disciplinary measures and penalties; 811 KAR 2:100
Entries, subscriptions, and declarations; 811 KAR 2:027
Objections and complaints; 811 KAR 2:090
Thoroughbred Racing
Disciplinary measures and penalties; 810 KAR 1:028
Entries, subscriptions, and declarations; 810 KAR 1:027
Objections and complaints; 810 KAR 1:017

HOUSING, BUILDINGS AND CONSTRUCTION; DEPARTMENT OF
Building Code
Kentucky Building Code; 815 KAR 7:120
Heating, Ventilation and Air Conditioning *(See Heating, Ventilation and Air Conditioning, Division of)* 815 KAR Chapter 8
Plumbing *(See Plumbing, Division of)* 815 KAR Chapter 20

INSURANCE, DEPARTMENT OF
Assets and Liabilities
Valuation of life insurance; annuity reserves; 806 KAR 6:070
Fraud
Designation of contact person; 806 KAR 47:010
Insurance Holding Company Systems
Systems; 806 KAR 37:010
Premium Finance Companies
Minimum service charge abuse; 806 KAR 30:020

JUSTICE AND PUBLIC SAFETY CABINET
Corrections *(See Corrections, Department of)* KAR Title 501
Criminal Justice Training *(See Criminal Justice Training; Office of)* KAR Title 503
Kentucky Law Enforcement Council *(See Kentucky Law Enforcement Council)* 503 KAR Chapter 1
Office of the Secretary
Repeal of 500 KAR Chapter 4; 500 KAR 4:011

LABOR CABINET
Apprenticeship programs; 803 KAR 1:010

LAW ENFORCEMENT COUNCIL
Basic training, graduation requirements; 503 KAR 3:120
Course curriculum approval; 503 KAR 1:090
Definitions; 503 KAR 1:060
Instructor certification; 503 KAR 1:100
Professional development in-service training, graduation requirements, recognized courses, and records; 503 KAR 1:120
Repeal of 503 KAR 1:110; 503 KAR 1:111
Schools, certification; 503 KAR 1:080
Training, qualifications; application; 503 KAR 1:070

MEDICAID SERVICES, DEPARTMENT FOR
Behavioral Health
Behavioral health service organizations, coverage; 907 KAR 15:020
Behavioral health service organizations; reimbursement; 907 KAR 15:025
Definitions; 907 KAR 15:005
Mental health or substance use disorder, co-occurring; coverage; 907 KAR 15:050
Mental health or substance use disorder, co-occurring; reimbursement; 907 KAR 15:055
Residential crisis stabilization units, coverage; 907 KAR 15:070
Residential crisis stabilization units, reimbursement; 907 KAR 15:075
Severe mental illness or emotional disability; coverage; 907 KAR 15:060
Severe mental illness or emotional disability; reimbursement; 907 KAR 15:065
Substance use disorder, coverage; 907 KAR 15:040
Substance use disorder, reimbursement; 907 KAR 15:045
Payments and Services
Coverage of physicians' services; 907 KAR 3:005
Repeal of 907 KAR 3:110; 907 KAR 3:111
Repeal of 907 KAR 1:515, 520, 525, 530, 550, 555; 907 KAR 1:516E
Veterans' Affairs Nursing Facilities
Definitions; 907 KAR 18:001
Reimbursement for Veterans Affairs nursing facility services; 907 KAR 18:005

MEDICAL LICENSURE; BOARD OF
Acupuncturists fee schedule; 201 KAR 9:450
Athletic trainers, continued licensure; 201 KAR 9:305
Athletic trainers, fee schedule; 201 KAR 9:307
Continuing medical education; 201 KAR 9:310
Professional standards for prescribing or dispensing Buprenorphine-Mono-Product or Buprenorphine-Combined-with-Naloxone; 201 KAR 9:270
Written plan; 201 KAR 9:460

NATURAL RESOURCES, DEPARTMENT OF
Permits
Surface coal mining permits; 405 KAR 8:030
Underground coal mining permits; 405 KAR 8:040
Reclamation Guaranty Fund, Office
Performance bond subsidy, extension; 405 KAR 10:025

NURSING, BOARD OF
Advanced practice registered nurse licensure and certification requirements; 201 KAR 20:056
Alternative program; 201 KAR 20:450
Applications for licensure; 201 KAR 20:370
Continuing education provider approval; 201 KAR 20:220
Evaluation of prelicensure registered nurse and practical nurse programs; 201 KAR 20:360
Fees for applications and services; 201 KAR 20:240
Investigation and disposition of complaints; 201 KAR 20:161
Scope and standards of practice of APRNs; 201 KAR 20:057
Sexual Assault Nurse Examiner Program standards and credential requirements; 201 KAR 20:411

OCCUPATIONAL THERAPY, BOARD OF LICENSURE FOR
Board members, per diem; 201 KAR 28:220
Competence, continuing; 201 KAR 28:200
Deep physical agent modalities; 201 KAR 28:170
Definitions; 201 KAR 28:010
Ethics; 201 KAR 28:140
Examination; 201 KAR 28:070
Fees; 201 KAR 28:110
General provisions; 201 KAR 28:020
Licensure requirements; 201 KAR 28:060
Permits, temporary; 201 KAR 28:180
Renewals; 201 KAR 28:090
Short-term practice under KRS 319A.090(1)(e); 201 KAR 28:030
Supervision of assistants, aides, students, temporary permit holders; 201 KAR 28:130

PERSONNEL CABINET
Classified
2015 Plan Year Handbook For public Health Insurance Program; 101 KAR 2:210

PHARMACY, BOARD OF
Interns; registration; 201 KAR 2:040
License transfer; 201 KAR 2:030

PHYSICAL THERAPY, BOARD OF
Renewal, reinstatement of physical therapist or physical therapist assistant; 201 KAR 22:040
Telehealth and telephysical therapy; 201 KAR 22:160

PLUMBING, DIVISION OF
Fees and refunds; 815 KAR 20:015
Fixtures; 815 KAR 20:070
House sewers, storm water piping; installation; 815 KAR 20:130
Installation permits; 815 KAR 20:050
Licensing and examination requirements; 815 KAR 20:030
Materials; quality and weight of; 815 KAR 20:060
Medical gas piping installations; 815 KAR 20:195
Minimum fixture requirements; 815 KAR 20:191
Soil, waste, and vent systems; 815 KAR 20:090
Vehicle identification; 815 KAR 20:040

PROFESSIONAL ENGINEERS AND LAND SURVEYORS, BOARD OF LICENSURE FOR
Continuing professional development for professional land

surveyors; 201 KAR 18:192

PROFESSIONAL GEOLOGISTS; BOARD OF REGISTRATION FOR
Administrative subpoena; 201 KAR 31:100

PROPRIETARY EDUCATION, COMMISSION ON
Applications, permits and renewals; 791 KAR 1:010
Commercial driver license training school instructor application; 791 KAR 1:070
Commercial driver license training school license application; 791 KAR 1:050
Commercial driver license training school license application renewal; 791 KAR 1:060
Fees; 791 KAR 1:025
Hearing procedures; 791 KAR 1:030
Licensure standards; 791 KAR 1:020
Repeal of 791 KAR 1:090; 791 KAR 1:091
Student protection fund; 791 KAR 1:035

PROSTHETICS, ORTHOTICS, AND PEDORTHICS, BOARD
Licensure requirements; 201 KAR 44:090
Licensure by endorsement; 201 KAR 44:110
Post residency registration; 201 KAR 44:120

PUBLIC HEALTH, DEPARTMENT FOR
Communicable Diseases
Immunization data reporting and exchange; 902 KAR 2:055
Reportable Disease Surveillance; 902 KAR 2:020
Health Services and Facilities
Behavioral health services organizations; specifications; 902 KAR 20:430
License procedures and fee schedules; 902 KAR 20:008
Residential crisis stabilization units; facility specifications; 902 KAR 20:440
Maternal and Child Health
Newborn screening program; 902 KAR 4:030
Programs for the Underserved
Physicians Care Program, eligibility; 902 KAR 21:010
Radiology
Decommissioning and financial surety; 902 KAR 100:042
Definitions; 902 KAR 100:010
Fee schedule; 902 KAR 100:012
Industrial radiography; 902 KAR 100:100
Licenses to manufacture, assemble, repair, distribute products; 902 KAR 100:058
Protection standards; 902 KAR 100:019
Radionuclides in the health arts; 902 KAR 100:072
Transportation of radioactive material; 902 KAR 100:070
Wire line services operations; 902 KAR 100:142
Radon
Radon Contractor Certification Program; 902 KAR 95:040

PUBLIC PROTECTION CABINET
Home Inspectors *(See Home Inspectors, Board of)* 815 KAR Chapter 6
Housing, Buildings and Construction *(See Housing, Buildings and Construction; Department of) KAR Title 815*
Plumbing *(See Plumbing, Division of)* 815 KAR Chapter 20
Insurance *(See Insurance, Department of)* KAR Title 806

PUBLIC SERVICE COMMISSION
Utilities
Alternative rate adjustment procedure for small utilities; 807 KAR 5:076
Applications for certificate of public convenience and necessity for certain electric transmission lines; 807 KAR 5:120
Board proceedings; 807 KAR 5:110
Filing requirements and procedures for federally funded construction project of a water association, a water district, or a combined water, gas, or sewer district; 807 KAR 5:069
Purchased water adjustment for water districts and water associations; 807 KAR 5:068
Rules of procedure; 807 KAR 5:001
Tariffs; 807 KAR 5:011
Treated sewage adjustment for water districts and water accessories; 807 KAR 5:075

REAL ESTATE APPRAISERS BOARD
Continuing education; 201 KAR 30:125
Distance education standards; 201 KAR 30:180
Reciprocity; 201 KAR 30:200

RETIREMENT SYSTEMS
Repeal of 105 KAR 1:290 and 105 KAR 1:360; 105 KAR 1:291
Trust fund; Health insurance; 105 KAR 1:410

REVENUE, DEPARTMENT OF
Income Tax; General Administration
Kentucky new markets development program tax credit; 103 KAR 15:180
Selective Excise Tax: Motor Vehicle Usage
Measurement of Compressed Natural Gas (CNG) and liquefied natural gas (LNG) in gallons; 103 KAR 43:330

SCHOOL FACILITIES CONSTRUCTION COMMISSION
(See Finance and Administration Cabinet)

SECRETARY OF STATE
Address Confidentiality Program
Kentucky Address Confidentiality Program; 30 KAR 6:010

SOCIAL WORK, BOARD OF
Temporary permission to practice; 201 KAR 23:015

TOURISM, ARTS AND HERITAGE CABINET
Fish and Wildlife Resources; Kentucky Department of *(See Fish and Wildlife Resources; Kentucky Department of) KAR Title 301*
Heritage Council
Historic rehabilitation tax credit certifications; 300 KAR 6:010

TRANSPORTATION CABINET
Department of Vehicle Regulation
Driver Licensing, Division
CDL restrictions and endorsements; 601 KAR 11:030
Motor Carriers
Transportation network company; 601 KAR 1:112

VETERINARIAN, STATE OFFICE OF
Chronic wasting disease, surveillance in farmed cervids; 302 KAR 20:066

WATER, DIVISION OF
Drinking Water (Public Water Supply)
Bottled water; 401 KAR 8:700
Lead and copper; 401 KAR 8:300
Microbiological monitoring; 401 KAR 8:200